THIS DRAWING IS UNPUBLISHED. RELEASED FOR PUBLICATION -,- .
© COPYRIGHT - By - ALL RIGHTS RESERVED.

LOC	DIST
G	14

REVISIONS

P	LTR	DESCRIPTION	DATE	DWN	APVD
	E3	REVISED PER ECO-12-007718	04MAY12	KH	DR

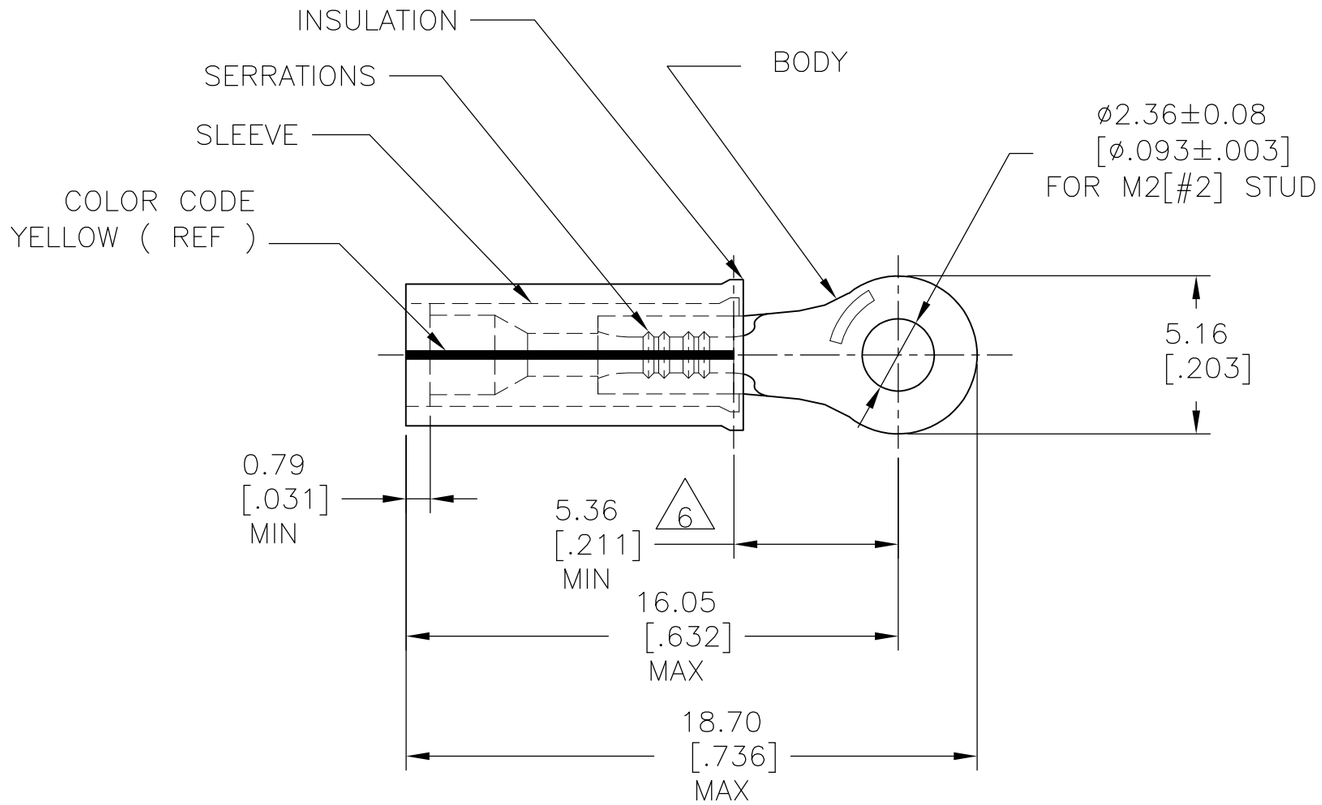

1 MUST BE CRIMPED WITH A 22-18 OR 22-16 P.I.D.G. (RED) TOOL.

2 WIRE INSULATION DIA: 0.81-2.08 [.032-.082].

3 TONGUE MATERIAL THK: 0.69±0.05 [.027±.002].

4 BODY & SLEEVE: TIN/LEAD (93-7) PLATE PER ASTM B545. (3% MIN LEAD CONTENT).

5 MATERIAL: BODY & SLEEVE- CU PER ASTM B152
INSULATION - PVF2, COLOR - NATURAL.

6 DIMENSION APPLIES FROM EDGE OF METAL WIRE BARREL TO CENTER OF STUD HOLE.

MILITARY	QTY	PACKAGE TYPE	PART NO.
M7928/4-143, CLASS 1 & 2 M7928/13-143, CLASS 1 & 2	1000	LOOSE PIECE	53400-1

AMP INCORPORATED
CUSTOMER SERVICE SYSTEMS

FOR ADDITIONAL PRODUCT INFORMATION OR COPIES OF DRAWINGS AND TECHNICAL DOCUMENTS	PRODUCT INFORMATION CENTER 1-800-522-6752
FOR APPLICATION TOOLING INFORMATION	TOOLING ASSISTANCE CENTER 1-800-722-1111
FOR ORDER ENTRY	1-800-526-5142

THIS DRAWING IS A CONTROLLED DOCUMENT FOR AMP INCORPORATED. IT IS SUBJECT TO CHANGE AND THE CONTROLLING ENGINEERING ORGANIZATION SHOULD BE CONTACTED FOR THE LATEST REVISION.

MAX RECOMMENDED OPERATING TEMPERATURE: 150°C [302°F] MAX

VOLTAGE RATING: N/A

CIRCULAR MIL AREA: 0.10-0.26mm² [202-509] STRANDED

THIS DRAWING IS A CONTROLLED DOCUMENT.

DIMENSIONS: mm [INCHES]

TOLERANCES UNLESS OTHERWISE SPECIFIED:

0 PLC	± -
1 PLC	± -
2 PLC	± 0.20[.008]
3 PLC	± -
4 PLC	± -
ANGLES	± -

MATERIAL - 4

FINISH - 5

DWN	JR RUTH	23MAY05
CHK	T MICHIELUTTI	23MAY05
APVD	T MICHIELUTTI	23MAY05
PRODUCT SPEC	—	
APPLICATION SPEC	NOT AVAILABLE	
WEIGHT	—	

TE Connectivity

NAME: TERMINAL, RING TONGUE, PVF2 , PIDG
WIRE SIZE: 26-24 AWG

SIZE	CAGE CODE	DRAWING NO	RESTRICTED TO
A3	00779	C-53400	—

CUSTOMER DRAWING | SCALE 5:1 | SHEET 1 OF 1 | REV E3

1470-19 (3/11)