Series 1590BBFL (Flanged Lid)

Top View of Assembly

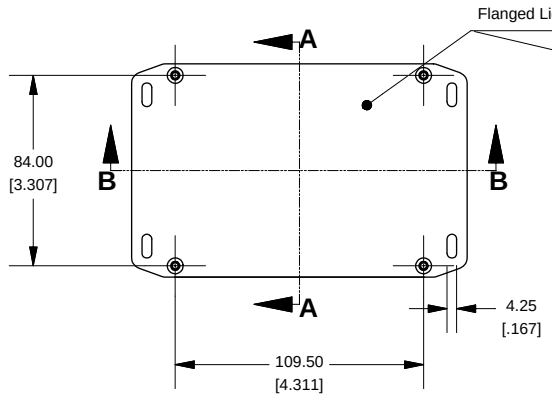

SECTION A-A
End View of Assembly

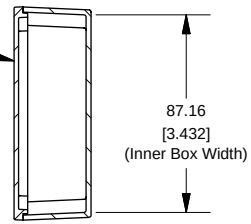

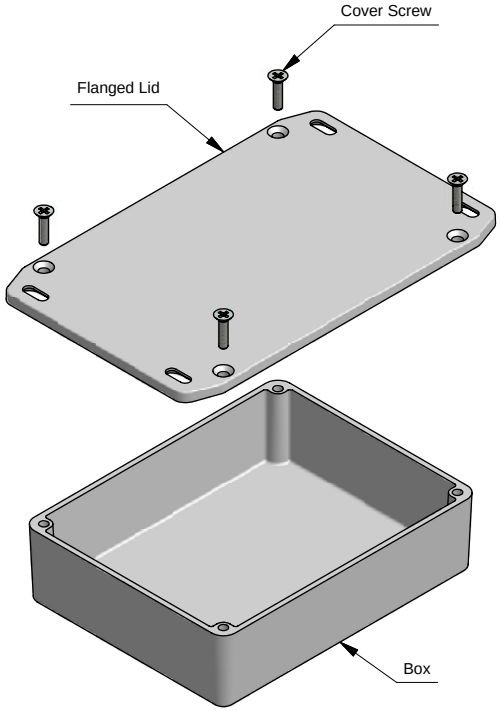

SECTION B-B
Side View of Assembly

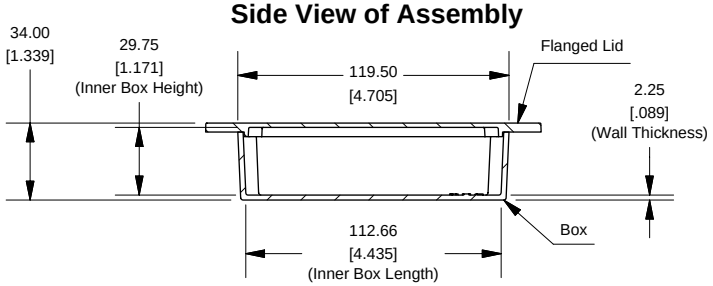

Top View Looking Inside Box

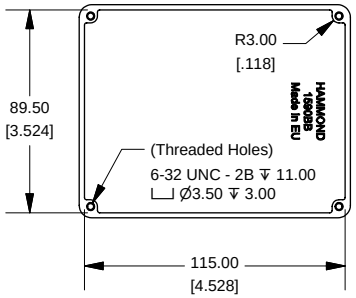

Flanged Lid

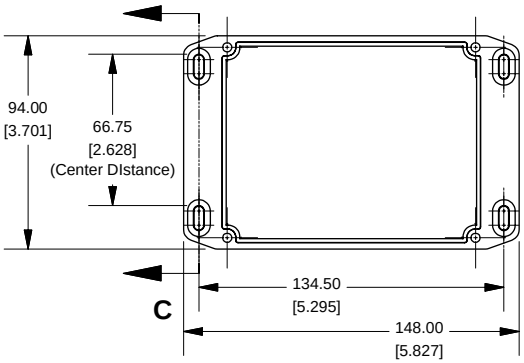

SECTION C-C
Side of Slot

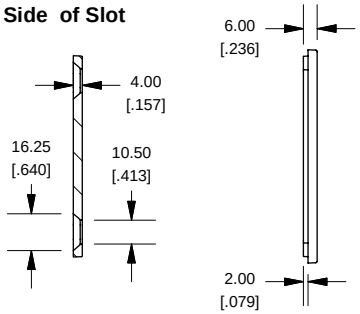

NOTE
Purchased assembly includes box, lid and 4 cover screws. Box and lid are made from Diecast Aluminum Alloy (alloy type 360.1).

PART NUMBERS	
1590BBFL Enclosure	
Unfinished	1590BBFL
Black Textured Powder Paint	1590BBFLBK
1590BBFL Liquid Resistant Enclosure (Silicon Factory Installed Gasket)	
Unfinished	1590WBBFL
Black Textured Powder Paint	1590WBBFLBK
ACCESSORIES	
Unfinished	
Cover Screws (Pkg 100) **[6-32 x 1/2" Nickel Plated Screws]**	1590MS100
Black Textured Powder Paint	
Cover Screws (Pkg 50) **[6-32 x 1/2" Stainless Steel Black Screws]**	1590MS50BK

HAMMOND MANUFACTURING™

www.hammondmfg.com