REV.	DATE	DESCRIPTION
A	12/09/03	UPDATE DRAWING FORMAT
B	01/18/06	MODIFY BACK END OF BODY/BARREL
C	08/30/06	ADD REAR BODY PLATING TO GOLD

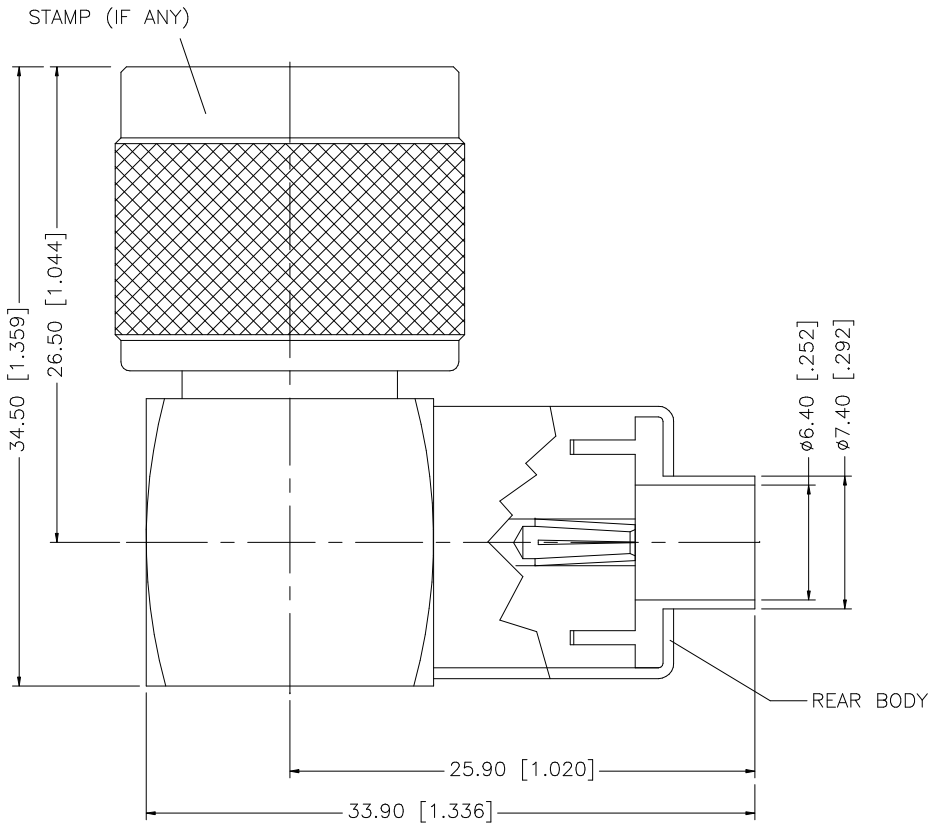

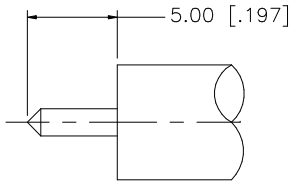

RECOMMENDED CABLE
STRIPPING DIM'S

	DESCRIPTION	MATERIAL	FINISH	QTY
8				
7				
6				
5				
4	INSULATOR	TEFLON	NATURAL	1
3	CONTACT PIN	PHOS. BRONZE	GOLD	1
2	REAR BODY	BRASS	GOLD	1
1	BODY	BRASS	NEXCOTE	1

UNLESS OTHERWISE SPECIFIED DIMENSIONS ARE IN MILLIMETERS. DIMENSIONS IN [ ] ARE IN INCHES AND FOR CUSTOMER REFERANCE ONLY.

UNLESS OTHERWISE SPECIFIED TOLERANCES FOR MILLIMETERS ARE:
0.5 – 8mm ± 0.20mm
8 – 30mm ± 0.40mm
30 – 120mm ± 0.50mm

UNLESS OTHERWISE SPECIFIED TOLERANCES FOR INCHES ARE:
.020 – .315 = ± 0.007"
.315 – 1.180 = ± 0.015"
1.180 – 4.724 = ± 0.020"

DO NOT SCALE DRAWING

APPROVALS		DATE
DRAWN	G.R.S.	08/30/06
CHECKED		
ISSUED		
SHEET	1 OF 1	
CAD FILE	C:/172/172266.DWG	

Amphenol Connex

PART DESCRIPTION: N R/A DIRECT SOLDER PLUG (FOR .250 SEMI RIGID CABLE)

PART NO. 172266

DWG. NO.	REV.	SIZE	SCALE
172266.DWG	C	A	NA