THIS DRAWING IS UNPUBLISHED. RELEASED FOR PUBLICATION -,- .
© COPYRIGHT - BY TYCO ELECTRONICS CORPORATION. ALL RIGHTS RESERVED.

LOC	DIST
AA	22

REVISIONS

P	LTR	DESCRIPTION	DATE	DWN	APVD
	A	ECOS11-0201-04	08JUNE2005	LAM	SF

1 MATERIAL:
HOUSING - HIGH TEMPERATURE THERMOPLASTIC, BLACK, UL94V-0; IR REFLOW SOLDERING PROCESS COMPATIBLE.
TERMINALS - .36[.014] THICK PHOS BRONZE PLATED WITH 3.81µm[.000150] MINIMUM THICK MATTE TIN IN SOLDER AREA. 1.27 µm [.000050] MINIMUM GOLD IN LOCALIZED PLATE AREA. ENTIRE TERMINAL PLATED WITH 1.27µm [.000050] MINIMUM THICK NICKEL.

2. JACK CAVITY CONFORMS TO FCC RULES AND REGULATIIONS PART 68, SUBPART F.

3 SUGGESTED PANEL OPENING DIMENSIONS.

4 SUGGESTED CLEARANCE BETWEEN BOTTOM OF CONNECTOR AND BOTTOM PANEL OPENING.

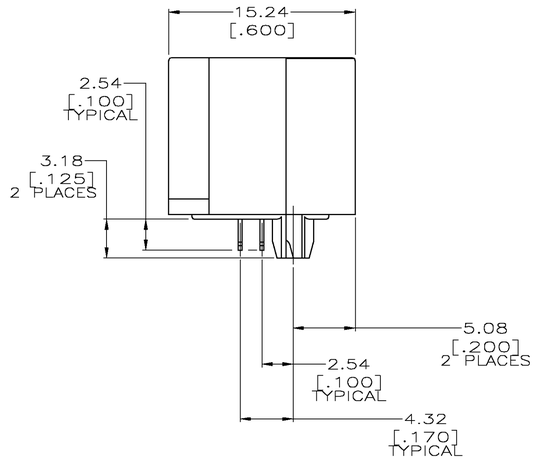

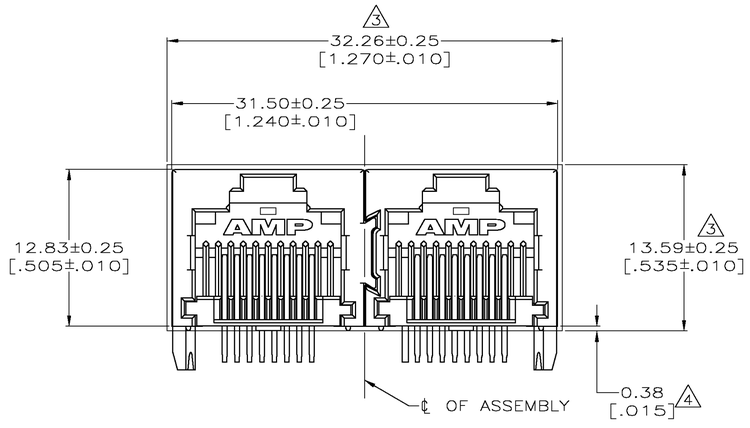

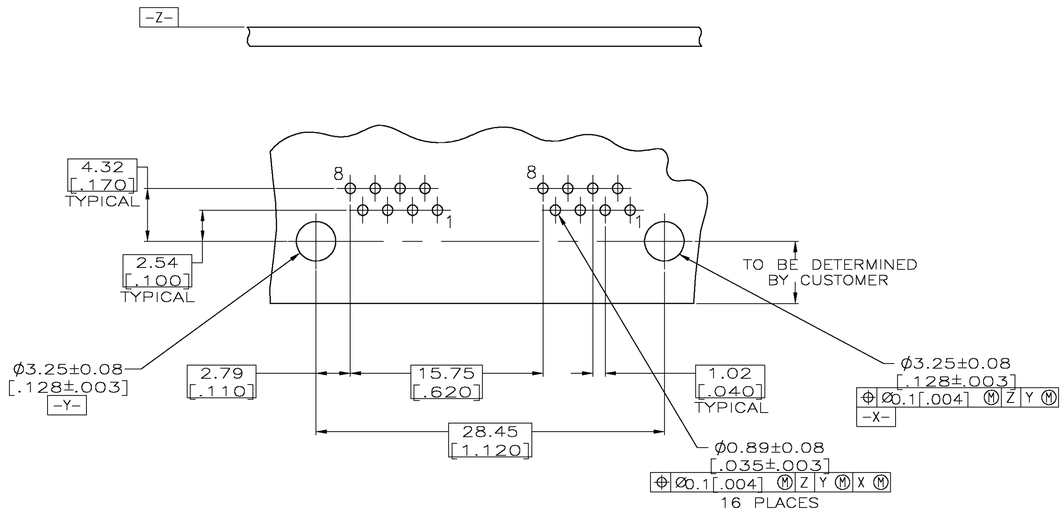

SUGGESTED PRINTED CIRCUIT BOARD LAYOUT
(COMPONENT SIDE)

5406526-1
PART NUMBER

THIS DRAWING IS A CONTROLLED DOCUMENT.

DIMENSIONS: mm

TOLERANCES UNLESS OTHERWISE SPECIFIED:
0 PLC ± -
1 PLC ± -
2 PLC ± -
3 PLC ± -
4 PLC ± -
ANGLES ± -

MATERIAL: SEE NOTE 1
FINISH: SEE NOTE 1

DWN T. WOOTEN/L.A.MAYER 08JUNE2005
CHK J.WESTMAN 08JUNE2005
APVD S.FLICKINGER 08JUNE2005
PRODUCT SPEC 108-1163-4
APPLICATION SPEC 114-2154
WEIGHT -

Tyco Electronics Corporation
Harrisburg, Pa 17105-3608

NAME: INVERTED MOD JACK ASSEMBLY, 1x2
-
-

SIZE	CAGE CODE	DRAWING NO	RESTRICTED TO
A1	00779	C-5406526	-

CUSTOMER DRAWING | SCALE 4:1 | SHEET 1 OF 1 | REV A