THIS DRAWING IS UNPUBLISHED. RELEASED FOR PUBLICATION .1997
© COPYRIGHT 1997 BY TYCO ELECTRONICS CORPORATION. ALL RIGHTS RESERVED.

LOC	DIST
A1	–

REVISIONS

P	LTR	DESCRIPTION	DATE	DWN	APVD
	A1B	Released as per ECR-08-021856	29.Aug.2008	SP	TS

PN 0-2.0-3.0-8 & 1-2

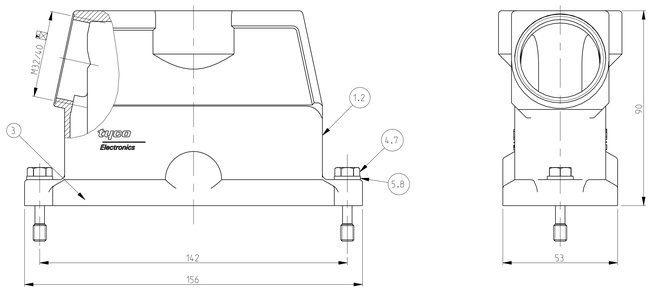

PN 0-9.1-0.1-1.1-4 & 1-8

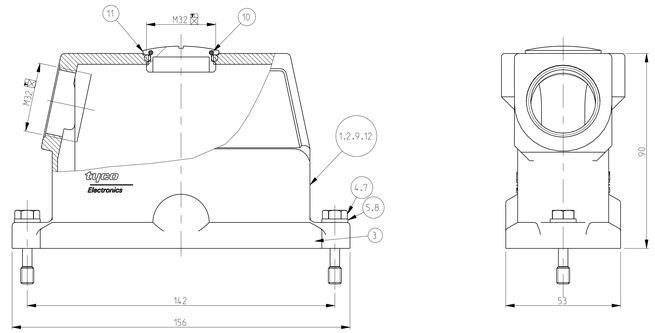

PN 0-7

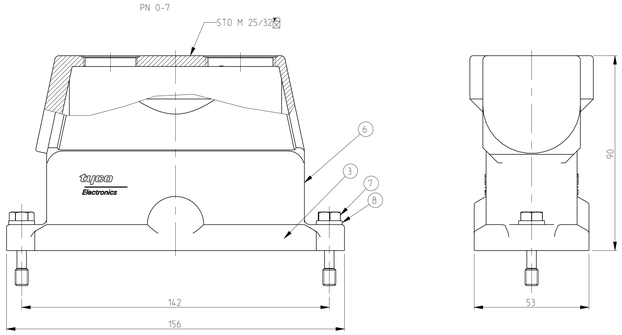

PN 0-1.0-4.0-5.0-6.1-3 & 1-6

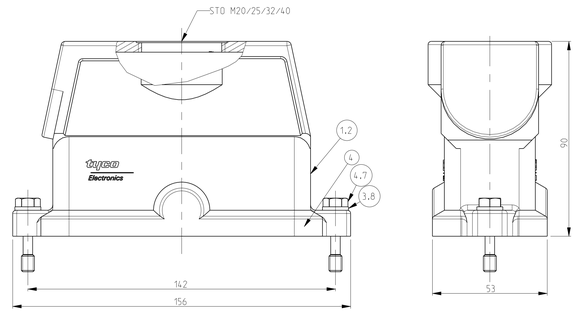

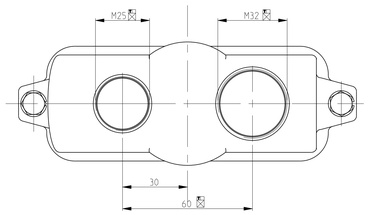

PN 1-5 & 1-7 (Neutral)

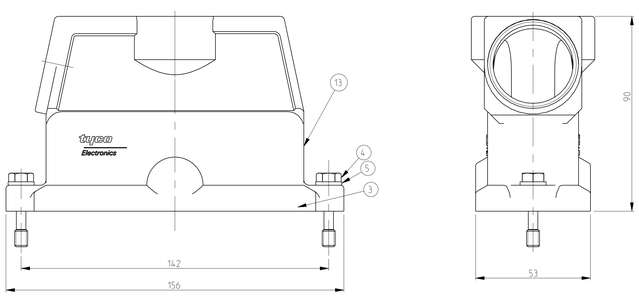

NOTES.

1. Material:Housing:Aluminium Diecasting Alloy
   Seals:Neoprene conductivity
2. Surface:Varnish grey
   -ChromitAL TCP passivation +Varnish Black
3. Packaging
   Quantity 5 Pieces in a box
4. Special Packaging
   Quantity 25 Pieces in a box
5. Varnish on the inside not necessarily

PN 0-1.0-4.0-5.0-6.1-3 & 1-6

SCALE 1:2

PN 1-2
With Weidmuller logo

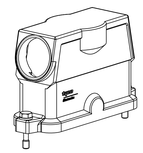

SCALE 1:2

PN 0-2.0-3.0-8 & 1-2

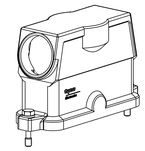

SCALE 1:2

PN 0-7

SCALE 1:2

PN 0-9.1-0.1-1.1-4 & 1-8

SCALE 1:2

PN 1-7.1-5 (Neutral)
Without logo

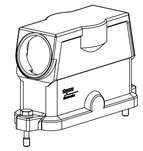

SCALE 1:2

1-8	1-7	1-6	1-5	1-4	1-3	1-2	1-1	1-0	0-9	0-8	0-7	0-6	0-5	0-4	0-3	0-2	0-1	DESCRIPTION	MATERIAL	SURFACE	COLOR	ITEM NO	REMARKS
	1		1															Hood size 8 finished product	1 Aluminium	2 SUR TEC 650	Black RAL9005	13	
				1														Hood size 8 finished product	Aluminium		Without varnish	12	
							1											Blanking Piece	Brass	Nickel plated	Blue	11	
							1											O-Ring	Neoprene		Black	10	
1							1											Hood size 8 finished product	Aluminium		White Aluminium	9	
		2						2	2	2	2							Washer, Plain	Stainless steel	Blank		8	B6.4
		2						2	2	2	2							Screw, Hexagon Bolt	Stainless steel	Blank		7	M6x30
											1							Hood size 8 finished product	Aluminium	SUR TEC 650	Black RAL9005	6	
2	2		2	2	2	2	2					2	2	2	2	2	2	Washer, Plain	Stainless steel	Blank		5	B6.4
2	2		2	2	2	2	2					2	2	2	2	2	2	Screw, Hexagon Bolt	Stainless steel	Blank		4	M6x30
1	1	1	1	1	1	1	1	1	1	1	1	1	1	1	1	1	1	Seal	Neoprene		Black	3	Conductivity
		1			1	1			1	1	1			1	1			Hood size 8 finished product	Aluminium	SUR TEC 650	Black RAL9005	2	
								1					1	1		1	1	Hood size 8 finished product	Aluminium		Grey RAL7001	1	

EMV.24/64.STO.1.M40.G 1
EMV.24/64.STS.1.M40.G 1
EMV-K.24/64.STS.1.M40.G 1
EMV-K.24/64.STO.1.M40.G 1
EMV.24/64.STO.1.M20.G 1
EMV.24/64.STO.1.M25.G 1
EMV-K.24/64.STO.1.M25.G+1.M32.G 1
EMV-K.24/64.STS.1.M32.G 1
EMV-K.24/64.STO.1.M32.G+STS.1.M32.G 1
EMV.24/64.STO.1.M32.G+STS.1.M32.G 1
EMV.24/64.STO.1.M32.BS+STS.1.M32.G 1
EMV-K.24/64.STS.1.M40.G-WE 1
EMV-K.24/64.STO.1.M25.G 1
EMV.24/64.STO.1.M32.G+STS.1.M32.G 1
EMV-K.24/64.ST 1
EMV-K.24/64.STO.1.M32.G 1
EMV-K.24/64.STS.1.M40.G-Netural 1
EMV.24/64.STO.1.M32.G+STS.1.M32.G 1

TYCO ELECTRONICS CONFIDENTIAL DOCUMENT FOR TYCO ELECTRONICS CORPORATION (T.E.C.) USE ONLY. THIS DOCUMENT MAY NOT BE COPIED OR DISTRIBUTED TO ANY ORGANIZATION OTHER THAN TYCO ELECTRONICS CORPORATION.

DWN Schneider 01.08.2000
CHK Schneider 01.08.2000
APVD

Tyco Electronics
Tyco Electronics, AMP,GmbH
D-53757 Sankt Augustin, Germany

DIMENSIONS: mm

TOLERANCES UNLESS OTHERWISE SPECIFIED:
FOR DRAWING USE ONLY
0 PLC ±
1 PLC ±
2 PLC ±
3 PLC ±
4 PLC ±
ANGLES ±
FINISH

MATERIAL

PRODUCT SPEC
APPLICATION SPEC
WEIGHT 540 g

NAME
Hood
EMV.24/64.Sto/Sts with M-Thread

SIZE A0 | CAGE CODE 00779 | DRAWING NO C-1106461 | RESTRICTED TO

CUSTOMER DRAWING | SCALE 1:1 | SHEET 1 OF 1 | REV A1B

AMP 4806 REV 31MAR2000

Pre-ENGINEER DRAWING