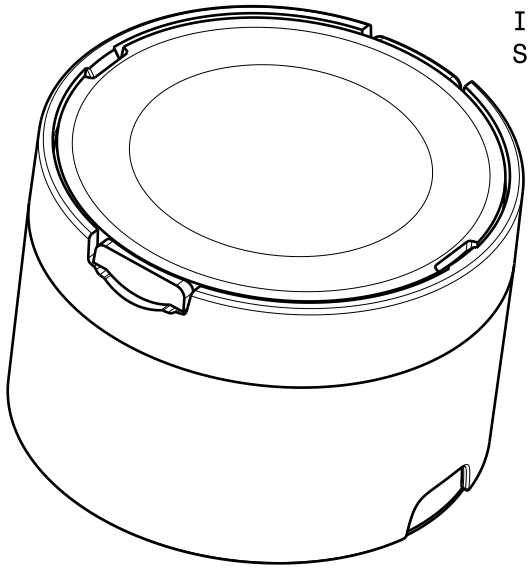

Isometric view
Scale: 3:1

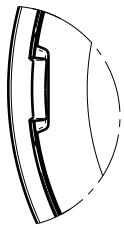

Detail A
Clip

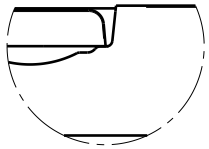

Detail B
Support

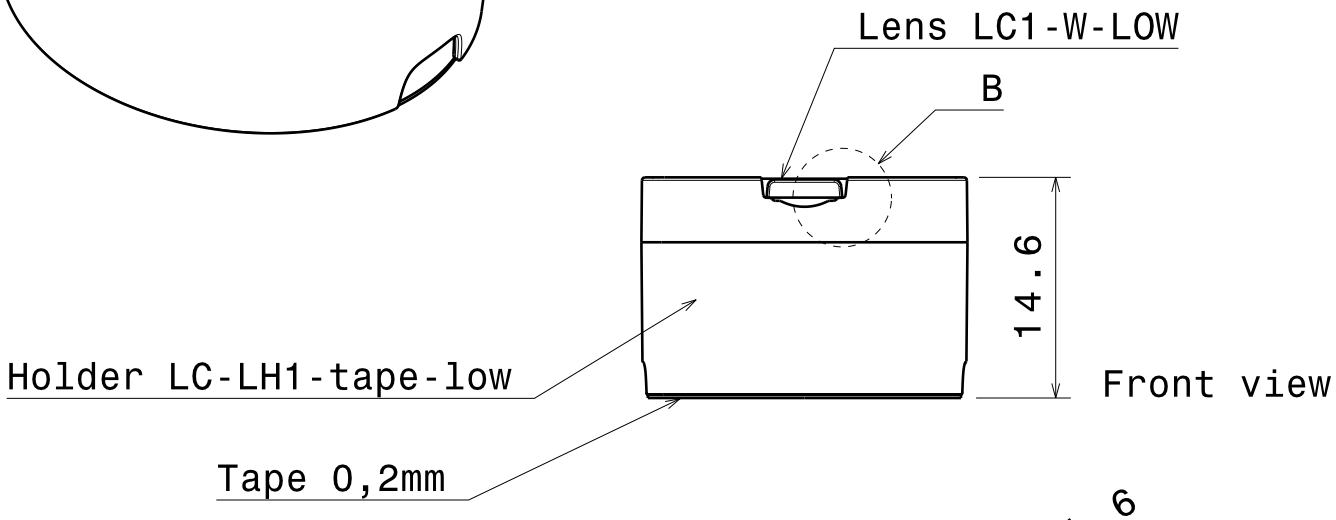

Front view

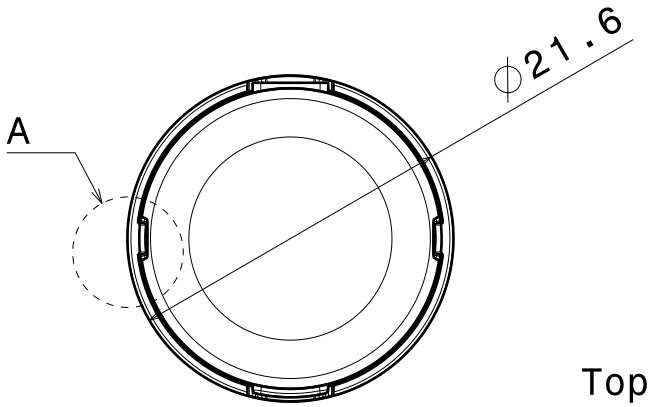

Top view

MATERIALS
Lens: PMMA
Holder: PC
Tape: PU Foam

This drawing is our property. It can't be reproduced or communicated without our written agreement.

Ledil Oy
Tehdaskatu 13
FIN-24100 SALO
Finland

DRAWN BY pv	DATE 23.09.2009	DRAWING TITLE Datasheet Assy Leila LC1-W-Low			
CHECKED BY tk	DATE 22.09.2009	SIZE A4	DRAWING NUMBER FA11134		REV 1
DESIGNED BY HH	DATE 29.01.2009	SCALE 2:1	WEIGHT(g) -		SHEET 1/1

Mouser Electronics

Authorized Distributor

Click to View Pricing, Inventory, Delivery & Lifecycle Information:

Ledil:

FA11134_LC1-W