THIS DRAWING IS UNPUBLISHED. RELEASED FOR PUBLICATION - ,- .
© COPYRIGHT - By - ALL RIGHTS RESERVED.

LOC	DIST
CM	00

REVISIONS

P	LTR	DESCRIPTION	DATE	DWN	APVD
	B2	REVISED PER ECR 15-003326	06MAR15	SC	KD

1 DIMENSIONS IN BRACKETS ARE IN INCHES.

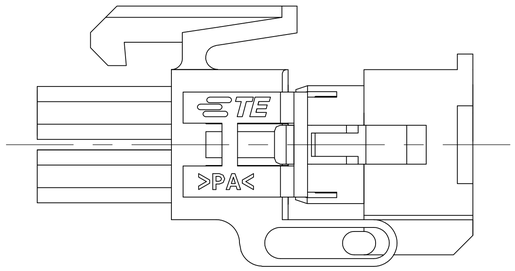

PRE-STAGED CONDITION

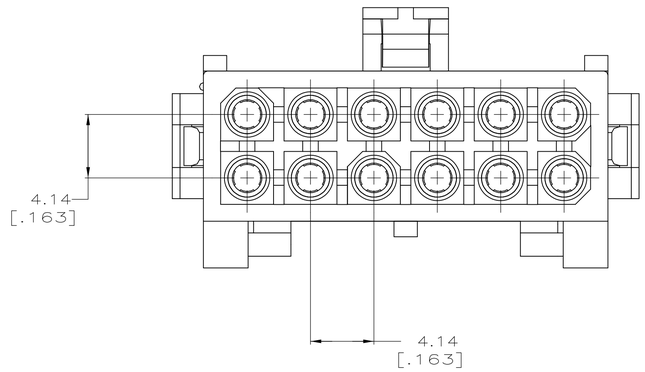

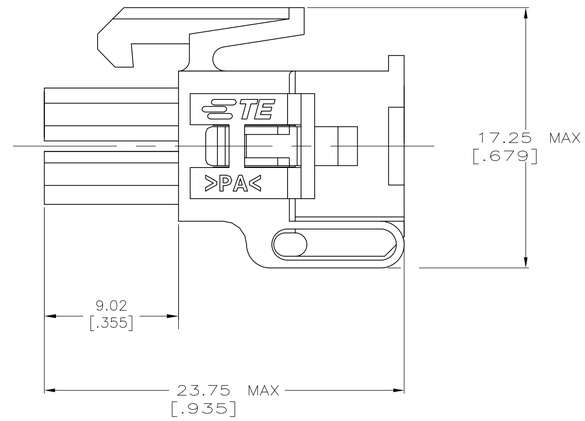

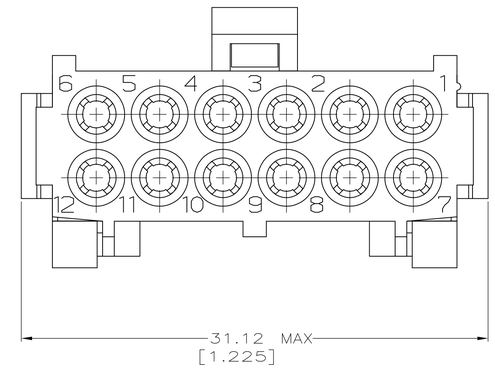

158659-1
PART NUMBER

THIS DRAWING IS A CONTROLLED DOCUMENT.

DIMENSIONS: mm [INCHES]

TOLERANCES UNLESS OTHERWISE SPECIFIED:
0 PLC ± –
1 PLC ± –
2 PLC ± –
3 PLC ± 0.13 [.005]
4 PLC ± –
ANGLES ± –

MATERIAL: NYLON,UL94V-0,NATURAL
FINISH: –

METRIC

DWN K. WHITAKER 13APR2005
CHK C. JONES 13APR2005
APVD C. JONES 13APR2005
PRODUCT SPEC —
APPLICATION SPEC —
WEIGHT —

TE Connectivity

NAME: PLUG, DUAL ROW, 12 CIRCUIT, SPECIAL KEYING, MINI UNIVERSAL MATE-N-LOK(TM) 2

SIZE	CAGE CODE	DRAWING NO	RESTRICTED TO
A1	00779	C-1586591	—

CUSTOMER DRAWING | SCALE 5:1 | SHEET 1 OF 1 | REV B2

4805 (3/11)