THIS DRAWING IS UNPUBLISHED. RELEASED FOR PUBLICATION -,- .
© COPYRIGHT - By - ALL RIGHTS RESERVED.

REVISIONS

P	LTR	DESCRIPTION	DATE	DWN	APVD
	H	REDWN & REV PER EC 0B40-0133-00	23JUN00	LMH	LHS
	J	REVISED PER ECR-16-015476	29DEC2016	RK	AS

1. HOUSING: NYLON, BLACK.
   INSERT: CARBON STEEL, 0.64[.025] THICK.
2. INSERT: ZINC PER QQ-Z325, CLASS 3, TYPE II.
3. FITS STANDARD 12.70[.500] KNOCKOUT $\varnothing 22.22^{+0.79}_{-0.38}$ $[.875^{+0.31}_{+0.15}]$.
4. PANEL RETENTION MECHANISM ACCOMMODATES PANEL THICKNESSES FROM 0.81[.032] TO 2.31[.091].

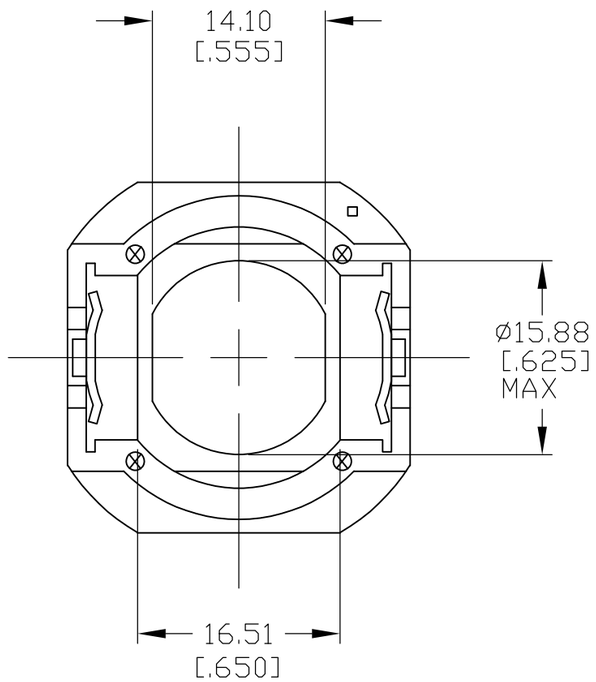

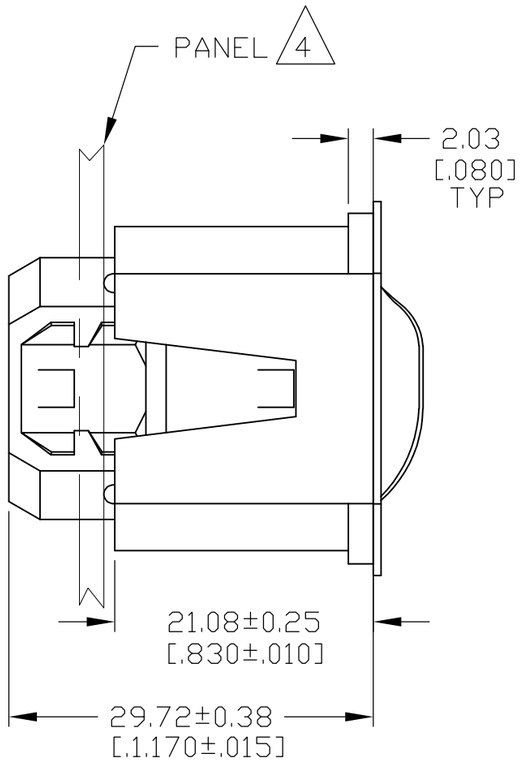

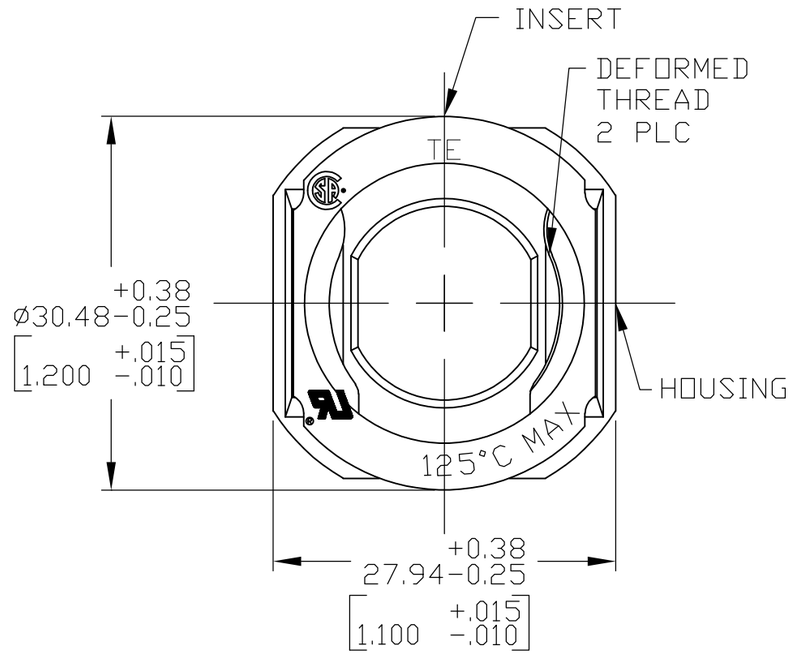

207373-1
PART NUMBER

THIS DRAWING IS A CONTROLLED DOCUMENT.

DIMENSIONS: mm[Inches]

TOLERANCES UNLESS OTHERWISE SPECIFIED:
0 PLC ±
1 PLC ±
2 PLC ± 0.13 [.005]
3 PLC ±
4 PLC ±
ANGLES ±

MATERIAL 1
FINISH 2

DWN	L.HALL	27APR00
CHK	L.H.SMITH	23JUN00
APVD	F. LINCOLN	23JUN00
PRODUCT SPEC		
APPLICATION SPEC		
WEIGHT	0	

TE Connectivity

NAME: CONNECTOR ASSEMBLY, .500 IN. FLEXIBLE CONDUIT

SIZE	CAGE CODE	DRAWING NO	RESTRICTED TO
A3	00779	C-207373	

CUSTOMER DRAWING | SCALE 2:1 | SHEET 1 OF 1 | REV J

1470-19 (1/15)