PDTA114T series

PNP resistor-equipped transistors; R1 = 10 kΩ, R2 = open

Rev. 07 — 20 April 2007 Product data sheet

1. Product profile

1.1 General description

PNP Resistor-Equipped Transistors (RET) family in small plastic packages.

Table 1. Product overview

Type number	Package			NPN complement
	NXP	JEITA	JEDEC	
PDTA114TE	SOT416	SC-75	-	PDTC114TE
PDTA114TK	SOT346	SC-59A	TO-236	PDTC114TK
PDTA114TM	SOT883	SC-101	-	PDTC114TM
PDTA114TS[1]	SOT54	SC-43A	TO-92	PDTC114TS
PDTA114TT	SOT23	-	TO-236AB	PDTC114TT
PDTA114TU	SOT323	SC-70	-	PDTC114TU

[1] Also available in SOT54A and SOT54 variant packages (see Section 2).

1.2 Features

- 100 mA output current capability
- Built-in bias resistors
- Simplifies circuit design
- Reduces component count
- Reduces pick and place costs

1.3 Applications

- Digital applications
- Control of IC inputs
- Cost-saving alternative to BC857 series in digital applications
- Low current peripheral driver

1.4 Quick reference data

Table 2. Quick reference data

Symbol	Parameter	Conditions	Min	Typ	Max	Unit
V_{CEO}	collector-emitter voltage	open base	-	-	–50	V
I_O	output current		-	-	–100	mA
R1	bias resistor 1 (input)		7	10	13	kΩ

founded by Philips

2. Pinning information

Table 3. Pinning

Pin	Description	Simplified outline	Symbol
SOT54			
1	input (base)	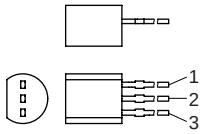 001aab347	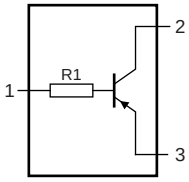 006aaa217
2	output (collector)		
3	GND (emitter)		
SOT54A			
1	input (base)	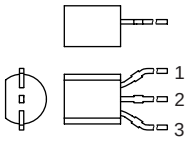 001aab348	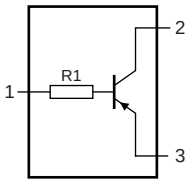 006aaa217
2	output (collector)		
3	GND (emitter)		
SOT54 variant			
1	input (base)	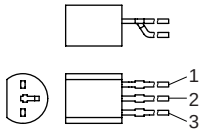 001aab447	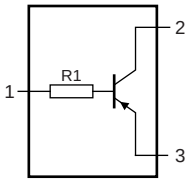 006aaa217
2	output (collector)		
3	GND (emitter)		
SOT23; SOT323; SOT346; SOT416			
1	input (base)	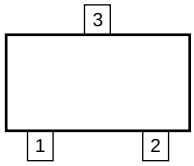 006aaa144	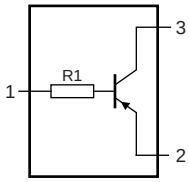 sym009
2	GND (emitter)		
3	output (collector)		
SOT883			
1	input (base)	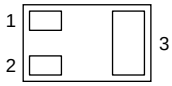 Transparent top view	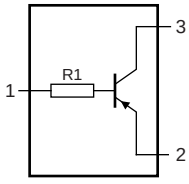 sym009
2	GND (emitter)		
3	output (collector)		

© NXP B.V. 2007. All rights reserved.

3. Ordering information

Table 4. Ordering information

Type number	Package		
	Name	Description	Version
PDTA114TE	SC-75	plastic surface-mounted package; 3 leads	SOT416
PDTA114TK	SC-59A	plastic surface-mounted package; 3 leads	SOT346
PDTA114TM	SC-101	leadless ultra small plastic package; 3 solder lands; body 1.0 × 0.6 × 0.5 mm	SOT883
PDTA114TS[1]	SC-43A	plastic single-ended leaded (through hole) package; 3 leads	SOT54
PDTA114TT	-	plastic surface-mounted package; 3 leads	SOT23
PDTA114TU	SC-70	plastic surface-mounted package; 3 leads	SOT323

[1] Also available in SOT54A and SOT54 variant packages (see Section 2 and Section 9).

4. Marking

Table 5. Marking codes

Type number	Marking code[1]
PDTA114TE	11
PDTA114TK	23
PDTA114TM	DE
PDTA114TS	TA114T
PDTA114TT	*11
PDTA114TU	*23

[1] * = -: made in Hong Kong
* = p: made in Hong Kong
* = t: made in Malaysia
* = W: made in China

© NXP B.V. 2007. All rights reserved.

5. Limiting values

Table 6. Limiting values

In accordance with the Absolute Maximum Rating System (IEC 60134).

Symbol	Parameter	Conditions		Min	Max	Unit
V_{CBO}	collector-base voltage	open emitter		-	–50	V
V_{CEO}	collector-emitter voltage	open base		-	–50	V
V_{EBO}	emitter-base voltage	open collector		-	–5	V
I_O	output current			-	–100	mA
I_{CM}	peak collector current	single pulse; $t_p \leq 1$ ms		-	–100	mA
P_{tot}	total power dissipation	$T_{amb} \leq 25$ °C				
	PDTA114TE		[1]	-	150	mW
	PDTA114TK		[1]	-	250	mW
	PDTA114TM		[2][3]	-	250	mW
	PDTA114TS		[1]	-	500	mW
	PDTA114TT		[1]	-	250	mW
	PDTA114TU		[1]	-	200	mW
T_j	junction temperature			-	150	°C
T_{amb}	ambient temperature			–65	+150	°C
T_{stg}	storage temperature			–65	+150	°C

[1] Device mounted on an FR4 Printed-Circuit Board (PCB), single-sided copper, tin-plated and standard footprint.

[2] Reflow soldering is the only recommended soldering method.

[3] Device mounted on an FR4 PCB with 60 μm copper strip line, standard footprint.

6. Thermal characteristics

Table 7. Thermal characteristics

Symbol	Parameter	Conditions		Min	Typ	Max	Unit
$R_{th(j-a)}$	thermal resistance from junction to ambient	in free air					
	PDTA114TE		[1]	-	-	833	K/W
	PDTA114TK		[1]	-	-	500	K/W
	PDTA114TM		[2][3]	-	-	500	K/W
	PDTA114TS		[1]	-	-	250	K/W
	PDTA114TT		[1]	-	-	500	K/W
	PDTA114TU		[1]	-	-	625	K/W

[1] Device mounted on an FR4 PCB, single-sided copper, tin-plated and standard footprint.

[2] Reflow soldering is the only recommended soldering method.

[3] Device mounted on an FR4 PCB with 60 μm copper strip line, standard footprint.

© NXP B.V. 2007. All rights reserved.

7. Characteristics

Table 8. Characteristics

T_{amb} = 25 °C unless otherwise specified.

Symbol	Parameter	Conditions	Min	Typ	Max	Unit
I_{CBO}	collector-base cut-off current	V_{CB} = –50 V; I_E = 0 A	-	-	–100	nA
I_{CEO}	collector-emitter cut-off current	V_{CE} = –30 V; I_B = 0 A	-	-	–1	µA
		V_{CE} = –30 V; I_B = 0 A; T_j = 150 °C	-	-	–50	µA
I_{EBO}	emitter-base cut-off current	V_{EB} = –5 V; I_C = 0 A	-	-	–100	nA
h_{FE}	DC current gain	V_{CE} = –5 V; I_C = –1 mA	200	-	-	
V_{CEsat}	collector-emitter saturation voltage	I_C = –10 mA; I_B = –0.5 mA	-	-	–150	mV
R1	bias resistor 1 (input)		7	10	13	kΩ
C_c	collector capacitance	V_{CB} = –10 V; I_E = i_e = 0 A; f = 1 MHz	-	-	3	pF

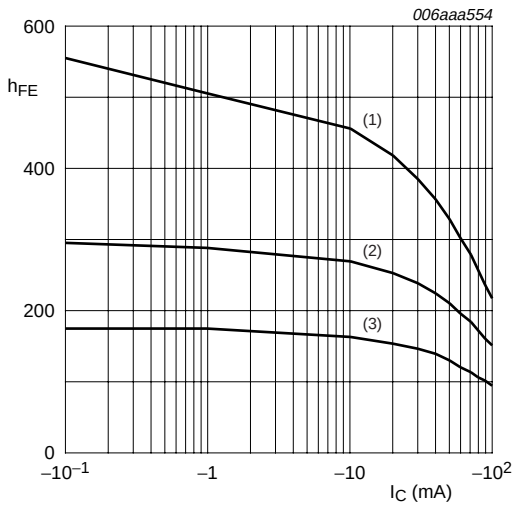

V_{CE} = –5 V

(1) T_{amb} = 150 °C

(2) T_{amb} = 25 °C

(3) T_{amb} = –40 °C

Fig 1. DC current gain as a function of collector current; typical values

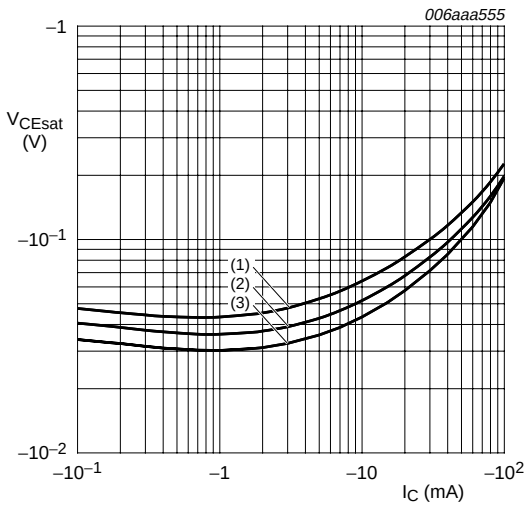

I_C/I_B = 20

(1) T_{amb} = 100 °C

(2) T_{amb} = 25 °C

(3) T_{amb} = –40 °C

Fig 2. Collector-emitter saturation voltage as a function of collector current; typical values

© NXP B.V. 2007. All rights reserved.

8. Package outline

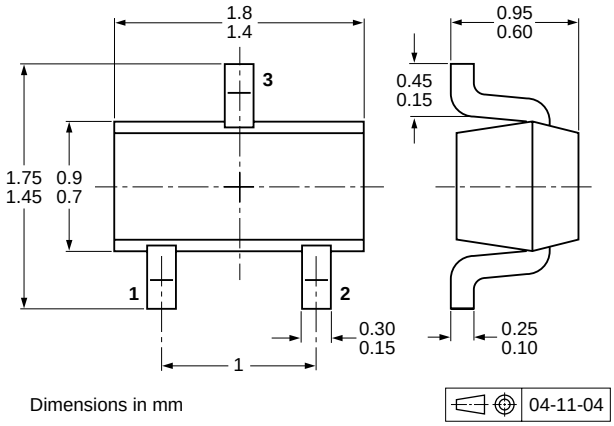

Fig 3. Package outline SOT416 (SC-75)

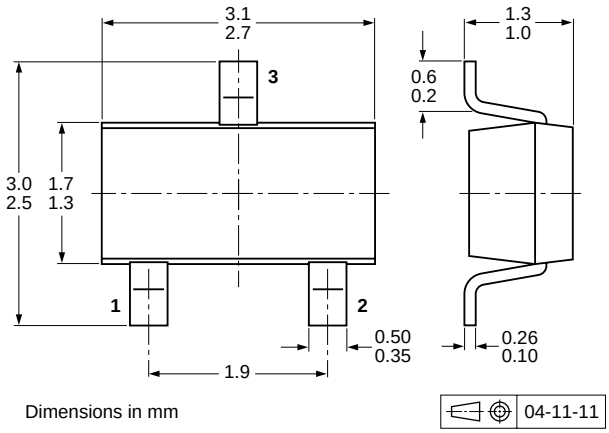

Fig 4. Package outline SOT346 (SC-59A/TO-236)

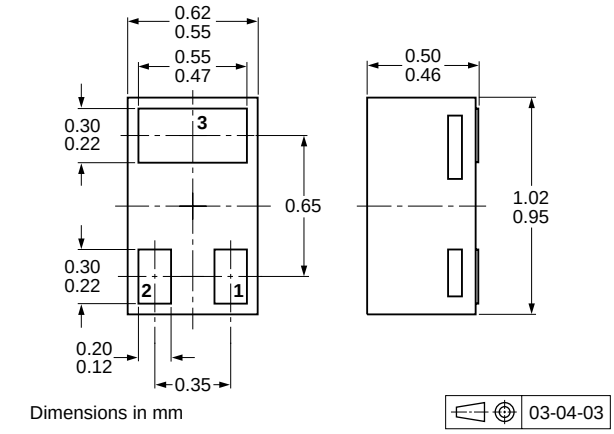

Fig 5. Package outline SOT883 (SC-101)

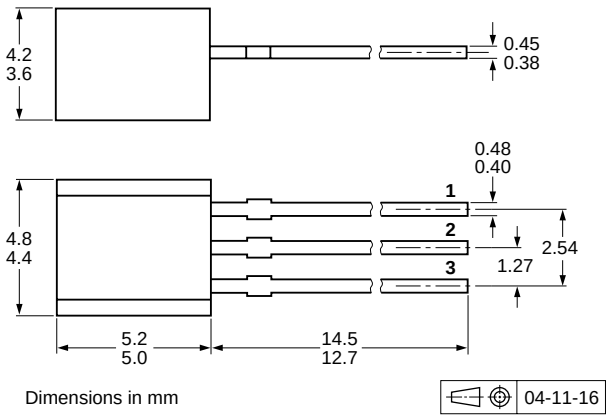

Fig 6. Package outline SOT54 (SC-43A/TO-92)

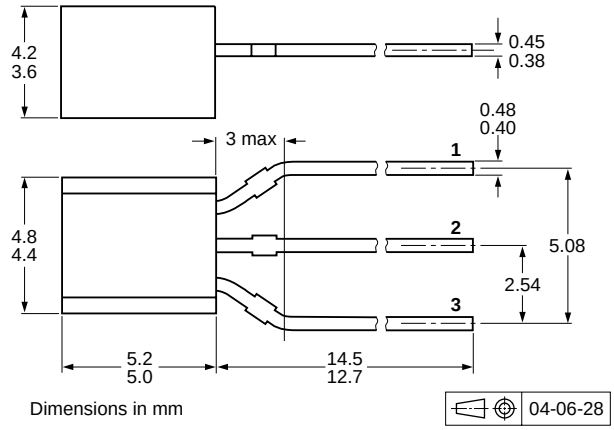

Fig 7. Package outline SOT54A

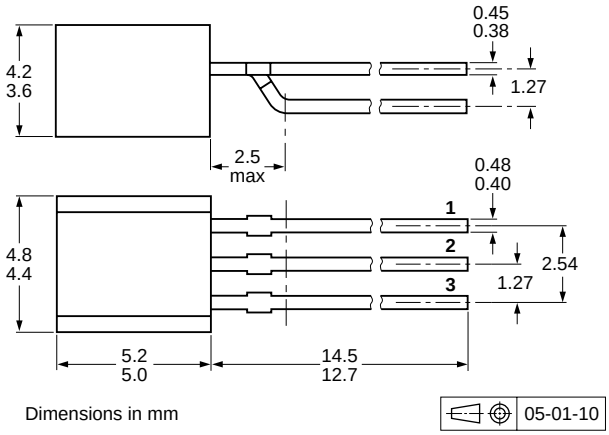

Fig 8. Package outline SOT54 variant

© NXP B.V. 2007. All rights reserved.

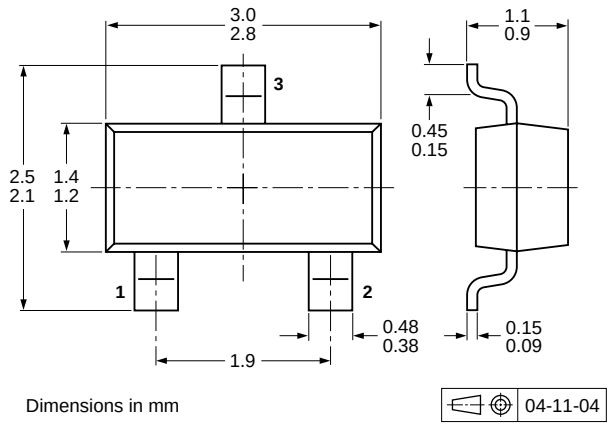

Fig 9. Package outline SOT23 (TO-236AB)

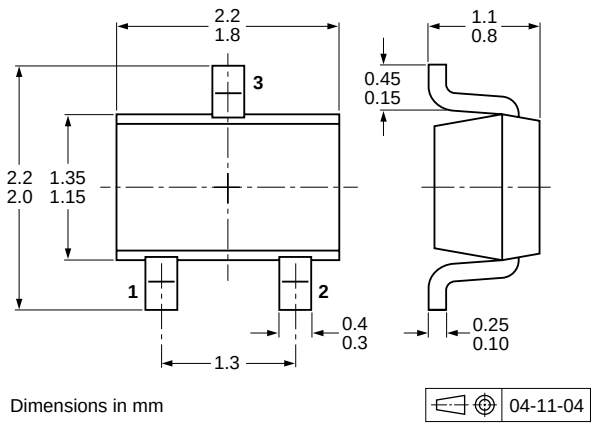

Fig 10. Package outline SOT323 (SC-70)

© NXP B.V. 2007. All rights reserved.

9. Packing information

Table 9. Packing methods

The indicated -xxx are the last three digits of the 12NC ordering code.[1]

Type number	Package	Description	Packing quantity		
			3000	5000	10000
PDTA114TE	SOT416	4 mm pitch, 8 mm tape and reel	-115	-	-135
PDTA114TK	SOT346	4 mm pitch, 8 mm tape and reel	-115	-	-135
PDTA114TM	SOT883	2 mm pitch, 8 mm tape and reel	-	-	-315
PDTA114TS	SOT54	bulk, straight leads	-	-412	-
	SOT54A	tape and reel, wide pitch	-	-	-116
		tape ammopack, wide pitch	-	-	-126
	SOT54 variant	bulk, delta pinning	-	-112	-
PDTA114TT	SOT23	4 mm pitch, 8 mm tape and reel	-215	-	-235
PDTA114TU	SOT323	4 mm pitch, 8 mm tape and reel	-115	-	-135

[1] For further information and the availability of packing methods, see Section 12.

© NXP B.V. 2007. All rights reserved.

10. Revision history

Table 10. Revision history

Document ID	Release date	Data sheet status	Change notice	Supersedes
PDTA114T_SER_7	20070420	Product data sheet	-	PDTA114T_SERIES_6
Modifications:	• The format of this data sheet has been redesigned to comply with the new identity guidelines of NXP Semiconductors. • Legal texts have been adapted to the new company name where appropriate. • Type number PDTA114TEF removed • Section 1.2 “Features”: amended • Section 1.3 “Applications”: amended • Table 4 “Ordering information”: added • Table 5 “Marking codes”: enhanced table note section • Table 6 “Limiting values”: I_{CM} peak collector current conditions added • Figure 1, 2, 7 and 8: added • Figure 3, 4, 5, 6, 9 and 10: superseded by minimized package outline drawings • Section 9 “Packing information”: added • Section 11 “Legal information”: updated			
PDTA114T_SERIES_6	20040802	Product specification	-	PDTA114T_SERIES_5
PDTA114T_SERIES_5	20030909	Product specification	-	PDTA114T_SERIES_4
PDTA114T_SERIES_4	20030410	Product specification	-	PDTA114TE_2 PDTA114TK_3 PDTA114TS_2 PDTA114TT_3 PDTA114TU_3
PDTA114TE_2	19980723	Preliminary specification	-	PDTA114TE_1
PDTA114TK_3	19980515	Product specification	-	PDTA114TK_2
PDTA114TS_2	19980515	Product specification	-	PDTA114TS_1
PDTA114TT_3	19990413	Objective specification	-	PDTA114TT_2
PDTA114TU_3	19990413	Product specification	-	PDTA114TU_2

© NXP B.V. 2007. All rights reserved.

11. Legal information

11.1 Data sheet status

Document status[1][2]	Product status[3]	Definition
Objective [short] data sheet	Development	This document contains data from the objective specification for product development.
Preliminary [short] data sheet	Qualification	This document contains data from the preliminary specification.
Product [short] data sheet	Production	This document contains the product specification.

[1] Please consult the most recently issued document before initiating or completing a design.

[2] The term 'short data sheet' is explained in section "Definitions".

[3] The product status of device(s) described in this document may have changed since this document was published and may differ in case of multiple devices. The latest product status information is available on the Internet at URL http://www.nxp.com.

11.2 Definitions

Draft — The document is a draft version only. The content is still under internal review and subject to formal approval, which may result in modifications or additions. NXP Semiconductors does not give any representations or warranties as to the accuracy or completeness of information included herein and shall have no liability for the consequences of use of such information.

Short data sheet — A short data sheet is an extract from a full data sheet with the same product type number(s) and title. A short data sheet is intended for quick reference only and should not be relied upon to contain detailed and full information. For detailed and full information see the relevant full data sheet, which is available on request via the local NXP Semiconductors sales office. In case of any inconsistency or conflict with the short data sheet, the full data sheet shall prevail.

11.3 Disclaimers

General — Information in this document is believed to be accurate and reliable. However, NXP Semiconductors does not give any representations or warranties, expressed or implied, as to the accuracy or completeness of such information and shall have no liability for the consequences of use of such information.

Right to make changes — NXP Semiconductors reserves the right to make changes to information published in this document, including without limitation specifications and product descriptions, at any time and without notice. This document supersedes and replaces all information supplied prior to the publication hereof.

Suitability for use — NXP Semiconductors products are not designed, authorized or warranted to be suitable for use in medical, military, aircraft, space or life support equipment, nor in applications where failure or malfunction of a NXP Semiconductors product can reasonably be expected to result in personal injury, death or severe property or environmental damage. NXP Semiconductors accepts no liability for inclusion and/or use of NXP Semiconductors products in such equipment or applications and therefore such inclusion and/or use is at the customer's own risk.

Applications — Applications that are described herein for any of these products are for illustrative purposes only. NXP Semiconductors makes no representation or warranty that such applications will be suitable for the specified use without further testing or modification.

Limiting values — Stress above one or more limiting values (as defined in the Absolute Maximum Ratings System of IEC 60134) may cause permanent damage to the device. Limiting values are stress ratings only and operation of the device at these or any other conditions above those given in the Characteristics sections of this document is not implied. Exposure to limiting values for extended periods may affect device reliability.

Terms and conditions of sale — NXP Semiconductors products are sold subject to the general terms and conditions of commercial sale, as published at http://www.nxp.com/profile/terms, including those pertaining to warranty, intellectual property rights infringement and limitation of liability, unless explicitly otherwise agreed to in writing by NXP Semiconductors. In case of any inconsistency or conflict between information in this document and such terms and conditions, the latter will prevail.

No offer to sell or license — Nothing in this document may be interpreted or construed as an offer to sell products that is open for acceptance or the grant, conveyance or implication of any license under any copyrights, patents or other industrial or intellectual property rights.

11.4 Trademarks

Notice: All referenced brands, product names, service names and trademarks are the property of their respective owners.

12. Contact information

For additional information, please visit: **http://www.nxp.com**

For sales office addresses, send an email to: **salesaddresses@nxp.com**

© NXP B.V. 2007. All rights reserved.

13. Contents

1 Product profile 1
1.1 General description. 1
1.2 Features 1
1.3 Applications 1
1.4 Quick reference data. 1
2 Pinning information 2
3 Ordering information 3
4 Marking 3
5 Limiting values 4
6 Thermal characteristics. 4
7 Characteristics 5
8 Package outline 6
9 Packing information. 8
10 Revision history 9
11 Legal information. 10
11.1 Data sheet status 10
11.2 Definitions 10
11.3 Disclaimers 10
11.4 Trademarks 10
12 Contact information 10
13 Contents 11

Please be aware that important notices concerning this document and the product(s) described herein, have been included in section 'Legal information'.

founded by PHILIPS

© NXP B.V. 2007. All rights reserved.

For more information, please visit: http://www.nxp.com
For sales office addresses, please send an email to: salesaddresses@nxp.com

Date of release: 20 April 2007
Document identifier: PDTA114T_SER_7