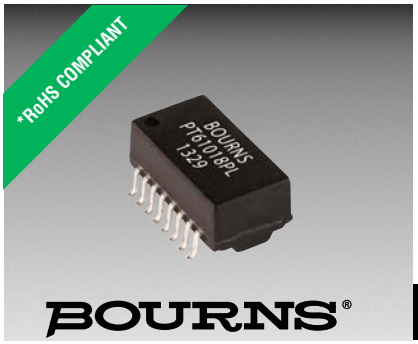

Features

- IEEE 802.3 Ethernet compatible
- Dual channel 16-pin SMD
- Wide operating temperature range: -40 to +85 °C
- RoHS compliant*

Applications

- Ethernet

PT61018PEL - LAN 10/100 Base-Tx

Electrical Specifications @ 25 °C

Inductance - OCL
.....350 μH min. @ 100 KHz, 0.1 Vrms, 8 mA DC Bias
Turns Ratio (± 5%) 1CT*:1CT*
DCR..... 1.2 Ω max.
Insertion Loss
1-100 MHz ..... -1.15 dB max.
Return Loss
1-30 MHz .....-18 dB min.
30-60 MHz .....-13 dB min.
60-80 MHz .....-12 dB min.
Common Mode Rejection
1-60 MHz .....-37 dB Min.
60-100 MHz .....-28 dB Min.
Crosstalk
1-60 MHz .....-40 dB Min.
60-100 MHz .....-35 dB Min.
Hipot
@1 mA, 2 sec. ..... 1.5K Vrms
Operating Temperature .....-40 to +85 °C
Storage Temperature.....-40 to +85 °C

*CT: Center tap

Material

Termination..... Tin

Packaging Specifications

Tape & Reel..... 600 pcs./reel

How To Order

PT61018 P E L

Model
Construction
P = Potted
Packaging
E = Tape and Reel (600 pcs./reel)
Termination
L = Tin only (RoHS Compliant)

Product Dimensions

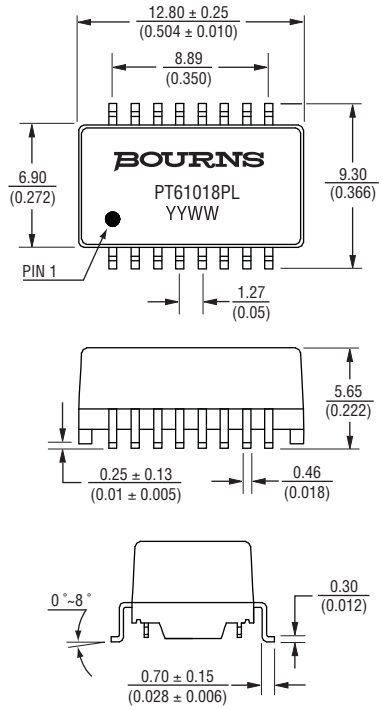

Recommended Layout

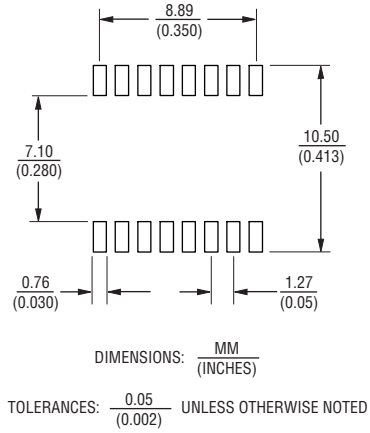

Electrical Schematic

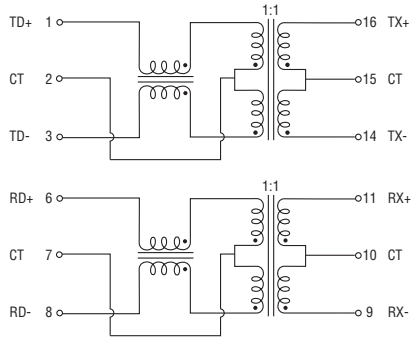

Packaging Specifications

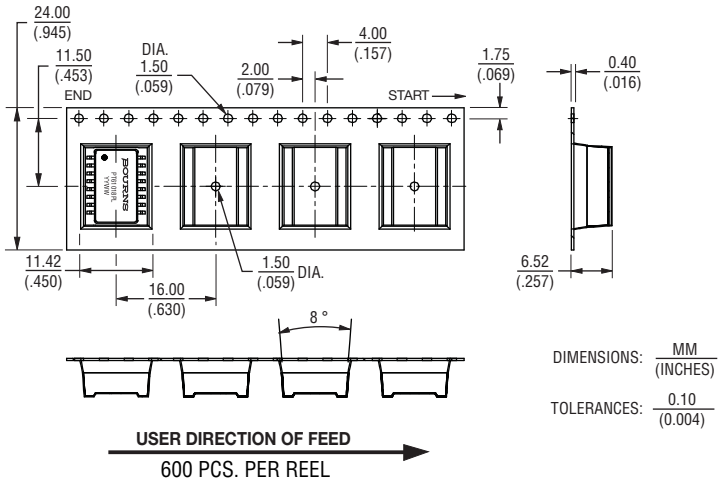

Asia-Pacific:
Tel: +886-2 2562-4117
Fax: +886-2 2562-4116
EMEA:
Tel: +36 88 520 390
Fax: +36 88 520 211
The Americas:
Tel: +1-951 781-5500
Fax: +1-951 781-5700
www.bourns.com

05/14

*RoHS Directive 2002/95/EC Jan. 27, 2003 including annex and RoHS Recast 2011/65/EU June 8, 2011.
Specifications are subject to change without notice.
The device characteristics and parameters in this data sheet can and do vary in different applications and actual device performance may vary over time.
Users should verify actual device performance in their specific applications.