THIS DRAWING IS UNPUBLISHED. RELEASED FOR PUBLICATION -,- .
© COPYRIGHT - BY TYCO ELECTRONICS CORPORATION. ALL RIGHTS RESERVED.

LOC	DIST
GP	00

REVISIONS

P	LTR	DESCRIPTION	DATE	DWN	APVD
	B	REVISED PER ECO-08-003116	05FEB08	BM	DG

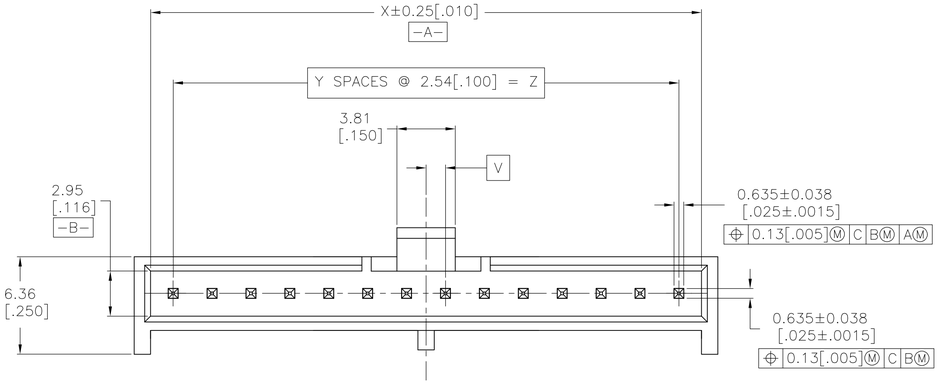

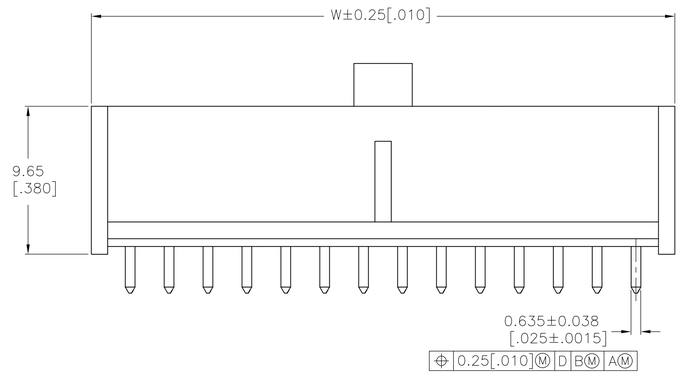

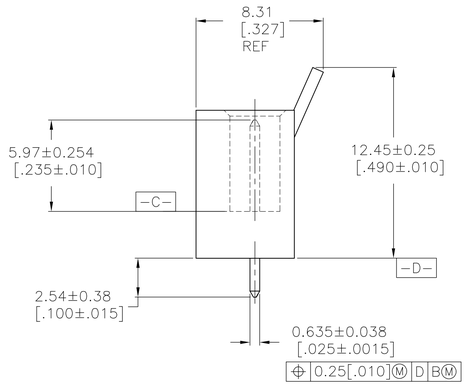

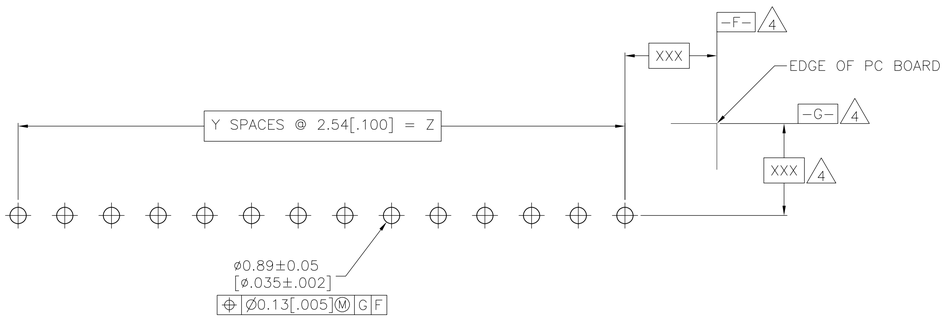

RECOMMENDED PC BOARD LAYOUT
1.57[.062] PC BOARD
VIEWED FROM CONNECTOR SIDE

1. MATERIAL:
   HOUSING: NYLON, 94V-0 RATED, COLOR: BLUE.
   CONTACTS: PHOSPHOR BRONZE
2. FINISH:
   CONTACTS: 0.76µm[.000030] MIN GOLD IN CONTACT AREA. .00254[.000100] MIN TIN ON SOLDER POST, ALL OVER 0.00127[.000050] MIN NICKEL.
3. FINISH:
   CONTACTS: 0.00254[.000100] MIN TIN OVER 0.00127[.000050] MIN NICKEL.
4. DATUMS AND BASIC DIMENSIONS TO BE ESTABLISHED BY THE CUSTOMER.

FINISH	DIM Z	DIM Y	DIM X	DIM W	DIM V	NUMBER OF POSITIONS	PART NUMBER
3	55.88[2.200]	22	58.83[2.316]	60.96[2.400]	0.00[.000]	23	4-1888291-0
2	55.88[2.200]	22	58.83[2.316]	60.96[2.400]	0.00[.000]	23	3-1888291-9
3	53.34[2.100]	21	56.29[2.216]	58.42[2.300]	1.27[.050]	22	3-1888291-8
2	53.34[2.100]	21	56.29[2.216]	58.42[2.300]	1.27[.050]	22	3-1888291-7
3	50.80[2.000]	20	53.75[2.116]	55.88[2.200]	0.00[.000]	21	3-1888291-6
2	50.80[2.000]	20	53.75[2.116]	55.88[2.200]	0.00[.000]	21	3-1888291-5
3	48.26[1.900]	19	51.21[2.016]	53.34[2.100]	1.27[.050]	20	3-1888291-4
2	48.26[1.900]	19	51.21[2.016]	53.34[2.100]	1.27[.050]	20	3-1888291-3
3	45.72[1.800]	18	48.67[1.916]	50.80[2.000]	0.00[.000]	19	3-1888291-2
2	45.72[1.800]	18	48.67[1.916]	50.80[2.000]	0.00[.000]	19	3-1888291-1
3	43.18[1.700]	17	46.13[1.816]	48.26[1.900]	1.27[.050]	18	3-1888291-0
2	43.18[1.700]	17	46.13[1.816]	48.26[1.900]	1.27[.050]	18	2-1888291-9
3	40.64[1.600]	16	43.59[1.716]	45.72[1.800]	0.00[.000]	17	2-1888291-8
2	40.64[1.600]	16	43.59[1.716]	45.72[1.800]	0.00[.000]	17	2-1888291-7
3	38.10[1.500]	15	41.05[1.616]	43.18[1.700]	1.27[.050]	16	2-1888291-6
2	38.10[1.500]	15	41.05[1.616]	43.18[1.700]	1.27[.050]	16	2-1888291-5
3	35.56[1.400]	14	38.51[1.516]	40.64[1.600]	0.00[.000]	15	2-1888291-4
2	35.56[1.400]	14	38.51[1.516]	40.64[1.600]	0.00[.000]	15	2-1888291-3
3	33.02[1.300]	13	35.97[1.416]	38.10[1.500]	1.27[.050]	14	2-1888291-2
2	33.02[1.300]	13	35.97[1.416]	38.10[1.500]	1.27[.050]	14	2-1888291-1
3	30.48[1.200]	12	33.43[1.316]	35.56[1.400]	0.00[.000]	13	2-1888291-0
2	30.48[1.200]	12	33.43[1.316]	35.56[1.400]	0.00[.000]	13	1-1888291-9
3	27.94[1.100]	11	30.89[1.216]	33.02[1.300]	1.27[.050]	12	1-1888291-8
2	27.94[1.100]	11	30.89[1.216]	33.02[1.300]	1.27[.050]	12	1-1888291-7
3	25.40[1.000]	10	28.35[1.116]	30.48[1.200]	0.00[.000]	11	1-1888291-6
2	25.40[1.000]	10	28.35[1.116]	30.48[1.200]	0.00[.000]	11	1-1888291-5
3	22.86[0.900]	9	25.81[1.016]	27.94[1.100]	1.27[.050]	10	1-1888291-4
2	22.86[0.900]	9	25.81[1.016]	27.94[1.100]	1.27[.050]	10	1-1888291-3
3	20.32[0.800]	8	23.27[0.916]	25.40[1.000]	0.00[.000]	9	1-1888291-2
2	20.32[0.800]	8	23.27[0.916]	25.40[1.000]	0.00[.000]	9	1-1888291-1
3	17.78[0.700]	7	20.73[0.816]	22.86[0.900]	1.27[.050]	8	1-1888291-0
2	17.78[0.700]	7	20.73[0.816]	22.86[0.900]	1.27[.050]	8	1888291-9
3	15.24[0.600]	6	18.19[0.716]	20.32[0.800]	0.00[.000]	7	1888291-8
2	15.24[0.600]	6	18.19[0.716]	20.32[0.800]	0.00[.000]	7	1888291-7
3	12.70[0.500]	5	15.65[0.616]	17.78[0.700]	1.27[.050]	6	1888291-6
2	12.70[0.500]	5	15.65[0.616]	17.78[0.700]	1.27[.050]	6	1888291-5
3	10.16[0.400]	4	13.11[0.516]	15.24[0.600]	0.00[.000]	5	1888291-4
2	10.16[0.400]	4	13.11[0.516]	15.24[0.600]	0.00[.000]	5	1888291-3
3	7.62[0.300]	3	10.57[0.416]	12.70[0.500]	1.27[.050]	4	1888291-2
2	7.62[0.300]	3	10.57[0.416]	12.70[0.500]	1.27[.050]	4	1888291-1

THIS DRAWING IS A CONTROLLED DOCUMENT.

DIMENSIONS: mm [INCHES]

TOLERANCES, UNLESS OTHERWISE SPECIFIED:
0 PLC ± -
1 PLC ± -
2 PLC ± 0.13[.005]
3 PLC ± -
4 PLC ± -
ANGLES ± -

MATERIAL 1
FINISH 2 3

DWN B. MCMASTER 08JUN06
CHK D. GORENC 08JUN06
APVD D. GORENC 08JUN06
PRODUCT SPEC -
APPLICATION SPEC -
WEIGHT -

Tyco Electronics
Tyco Electronics Corporation
Harrisburg, PA 17105-3608

NAME HEADER ASSY, VERTICAL, SINGLE ROW, FLEXPAC

SIZE	CAGE CODE	DRAWING NO	RESTRICTED TO
A1	00779	C-1888291	-

CUSTOMER DRAWING SCALE 6:1 SHEET 1 OF 2 REV B

THIS DRAWING IS UNPUBLISHED. RELEASED FOR PUBLICATION -,- .
© COPYRIGHT - BY TYCO ELECTRONICS CORPORATION. ALL RIGHTS RESERVED.

LOC	DIST
GP	00

REVISIONS

P	LTR	DESCRIPTION	DATE	DWN	APVD
	—	SEE SHEET 1	—	—	—

FINISH	DIM Z	DIM Y	DIM X	DIM W	DIM V	NUMBER OF POSITIONS	PART NUMBER
3	99.06[3.900]	39	102.01[4.016]	104.14[4.100]	1.27[.050]	40	7-1888291-4
2	99.06[3.900]	39	102.01[4.016]	104.14[4.100]	1.27[.050]	40	7-1888291-3
3	96.52[3.800]	38	99.47[3.916]	101.60[4.000]	0.00[.000]	39	7-1888291-2
2	96.52[3.800]	38	99.47[3.916]	101.60[4.000]	0.00[.000]	39	7-1888291-1
3	93.98[3.700]	37	96.93[3.816]	99.06[3.900]	1.27[.050]	38	7-1888291-0
2	93.98[3.700]	37	96.93[3.816]	99.06[3.900]	1.27[.050]	38	6-1888291-9
3	91.44[3.600]	36	94.39[3.716]	96.52[3.800]	0.00[.000]	37	6-1888291-8
2	91.44[3.600]	36	94.39[3.716]	96.52[3.800]	0.00[.000]	37	6-1888291-7
3	88.90[3.500]	35	91.85[3.616]	93.98[3.700]	1.27[.050]	36	6-1888291-6
2	88.90[3.500]	35	91.85[3.616]	93.98[3.700]	1.27[.050]	36	6-1888291-5
3	86.36[3.400]	34	89.31[3.516]	91.44[3.600]	0.00[.000]	35	6-1888291-4
2	86.36[3.400]	34	89.31[3.516]	91.44[3.600]	0.00[.000]	35	6-1888291-3
3	83.82[3.300]	33	86.77[3.416]	88.90[3.500]	1.27[.050]	34	6-1888291-2
2	83.82[3.300]	33	86.77[3.416]	88.90[3.500]	1.27[.050]	34	6-1888291-1
3	81.28[3.200]	32	84.23[3.316]	86.36[3.400]	0.00[.000]	33	6-1888291-0
2	81.28[3.200]	32	84.23[3.316]	86.36[3.400]	0.00[.000]	33	5-1888291-9
3	78.74[3.100]	31	81.69[3.216]	83.82[3.300]	1.27[.050]	32	5-1888291-8
2	78.74[3.100]	31	81.69[3.216]	83.82[3.300]	1.27[.050]	32	5-1888291-7
3	76.20[3.000]	30	79.15[3.116]	81.28[3.200]	0.00[.000]	31	5-1888291-6
2	76.20[3.000]	30	79.15[3.116]	81.28[3.200]	0.00[.000]	31	5-1888291-5
3	73.66[2.900]	29	76.61[3.016]	78.74[3.100]	1.27[.050]	30	5-1888291-4
2	73.66[2.900]	29	76.61[3.016]	78.74[3.100]	1.27[.050]	30	5-1888291-3
3	71.12[2.800]	28	74.07[2.916]	76.20[3.000]	0.00[.000]	29	5-1888291-2
2	71.12[2.800]	28	74.07[2.916]	76.20[3.000]	0.00[.000]	29	5-1888291-1
3	68.58[2.700]	27	71.53[2.816]	73.66[2.900]	1.27[.050]	28	5-1888291-0
2	68.58[2.700]	27	71.53[2.816]	73.66[2.900]	1.27[.050]	28	4-1888291-9
3	66.04[2.600]	26	68.99[2.716]	71.12[2.800]	0.00[.000]	27	4-1888291-8
2	66.04[2.600]	26	68.99[2.716]	71.12[2.800]	0.00[.000]	27	4-1888291-7
3	63.50[2.500]	25	66.45[2.616]	68.58[2.700]	1.27[.050]	26	4-1888291-6
2	63.50[2.500]	25	66.45[2.616]	68.58[2.700]	1.27[.050]	26	4-1888291-5
3	60.96[2.400]	24	63.91[2.516]	66.04[2.600]	0.00[.000]	25	4-1888291-4
2	60.96[2.400]	24	63.91[2.516]	66.04[2.600]	0.00[.000]	25	4-1888291-3
3	58.42[2.300]	23	61.37[2.416]	63.50[2.500]	1.27[.050]	24	4-1888291-2
2	58.42[2.300]	23	61.37[2.416]	63.50[2.500]	1.27[.050]	24	4-1888291-1

THIS DRAWING IS A CONTROLLED DOCUMENT.

DIMENSIONS: mm [INCHES]

TOLERANCES UNLESS OTHERWISE SPECIFIED:
0 PLC ± -
1 PLC ± -
2 PLC ± 0.13[.005]
3 PLC ± -
4 PLC ± -
ANGLES ± -

MATERIAL -
FINISH -

DWN B. MCMASTER 08JUN06
CHK D. GORENC 08JUN06
APVD D. GORENC 08JUN06
PRODUCT SPEC —
APPLICATION SPEC —
WEIGHT —

Tyco Electronics
Tyco Electronics Corporation
Harrisburg, PA 17105-3608

NAME HEADER ASSY, VERTICAL, SINGLE ROW, FLEXPAC

SIZE A1 | CAGE CODE 00779 | DRAWING NO C-1888291 | RESTRICTED TO —

CUSTOMER DRAWING | SCALE 6:1 | SHEET 2 OF 2 | REV B