ROHS COMPLIANT

PRODUCT DATA DRAWING

REVISION HISTORY			
REV	DESCRIPTION	DATE	APPROVED
01	PRELIMINARY	07/12	FED
-	DCN 39315	08/12	STW
A	DCN 40233	12/13	FSG

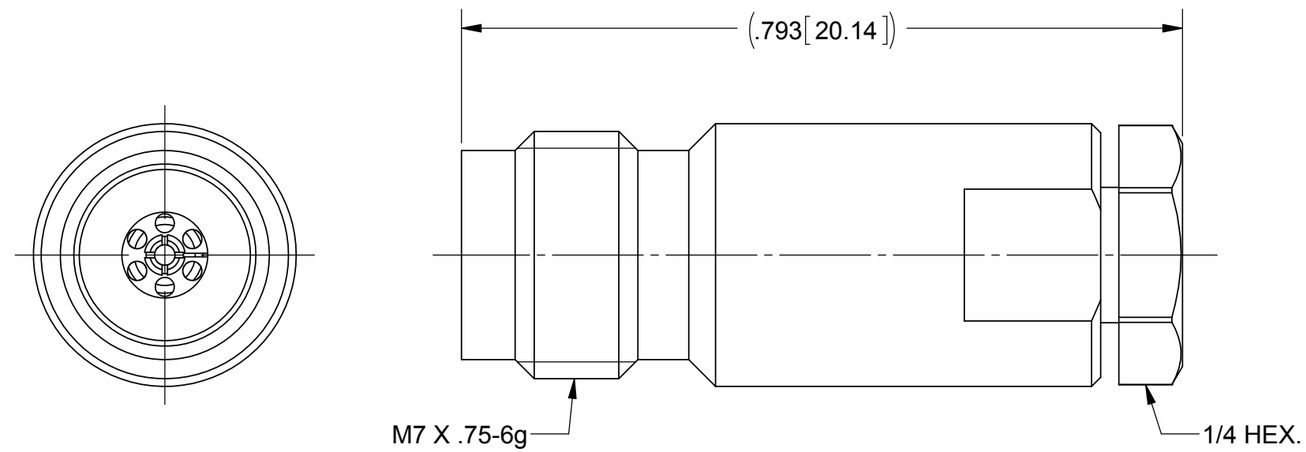

MATERIAL:

BODY, FERRULE & CLAMP NUT: STAINLESS STEEL PER AMS-5640, ALLOY UNS S30300, TYPE 1

CONTACT: BERYLLIUM COPPER PER ASTM B196, ALLOY No. UNS C17300, TD04

INSULATOR: ULTEM 1000 PER ASTM D5205

FINISH:

BODY & CLAMP NUT: PASSIVATED PER AMS-2700

CONTACT & FERRULE: GOLD PER ASTM B488, TYPE II, CODE C, CLASS 0.76, OVER NICKEL PER AMS-QQ-N-290, CLASS 1, .00005" MIN.

PERFORMANCE:

IMPEDANCE: 50 OHMS
FREQ. RANGE: DC TO 50.0 GHz

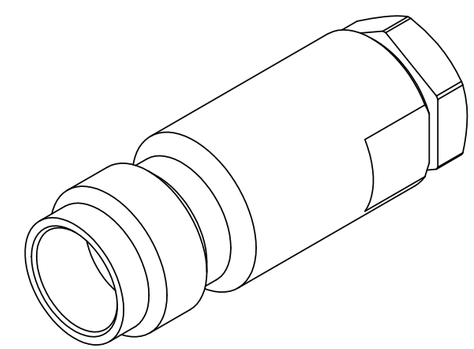

MATERIAL: SEE NOTES
FINISH: SEE NOTES
SURFACE AREA: N/A

PROPRIETARY

THE INFORMATION CONTAINED IN THIS DRAWING IS THE SOLE PROPERTY OF SV MICROWAVE, INC. ANY REPRODUCTION IN PART OR AS A WHOLE WITHOUT THE WRITTEN PERMISSION OF SV MICROWAVE, INC IS PROHIBITED.

DIMENSIONS ARE IN INCHES TOLERANCES:
FRACTIONAL: ±1/64 ANGULAR: X° ±1°0' X°X' ±15'
DECIMAL: .X ±.030 .XX ±.010 .XXX ±.005

INTERPRET DIMENSIONS AND TOLERANCES PER ASME Y14.5M - 1994

THIRD ANGLE PROJECTION

UNLESS OTHERWISE SPECIFIED
1) ALL DIMENSIONS ARE IN INCHES [MILLIMETERS]
2) ALL DIMENSIONS ARE AFTER PLATING.
3) BREAK CORNERS & EDGES .005 R. MAX.
4) CHAM. 1ST & LAST THREADS.
5) SURFACE ROUGHNESS 63 MIL-STD-10.
6) DIA.'S ON COMMON CENTERS TO BE CONCENTRIC WITHIN .005 T.I.R.
7) REMOVE ALL BURRS

DRAWN:	FED	07/25/12
CHECKED:	STW	08/22/12
APPROVED:	STW	08/22/12

SV Microwave, Inc.
2400 Centrepark West Drive, Suite 100
West Palm Beach, FL 33409

TITLE: 2.4mm JACK SOLDER CLAMP FOR Ø.047 S.R. CABLE

SIZE B | CAGE CODE 95077 | DWG. NO. SF1621-60014

SCALE: 6:1 | SHEET 1 OF 1