THIS DRAWING IS UNPUBLIDHED. RELEASED FOR PUBLICATION 20
© COPYRIGHT 20 BY ALL RIGHTS RESERVED.

LOC	DIST
DS	—

REVISIONS

P	LTR	DESCRIPTION	DATE	DWN	APVD
	0	RELEASE ECN(FC00-0121-03)	22,AUG,03	JW	CS
	A	REVISED (ECR-10-025105)	08,DEC,10	JH	HG

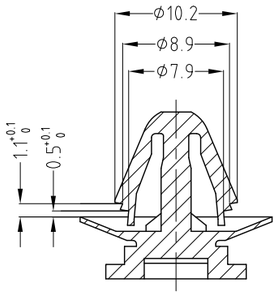

A-A

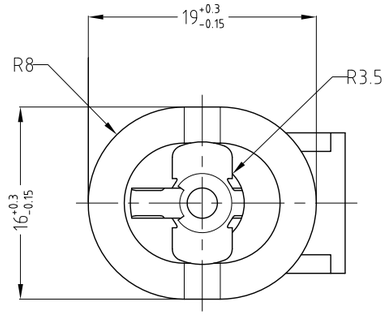

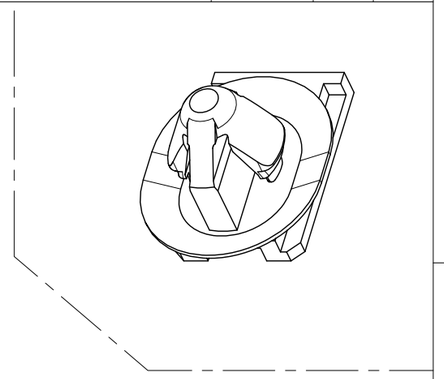

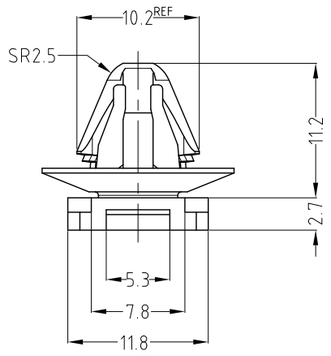

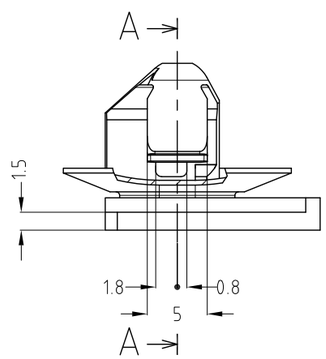

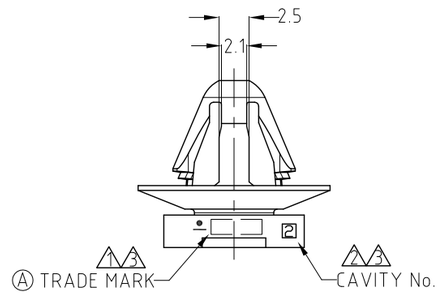

PANEL HOLE

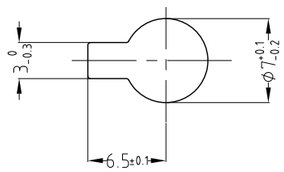

PANEL THIN NESS: 1st LOCK(0.7~1.0mm)
2st LOCK(1.0~1.6mm)

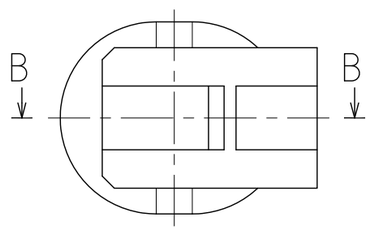

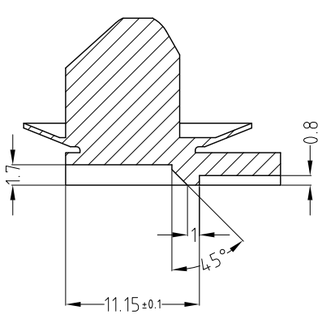

B-B

NOTE.
Ⓐ 1 TRADE MARK : ACCORDING TO 1-15994-3
2 CAVITY MARK
3 CHARACTERS 1.5 HEIGH AND 0.5 RASIDE INSIDE 0.5mm

936551-2	BLACK	↓
936551-1	NATURIAL	NYRON 66
PART NO.	COLOR	MATERIAL

THIS DRAWING IS CONTROLLED DOCUMENT FOR AMP INCORPORATED.

DIMENSIONS: MM

3rd ANGLE PROJECTION

TOLERANCES UNLESS OTHERWISE SPECIFIED:
0 <XX<10 ± 0.2
10<XX<30 ± 0.25
30<XX ± 0.3
ANGLES ± 3°

MATERIAL: SEE TABLE

FINISH

DWN JH CHO
CHK KT LIM
APVD HG CHO
PRODUCT SPEC ---
APPLICATION SPEC ---
WEIGHT ---

TE Connectivity

NAME: CLIP HSG FOR .090II MLC(φ7 KEY HOLE)

SIZE A3 | CAGE CODE 00779 | DRAWNING NO C- 936551

SCALE 2 : 1 | SHEET 1 OF 1 | REV A

1470-19 (3/11)