NUMBER 176264

3rd ANGLE PROJECTION

METRIC

CONFIDENTIAL INFORMATION

DIMENSIONS IN MILLIMETERS. DO NOT SCALE PRINT

PRINT DIST

NOTES;

1. MATERIAL — HOUSING: THERMOPLASTIC, UL 94V-0. POST: BRASS
2. FINISH — CONTACT AREA, "D" MIN Au ON NICKEL 0.0013 MIN ALL OVER. POST TINE: 0.002 MIN TIN-LEAD
3. POST POSITION NUMBERS FOR REFERENCE ONLY.

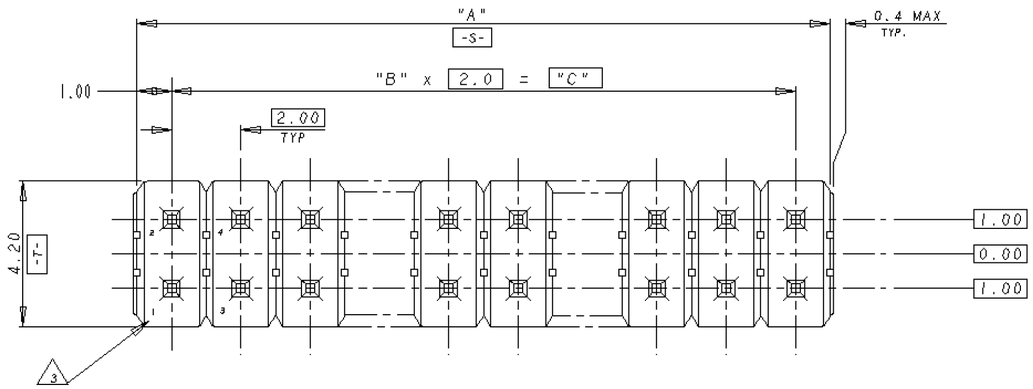

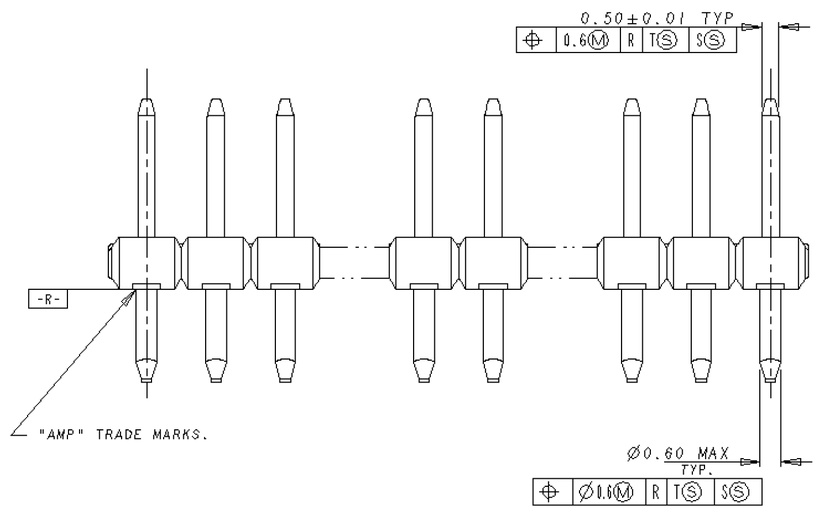

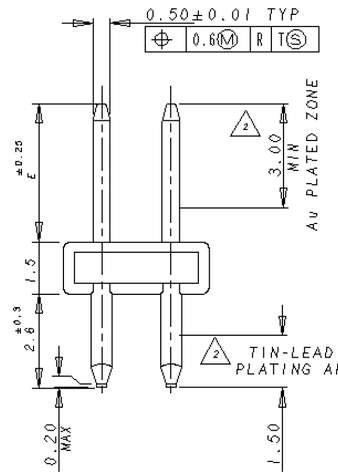

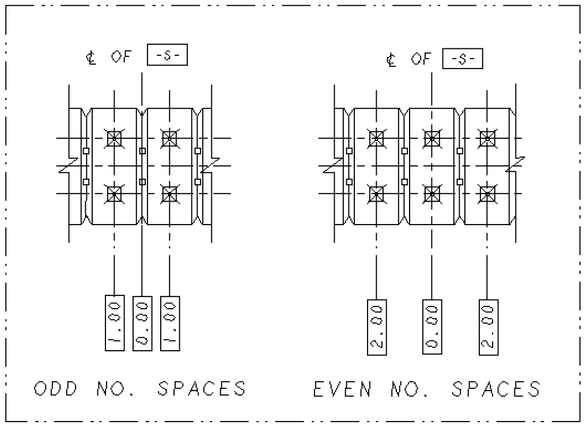

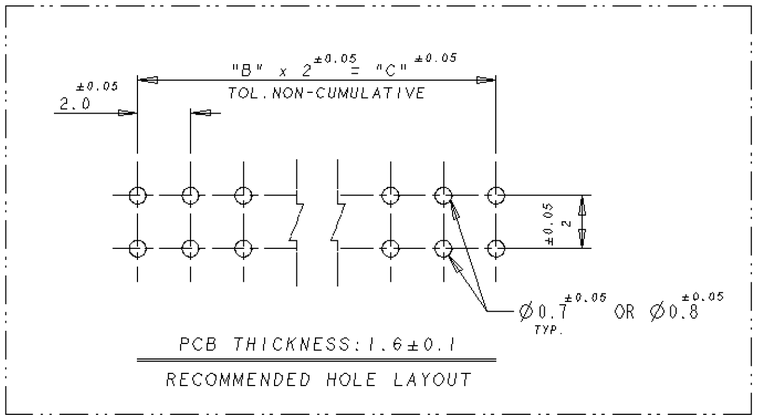

	17	4.00	0.00076	24	12	26	26	5-	-7
	9, 10	5.00	0.00076	24	12	26	26	5-	-6
	1, 14		0.00076	14	7	16	16	5-	-5
	1, 12		0.00076	10	5	12	12	5-	-4
	NIL		0.00076	—	—	2	2	5-	-3
	25		0.00076	48	24	50	50	5-	-2
	25		0.0002	48	24	50	50	5-	-1
OBSOLETE	2, 19		0.00076	18	9	20	20	5-	-0
	NIL		0.0002	—	—	2	2	4-	-9
				48	24	50	50	4-	-8
				46	23	48	48	4-	-7
				44	22	46	46	4-	-6
				42	21	44	44	4-	-5
OBSOLETE				40	20	42	42	4-	-4
				38	19	40	40	4-	-3
				36	18	38	38	4-	-2
				34	17	36	36	4-	-1
OBSOLETE			0.00076	32	16	34	34	4-	-0
				48	24	50	50	3-	-9
OBSOLETE				46	23	48	48	3-	-8
				44	22	46	46	3-	-7
				42	21	44	44	3-	-6
OBSOLETE				40	20	42	42	3-	-5
				38	19	40	40	3-	-4
OBSOLETE				36	18	38	38	3-	-3
				34	17	36	36	3-	-2
OBSOLETE			0.0002	32	16	34	34	3-	-1
				30	15	32	32	3-	-0
				28	14	30	30	2-	-9
OBSOLETE				26	13	28	28	2-	-8
				24	12	26	26	2-	-7
				22	11	24	24	2-	-6
				20	10	22	22	2-	-5
				18	9	20	20	2-	-4
				16	8	18	18	2-	-3
				14	7	16	16	2-	-2
				12	6	14	14	2-	-1
				10	5	12	12	2-	-0
				8	4	10	10	1-	-9
				6	3	8	8	1-	-8
				4	2	6	6	1-	-7
			0.00076	2	1	4	4	1-	-6
				30	15	32	32	1-	-5
				28	14	30	30	1-	-4
				26	13	28	28	1-	-3
OBSOLETE				24	12	26	26	1-	-2
				22	11	24	24	1-	-1
				20	10	22	22	1-	-0
				18	9	20	20		-9
				16	8	18	18		-8
				14	7	16	16		-7
				12	6	14	14		-6
				10	5	12	12		-5
				8	4	10	10		-4
				6	3	8	8		-3
				4	2	6	6		-2
	NIL	4.00	0.0002	2	1	4	4	176264-1	
STATUS	PIN OMITTED	"E"	"D"	"C"	"B" SPACES	"A"	POS	P/N	

LTR	REVISION RECORD	DR	CHK	DATE
K	REVISED FP00-0055-99	LWY	LSC	31MAY00
J	REVISED FP00-0004-98	LWY	CL	7JAN98
H	REVISED FP00-0163-96	LWY	TWM	3JUL96
G	REVISED FP00-0215-95	LWY	TAP	2AUG95
F	REVISED FP00-0191-95	LMK	TAP	11JUL95
E2	REVISED FP00-0045-95	LWY	CWK	27FEB95
E1	REVISED FP00-0006-95	RT	CWK	4JAN95
D	REVISED FP00-0136-94	LWY	CWK	19JUL94

© 1989 BY AMP MANUFACTURING (SINGAPORE) PTE. LTD.

AMP MANUFACTURING (SINGAPORE) PTE. LTD.

WIRE RANGE: — mm² (AWG -)
INSULATION DIA: — mmØ
MATERIAL: SEE NOTE 1
FINISH: SEE NOTE 2

DR. 8-JUL-'89 I. ENOMOTO
DE. 6-JUL-'88 I. ENOMOTO
CHK 8-JUL-'89 S. MANABE
APP. SF LEONG

NAME: AMPMODU 2MM PITCH POST HDR, VERTICAL MOUNT TYPE.

GENERAL TOLERANCE: 0<4 10 : ±0.2; 10<4 30 : ±0.25; 30<4 100 : ±0.3; ANGLES : ±3°

SIZE: A2 | LOC: DY | NUMBER: 176264
SCALE: 8-1 | REV.: K | SHEET: 1 OF 1

CUSTOMER DRAWING

AMP-1
REV.10/'88