| SIGN | DATE | DESCRIPTION | APPROVER |
|---|---|---|---|
| | | | |

*THIS IS CAD DRAWING, DO NOT REVISE MANUALLY!!!*

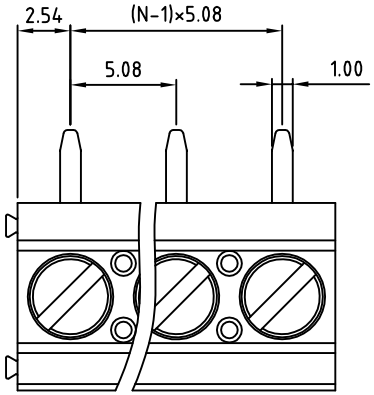


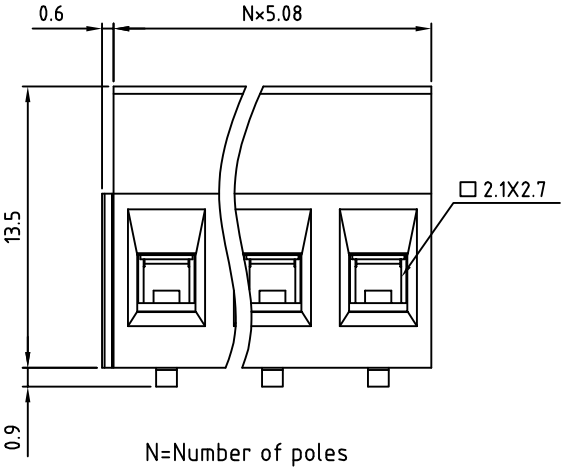


N=Number of poles

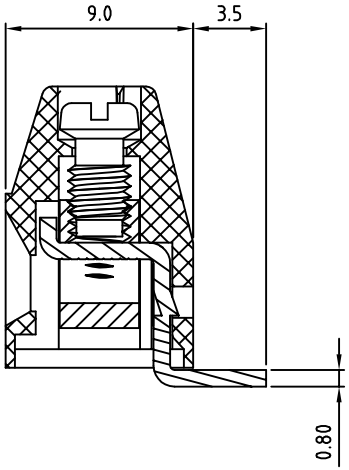


## Material

- Terminal body
- (metal housing): Brass(CuZn)
- Terminal screw: Steel Zinc plating "-" slot type
- Contacts: Brass
- Surface of solder tail: Tin plated
- Insulator (housing): Thermoplastic (UL94V-0)

## Electrical cULus/ FIMKO

- Voltage rating: 300VAC / 300VAC
- Current rating: 16A / 17.5A
- Wire range: 0.5-1.5mm$^2$
  Solid wire(AWG): 12-28
  Stranded wire(AWG): 12-28
- Torque: 3.5Lb-In / 0.4N.m
- Screw: M3
- Wire strip length: 6-7mm
- Withstanding Voltage: 1.6KV / 2.5KV
- Operating temperature: -30°C to +105°C
- Soldering temperature: 250°C±10°C/5 Sec
- Safety Approval:

RoHS Compliant

PART NUMBER:

OSTVIXX2150

No. of Poles
- 02: 2 Poles
- 03: 3 Poles
- ... ...
- 24: 24 Poles

COLOR:
- 0: Black
- 5: Green (Standard)
- 6: Blue
- 8: Grey

## P.C.B LAYOUT

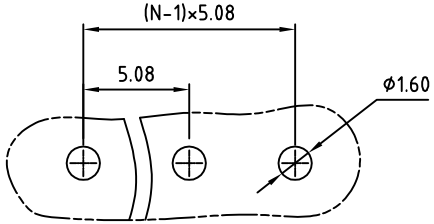


THESE DRAWINGS AND SPECIFICATIONS ARE THE PROPERTY OF ON-SHORE TECHNOLOGY, INC. AND SHALL NOT BE REPRODUCED, COPIED OR USED IN ANY MANNER WITHOUT THE PRIOR WRITTEN CONSENT OF ON-SHORE TECHNOLOGY, INC.

ON-SHORE TECHNOLOGY, INC.

| | | | | | |
|---|---|---|---|---|---|
| TITLE | OSTVI 5.08 SERIES 90° wire inlet | | | | |
| PART NO. | OSTVIXX2150 | | | DWG NO. | OSTVIXX2150.DWG |
| APPROVED | CHECKED | DESIGNED | DRAWN | CUST NO. | |
| Shi Jun 2006.10.20 | Marvin 2006.10.20 | Marvin 2006.10.20 | Marvin 2006.10.20 | UNIT: mm / SCALE: NONE / SHEET: 01/01 / REV.: E | |

| Tolerance | |
|---|---|
| X. | ±0.50 |
| X.X | ±0.30 |
| X.XX | ±0.10 |
| X° | ±1° |