THIS DRAWING IS UNPUBLISHED. RELEASED FOR PUBLICATION -,- .
© COPYRIGHT - By - ALL RIGHTS RESERVED.

LOC	DIST
AD	00

REVISIONS

P	LTR	DESCRIPTION	DATE	DWN	APVD
	D	REVISED PER ECO-12-010467	05JUL2012	SY	AC

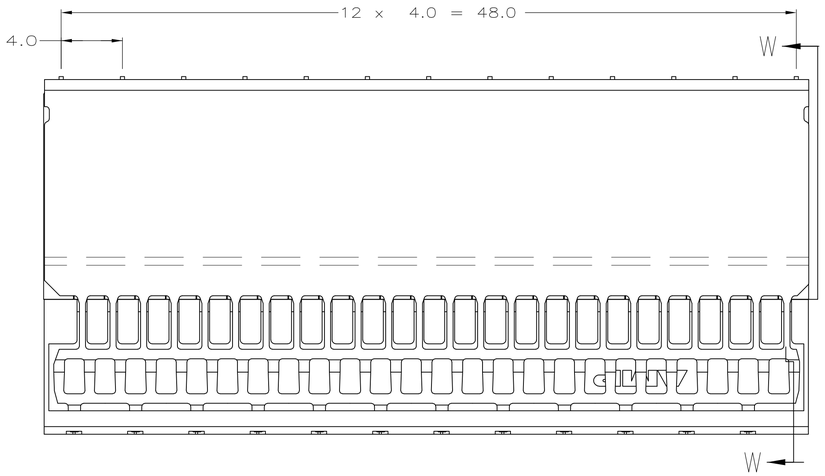

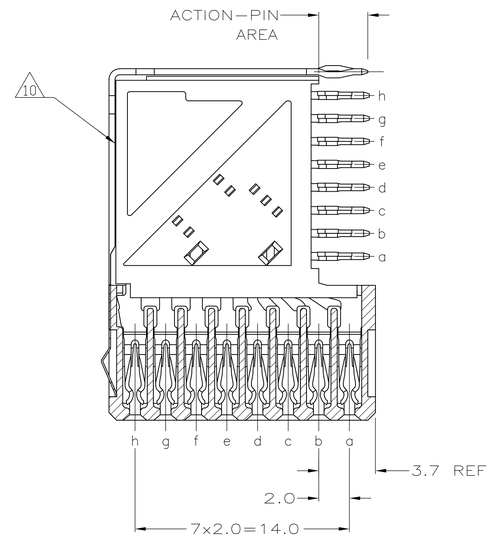

SECTION W-W

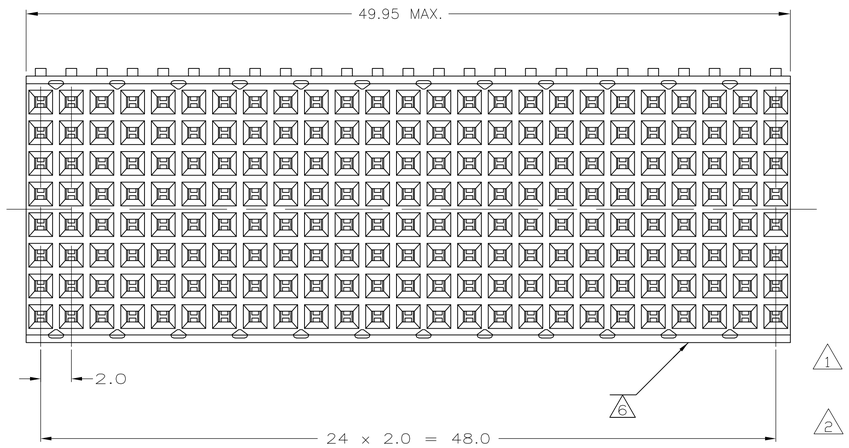

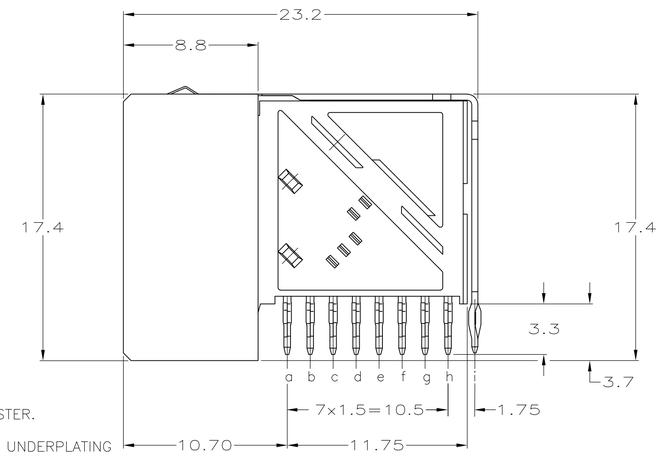

1. MATERIAL:
   CONTACT: PHOSPHOR BRONZE.
   HOUSING: GLASS-FILLED POLYESTER.
2. GENERAL PLATING SPECIFICATION: UNDERPLATING (ENTIRE CONTACT): 1.27µm MIN NICKEL AND ACTION PIN: 0.5µm MIN TIN.
   FOR PLATING OF MATING SURFACES SEE APPLICABLE SPECIFICATION REFERENCE FOR EACH DASH NUMBER.
3. CONFORMS TO ALL TESTING ACCORDING TO IEC 61076-4-101 PERFORMANCE LEVEL 2.
4. CONNECTOR TESTED AND QUALIFIED AGAINST TELCORDIA GR-1217-CORE QUALITY LEVEL 3, CENTRAL OFFICE APPLICATIONS.
5. CONNECTOR TESTED AND QUALIFIED AGAINST TELCORDIA GR-1217-CORE QUALITY LEVEL 3, UNCONTROLLED ENVIROMENT APPLICATIONS.
6. CONNECTOR MARKED WITH PART NUMBER AND DATE CODE. ADDITIONAL CHARACTERS OR MARKINGS, AS WELL AS THE LOCATION OF THE MARKINGS, MAY BE ADDED FOR TRACEABILITY BASED UPON MANUFACTURERS DISCRETION.
7. PLATED-THROUGH HOLES AT 2x1.5mm GRID 200 TOTAL HOLES.
8. ROW "i" 13 PLATED THROUGH HOLES FOR UPPERSHIELD.
9. CONNECTOR & SHIELD LUBRICATED WITH BELCORE APPROVED LUBRICANT, TECHNICAL REFERENCE: TR-NWT-001217 ISSUE 1, SEP 1992.
10. SHIELD MOUNTED ON CONNECTOR WITH DOUBLE SIDED ADHESIVE TAPE OR ADHESIVE.
11. OBSOLETE PARTS: OBSOLETE CIS STREAMLINING PER D.RENAUD/D.SINISI
12. 0.76um MIN GOLD PLATING AT MATING SURFACE.
13. CONFORMS TO ALL TESTING ACCORDING TO IEC 61076-4-101 PERFORMANCE LEVEL 1.

	FINISH	PART NUMBER
	2 13	5646487-4
	2 3 12	3-5646487-0
11 OBSOLETE	2 5 9	~~1-5646487-9~~
	2 4 9	5646487-9
	2 3	5646487-1

PCB HOLE DIMENSIONS

DRILLED HOLE	:0.7	±0,025 mm
FIN. HOLE	:0.55 TO 0.65	mm
Cu-thks	:0.025 TO 0.050	mm
SnPb-thks	:0.004 TO 0.010	mm

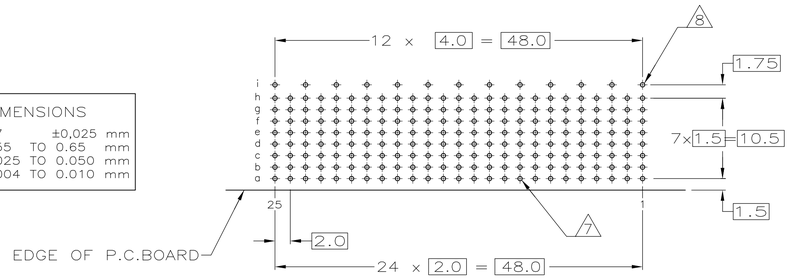

RECOMMENDED PCB HOLE LAYOUT
COMPONENT SIDE
SCALE 2.5:1

THIS DRAWING IS A CONTROLLED DOCUMENT.	DWN B.CARBO 28JUL05	TE Connectivity	
DIMENSIONS: mm	CHK G.SKIPPER 28JUL05	NAME R/A RECEPTACLE ASSY, 200 POSN Z-PACK 2mm HM, TYPE E W/GROUND RETURN SHIELD	
TOLERANCES UNLESS OTHERWISE SPECIFIED: 0 PLC ±, 1 PLC ±0.1, 2 PLC ±, 3 PLC ±0.2, 4 PLC ±, ANGLES ±	APVD G.SKIPPER 28JUL05		
	PRODUCT SPEC 108-19082		
	APPLICATION SPEC 114-19029	SIZE A1 / CAGE CODE 00779 / DRAWING NO C-5646487	RESTRICTED TO —
MATERIAL 1 / FINISH SEE TABLE	WEIGHT —		
	CUSTOMER DRAWING	SCALE 5:1 / SHEET 1 OF 1	REV D

4805 (3/11)