THIS DRAWING IS UNPUBLISHED. RELEASED FOR PUBLICATION 2009
© COPYRIGHT 2009 - ALL RIGHTS RESERVED.

LOC	DIST
A1	-

REVISIONS

P	LTR	DESCRIPTION	DATE	DWN	APVD
	D2	NEW ProE DRAWING (ECR-11-009831)	24OCT2011	Abr	Brun
	D3	LP Variants removed. ECR-13-015135	27SEP2013	Abr	Brun
	D4	SEE PCN E-19-011079	09DEC2019	MAH.	BERG
	D5	SEE PCN E-20-001102	03SEP2020	MAH.	BERG

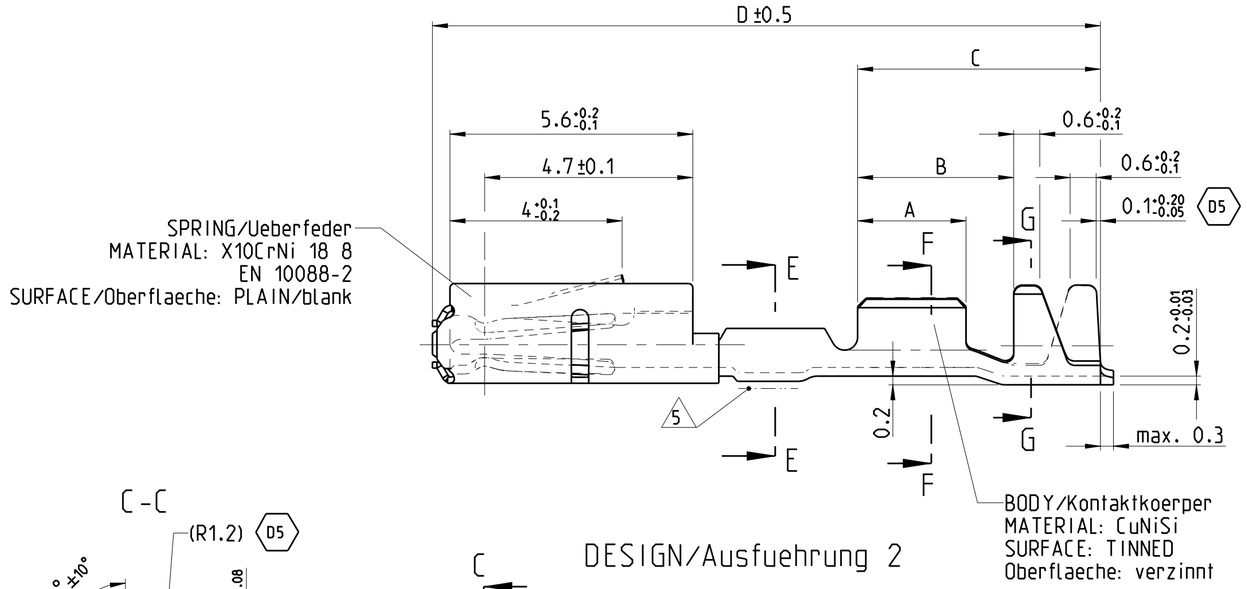

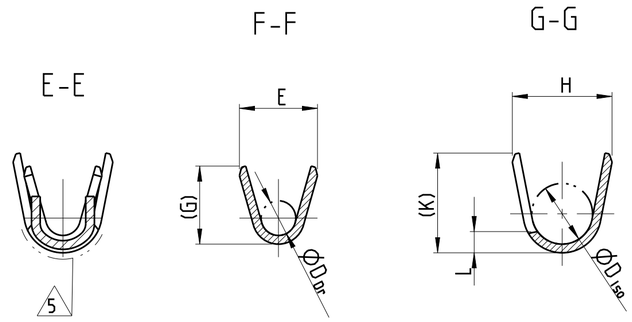

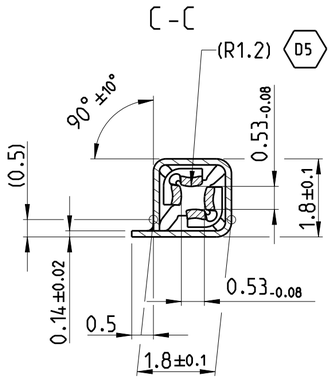

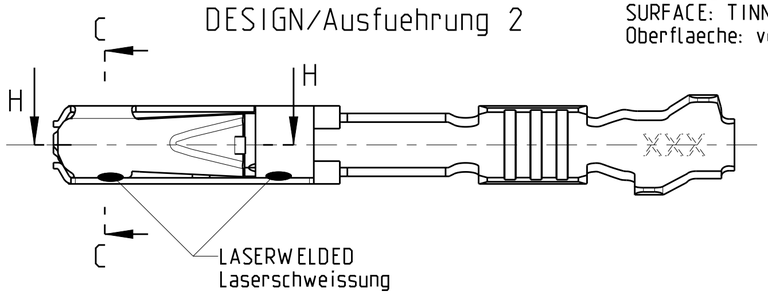

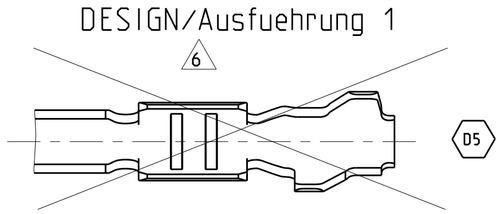

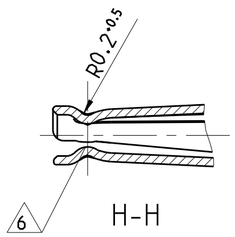

WITHOUT SPRING
ohne Ueberfeder

NOTES
Bemerkungen

1 DATE CODE (WEEK/YEAR E.G. WEEK NUMBER 18/ YEAR 2011 AND TE REVISION (E.G. REV.A)
Datumscode (Woche/Jahr z.B. KW 18/ Jahr 2011) und TE Revision (z.B.Rev. A)

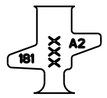

2 SUITABLE FOR PIN CONTACT SEE DRAWING: TE: 929453
Passend zu Stiftkontakt siehe Zeichnung: TE: 929453

3 FOR FLR-CONDUCTOR ACCORDING TO DIN 72551-6 ONLY
Nur fuer FLR-Leitung nach DIN 72551, Teil 6

4 DETAILS OF DESIGN ARE LEFT TO MANUFACTURER
Einzelheiten der Ausfuehrung bleiben dem Hersteller ueberlassen

5 SELECTIVELY GOLD PLATED
Selektiv vergoldet

6 NOT FOR NEW APPLICATION
nicht fuer Neuanwendung

D5 7 VARIANTS OF DESIGN1 ARE SUPERSEDED BY CORRESPONDING VERSIONS OF DESIGN2
Varianten von Design1 werden durch die entsprechenden Versionen von Design2 ersetzt

D5

5-1452013-1	A	1452013-1	C	0.5-0.75	Au	A= 2.8 B= 3.8 C= 5.6 D= 15.6	E= 2 G= 2.1 D Dr= 1	H= 2.7 K= 2.9 L = 0.7 D Iso= 1.6	0.13
5-968893-1	A	968893-1	D	0.25-0.35	Au	A= 2.5 B= 3.6 C= 5.6 D= 15.6	E= 1.8 G= 1.8 D Dr= 0.8	H= 2.3 K= 2.3 L = 0.6 D Iso= 1.4	0.13
ORDER NO. DESIGN BESTELL-NR. Ausfuehrung 2	REV.	ORDER NO. DESIGN BESTELL-NR. Ausfuehrung 6 1 7	REV.	DGB WIRE-SIZE-RANGE mm²	SURFACE CONTACT AREA OBERFLAECHE Kontaktzone	LENGTH Laenge	WIRE CRIMP Drahtcrimp	INSU. CRIMP Iso' crimp	WEIGHT Gewicht g
						DIMENSIONS/ Abmessungen mm			

THIS DRAWING IS A CONTROLLED DOCUMENT.

DIMENSIONS: mm

TOLERANCES UNLESS OTHERWISE SPECIFIED:
0 PLC ±
1 PLC ±
2 PLC ±0.2
3 PLC ±
4 PLC ±
ANGLES ±1°

MATERIAL -
FINISH -

DWN S. Garcia 15AUG2000
CHK R. Jetter 15AUG2000
APVD -
PRODUCT SPEC 108-18030
APPLICATION SPEC 114-18021
WEIGHT -

TE Connectivity

NAME
MQS
SOCKET CONTACT WITH SHORT CIRCUIT AREA
Buchsenkontakt mit Kurzschlussfederbereich

SIZE	CAGE CODE	DRAWING NO	RESTRICTED TO
A2	00779	C-1355983	-

CUSTOMER DRAWING | SCALE 10:1 | SHEET 1 OF 1 | REV D5