THIS COPY IS PROVIDED ON A RESTRICTED BASIS AND IS NOT TO BE USED IN ANY WAY DETRIMENTAL TO THE INTERESTS OF PANDUIT CORP.

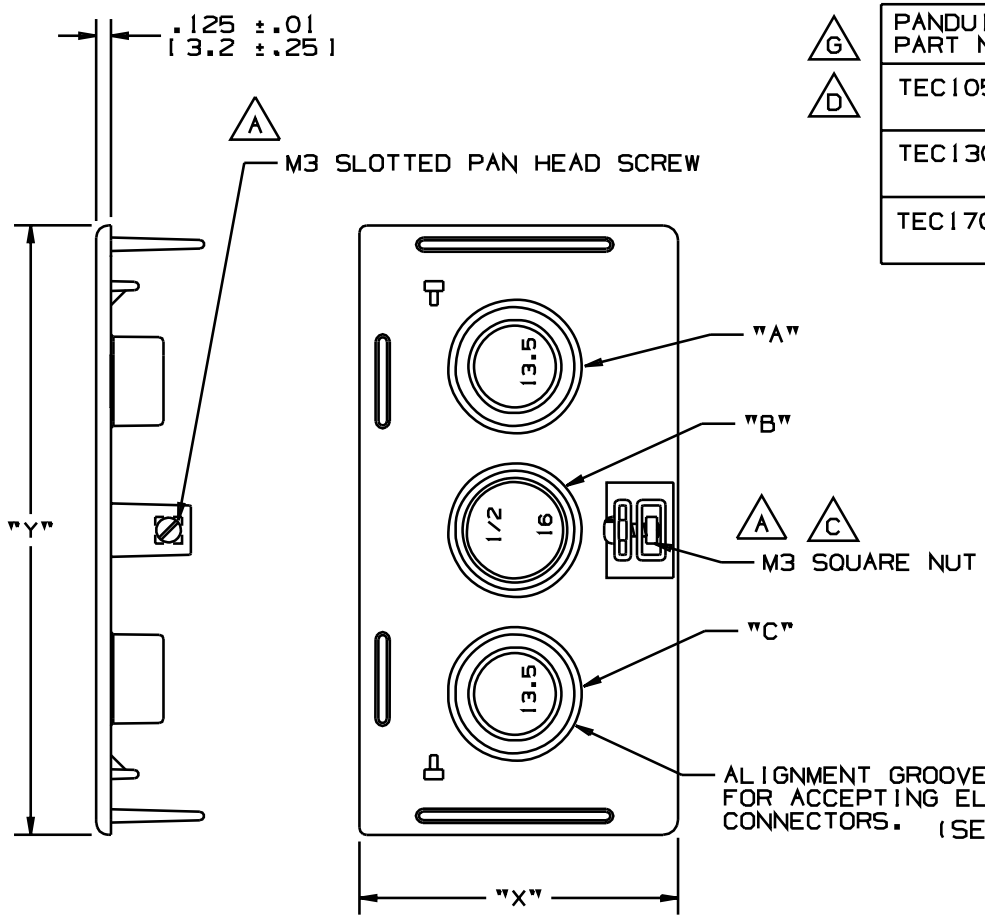

G PANDUIT PART NO. •	"X"	"Y"	F WEIGHT
D TEC105	2.68 ±.010 [68 ±.25]	4.13 ±.020 [105 ±.5]	.062 lbs 28 grams EACH
TEC130	2.68 ±.010 [68 ±.25]	5.12 ±.020 [130 ±.5]	.073 lbs 33 grams EACH
TEC170	2.68 ±.010 [68 ±.25]	6.70 ±020 [170 ±.5]	.097 lbs 44 grams EACH

NOTES:

• 1. SEE CURRENT CATALOG FOR ADDITIONAL PART NUMBER SUFFIXES TO INDICATE COLOR AND OR PACKAGE QUANTITY.

A 2. FOR SECURING END CAP TO TRUNKING. A M3 SLOTTED PAN HEAD SCREW AND M3 SQUARE NUT ARE PROVIDED.

3. ALIGNMENT GROOVES ARE INTENDED FOR USE WITH THE FOLLOWING CONNECTORS SIZES:

D	ALIGNMENT GROOVES "A"	"B"	"C"
TEC105	13.5MM ONLY	1/2", 16MM, 3/4"	13.5MM ONLY
TEC130	13.5MM, 3/4"	1/2", 16MM, 3/4"	13.5MM, 3/4"
TEC170	13.5MM, 3/4"	1/2", 16MM, 3/4"	13.5MM, 3/4"

DIMENSIONS IN PARENTHESIS ARE IN MILLIMETERS

CAD FILENAME/LAYERS: DPC_34315_TEC_TD_TRUNK_04

PANDUIT CORP. TINLEY PARK, ILLINOIS

END CAP FITTING FOR TYPE "T" TRUNKING (TEC105, TEC130, TEC170) CUSTOMER DRAWING

B D

UNLESS OTHERWISE SPECIFIED, DIMENSIONAL TOLERANCES ARE:
(.X) ± (.XXX) ±
(.XX) ± ANGLES ±

UNLESS OTHERWISE SPECIFIED, ALL DIMENSIONS ARE GIVEN IN INCHES, THIRD ANGLE PROJECTION.

DRAWN BY: DW
DATE: 7-17-92
CHECKED BY: CEF
MAT'L: ABS/PC E
SCALE: NONE
DRAWING NO.: 34315-22
DWG SIZE: A

REV	DATE	BY	CHK	DESCRIPTION	ECN	CHK	CUST	SUP
5	07-16-97	TA		G. ADDED ENGLISH DIMENSION	34315-22			
4	3-5-97	RCA	CEF	E. ADDED MAT'L ABS/PC. F. CHANGED WEIGHTS.	34315-22	CEF	CEF	
3	11-29-95	JBA	CEF	D. REV'D P/N'S.	34315-22	CEF		
2	12-8-94	DW	CEF	C. CORRECTED LABEL WAS MS SQUARE NUT.	34315-22	CEF		
1	12-5-94	DW	CEF	B. REV'D TITLE BLOCK WAS TD-TRUNKING. A. REV'D FASTENER WAS SET SCREW	34315-22	CEF		
R	11-5-92	DW	CEF	RELEASED TO PRODUCTION	34315-22	CEF		