THIS DRAWING IS UNPUBLISHED. RELEASED FOR PUBLICATION -,- .
© COPYRIGHT - By - ALL RIGHTS RESERVED.

LOC	DIST
AF	50

REVISIONS

P	LTR	DESCRIPTION	DATE	DWN	APVD
	D	REVISED PER ECR-12-013518	26NOV2012	KH	PD

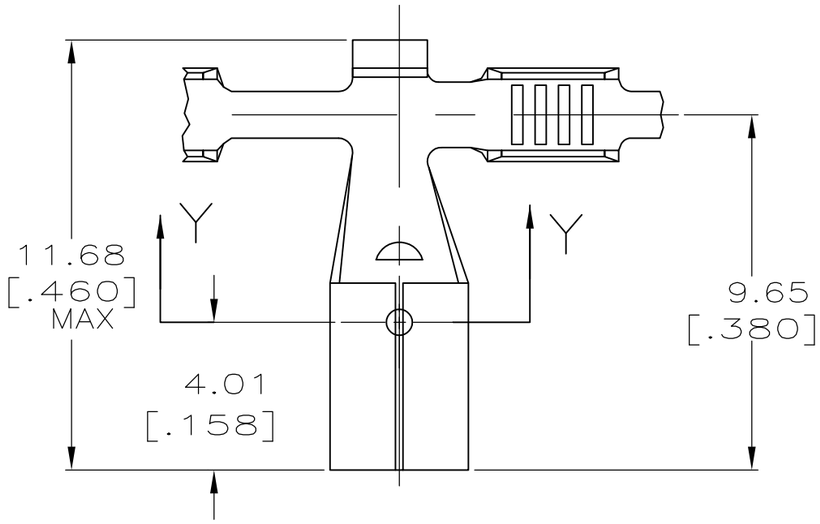

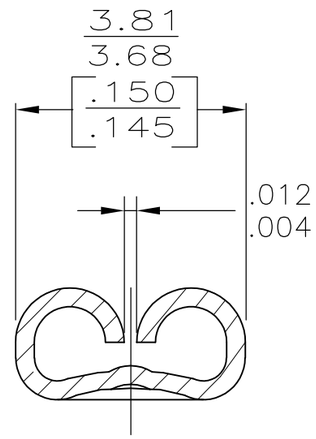

SECTION Y-Y
SCALE 10:1

1 CONTINUOUS STRIP ON REELS

2 MATING TAB THK IS 0.813±0.025 [.032±.001].

3 WIRE SIZE IS [22-18] AWG.

4 INSULATION RANGE IS 1.65-2.54 [.065-.100] DIA

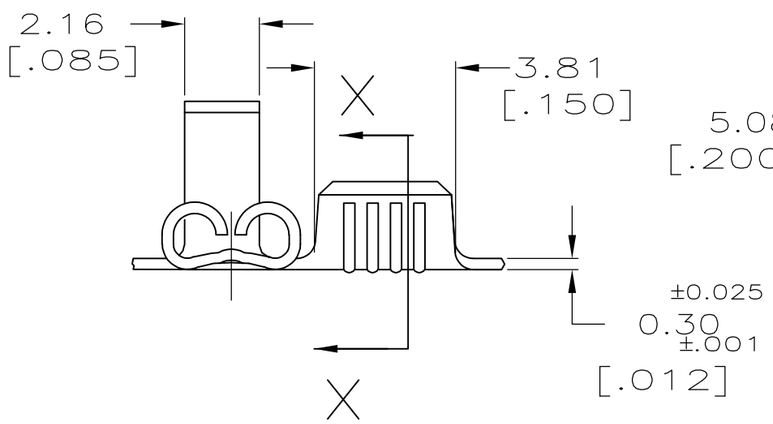

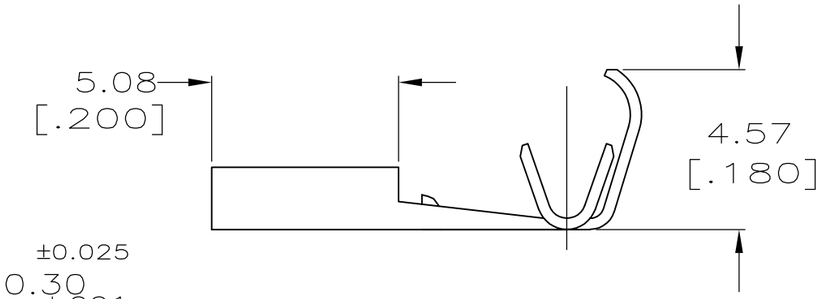

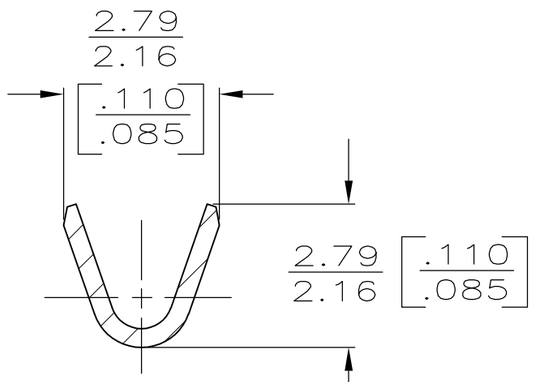

SECTION X-X
SCALE 10:1

1217878-1
PART NUMBER

THIS DRAWING IS A CONTROLLED DOCUMENT.

DIMENSIONS: mm [INCHES]

TOLERANCES UNLESS OTHERWISE SPECIFIED:

0 PLC	± -
1 PLC	± -
2 PLC	± 0.25[.010]
3 PLC	± -
4 PLC	± -
ANGLES	± -

MATERIAL: BRASS
FINISH: TIN

DWN MICHAEL S. FEHER 24SEP2002
CHK PETE DESANTIS 24SEP2002
APVD PETE DESANTIS 24SEP2002
PRODUCT SPEC —
APPLICATION SPEC —
WEIGHT —

TE Connectivity

NAME: RECEPTACLE, FASTON, FLAG, 2.79[.110] SERIES —

SIZE	CAGE CODE	DRAWING NO	RESTRICTED TO
A3	00779	C-1217878	—

CUSTOMER DRAWING

SCALE	SHEET	REV
6:1	1 OF 1	D