THIS DRAWING IS UNPUBLISHED. RELEASED FOR PUBLICATION -,- .
© COPYRIGHT - BY TYCO ELECTRONICS CORPORATION. ALL RIGHTS RESERVED.

LOC	DIST
AJ	16

REVISIONS

P	LTR	DESCRIPTION	DATE	DWN	APVD
	K	REVISED PER ECO-10-008441	22MAY10	HMR	KW

1. COPPER ALLOY

2. SILVER PLATE PER QQ-S-365, 5.08 µm [.000200] MIN THICKNESS

3. TIN-LEAD PLATE PER ASTM B 545, 2.54 µm [.000100] MIN THICKNESS, WITH SUPPLEMENTAL ANTI FRETTING LUBRICANT

4. MATTE TIN PLATE PER MIL-T-10727, 2.54 µm [.000100] MIN THICKNESS, WITH SUPPLEMENTAL ANTI FRETTING LUBRICANT

5. NON-MAGNETIC

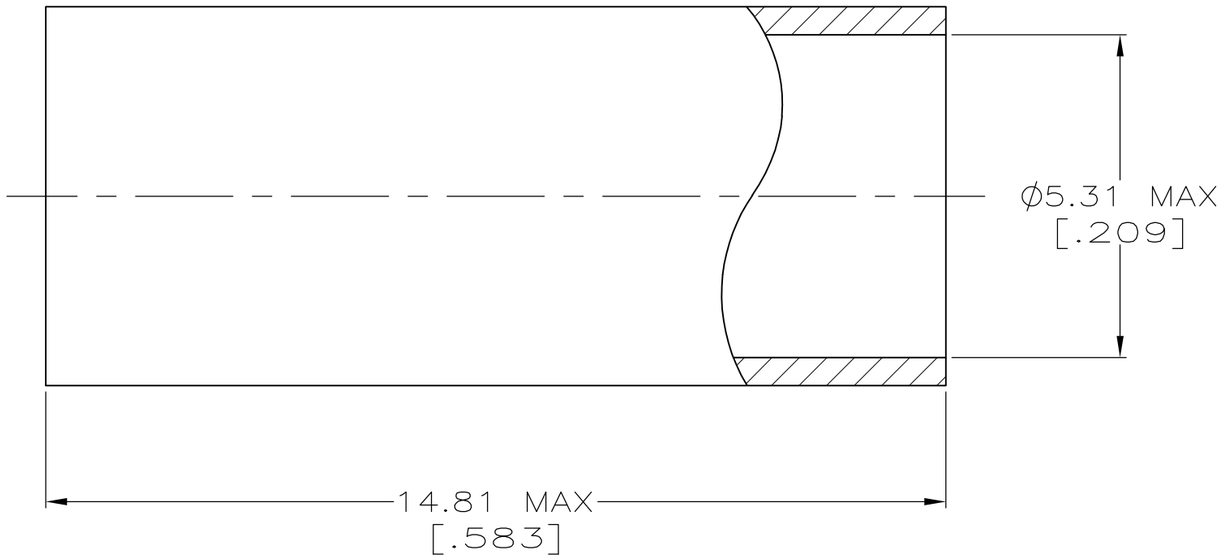

FINISH	PART NUMBER
4	9-225381-0
5 2	225381-7
3	225381-3
2	225381-2

THIS DRAWING IS A CONTROLLED DOCUMENT.

DIMENSIONS: mm [INCHES]

TOLERANCES UNLESS OTHERWISE SPECIFIED:
0 PLC ± -
1 PLC ± -
2 PLC ± -
3 PLC ± -
4 PLC ± -
ANGLES ± -

MATERIAL: SEE NOTES

FINISH: SEE NOTES

DWN MICHAEL E. COWHER 14NOV95
CHK FRANK MORANA 14NOV95
APVD FRANK MORANA 14NOV95
PRODUCT SPEC —
APPLICATION SPEC —
WEIGHT —

Tyco Electronics

Tyco Electronics Corporation
Harrisburg, PA 17105-3608

NAME: FERRULE

SIZE	CAGE CODE	DRAWING NO	RESTRICTED TO
A3	00779	C-225381	—

CUSTOMER DRAWING

SCALE	SHEET	REV
10:1	1 OF 1	K

AMP 1470-19 REV 31MAR2000