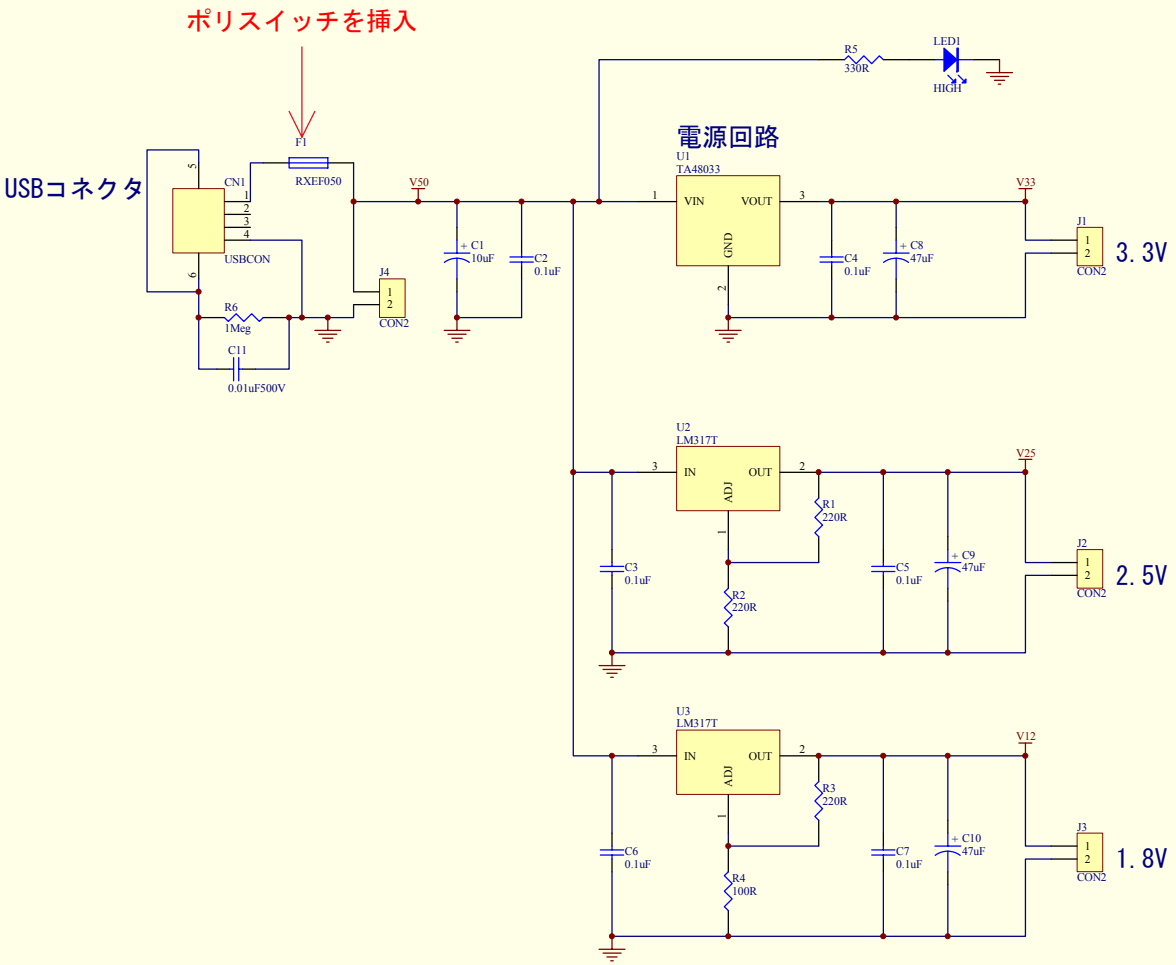

(C)Copyright 2007, TokushuDenshikairo Inc.

Title	USB Multi Power Source	
Size A3	Number NP1018_2	Revision 1.0
Date: 17-Oct-2007		Sheet of 1/1
File: C:\naitou\np1018\%ofl~H□}(FIX)\np1018.ddb		Drawn By: Naitou R.