SHEET OF

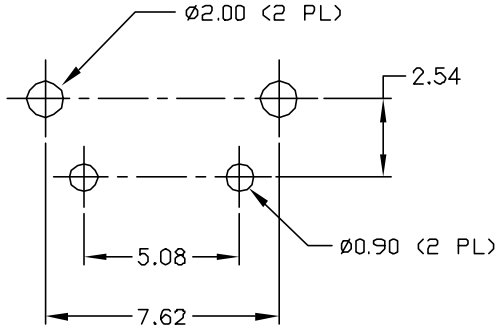

RECOMMENDED P.C.B. LAYOUT

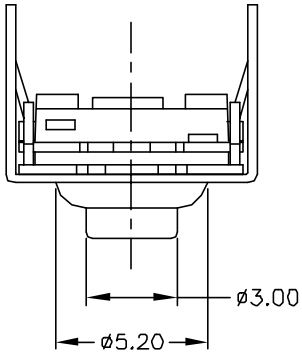

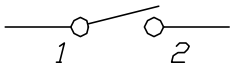

CIRCUIT: SPST

CONTACT CONFIGURATION

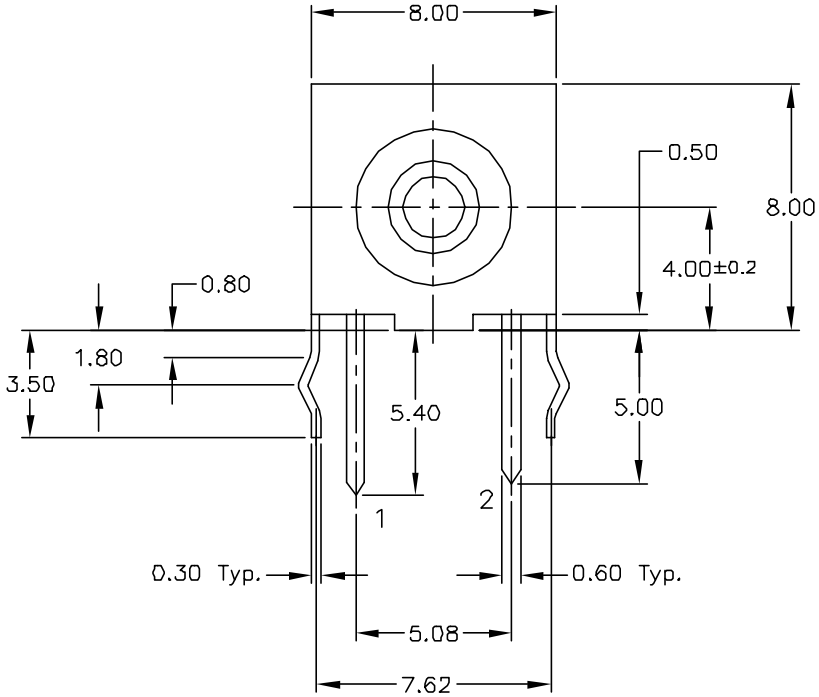

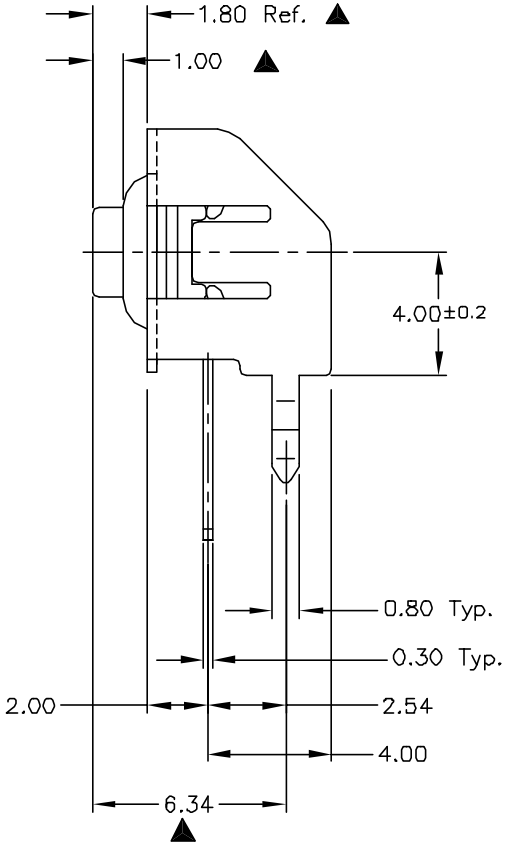

NOTES:

1. ALL DIMENSIONS IN MM
2. GENERAL TOLERANCE: X.X=±0.4
   X.XX=±0.25
3. TERM. NOS. FOR REF. ONLY
4. ▲ ACTUATION FORCE: 300±40gf
5. TRAVEL TO MAKE: 0.3mm +0.4/−0.0
6. RATING: 30mA, @12V DC
7. CONTACT RESISTANCE: 50 milli−ohms typical
8. DIELECTRIC STRENGTH: 300V RMS min at sea level.
9. ELECTRICAL LIFE CYCLE: 1,000,000 make & break cycles at full load.
10. ▲ DESIGNATE MAJOR DIMENSIONS

REV.	ECN No.	DESCRIPTION	DATE	CHKD
A	11381	RELEASED FOR PRODUCTION	4/9/01	CJB

THE INFORMATION CONTAINED IN THIS DOCUMENT IS PROPRIETARY TO E-SWITCH AND IS NOT TO BE COPIED OR TRANSFERRED

E-SWITCH®

TITLE: GS 6.34 F300 QR
Right angle washable tact switch

SCALE	DATE	DR	DWG	REV
4:1	4/9/01	CJB	L300003	A