THIS DRAWING IS UNPUBLISHED. RELEASED FOR PUBLICATION -,- .
© COPYRIGHT - By - ALL RIGHTS RESERVED.

LOC	DIST
GP	00

REVISIONS

P	LTR	DESCRIPTION	DATE	DWN	APVD
	G1	REVISED PER ECR-15-007038	01OCT2015	NK	PQ

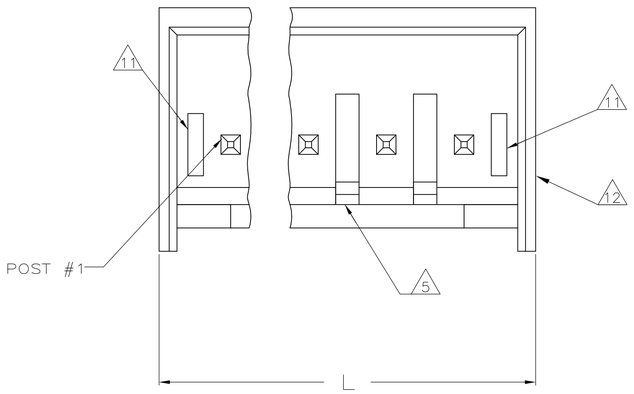

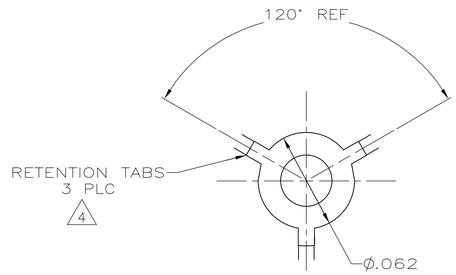

VIEW A–A
SCALE 20:1

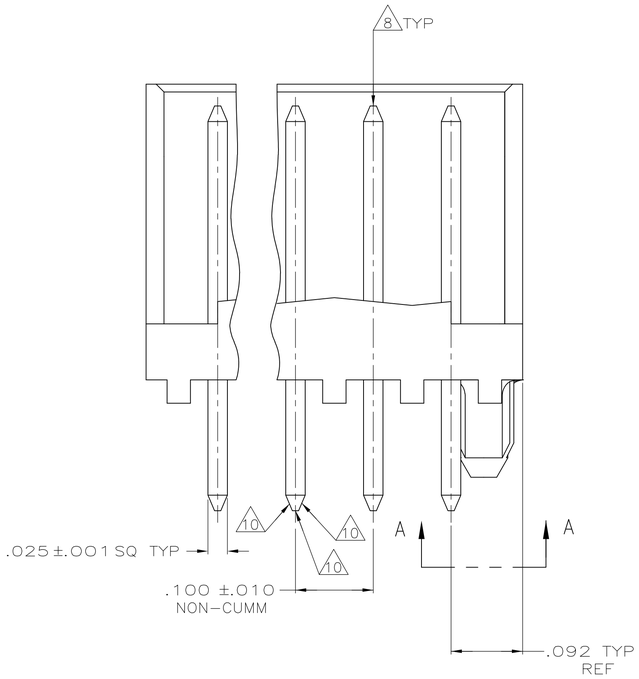

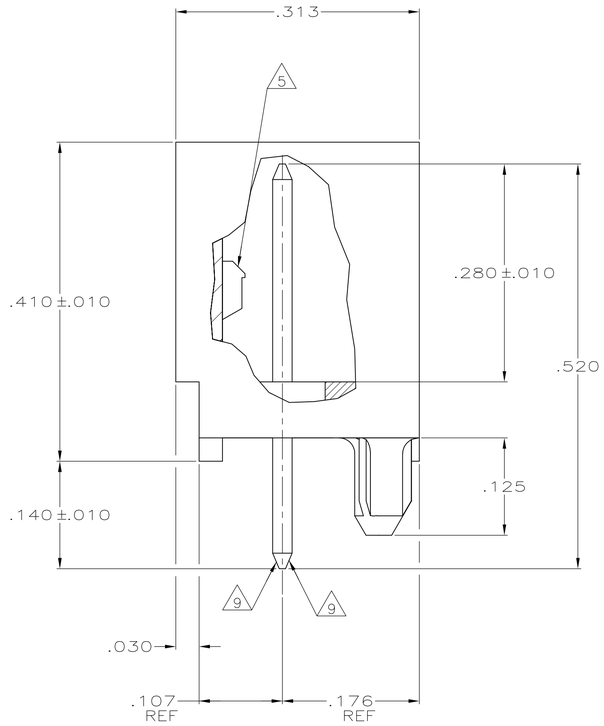

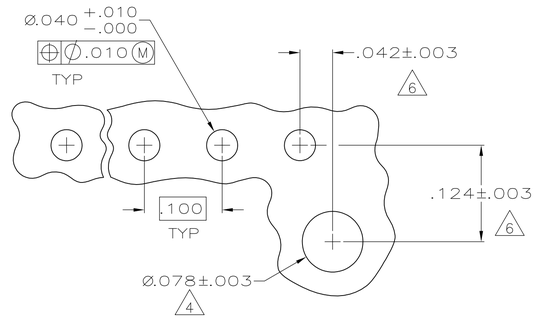

RECOMMENDED MOUNTING HOLE PATTERN
FOR .063 THK PRINTED CIRCUIT BOARD 2

1. MATERIAL: HEADER – POLYESTER UL94V–0 (BLACK)
   POST – COPPER ALLOY.
2. SOLDER SIDE OF P.C. BOARD SHOWN.
3. PARTS COMPLY WITH AMP SOLDERABILITY SPEC 109–11–2.
4. THE RETENTION TABS PROVIDE A ONE–TIME INTERFERENCE FIT IN THE .078 DIAMETER BOARD HOLE FOR HEADER ASSEMBLY RETENTION DURING SOLDERING.
5. LATCH DETENT FEATURE OCCURS 2 PLACES ON EACH END (MAXIMUM OF FOUR PER PART). FOR 2 THRU 5 CIRCUIT HEADERS, LATCH FEATURE OCCURS BETWEEN EACH CIRCUIT.
6. COORDINATE DIMENSION APPLIES FROM CENTER OF ACTUAL FEATURE.
7. POST: 93/7 BRIGHT TIN–LEAD PLATING (–2 THRU –14) OR 100% MATTE TIN PLATING (–32 THRU –44).
8. POST MUST WITHSTAND 3.0 LBS (13.34 NEWTONS) MIN FORCE WITHOUT DISLODGING, EITHER DIRECTION.
9. TWO SIDES OF TAPER, AS SHOWN, MUST BE PLATED. TYPICAL, BOTH ENDS.
10. TWO SIDES OF TAPER, AS SHOWN, AND TIP MAY BE UNPLATED. TYPICAL, BOTH ENDS.
11. SLOTS MAY OR MAY NOT APPEAR ON THESE PARTS.
12. UL RECOGNIZED (UR) LOGO AND CSA LOGO WILL APPEAR ON THE SIDE OF THE PART. THE AMP LOGO MAY APPEAR ON THE SIDE OR ON BOTTOM OF PART.
13. OBSOLETE

L IN	L MM	NO OF POSITIONS	PART NUMBER
1.484	37.69	14	4–644893–4
1.384	35.15	13	4–644893–3
1.284	32.61	12	4–644893–2
1.184	30.07	11	4–644893–1
1.084	27.53	10	4–644893–0
.984	24.99	9	3–644893–9
.884	22.45	8	3–644893–8
.784	19.91	7	3–644893–7
.684	17.37	6	3–644893–6
.584	14.83	5	3–644893–5
.484	12.29	4	3–644893–4
.384	9.75	3	3–644893–3
.284	7.21	2	3–644893–2
1.484	37.69	14	~~1–644893–4~~
1.384	35.15	13	~~1–644893–3~~
1.284	32.61	12	~~1–644893–2~~
1.184	30.07	11	~~1–644893–1~~
1.084	27.53	10	~~1–644893–0~~
.984	24.99	9	~~644893–9~~
.884	22.45	8	~~644893–8~~
.784	19.91	7	~~644893–7~~
.684	17.37	6	~~644893–6~~
.584	14.83	5	~~644893–5~~
.484	12.29	4	~~644893–4~~
.384	9.75	3	~~644893–3~~
.284	7.21	2	~~644893–2~~

13

HEADER ASSEMBLY

.030	0.76	.124	3.15	–	–
.025	0.64	.107	2.72	–	–
.010	0.25	.100	2.54	.520	13.21
.005	0.13	.092	2.34	.410	10.41
.003	0.08	.078	1.98	.313	7.95
.001	0.03	.063	1.60	.280	7.11
.000350	0.00889	.062	1.57	.176	4.47
.000150	0.00381	.042	1.07	.140	3.56
.000	0.00	.040	1.02	.125	3.18
IN	MM	IN	MM	IN	MM

CONVERSION TABLE

THIS DRAWING IS A CONTROLLED DOCUMENT.

DIMENSIONS: INCHES

TOLERANCES UNLESS OTHERWISE SPECIFIED:
0 PLC ± –
1 PLC ± –
2 PLC ± –
3 PLC ± .005
4 PLC ± –
ANGLES ± –

MATERIAL 1 | FINISH 7

DWN K. WHITAKER 24JUNE2005
CHK D. BOSSI 24JUNE2005
APVD D. BOSSI 24JUNE2005
PRODUCT SPEC —
APPLICATION SPEC —
WEIGHT —

TE Connectivity

NAME CST–100 SHROUDED HEADER ASSEMBLY, FRICTION LOCK, STRAIGHT POST, TIN OR TIN LEAD PLATED

SIZE A1 | CAGE CODE 00779 | DRAWING NO C–644893 | RESTRICTED TO —

CUSTOMER DRAWING | SCALE 10:1 | SHEET 1 OF 1 | REV G1

4805 (3/11)