THIS DRAWING IS UNPUBLISHED.
DIFFUSION RESTREINTE AMP
RELEASED FOR PUBLICATION 20
LIBRE A LA DIFFUSION
© COPYRIGHT 20 BY TYCO ELECTRONICS CORPORATION. ALL RIGHTS RESERVED.
TOUS DROITS RESERVES

LOC	DIST
F	7

REVISIONS

P	LTR REV	DESCRIPTION MODIFICATIONS	DATE	DWN DESS.	APVD APP.
	L	Redessine en CAO et revise EC 7462	31MARS98	O.L	-
	M	CLARIFICATION	09OCT2000	JJD	-

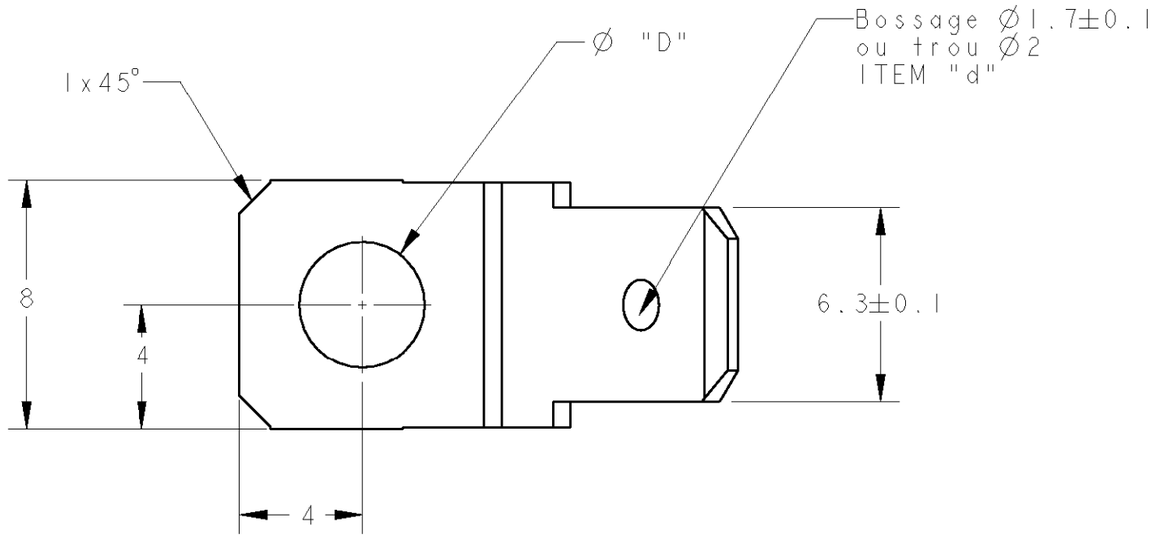

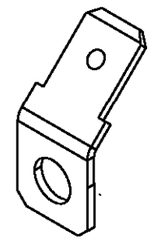

ECHELLE 2:1

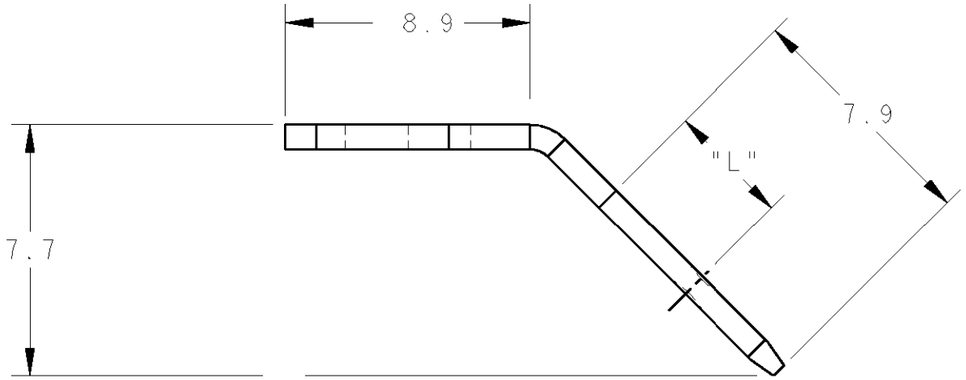

141158-1	dore	4.1	3	bossage
141036-1	brut	3.4	5.2	trou
140829-2	etame	3.4	3	trou
140829-1	brut	3.4	3	trou
140814-2	etame	3.4	4.1	trou
140814-1	brut	3.4	4.1	trou
140856-2	etame	4.1	3.7	bossage
140856-1	brut	4.1	3.7	bossage
140759-1	nickele	4.1	5.2	bossage
140759-0	etame	4.1	5.2	bossage
140665-0	brut	4.1	5.2	bossage
140660-0	etame	4.1	3	bossage
140659-0	brut	4.1	3	bossage
140598-0	etame	4.1	4.1	bossage
140597-0	brut	4.1	4.1	bossage
Reference	Finition	"L"	"D"	"d"

THIS DRAWING IS A CONTROLLED DOCUMENT FOR TYCO ELECTRONICS CORPORATION IT IS SUBJECT TO CHANGE AND THE CONTROLLING ENGINEERING ORGANIZATION SHOULD BE CONTACTED FOR THE LATEST REVISION.
CE PLAN EST UN DOCUMENT CONTROLE PAR AMP INCORPORATED. IL EST SUSCEPTIBLE D'ETRE REVISE. CONTACTER LE SERVICE TECHNIQUE D'AMP DE FRANCE POUR OBTENIR LA DERNIERE REVISION.

DIMENSIONS: mm

TOLERANCES UNLESS OTHERWISE SPECIFIED: TOLERANCES NON SPECIFEES (SUIV NB DE DECIMALES):
0 PLC/DEC: ±-
1 PLC/DEC: ±0.2
2 PLC/DEC: ±-
3 PLC/DEC: ±-
4 PLC/DEC: ±-
ANGLES ±30'

MATERIAL/MATIERE: LAITON

FINISH/FINITION: Voir tableau

DWN/DESSINE: O.LEMPEREUR 30MARS98
CHK/VERIFIE: G.ROBERT -
APVD/APPROUVE: Y.PETRONIN -
PRODUCT SPEC / SPEC. PRODUIT: -
APPLICATION SPEC / SPEC. APPLICATION: -
WEIGHT / MASSE APPROX.: -

AMP DE FRANCE
95301 PONTOISE

NAME / TITRE: FASTON TABS BENT 45 .250 series
LANGUETTE POUR CLIPS
-

SIZE FORMAT	CAGE CODE	DRAWING NO / No PLAN	RESTRICTED TO / RESERVE A
A3	00779	C-140597	-

CUSTOMER DRAWING /PLAN CLIENT UNIQUEMENT POUR REFERENCE | SCALE / ECHELLE 5:1 | SHEET / FEUILLE 1 OF / DE 1 | REV M

AMP 1470-19 REV 31MAR2000

Pro/ENGINEER DRAWING