C8051T612

25 MIPS, 8 kB EPROM, 10-Bit ADC, Mixed-Signal MCU

Analog Peripherals

10-Bit Analog to Digital Converter

- Up to 500 ksps
- 21 external inputs
- V_{REF} from external pin, V_{DD}, or internal regulator
- Built-in temperature sensor
- External conversion start input option

Comparator

- Programmable hysteresis and response time
- Configurable as interrupt or reset source
- Low current (< 0.5 µA)

Memory

- 1280 bytes internal data RAM
- 8kB byte-programmable EPROM code memory

On-Chip Debug

- C8051F310 can be used as in-system code development platform; complete development kit available
- On-chip debug circuitry facilitates full speed, non-intrusive in-system debug

Supply Voltage 1.8 to 3.6 V

- On-chip LDO regulator for core supply
- On-chip voltage supply monitor

Temperature Range: –40 to +85 °C

High-Speed 8051 µC Core

- Pipe-lined instruction architecture; executes 70% of instructions in 1 or 2 system clocks
- 25 MIPS peak throughput with 25 MHz clock
- Expanded interrupt handler

Digital Peripherals

- 29 port I/O; All 5 V tolerant with high sink current
- Hardware enhanced UART, SPI™, and SMBus™ serial ports
- Four general purpose 16-bit counter/timers
- 16-Bit programmable counter array (PCA) with five capture/compare modules
  - PWM
  - Rising / falling edge capture
  - Frequency output
  - Software timer

Clock Sources

- Internal oscillator: 24.5 MHz with ±2% accuracy supports UART operation
- External oscillator: CMOS clock or external capacitor
- Can switch between clock sources on-the-fly; useful in power saving modes

Package

- 32-pin LQFP

Development Kit: C8051T610DK

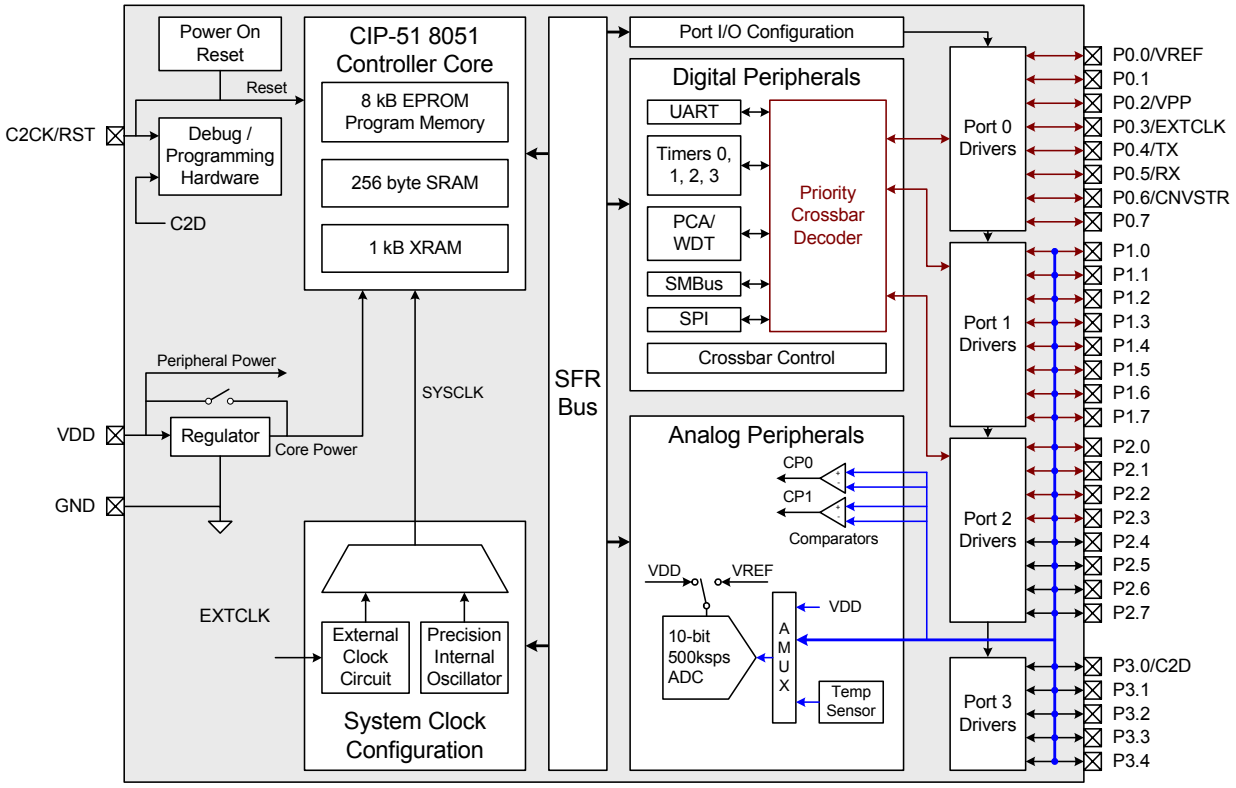

Copyright © 2007 by Silicon Laboratories