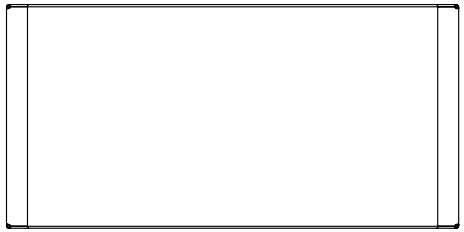

TOP OF ASSEMBLY

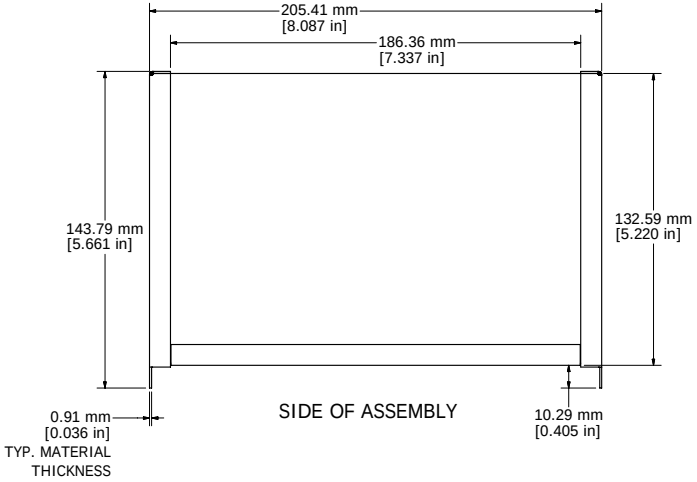

SIDE OF ASSEMBLY

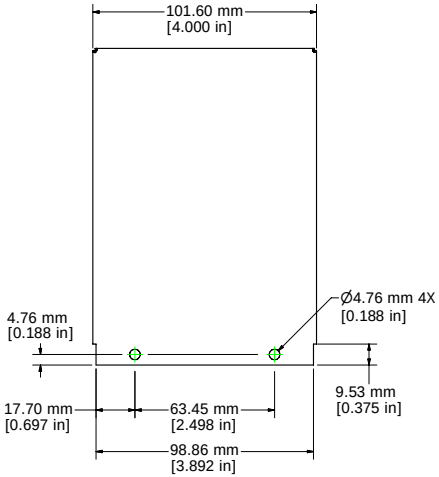

END OF ASSEMBLY

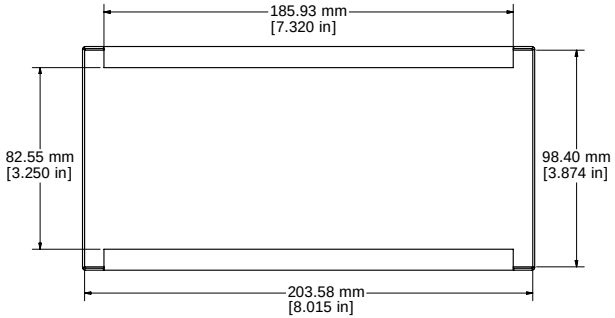

BOTTOM OF ASSEMBLY

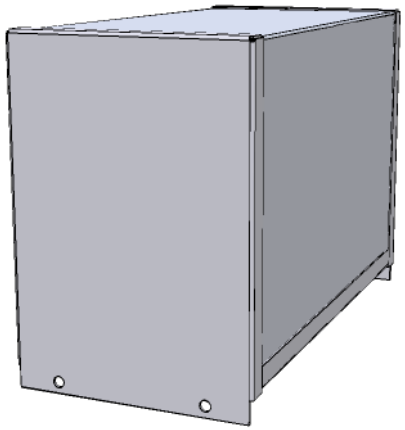

Note:

Enclosures can be Factory Modified (Milling, Drilling, Printing etc.)
Contact Factory mjm@hammondmfg.com for quotes
Solid models of this enclosure available in STEP or IGES Format.

1451-10
Material: 20ga. Welded Steel, Gray color
Cover: Perforated Steel
Screws: 4 Supplied (#6-32 X 1/4" self tap)
For use with 1441 and 1444 series chassis.

HAMMOND MANUFACTURING™

1451-10

www.hammondmfg.com