THIS DRAWING IS UNPUBLISHED. RELEASED FOR PUBLICATION -
© COPYRIGHT - BY - ALL RIGHTS RESERVED.

| LOC | DIST |
|---|---|
| - | - |

REVISIONS

| P | LTR | DESCRIPTION | DATE | DWN | APVD |
|---|---|---|---|---|---|
| | B | REV PER ECO 13-001557 | 2-12-13 | CT | DM |
| | C | REVISED PER ECO-15-013009 | 03DEC15 | RS | CT |

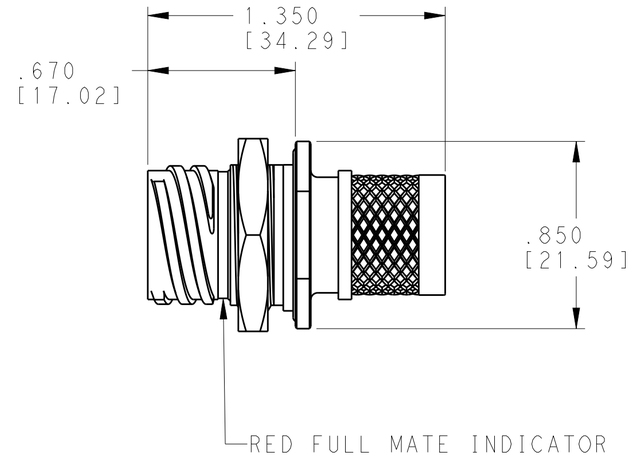


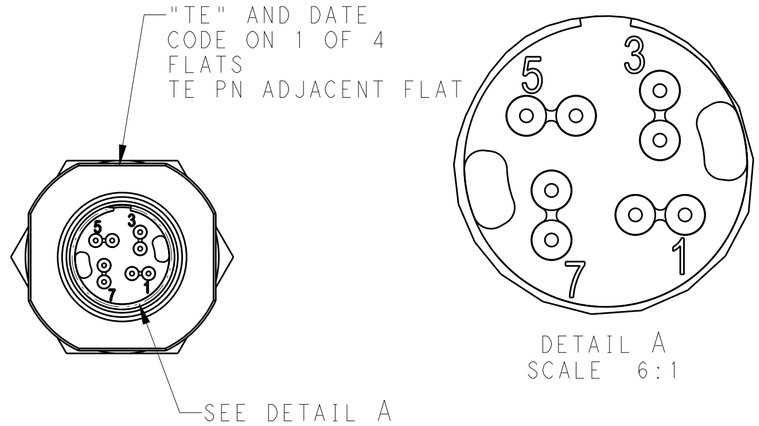


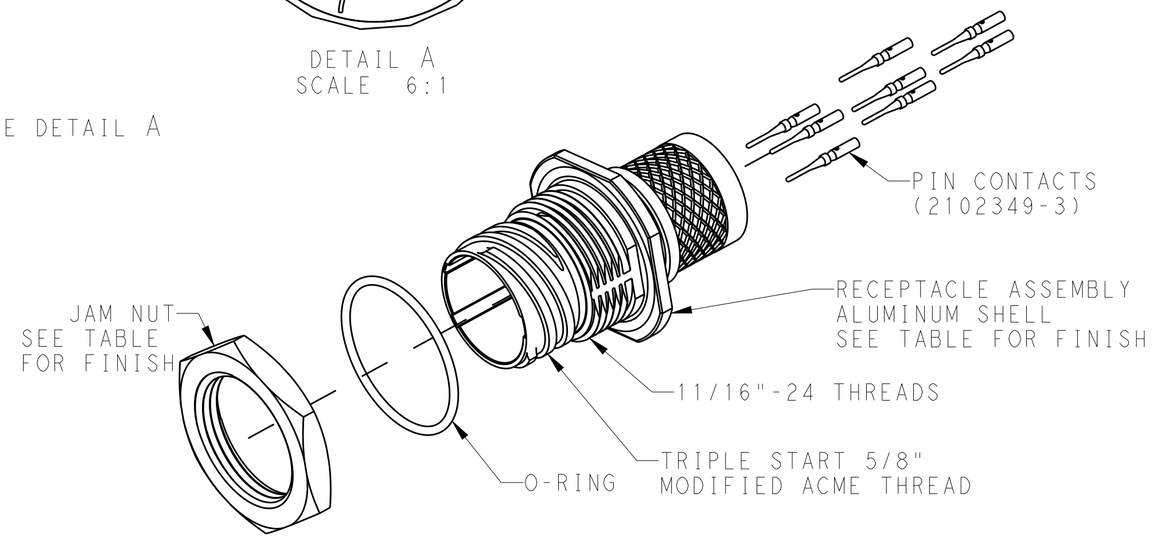


| KEY OPTION | KEY ROTATION "R" | KEY ROTATION "S" |
|---|---|---|
| NORMAL | 150° | 210° |
| A | 140° | 215° |
| B | 132° | 248° |

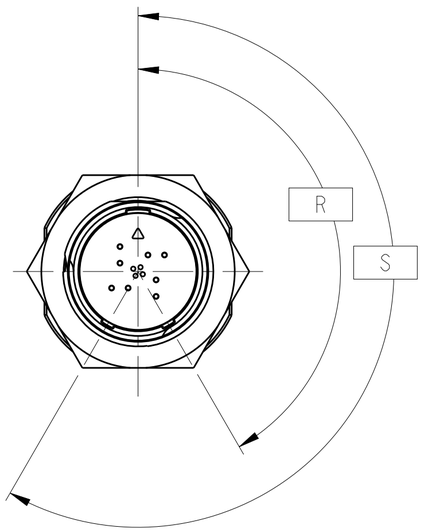


1. -1, -3 AND -5 ARE ELECTROLESS NICKEL PLATE PER MIL-C-26074.
2. -2, -4 AND -6 ARE BLACK ZINC NICKEL PER AMS-2417.
3. O-RING AND NUT ARE ASSEMBLED TO SHELL. CONTACTS SHALL BE PACKAGED SEPARATELY IN KIT.

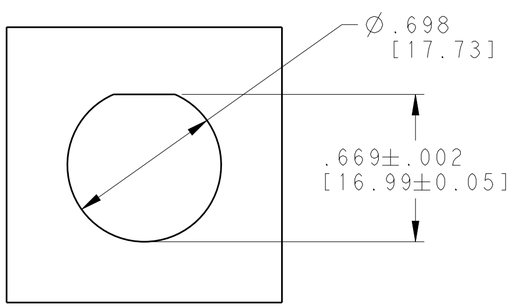


1/8" MAX PANEL THICKNESS

| JAM NUT BLACK ZINC NICKEL PLATE | JAM NUT NICKEL PLATE | O-RING FLUOROSILICONE | PIN CONTACT 50µ GOLD PLATE | KEYING OPTION | FINISH | PART NUMBER |
|---|---|---|---|---|---|---|
| 1 | - | 1 | 10 | B | BLACK ZINC NICKEL PLATE | 2102352-6 |
| - | 1 | 1 | 10 | B | NICKEL PLATE | 2102352-5 |
| 1 | - | 1 | 10 | A | BLACK ZINC NICKEL PLATE | 2102352-4 |
| - | 1 | 1 | 10 | A | NICKEL PLATE | 2102352-3 |
| 1 | - | 1 | 10 | NORMAL | BLACK ZINC NICKEL PLATE | 2102352-2 |
| - | 1 | 1 | 10 | NORMAL | NICKEL PLATE | 2102352-1 |

THIS DRAWING IS A CONTROLLED DOCUMENT.
DIMENSIONING AND TOLERANCING PER ASME Y14.5M (ISO STANDARDS)

DIMENSIONS: INCHES [mm]

TOLERANCES UNLESS OTHERWISE SPECIFIED:
0 PLC ±-
1 PLC ±-
2 PLC ±-
3 PLC ±.005 [0.13]
4 PLC ±-
ANGLES ±-

MATERIAL -
FINISH -

DWN MCKIBBEN, JOHN 09JUN2011
CHK DOWHOWER, KENNETH 09JUN2011
APVD DOWHOWER, KENNETH 09JUN2011
PRODUCT SPEC 108-2482
APPLICATION SPEC 114-32025
WEIGHT -

TE Connectivity

NAME RECEPTACLE ASSEMBLY KIT

| SIZE | CAGE CODE | DRAWING NO | RESTRICTED TO |
|---|---|---|---|
| A2 | 00779 | C-2102352 | - |

CUSTOMER DRAWING
SCALE 2:1 SHEET 1 OF 1 REV C

1471-9 (3/11)