20 CHARACTERS X 4 LINES
CHARACTER SIZE: 2.90W X 4.10H mm (5 X 7 DOTS)
2.90W X 4.70H mm (5 X 8 DOTS)

MDL(S)-20464

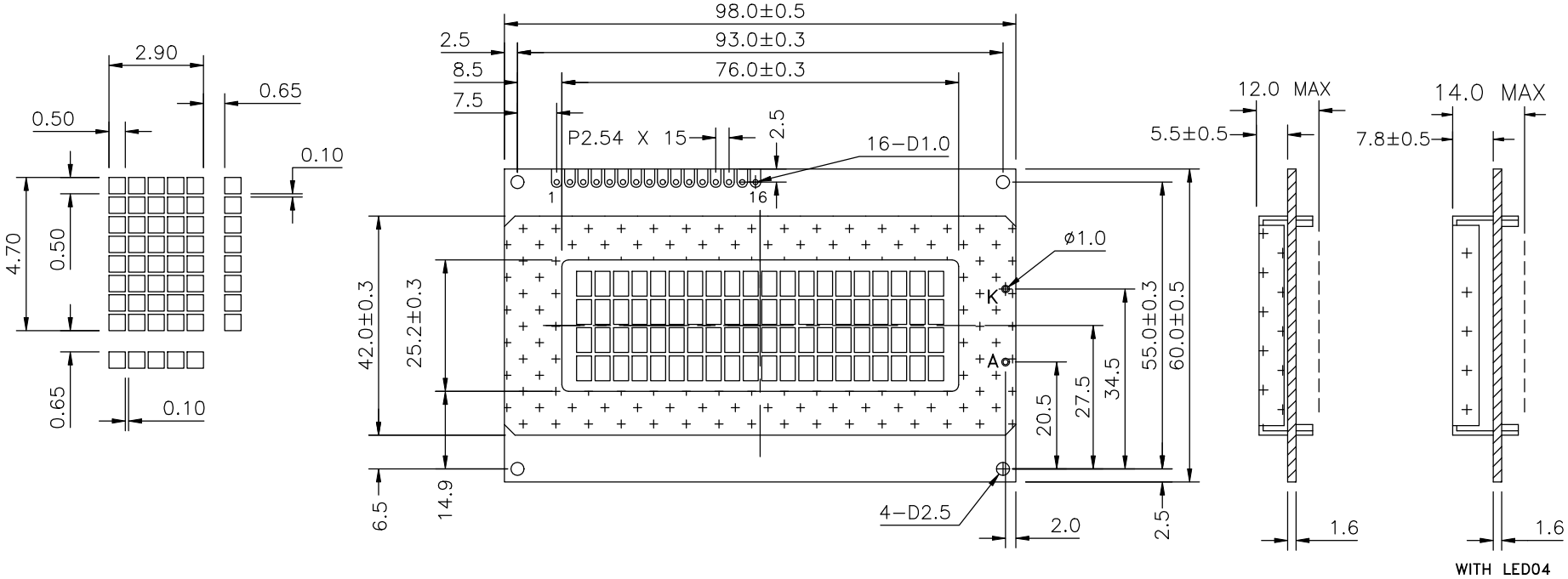

14 PIN CONNECTION	1	2	3	4	5	6	7	8	9	10	11	12	13	14	A	K
16 PIN CONNECTION	1	2	3	4	5	6	7	8	9	10	11	12	13	14	15	16
	VSS	VDD	V0	RS	R/W	E	DB0	DB1	DB2	DB3	DB4	DB5	DB6	DB7	LED(+)	LED(-)

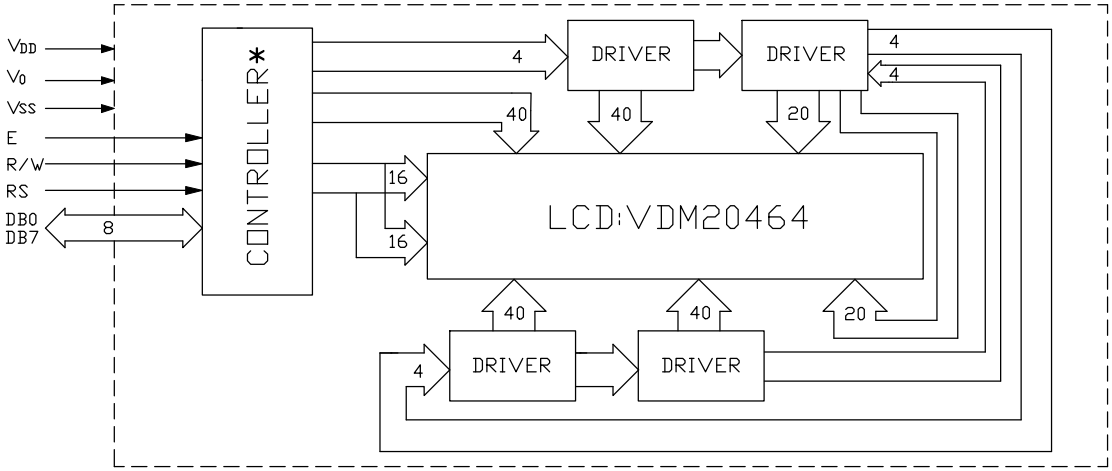

* HD44780 OR EQUIVALENT