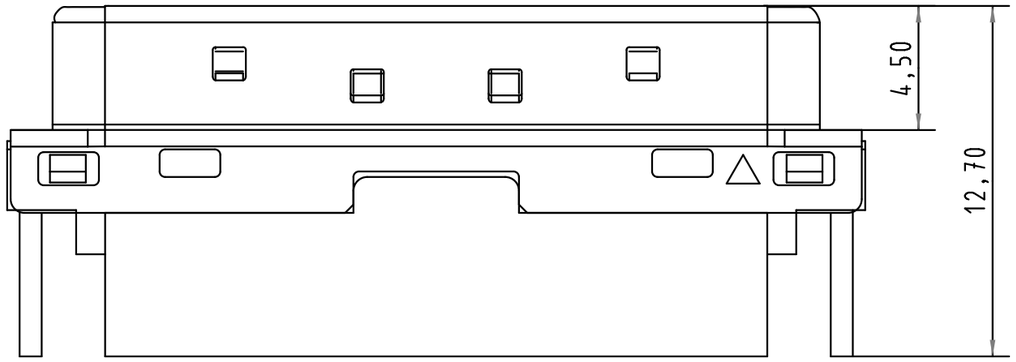


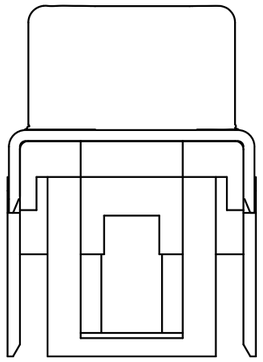

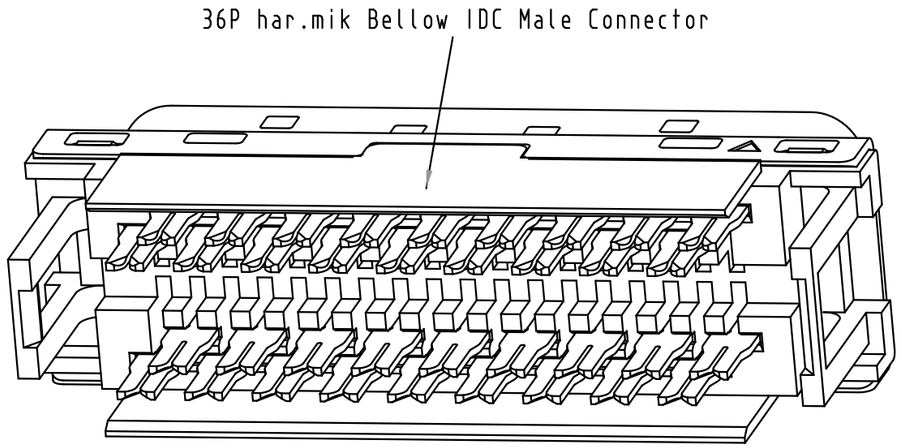


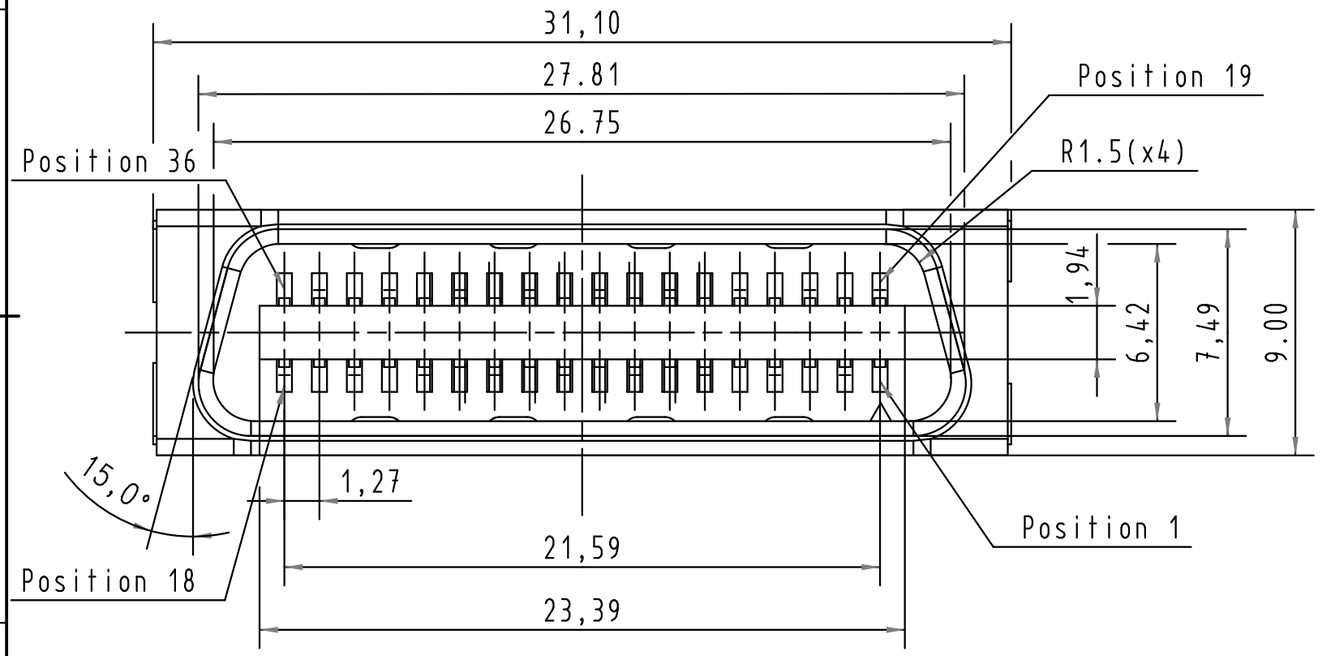


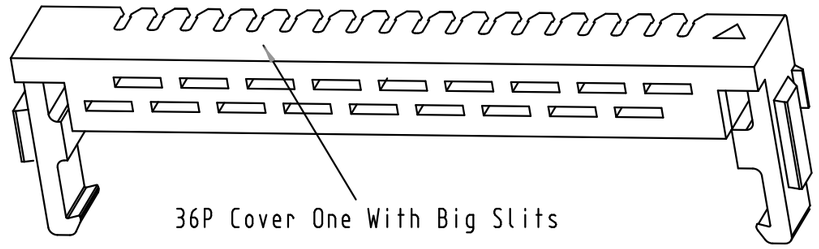


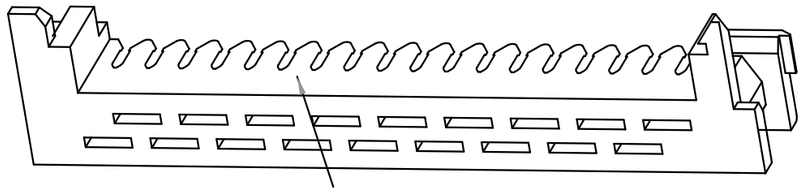


This connector is according to IEC 61076-3-100

| | | | | | | | |
|---|---|---|---|---|---|---|---|
| All Dimensions in mm Original Size DIN A 3 | | | Techn. Character. | | | | Free size tolerances |
| | | | | Dat. | Name | Scale | *har.mik®* I/O bellow |
| | | | Detail. | 06-MAR-08 | SW | 5 : 1 | 36 poles IDC male connector for wire insulator O.D from 0.75mm to 0.90mm |
| | | | Insp. | | | | |
| | | | Stand. | | | | |
| 31783 | 06-MAR-08 | SW | Zhuhai Harting Limited | | | | TB 60 13 036 5215 |
| Mod. | Dat. | Name | | | | | Sub. |

Page 1/1

All rights reserved