THIS DRAWING IS UNPUBLISHED. RELEASED FOR PUBLICATION -,- .
© COPYRIGHT - BY TYCO ELECTRONICS CORPORATION. ALL RIGHTS RESERVED.

LOC	DIST
DF	A0

REVISIONS

P	LTR	DESCRIPTION	DATE	DWN	APVD
	AB	REV PER ECO 08-021379	8-27-08	CT	KT

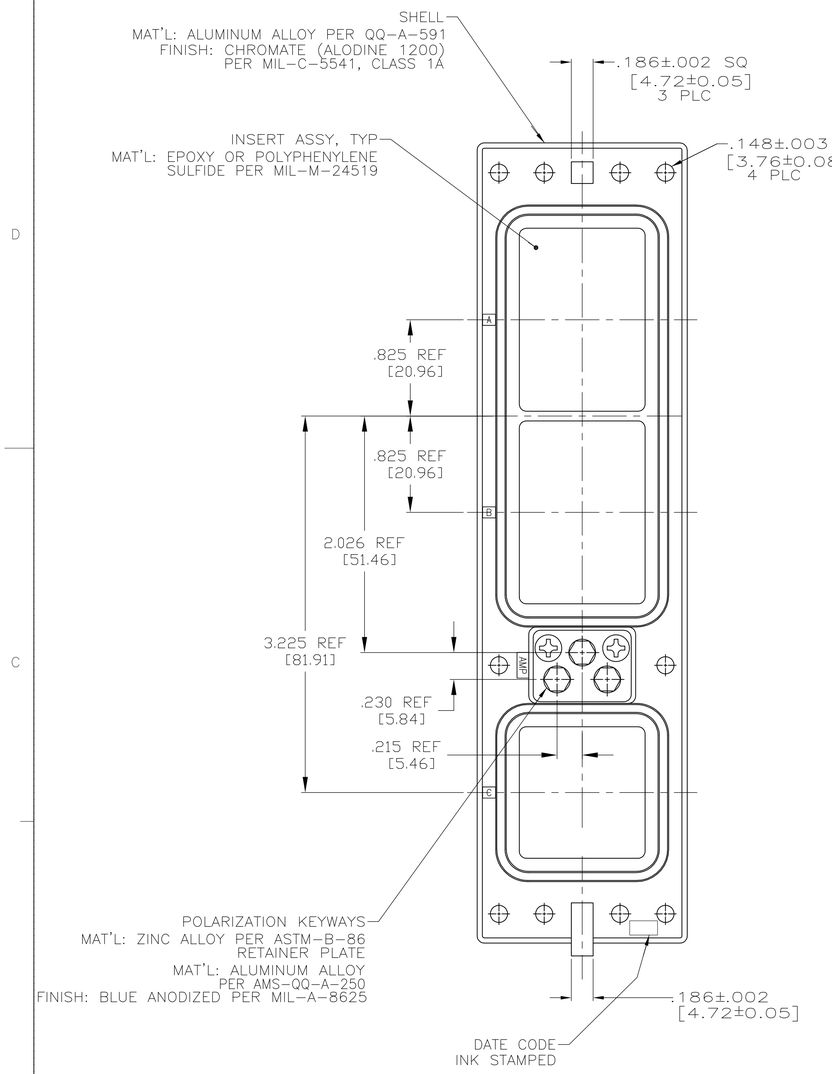

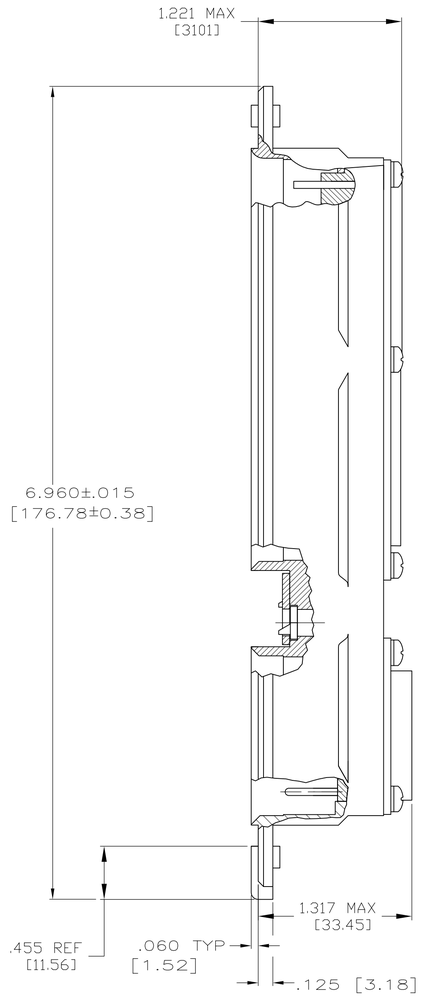

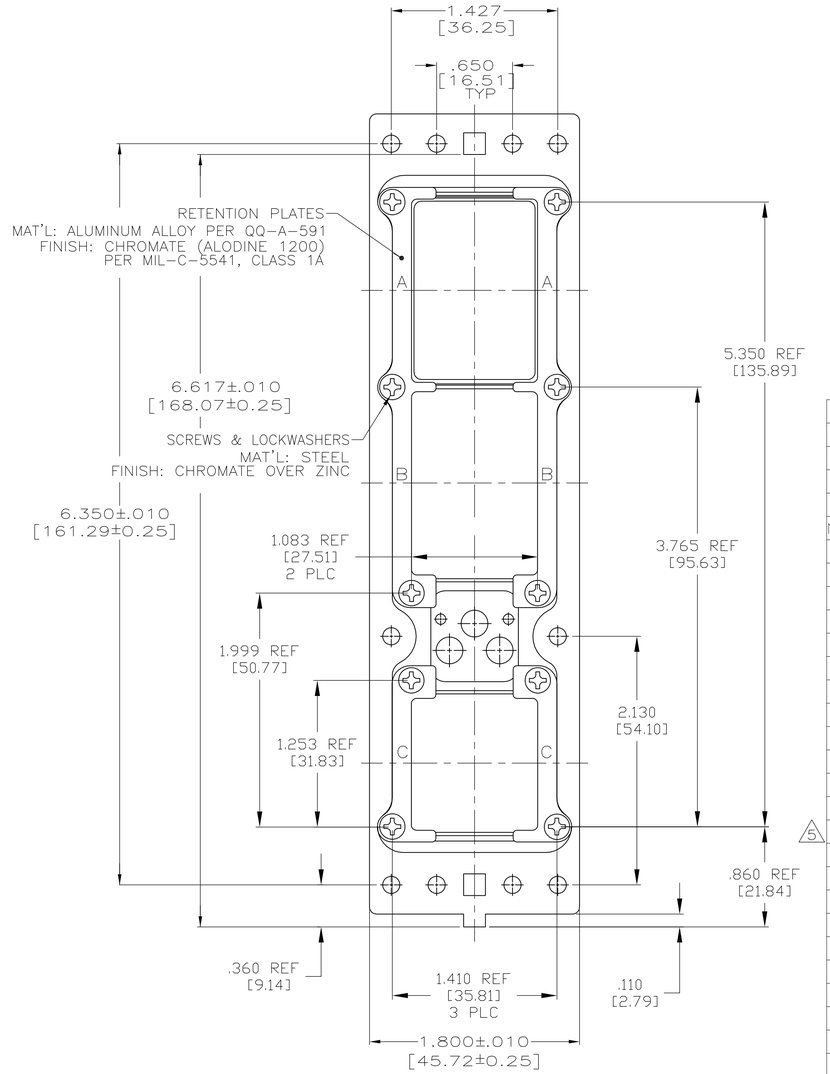

NIC66G23FA01FF0	4-211991-5
NIC66G21FA00GD0	4-211991-4
8 11	4-211991-3
8 10	4-211991-2
8 9	4-211991-1
NIC66G21FA01FK0 8	4-211991-0
7 6	3-211991-9
6 8	3-211991-8
NIC66G21FA07GD0	3-211991-7
NIC66G29FA02FA1	3-211991-6
NIC66G21FA01GJ0	3-211991-5
NIC66G20FA01FA1	3-211991-4
NIC66G20FA00FA1	3-211991-3
–	3-211991-2
–	3-211991-1
NIC66G21FA04FF0	3-211991-0
–	2-211991-9
–	2-211991-8
5 NIC66G21FA06GF0	2-211991-7
NIC66G21FA09GD0	2-211991-6
–	2-211991-5
NIC66G22FA00CC1	2-211991-4
NIC66G25FA00CC1	2-211991-3
NIC66G23FA00CC1	2-211991-2
NIC66G20FA08FB0	2-211991-1
NIC66G20FA03FB0	2-211991-0
–	1-211991-9
NIC66G29FA01FA1	1-211991-8
NIC66G23FA02FA1	1-211991-7
NIC66G21FA09GD0	1-211991-6
–	1-211991-5
NIC66G21FA02FF0	1-211991-4
–	1-211991-3
NIC66G26FA68GD0	1-211991-2
NIC66G21FA01FC0	1-211991-1
NIC66G21FA01CC1	1-211991-0
NIC66G21FA00CC1	211991-9
NIC66G26FA01FA1	211991-8
–	211991-7
NIC66G21FA01SB1	211991-6
NIC66G21FA01GD0	211991-5
NIC66G23FA91FA1	211991-4
NIC66G25FA01FA1	211991-3
NIC66G21FA FA1	211991-2
NIC66G23FA01FA1	211991-1
DESCRIPTIVE NUMBER	4 PART NUMBER

1. CONTACTS ARE SHOWN IN POSITION FOR ILLUSTRATION ONLY. FOR SHIPMENT CONTACTS ARE INCLUDED IN A CONTAINER WITHIN THE CONNECTOR PACKAGE, UNLESS OTHERWISE SPECIFIED. COAX CONTACTS ARE NOT SUPPLIED AND MUST BE ORDERED SEPARATELY.
2. ~~ALL CONTACTS CAVITIES IN MODULES A & B ARE LOCATED WITHIN .006 [0.15] DIA TRUE POSITION. ALL CONTACT CAVITIES IN MODULE C ARE LOCATED WITHIN .020 [0.51] DIA TRUE POSITION.~~
3. POLARIZING KEYS SHOWN IN POSITION 01 FOR ILLUSTRATION ONLY CONNECTORS SHIPPED WITH KEYING PER ORDERING INSTRUCTIONS. CONTACT INSERTS AS SHOWN FOR ILLUSTRATION ONLY. SEE TABLE FOR DISCRIPTIVE NUMBER.
4. ~~FRONT RELEASE FEATURE PERTAINS TO SIGNAL INSERTS ONLY.~~
5. ALL CONTACTS SUPPLIED ARE LOADED IN THE CONNECTOR.
6. SPECIAL WITH INSERTS 150/150/OPEN. STANDARD MOUNTING. SIZE 22 CONTACTS (211431-4) LOADED IN THE 150 POSN. INSERT. (2 PLC)
7. SPECIAL WITH INSERTS 150/OPEN/OPEN. STANDARD MOUNTING. SIZE 22 CONTACTS (211431-4) LOADED IN THE 150 POSN. INSERT.
8. PRELIMINARY PART NUMBER, NOT RELEASED FOR PRODUCTION.
9. SPECIAL WITH INSERTS FR 150/FR 71C1/RR 34. SIX #4-40 CLINCH NUTS. 220 SIZE 22 POSTED SOCKET CONTACTS (211431-2) LOADED IN THE 150 AND 71C1 INSERTS. ALL OTHER CONTACTS ORDERED SEPARATELY. KEYED IN POSITION "01".
10. SAME AS 3-211991-0 EXCEPT SIZE 22 CONTACTS ARE SOLDER DIPPED.
11. SPECIAL WITH INSERTS 150/121/100 ALL FRONT RELEASE AND LOADED WITH .250 [6.35] EXTENSION POSTED CONTACTS. SIX #6-32 CLINCH NUTS. KEYED IN POSITION "01".
12. ALL DIMENSIONS PER ARINC 600 SPECIFICATIONS.

.025 SQUARE FRONT RELEASE #22 CONTACTS	–	–	–	.025 ROUND FRONT RELEASE #22 CONTACTS	.500 [12.70]	211431-8
	3	.500 [12.70]	211245-6		.375 [9.53]	211431-6
	2	.375 [9.53]	211245-4		.250 [6.35]	211431-4
	1	.250 [6.35]	211245-2		.150 [3.81]	211431-2
	NUMBER OF WRAPS	MIN POST EXTENSION FROM REAR OF INSERT	AMP PART NUMBER		MIN EXTENSION FROM REAR OF INSERT	AMP PART NUMBER
CONTACTS						

THIS DRAWING IS A CONTROLLED DOCUMENT.

DIMENSIONS: INCHES

TOLERANCES UNLESS OTHERWISE SPECIFIED:
0 PLC ± –
1 PLC ± –
2 PLC ± –
3 PLC ± .005 [0.13]
4 PLC ± –
ANGLES ±0° 30'

MATERIAL: SEE CALLOUTS
FINISH: SEE CALLOUTS

DWN C.C.THOMAS 11-27-95
CHK R.GROSS 4-11-96
APVD R.GROSS 4-11-96
PRODUCT SPEC —
APPLICATION SPEC —
WEIGHT —

Tyco Electronics
Tyco Electronics Corporation
Harrisburg, PA 17105-3608

NAME: CONNECTOR ASSY,SIZE 2 CLASS A, RCPT,ARINC-600 FRONT RELEASE

SIZE	CAGE CODE	DRAWING NO	RESTRICTED TO
A1	00779	C-211991	—

CUSTOMER DRAWING
SCALE 1.5:1 SHEET 1 OF 1 REV AB

AMP 4805 REV 31MAR2000