/home/us016926/DMTECmod

DRAWING MADE IN THIRD ANGLE PROJECTION

PART NUMBER	REV	FIRST USED
1385049-1	E	122500-1
1385049-2	E	565435-5
1385049-3	E	354500-1
7-1385049-7	D	-

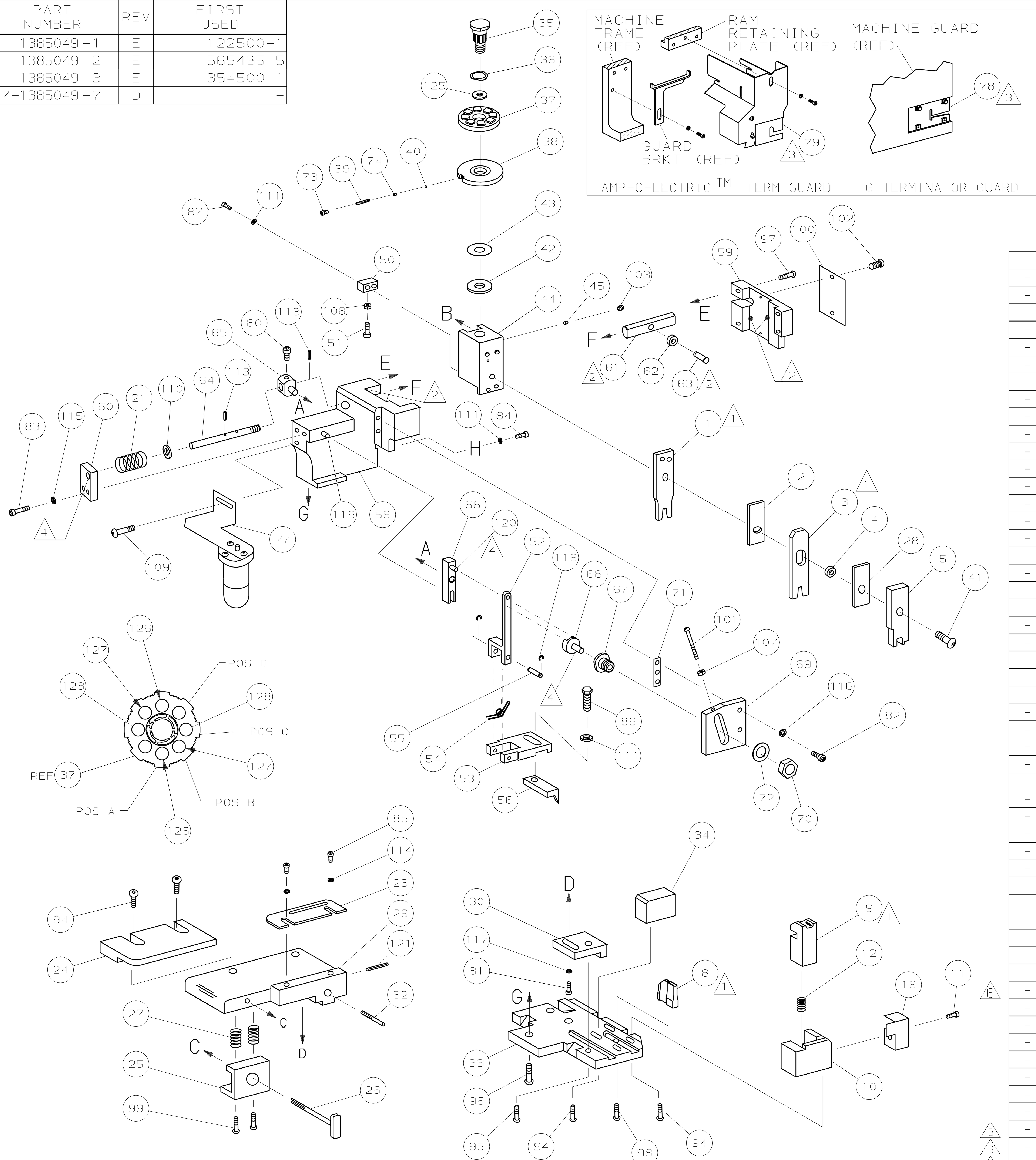

TERMINAL NAME: 150.2 PULL-TO-SEAT FEMALE TERMINAL

AMP		MFR
286865-1		12124075
286865-2		12161184

CRIMP DATA (NON-AMP TERMINAL-AMP SPEC)

PAD LTR	CRIMP HEIGHT	WIRE SIZE
A	.060 ±.002 [1.52 ±0.05mm]	16
B	.052 ±.002 [1.32 ±0.05mm]	18
C	.046 ±.002 [1.17 ±0.05mm]	20
D	NOT	USED

CRIMP	SIZE	TYPE	RANGE
WIRE	.070 [1.78mm]	F	18
INSUL	.104 [2.64mm]	F	.080 MAX

WIRE STRIP LENGTH	TERM APPL SPEC	FEED	APPL INSTRUCTION	SET UP GAGE	LAYOUT
.169-.200	NONE	.390	408-8040	458637-1	L2375

-1	LEADMAKER	MECH POST FEED
-2	BENCH MODEL K	MECH PRE FEED
-3	BENCH MODEL G	MECH PRE FEED

-77	-	SPARE PARTS KIT

PARTS LIST

NOTE	-77	-3	-2	-1	U/M	DWG SIZE	PART NO	DESCRIPTION	ITEM NO
									129
	-	2	2	2	-	C	3-354779-0	PIN, WIRE DISC (.3140)C	128
	-	2	2	2	-	C	1-354779-8	PIN, WIRE DISC (.3080)B	127
	-	2	2	2	-	C	354779-2	PIN, WIRE DISC (.3000)A	126
	-	1	1	1	-	A	986950-1	WASHER, FLAT PRECISION	125
	-	1	1	1	-	A	217238-1	GENERAL INSTRUCTION PACKAGE	124
	-	1	1	1	-	-	4088040	SF APPL INST 408-8040	123
									122
	-	1	1	1	-	A	4-21028-0	PIN,SLT SPR(ø.093x.75)ST GDE PL	121
	-	REF	REF	REF	-	A	1-21030-1	PIN,DOWEL(ø.187x.50)LEVER	120
	-	REF	REF	REF	-	A	1-21030-6	PIN,DOWEL(ø.187x1.25)HOUSING	119
	-	REF	REF	REF	-	A	21045-3	RING,RET "C"(ø.187)FD FING PIN	118
	-	1	1	1	-	A	21024-5	WASHER, LOCK(#10)ADJ BLOCK	117
	-	REF	REF	REF	-	A	21024-5	WASHER,LOCK(#10)ADJ PLATE	116
	-	REF	REF	REF	-	A	21024-5	WASHER,LOCK(#10)FEED GDE ROD	115
	-	2	2	2	-	A	21024-2	WASHER,LOCK(#4)FRONT STP GUIDE	114
	-	REF	REF	REF	-	A	5-21028-1	PIN,SLT SPR(ø.125x.50)ADJ ROD	113
									112
	-	4	4	4	-	A	21024-4	WASHER,LOCK(#8)STRIPPER	111
	-	REF	REF	REF	-	A	21899-4	WASHER,FLAT(ø5/16)SCREW ADJ	110
	-	-	1	-	-	A	2-21002-6	SCR,BHC(10-32x.38)LUBE ASSY	109
	-	1	1	1	-	A	21018-5	NUT,HEX(NO.6)HOLDDOWN	108
	-	REF	REF	REF	-	A	21068-5	NUT,HEX(6-32)FEED ADJ	107
									106
									105
									104
	-	1	1	1	-	A	21009-2	SCR,SKT SET(1/4-20x.25 LW)RAM	103
	-	2	2	2	-	A	21017-2	SCR,DRIVE(#2x.19)ID PLATE	102
	-	REF	REF	REF	-	A	6-23715-5	SCR,PAN HD(6-32x1.50)FEED ADJ	101
	-	1	1	1	-	B	461264-1	PLATE, IDENTIFICATION	100
	-	2	2	2	-	A	3-21002-0	SCR,BHC(10-32x.88)DRAG	99
	-	1	1	1	-	A	22733-8	SCR,BHC(8-32x.38 LW)ANVIL	98
	-	REF	REF	REF	-	A	2-21002-9	SCR,BHC(10-32x.75)CAP	97
	-	REF	REF	REF	-	A	2-22733-8	SCR,BHC(1/4-20x.62)HOUSING	96
	-	REF	REF	REF	-	A	2-21002-7	SCR,BHC(10-32x.50)SG ADJ BLOCK	95
	-	6	6	6	-	A	2-21002-2	SCR,BHC(8-32x.50)TERM H DWN	94
									93
									92
	-	1	1	1	-	A	1-21002-7	SCR,BHC(6-32x.38)CAM	91
									90
									89
									88
	-	2	2	2	-	A	2-21000-7	SCR,SHC(8-32x.48)DEP-HOLD	87
	-	1	1	1	-	A	2-22603-0	SCR,HEX HD(8-32x.31)FEED FINGER	86
	-	2	2	2	-	A	1-21000-3	SCR,SHC(4-40x.25)F ST GUIDE	85
	-	1	1	1	-	A	2-21000-7	SCR,SHC(8-32x.50)STRIPPER	84
	-	REF	REF	REF	-	A	3-21000-7	SCR,SHC(10-32x.75)FEED ROD GD	83
	-	REF	REF	REF	-	A	3-21000-6	SCR,SHC(10-32x.62)FD ADJ BLK	82
	-	1	1	1	-	A	3-21000-4	SCR,SHC(10-32x.38)SG ADJ BL	81
	-	REF	REF	REF	-	A	3-21000-4	SCR,SHC(10-32x.38)PIVOT BLK	80
3	-	-	REF	-	-	B	455749-1	GUARD, WINDOW	79
3	-	REF	-	-	-	B	679532-1	INSERT, GUARD	78
7	-	-	1	-	-	C	1-465184-0	LUBRICATOR ASSY	77
									76
									75
	-	1	1	1	-	A	690603-1	SPRING, ASSIST	74
	-	1	1	1	-	A	23030-1	SCR,SHC(6-32x.25 SL)INS DISC	73
	-	REF	REF	REF	-	A	458109-1	WASHER, SPECIAL	72
	-	REF	REF	REF	-	A	690517-1	SPACER	71

QTY REQD PER ASSY — PARTS LIST

NOTE	-77	-3	-2	-1	U/M	DWG SIZE	PART NO	DESCRIPTION	ITEM NO
	-	REF	REF	REF	-	B	22594-8	NUT,HEX(1/2-20)	70
	-	REF	REF	REF	-	B	240628-1	PLATE, ADJUSTMENT	69
	-	REF	REF	REF	-	B	240626-1	SHAFT, PIVOT	68
	-	REF	REF	REF	-	B	240633-1	BUSHING	67
	-	REF	REF	REF	-	A	455680-1	LEVER, INTERMEDIATE	66
	-	REF	REF	REF	-	B	240629-1	BLOCK, PIVOT	65
	-	REF	REF	REF	-	A	240632-2	SCREW, ADJ FEED ROD	64
	-	REF	REF	REF	-	B	240659-3	PIN, CAM ROLLER	63
	-	REF	REF	REF	-	B	240658-1	ROLLER, CAM	62
	-	REF	REF	REF	-	B	454398-2	ROD, FEED	61
	-	REF	REF	REF	-	A	454178-1	GUIDE, FEED ROD	60
	-	REF	REF	REF	-	C	454220-1	CAP, RAM	59
	-	REF	REF	REF	-	D	454485-1	HOUSING	58
									57
	-	1	1	1	-	B	458537-2	PAWL, FEED	56
	-	REF	REF	REF	-	B	240624-1	PIN, FEED FINGER	55
	-	REF	REF	REF	-	B	691499-1	SPRING, FEED FINGER	54
	-	REF	REF	REF	-	B	690541-1	HOLDER, FEED FINGER	53
	-	REF	REF	REF	-	A	455679-2	LEVER, TERMINAL FEED ARM	52
	-	1	1	1	-	A	811242-2	BUMPER, HOLDDOWN	51
	-	1	1	1	-	A	690753-1	SPACER, TONKER	50
	-	1	-	-	-	B	690602-6	CAM, PRE-FEED 1 5/8 ST	49
	-	-	1	-	-	B	690602-5	CAM, PRE-FEED 1 1/8 ST	48
	-	-	-	1	-	B	690501-4	CAM, POST-FEED 1 5/8 ST	47
	-	1	1	1	-	B	459456-2	APPLICATOR, BASIC (SUBASSY)	46
	-	1	1	1	-	A	690191-1	PLUG, NYLON	45
	-	1	1	1	-	C	455673-1	RAM	44
	-	1	1	1	-	A	690125-1	WASHER, LAMINATED	43
	-	1	1	1	-	A	690124-1	WASHER, RAM	42
	-	1	1	1	-	A	7-21002-9	BOLT, CRIMPER(5/16x1.00)	41
	-	1	1	1	-	A	23241-6	BALL, STEEL	40
	-	1	1	1	-	A	690170-1	SPRING, COMPRESSION	39
	-	1	1	1	-	C	690142-1	DISC, INSULATION	38
	-	1	1	1	-	D	354777-1	WIRE DISC, PLASTIC	37
	-	1	1	1	-	A	22480-5	WASHER, SPRING	36
	-	1	1	1	-	B	690212-1	POST, RAM	35
	-	1	1	1	-	B	690786-1	SUPPORT, TERMINAL	34
	-	REF	REF	REF	-	D	455675-1	PLATE, BASE	33
	-	1	1	1	-	A	690432-3	SCREW, ADJUSTMENT	32
									31
	-	REF	REF	REF	-	B	455689-1	BLOCK, STRIP GUIDE ADJ	30
	-	1	1	1	-	C	455671-9	PLATE, STRIP GUIDE	29
	-	1	1	1	-	C	1-455888-5	SPACER, FRONT SHEAR DEP	28
	-	2	2	2	-	A	1-22284-0	SPRING, DRAG	27
	-	1	1	1	-	B	690546-1	LEVER, DRAG RELEASE	26
	-	1	1	1	-	B	240792-1	DRAG, TERMINAL	25
	-	1	1	1	-	D	7-690504-9	GUIDE, STRIP (REAR)	24
	-	1	1	1	-	A	690438-1	GUIDE, STRIP (FRONT)	23
	-	-	-	1	-	B	690472-2	STRIPPER	22
	-	REF	REF	REF	-	A	4-22284-9	SPRING, FEED RETURN	21
									20
	-	1	1	-	-	B	691353-1	STRIPPER	19
									18
									17
	-	1	1	1	-	B	318563-1	GUARD, CHIP, FRONT	16
									15
									14
									13
	-	1	1	1	-	A	3-22280-3	SPRING, SHEAR	12
	-	1	1	1	-	B	690461-1	STOP, SHEAR	11
	-	1	1	1	-	C	690459-1	HOLDER, SHEAR (FRONT)	10
1	-	1	1	1	-	C	454276-1	SHEAR, FLOAT (FRONT)	9
1	1	1	1	1	-	C	2-805887-6	ANVIL	8
									7
									6
	-	1	1	1	-	C	1-455889-4	DEPRESSOR, SHEAR (FRONT)	5
	-	1	1	1	-	B	1-238011-0	SPACER, BLOCK CRIMPER	4
1	1	1	1	1	-	C	8-683453-7	CRIMPER, INSULATION	3
	-	1	1	1	-	C	455888-2	SPACER, CRIMPER	2
1	1	1	1	1	-	C	3-456404-1	CRIMPER, WIRE	1

← REVISION OF EACH ASSY NO (WHEN BLANK, USE DWG REVISION)

QTY REQD PER ASSY — PARTS LIST

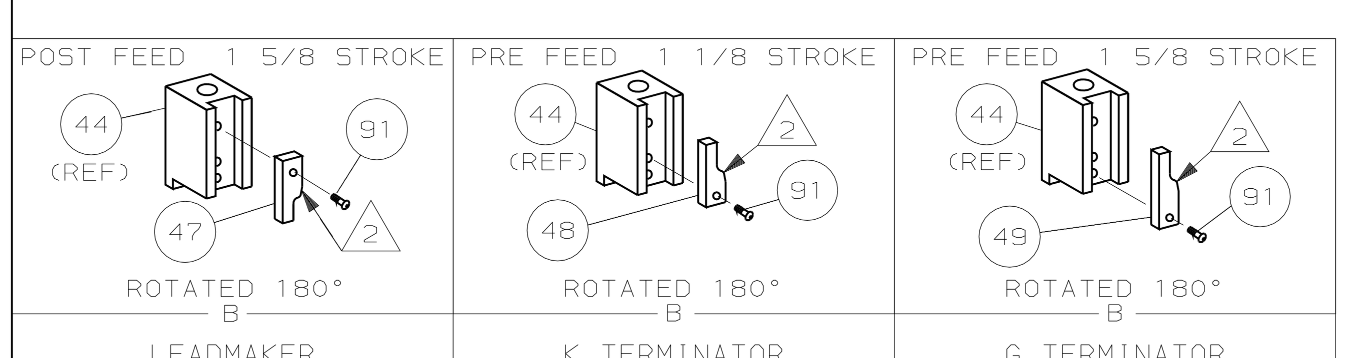

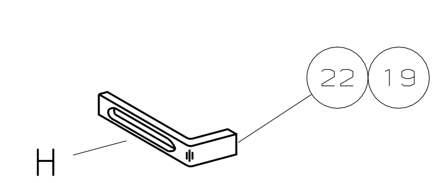

LEADMAKER & BENCH MACHINE

1. RECOMMENDED SPARE PARTS.
2. GREASE LIGHTLY.
3. GUARD MUST BE IN PLACE WHEN OPERATING APPLICATOR IN A BENCH MACHINE.
4. LUBRICATE DAILY USING NO. 20 MACHINE OIL.
5. ITEMS WITH QTY OF REF SPECIFIED (EXCEPT ITEMS 78 AND 79) ARE USED ON ITEM 46.
6. CUT TO LENGTH AT ASSY
7. TERMINALS WITH GOLD, SILVER OR NICKEL PLATING REQUIRE LUBRICATION.

P	F	LTR	REVISION RECORD	APP	DATE
		E	ECR-06-002153	GB	1-06
		D2	ADD -77	RK	JUL05
		D1	ECN 0150-0119-04	TE	2-04
		D	ECN 0150-0769-03	TE	7-03
		C	ECN 0150-0424-03	TE	4-03
		B	0150-0251-02	CE	FEB02
		A	REVISED	BH	5/00

DIMENSIONS IN INCHES.
DO NOT SCALE PRINT.
TOLERANCES UNLESS OTHERWISE SPECIFIED:
2 PLC DEC ±-
3 PLC DEC ±-
4 PLC DEC ±-
ANGLES ± -
SURF TEXTURE: √
REMOVE BURRS, BREAK SHARP EDGES R.015 MAX

MATL - - | HT TR - | FIN -

DR B.HIGMAN 02MAY00 | APP 02MAY00 T.ELBIN
CHK 02MAY00 B.HIGMAN | REL -

AMP Incorporated Harrisburg, PA 17105-3608

NAME SIDE FEED HDM APPLICATOR | MACHINE REF MINI APPL

SCALE - | D | DWG NO 1385049 | SHEET 1 OF 1 | REV E

CAGE CODE 00779 | CUSTOMER AND ASSEMBLY DRAWING | RESTRICTED TO —

OBSOLETE
NOT the LATEST
REVISION

LOC A
DIST 66

THIS DRAWING IS A CONTROLLED DOCUMENT.
THIS DRAWING IS UNPUBLISHED. © COPYRIGHT 2000 BY AMP INCORPORATED. ALL RIGHTS RESERVED. RELEASED FOR PUBLICATION ,2000 .