20 CHARACTERS X 2 LINES
CHARACTER SIZE: 3.20W X 4.85H mm (5 X 7 DOTS)
3.20W X 5.55H mm (5 X 8 DOTS)

MDL(S)-20265

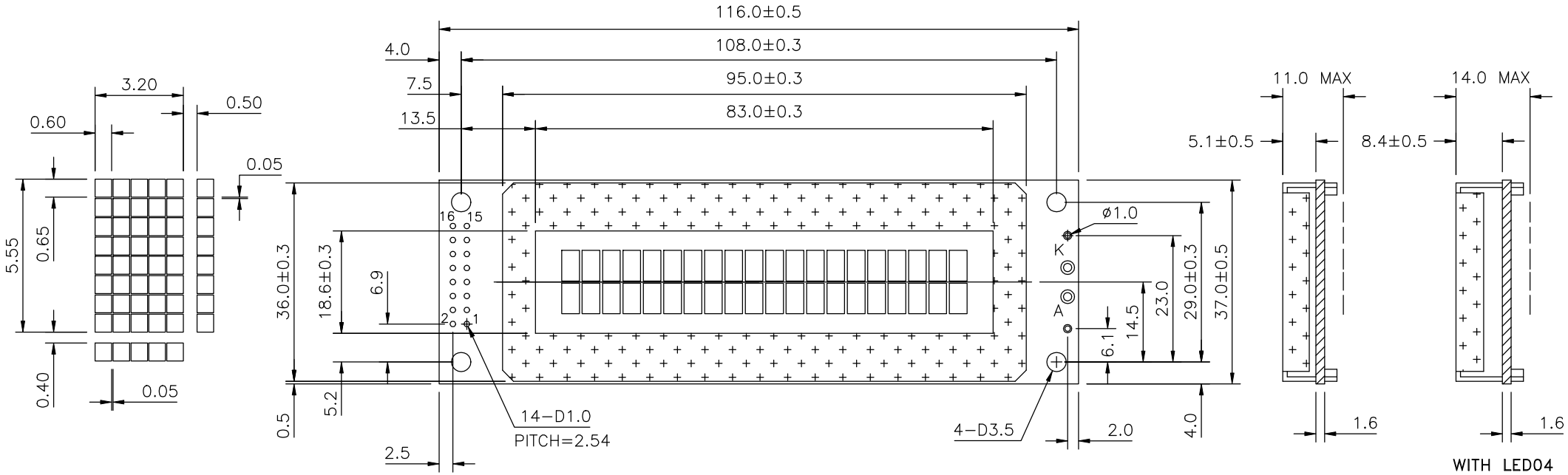
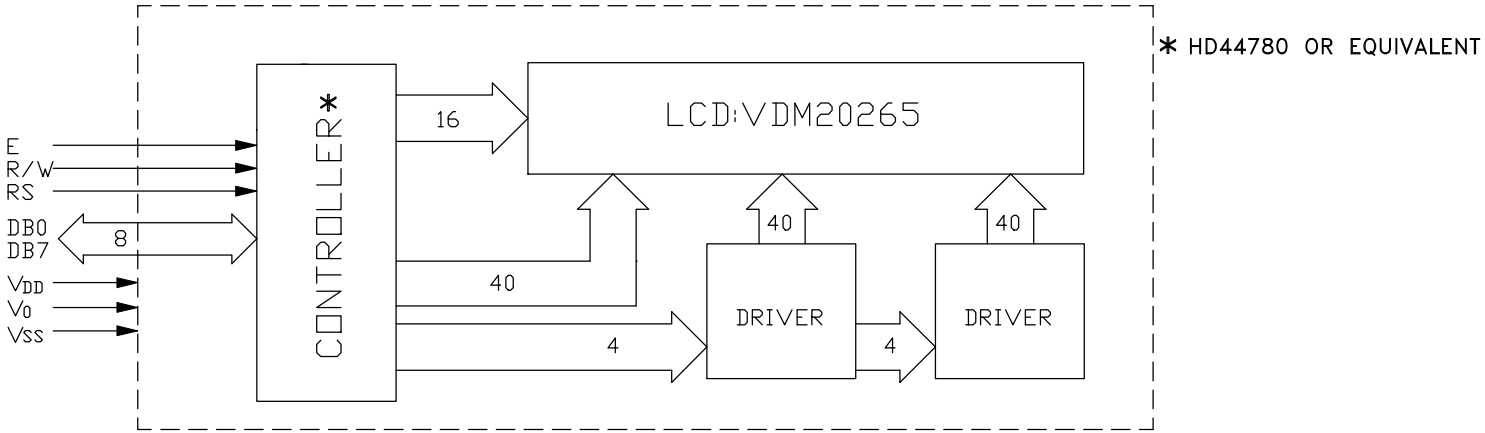
14 PIN CONNECTION	1	2	3	4	5	6	7	8	9	10	11	12	13	14	15(A)	16(K)
	VSS	VDD	V0	RS	R/W	E	DB0	DB1	DB2	DB3	DB4	DB5	DB6	DB7	LED(+)	LED(−)