MC75i TC63i TC65i Migration Adaptor

Upgrade Illustration

Illustration of MC75 + MC75 PCB Application.

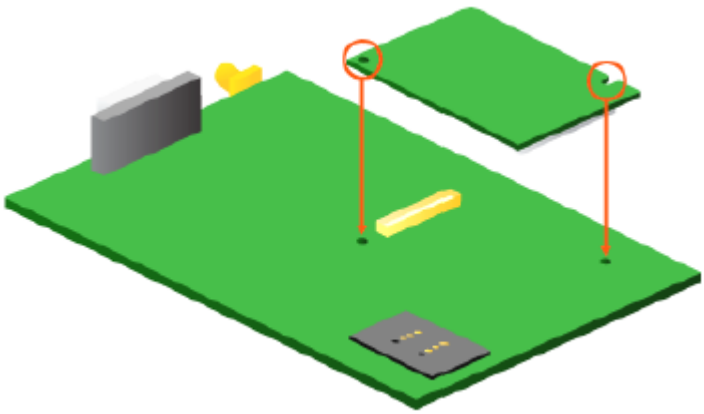

Upgrading to MC75i/TC63i/TC65i Platform with No PCB Design Change

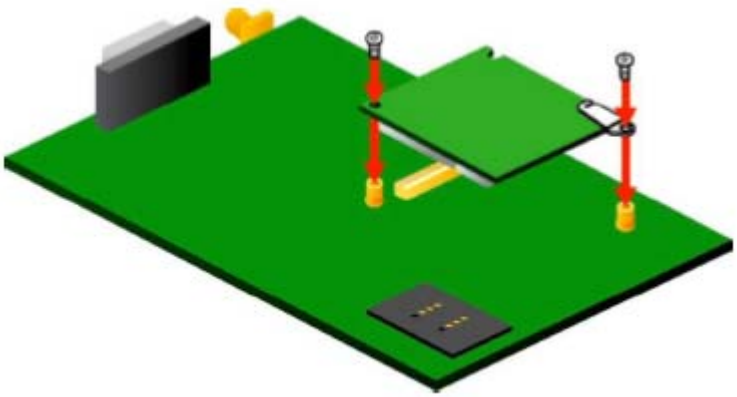

Illustration of MC75i + MC75 PCB (from above)

1) Migration Adaptor Extends the mounting position on the MC75i/TC63i/TC65i module.
2) MC75i/TC63i/TC65i mounting holes now align with the original MC75 PCB mounting footprint.
3) Secure the module to the PCB

Note: If using recommended GTT mounting pillars then solder the pillars through two 2.9mm plated holes in the PCB:

Mounting Pillar Option 1 : GTT P/N: R-14-0076 (3mm).
Mounting Pillar Option 2 : GTT P/N: R-14-0075 (4mm).

Secure the module onto the mounting pillars with self-locking screws.

Self-locking Screw : GTT P/N: R-14-0067.

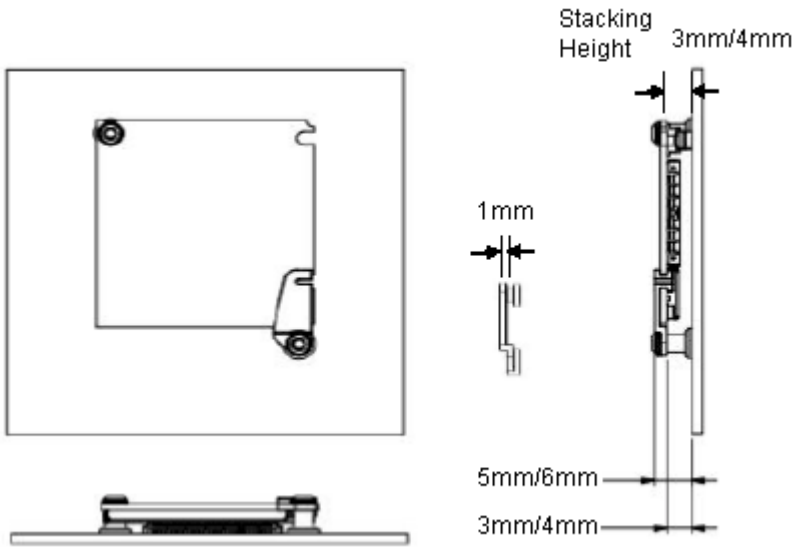

Adaptor Specifications

Physical
Clip material:
- PC-940A (flame retardant PC ,UL 94V-0).
- Colour : Black.
- RoHS compliant.

Operating temperature : -40°C to +100°C.
Weight : 2g.

Module PCB Footprint and Connector Receptacle Dimensions

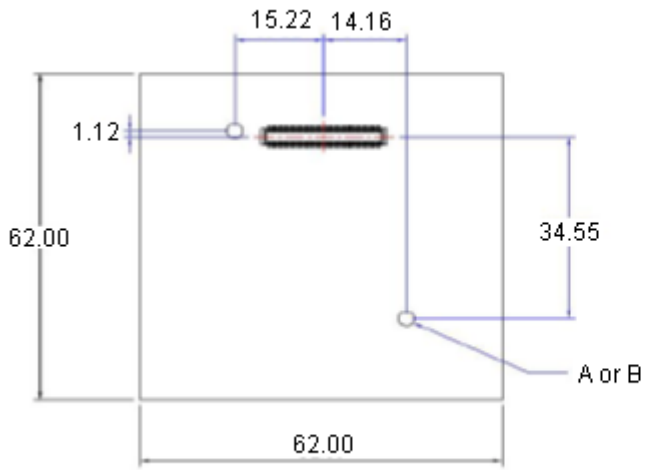

Module PCB Footprint (MC75)

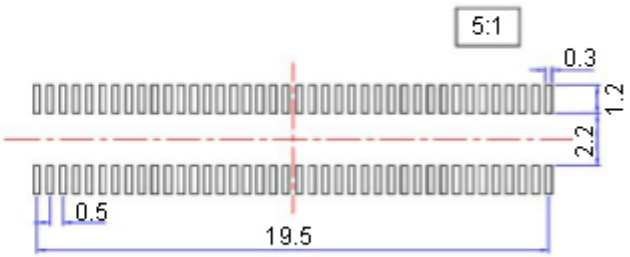

PCB Connector Receptable Dimensions

Dimensions: Millimetres

A: Typically ϕ2.2mm.
B: ϕ2.9mm supports GTT's recommended mounting pillars.

Mounting Instructions (Adaptor into Module)

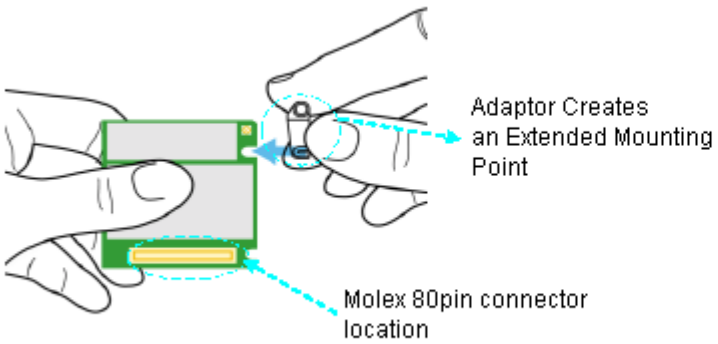

1st Step: Find the correct orientation

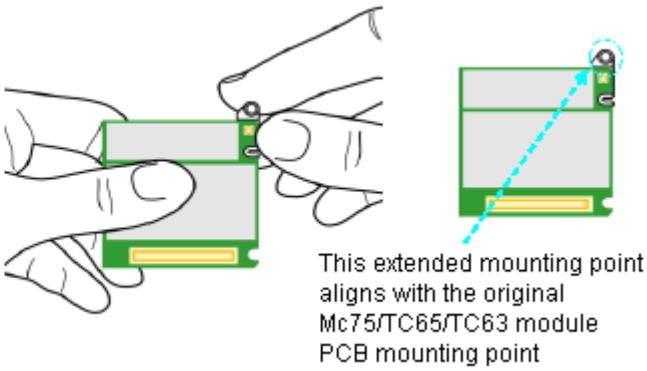

2nd Step: Slot the adaptor into the slit on the module

Mounting Instructions (Module + Adaptor into Circuit Board)

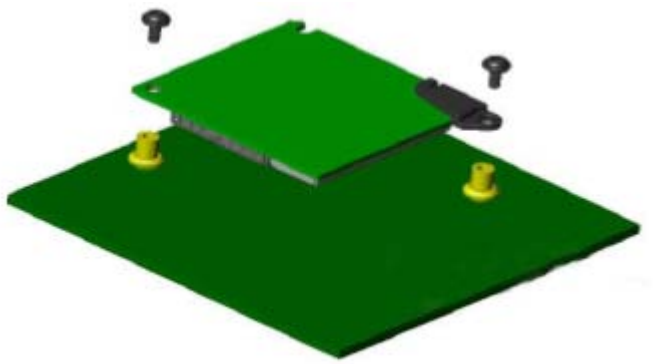

Step 1: Correctly align the module with the PCB mounting points by aligning the molex I/O connector and two mounting positions shown.
Step 2: Use GTT's recommended mounting pillars (see note below) or current mounting solution for the MC75/TC63/TC65 modules.

Note: To accomodate the GTT recommended mounting pillars you will need two 2.9mm plated holes on the PCB (please refer to the GTT 'PCB mounting pillars' datasheet).

Part Number Table

Description	Part Number
Adaptor, MC75i/TC63i/TC65i Migration	GT-MC75-MC75i-ADT

Disclaimer This data sheet and its contents (the "Information") belong to the Premier Farnell Group (the "Group") or are licensed to it. No licence is granted for the use of it other than for information purposes in connection with the products to which it relates. No licence of any intellectual property rights is granted. The Information is subject to change without notice and replaces all data sheets previously supplied. The Information supplied is believed to be accurate but the Group assumes no responsibility for its accuracy or completeness, any error in or omission from it or for any use made of it. Users of this data sheet should check for themselves the Information and the suitability of the products for their purpose and not make any assumptions based on information included or omitted. Liability for loss or damage resulting from any reliance on the Information or use of it (including liability resulting from negligence or where the Group was aware of the possibility of such loss or damage arising) is excluded. This will not operate to limit or restrict the Group's liability for death or personal injury resulting from its negligence. SPC Multicomp is the registered trademark of the Group. © Premier Farnell plc 2009.