1/2 COUPE AA

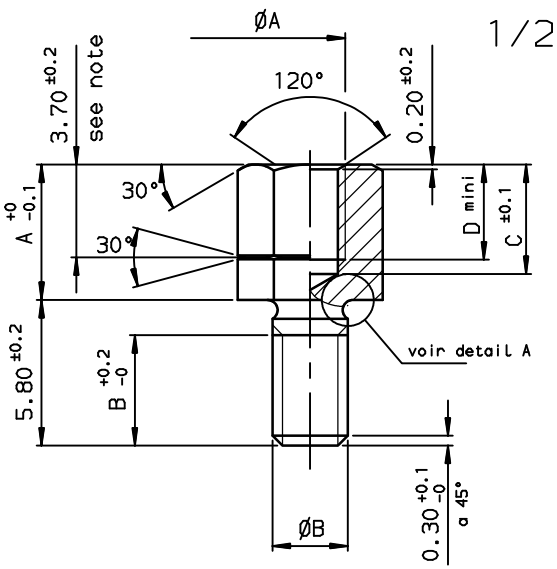

Detail A (ech:30)

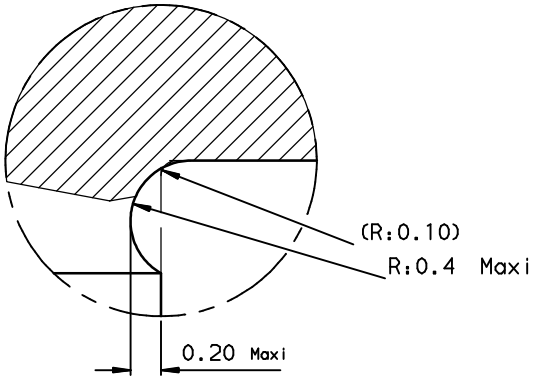

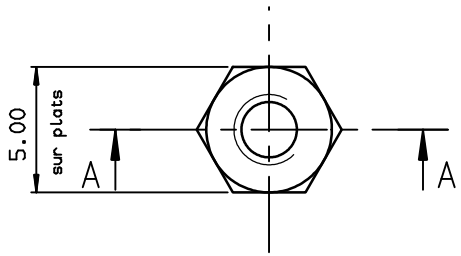

NOTES:

- Depth groove: 0.3mm use with 8655-1321 only which defined M3 thread inner.
- Packaging: per 1000
- Material: stainless steel

1 :Dimension controle with screw
2 :Dimension controle with caliber

Part number	Designations	A	B	C	D	ØA	ØB
86551321	Female screw locks	5.4	4.2	5.0	3.9 Note 2	4.2 Note 1	M3	M3
86551315	Female screw locks	5.4	4.2	5.0	3.7 Note 2	4.1 Note 1	4.40UNC-2B	M3
86551316	Female screw locks	6.4	4.8	5.8	4.3		4.40UNC-2B	M3

NOTE:RoHS INFORMATIONS

- These products meet European union Directives and other country regulations as described in GS-22-008.(RoHS Compliant products)
- Packaging spec: see GS-14-920

rev	ecn no	dr	date
B	-	JOU	1994/11/24
C	LS05-0026	MPE	2005/07/08
D	LS06-0095	LGO	2006/07/24
-	-	-	-
-	-	-	-
-	-	-	-
-	-	-	-

European Views

www.fciconnect.com

surface ISO 1302 | tolerance std ISO 406 ISO 1101 | TOLERANCES UNLESS OTHERWISE SPECIFIED | projection | mm

Dr	JOUBERT	1994/10/13	ANGULAR	LINEAR	0.X	±0.1
Eng	PESSON	1994/10/13			0.XX	±0.1
Chr	LEGARE	1994/10/13	0.XX° ±2°		0.XXX	±0.1
Appr	LEGARE	1994/10/13	Product family		D-SUB	

size A3 | Scale 5 | ECN LS06-0095 | Spec ref -

title FEMALE SCREW LOCKS

dwg no C01-8655-0655 | Rev. D

catalog no - | CUSTOMER | sheet 1 of 1

Copyright FCI.

REV F - 2006-04-17