THIS DRAWING IS UNPUBLISHED. RELEASED FOR PUBLICATION -,- .
© COPYRIGHT - By - ALL RIGHTS RESERVED.

LOC	DIST
AF	50

REVISIONS

P	LTR	DESCRIPTION	DATE	DWN	APVD
	C	REVISED PER ECR-12-013518	10DEC12	KH	PD

1 CONTINUOUS STRIP ON REELS

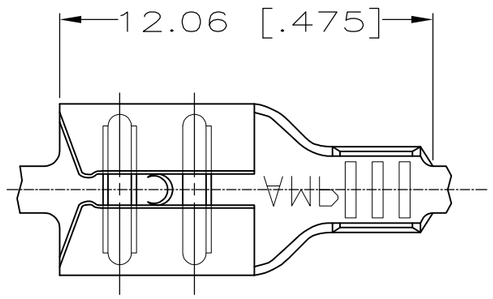

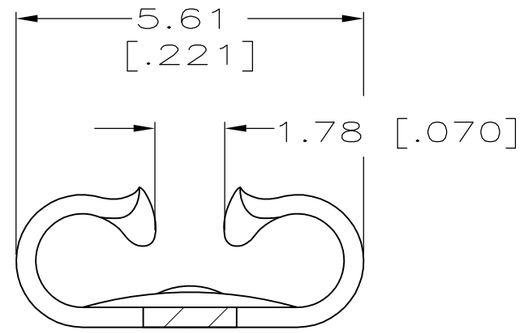

VIEW A–A
SCALE 10:1

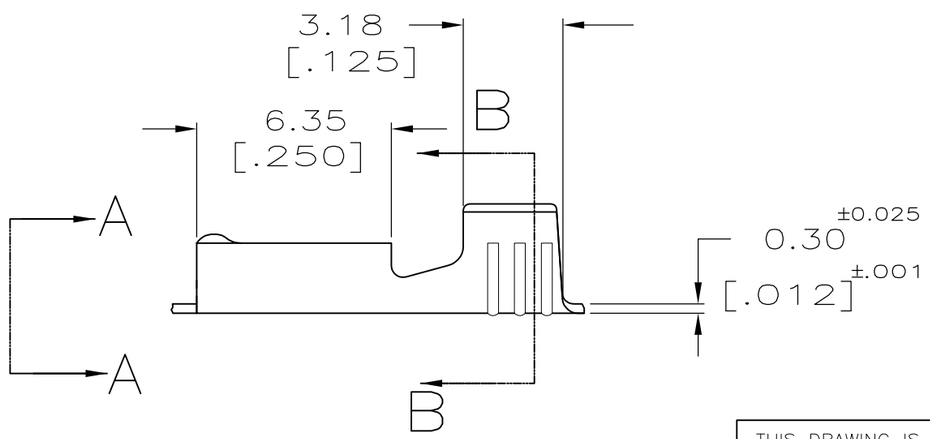

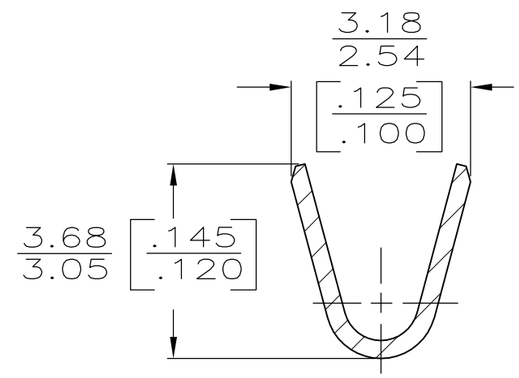

SECTION B–B
SCALE 10:1

FINISH	WIRE SIZE	MATING TAB THK ±0.025 [.001]	PART NO
–	0.5–1.3mm² [20–16] AWG	0.81 [.032]	63785–1

THIS DRAWING IS A CONTROLLED DOCUMENT.

DIMENSIONS: mm [INCHES]

TOLERANCES UNLESS OTHERWISE SPECIFIED:

0 PLC	± –
1 PLC	± –
2 PLC	± 0.38 [.015]
3 PLC	± –
4 PLC	± –
ANGLES	± –

MATERIAL: BRASS

FINISH: SEE TABLE

DWN JR RUTH 4/11/94
CHK P FORTNEY 4/11/94
APVD P DESANTIS 4/11/94
PRODUCT SPEC –
APPLICATION SPEC 114–2036
WEIGHT –

TE Connectivity

NAME: RECEPTACLE, FASTON,™ 4.75 [.187] SERIES

SIZE	CAGE CODE	DRAWING NO	RESTRICTED TO
A3	00779	C-63785	–

CUSTOMER DRAWING

SCALE 5:1 SHEET 1 OF 1 REV C