Feb.1.2018 Copyright 2018 HIROSE ELECTRIC CO., LTD. All Rights Reserved.

	COUNT	DESCRIPTION OF REVISIONS	BY	CHKD	DATE		COUNT	DESCRIPTION OF REVISIONS	BY	CHKD	DATE
1	3	DIS-H-002465	T.O	H.U	'07.09.25						. .
					. .						. .
					. .						. .

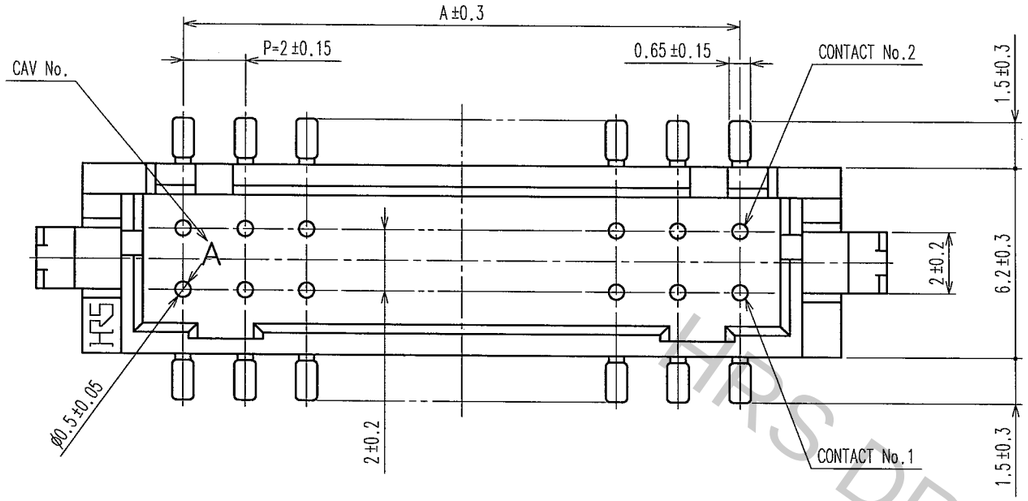

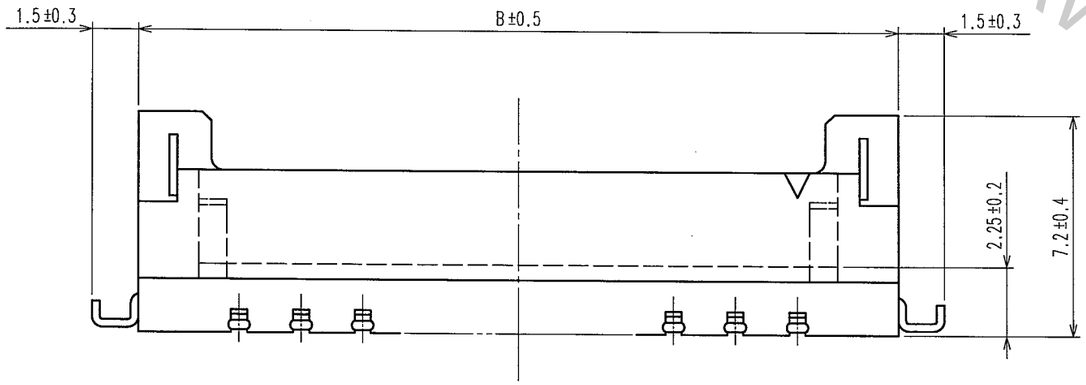

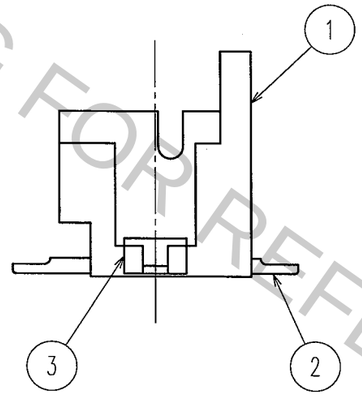

CODE No.	PART No.	NUMBER OF CONTACT	A	B	C
CL543-2047-4-27	DF11CZ- 4DP-2V(27)	4	2	8.5	8.7
CL543-2048-7-27	DF11CZ- 6DP-2V(27)	6	4	10.5	10.7
CL543-2049-0-27	DF11CZ- 8DP-2V(27)	8	6	12.5	12.7
CL543-2050-9-27	DF11CZ-10DP-2V(27)	10	8	14.5	14.7
CL543-2051-1-27	DF11CZ-12DP-2V(27)	12	10	16.5	16.7
CL543-2052-4-27	DF11CZ-14DP-2V(27)	14	12	18.5	18.7
CL543-2053-7-27	DF11CZ-16DP-2V(27)	16	14	20.5	20.7
CL543-2054-0-27	DF11CZ-18DP-2V(27)	18	16	22.5	22.7
CL543-2055-2-27	DF11CZ-20DP-2V(27)	20	18	24.5	24.7
CL543-2056-5-27	DF11CZ-22DP-2V(27)	22	20	26.5	26.7
CL543-2057-8-27	DF11CZ-24DP-2V(27)	24	22	28.5	28.7
CL543-2058-0-27	DF11CZ-26DP-2V(27)	26	24	30.5	30.7
CL543-2059-3-27	DF11CZ-28DP-2V(27)	28	26	32.5	32.7
CL543-2060-2-27	DF11CZ-30DP-2V(27)	30	28	34.5	34.7
CL543-2061-5-27	DF11CZ-32DP-2V(27)	32	30	36.5	36.7
CL543-2062-8-27	DF11CZ-40DP-2V(27)	40	38	44.5	44.7

RECOMMENDED PATTERN(2:1)

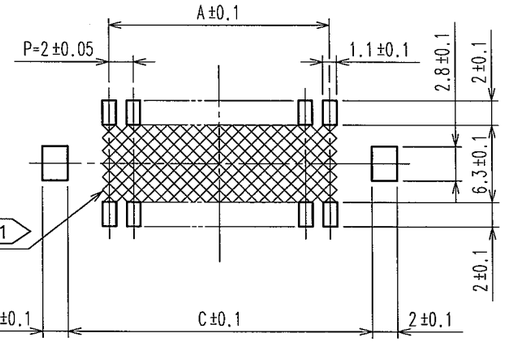

NOTES 1 IF THERE IS PATTERN ON ▒ PART, THERE IS A POSSIBILITY THAT IT WILL MAKE CONTACT WITH THE LEADS.
2 LEAD CO-PLANARITY INCLUDE REINFORCED METAL FITTINGS SHALL BE 0.1mm MAX.

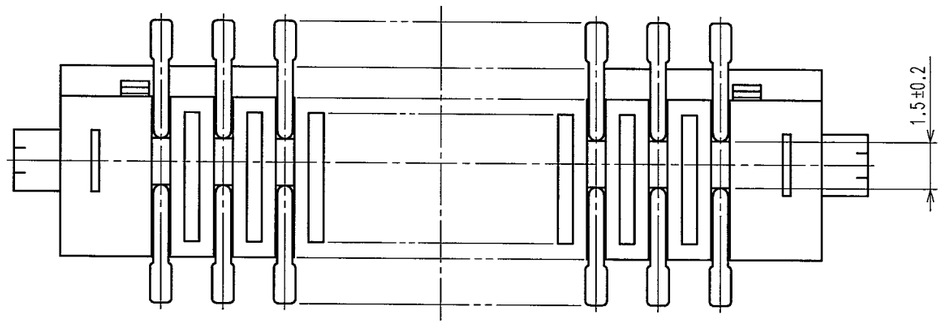

NO.	MATERIAL	FINISH, REMARKS
2	BRASS	SURFACE:TIN PLATED 1μm min UNDER PLATING:NICKEL PLATED 0.5μm min
1	POLYAMIDE	UL94V-0, NATURAL(BEIGE)

NO.	MATERIAL	FINISH, REMARKS
6	POLYESTER	CLEAR(COVER TAPE)
5	6 J	CLEAR(EMBOSSED CARRIER TAPE)
4	POLYAMIDE	BLACK(ADSORPTIVE CAP)
3	BRASS	TIN PLATED 1μm min

CODE NO.(OLD)	DRAWN	DESIGNED	CHECKED	APPROVED	RELEASED
	A.Miura '06.04.06	N.Hirose '06.04.06	H.Umehara '06.04.06	T.Oma '06.04.06	

SCALE 5 : 1
UNITS mm

DRAWING NO. EDC3-307176-02

HRS HIROSE ELECTRIC CO., LTD

PART NO. DF11CZ-*DP-2V(27)

CODE NO. CL543-

1/2

TO

FOR REFERENCE HRS DRAWING

Feb.1.2018 Copyright 2018 HIROSE ELECTRIC CO., LTD. All Rights Reserved.

	COUNT	DESCRIPTION OF REVISIONS	BY	CHKD	DATE		COUNT	DESCRIPTION OF REVISIONS	BY	CHKD	DATE
△					. .	△					. .
△					. .	△					. .
△					. .	△					. .

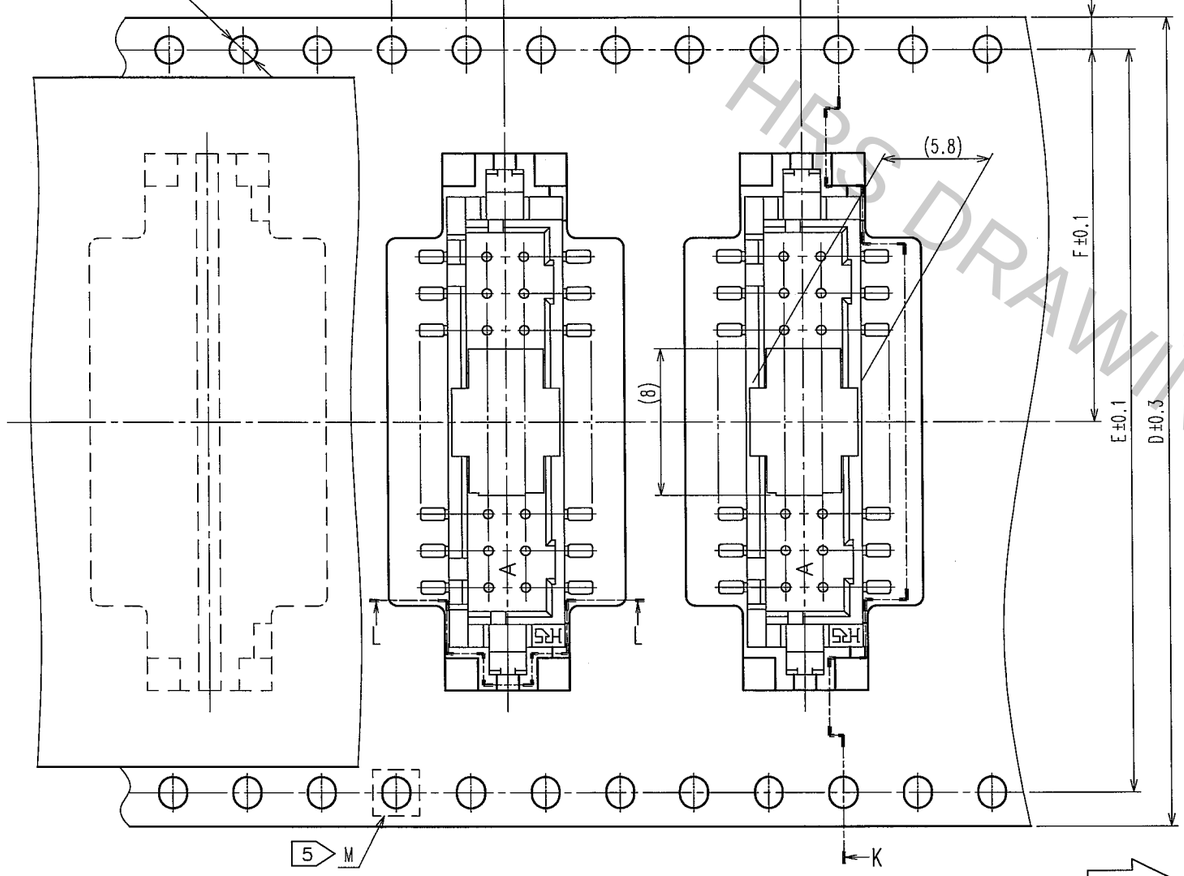

STYLE AND DIMENSION OF REEL

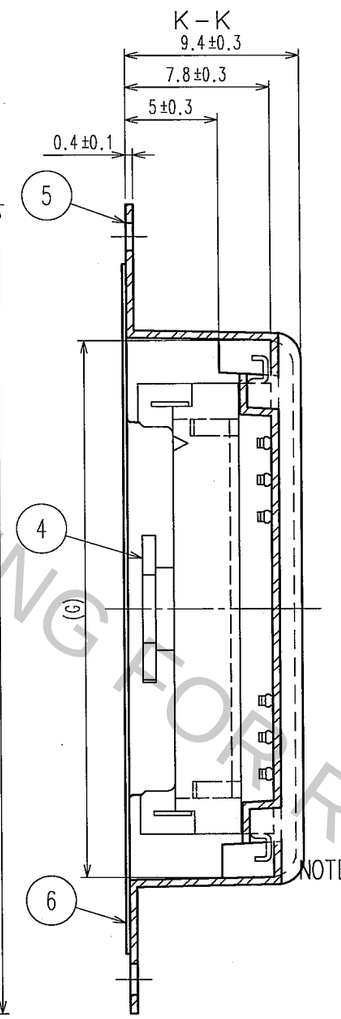

DIRECTION OF UNREELING

PART No.	NUMBER OF CONTACT	D	E	F	G	H	J (6)
DF11CZ- 4DP-2V(27)	4	24.0	—	11.5	13.2	24.4	PS
DF11CZ- 6DP-2V(27)	6	24.0	—	11.5	15.2	24.4	A-PET
DF11CZ- 8DP-2V(27)	8	24.0	—	11.5	17.2	24.4	PS
DF11CZ-10DP-2V(27)	10	32.0	28.4	14.2	19.2	32.4	PS
DF11CZ-12DP-2V(27)	12	32.0	28.4	14.2	21.2	32.4	PS
DF11CZ-14DP-2V(27)	14	44.0	40.4	20.2	23.2	44.4	PS
DF11CZ-16DP-2V(27)	16	44.0	40.4	20.2	25.2	44.4	A-PET
DF11CZ-18DP-2V(27)	18	44.0	40.4	20.2	27.2	44.4	A-PET
DF11CZ-20DP-2V(27)	20	44.0	40.4	20.2	29.2	44.4	PS
DF11CZ-22DP-2V(27)	22	44.0	40.4	20.2	31.2	44.4	PS
DF11CZ-24DP-2V(27)	24	56.0	52.4	26.2	33.2	56.4	PS
DF11CZ-26DP-2V(27)	26	56.0	52.4	26.2	35.2	56.4	A-PET
DF11CZ-28DP-2V(27)	28	56.0	52.4	26.2	37.2	56.4	A-PET
DF11CZ-30DP-2V(27)	30	56.0	52.4	26.2	39.2	56.4	PS
DF11CZ-32DP-2V(27)	32	56.0	52.4	26.2	41.2	56.4	PS
DF11CZ-40DP-2V(27)	40	72.0	68.4	34.2	43.2	72.4	PS

L-L

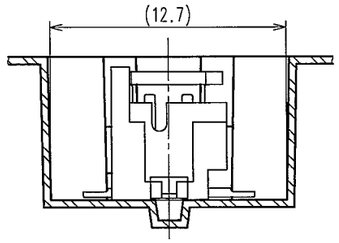

M(10:1)

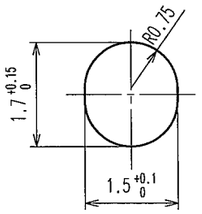

NOTES 3 1 REEL:500 CONNECTORS.
4 AT THE BIGINNING OF THE REEL, 15 COMPONENTS SHALL BE EMPTY. AT THE END OF THE REEL, 10 COMPONENTS SHALL BE EMPTY.
5 WHEN THE TAPE WIDTH IS 32,44 AND 56mm,SPROCKET HOLES SHALL BE SET ON BOTH SIDES OF REEL AS SHOWN ON THIS DRAWING.
6 THE MATERIAL OF THE EMBOSSED CARRIER TAPE REFERS TO THE TABLE.
7 DETAIL OF PART No. LABEL IS WRITTEN IN JAPANESE.
△1 8 THE REEL IS POLYETHYLENE PACKAGED WITH AN DRY AGENT INSIDE FOR MOISTURE-PROOF PACKAGING.
△1 9 FOR THE STORAGE OF 168 HOURS OR MORE AFTER OPENING THE PACKAGE, KEEP THE PRODUCTS UNDER MOISTURE PROOF CONDITIONS.
△1 10 EXCEPT ON THE MATING SURFACE, COMPONENT INFLATION DOES NOT AFFECT THE PRODUCTS PERFORMANCE.

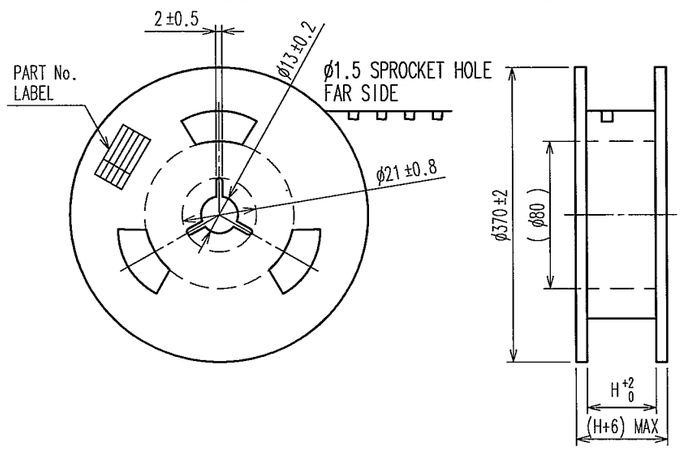

SUPPLIER
QUANTITY
PART No.
CODE No.
DATE OF MANUFACTURED

7 DETAIL OF PART No. LABEL

生産月日	年 月 日
図番	CL543-****-*-27
品名	DF11CZ-*DP-2V(27)
納入数量	500 KO
納入者	ヒロセ電機株式会社

CODE NO.(OLD)	DRAWN	DESIGNED	CHECKED	APPROVED	RELEASED
	A.Miura '06.04.06	N.Hirose '06.04.06	H.Umehara '06.04.06	T.Oma '06.04.06	

SCALE FREE
UNITS mm

DRAWING NO. EDC3-307176-02

PART NO. DF11CZ-*DP-2V(27)

HRS HIROSE ELECTRIC CO., LTD

CODE NO. CL543-

2

TO

HRS DRAWING FOR REFERENCE ONLY