RoHS compliant

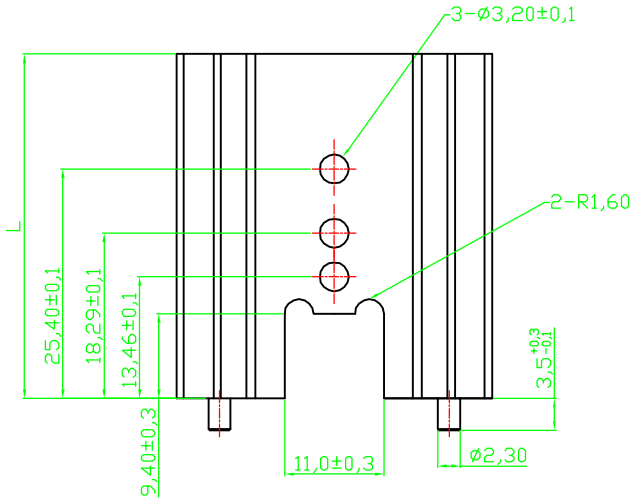

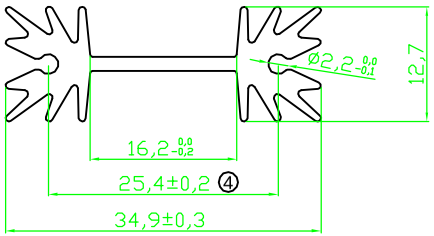

Material : AL 6063-T5 BL-005
PIN: CRS Tin Plated
Finished: Black anoized
Unmarked round angle R is 5mm.

Option	L	Thermal resistance(K/W)
V7477Y	50.8	9

Scale	FREE					Date	Name	Customer-No.
TOLERANCE					Drawn	09.05.2011	Dean	Conrad P/N : 183950
X.	±X							
X.X	±X	④	Modify Dimention	09.05.2011	Jason	Approved	20.07.2010	Andy	ASSMANN WSW-No. V7477Y
UNIT	±0.2	③	Modify Dimention	20.07.2010	Alex				
DIM	TOL	②	Modify drawing layout	08.03.2010	Dean				Drawing-No. ASS 0866 HS rev04
X.°	±X°							
X.X°	±X°	①	Drawn	11.08.2009	Dean				
Angle	TOL	Id.	Modification	Date	Name				Replace Sheet

ASSMANN WSW components