THIS DRAWING IS UNPUBLISHED. RELEASED FOR PUBLICATION -,- .
© COPYRIGHT - BY TYCO ELECTRONICS CORPORATION. ALL RIGHTS RESERVED.

LOC	DIST
FT	0

REVISIONS

P	LTR	DESCRIPTION	DATE	DWN	APVD
	C	REVISED PER ECO-10-013617	26JUL10	HMR	CR

MATERIAL:
HOUSING: THERMOPLASTIC, UL94V-0, BLACK.
TERMINALS: BRIGHT TIN OVER COPPER ALLOY.
SCREWS: 6-32, STEEL, ZINC PLATING W/ CLEAR CHROMATE. (EXCEPT AS NOTED.)

ELECTRICAL:
UL/CSA
CLASS C: 20A, 300V.
CLASS D: 5A, 600V.
WIRE RANGE: 12-22 AWG.

MECHANICAL:
RECOMMENDED TORQUE: 7 IN-LB.
OPERATING TEMP.: 105°C MAX.

1 NICKEL PLATED BRASS SCREWS.

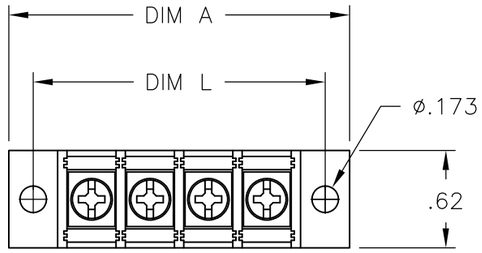

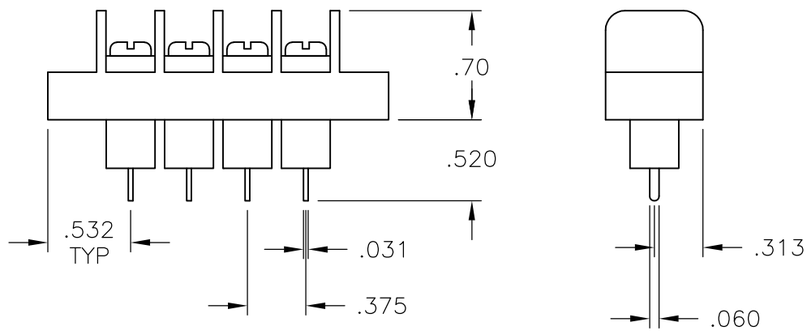

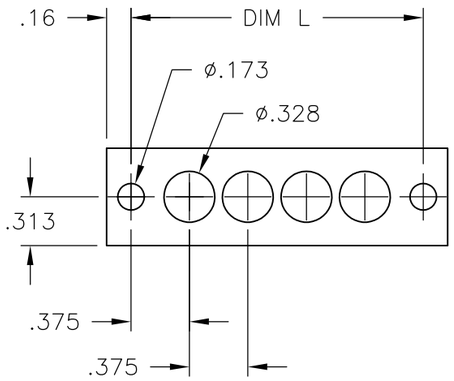

MOUNTING PANEL LAYOUT

	DIM L	DIM A	NO OF POS	CATALOG NUMBER	TE NUMBER
	9.000	9.314	23	JC6-E307-23	2-1546724-3
	8.625	8.939	22	JC6-E307-22	2-1546724-2
	8.250	8.564	21	JC6-E307-21	2-1546724-1
	7.875	8.189	20	JC6-E307-20	2-1546724-0
	7.500	7.814	19	JC6-E307-19	1-1546724-9
	7.125	7.439	18	JC6-E307-18	1-1546724-8
	6.750	7.064	17	JC6-E307-17	1-1546724-7
	6.375	6.689	16	JC6-E307-16	1-1546724-6
	6.000	6.314	15	JC6-E307-15	1-1546724-5
	5.625	5.939	14	JC6-E307-14	1-1543724-4
	5.250	5.564	13	JC6-E307-13	1-1546724-3
	4.875	5.189	12	JC6-E307-12	1-1546724-2
	4.500	4.814	11	JC6-E307-11	1-1546724-1
	4.125	4.439	10	JC6-E307-10	1-1546724-0
	3.750	4.064	9	JC6-E307-09	1546724-9
1	3.375	3.689	8	JC6-E305-08	2-1546724-8
	3.375	3.689	8	JC6-E307-08	1546724-8
1	3.000	3.314	7	JC6-E305-07	2-1546724-5
	3.000	3.314	7	JC6-E307-07	1546724-7
1	2.625	2.939	6	JC6-E305-06	2-1546724-7
	2.625	2.939	6	JC6-E307-06	1546724-6
1	2.250	2.564	5	JC6-E305-05	2-1546724-4
	2.250	2.564	5	JC6-E307-05	1546724-5
	1.875	2.189	4	JC6-E307-04	1546724-4
1	1.500	1.814	3	JC6-E305-03	2-1546724-6
	1.500	1.814	3	JC6-E307-03	1546724-3
	1.125	1.439	2	JC6-E307-02	1546724-2

THIS DRAWING IS A CONTROLLED DOCUMENT.

DIMENSIONS: INCHES

TOLERANCES UNLESS OTHERWISE SPECIFIED:
0 PLC ± -
1 PLC ± -
2 PLC ± .01
3 PLC ± .005
4 PLC ± -
ANGLES ± -

MATERIAL -
FINISH -

DWN S SCHLEGEL 3/10/05
CHK S. YODER 3/10/05
APVD S. YODER 3/10/05
PRODUCT SPEC —
APPLICATION SPEC —
WEIGHT —

Tyco Electronics
Tyco Electronics Corporation
Harrisburg, Pa 17105-3608

NAME JC6-E307-XX ASSEMBLY

SIZE	CAGE CODE	DRAWING NO	RESTRICTED TO
A3	00779	C-1546724	—

CUSTOMER DRAWING | SCALE NTS | SHEET 1 OF 1 | REV C