THIS DRAWING IS UNPUBLISHED. RELEASED FOR PUBLICATION -.- .
© COPYRIGHT - BY TYCO ELECTRONICS CORPORATION. ALL RIGHTS RESERVED.

LOC	DIST
AD	25

REVISIONS

P	LTR	DESCRIPTION	DATE	DWN	APVD
	A	RELEASED	28OCT05	JDP	AMS

1. HOUSING MATERIAL: GLASS-FILLED POLYMER.
2. CONTACT MATERIAL: COPPER ALLOY.
3. CONTACT FINISH: DIN 41612 CLASS 2 IN CONTACT AREA. TIN PLATE ON POSTS.
4. PART NUMBER, DATE CODE IDENTIFICATION, CSA LOGO IN THIS APPROXIMATE AREA.
5. CONTACT POINT.
6. RECOMMENDED HOLE SIZE FOR MANUAL APPLICATION OF CONNECTOR ONTO PC BOARD.

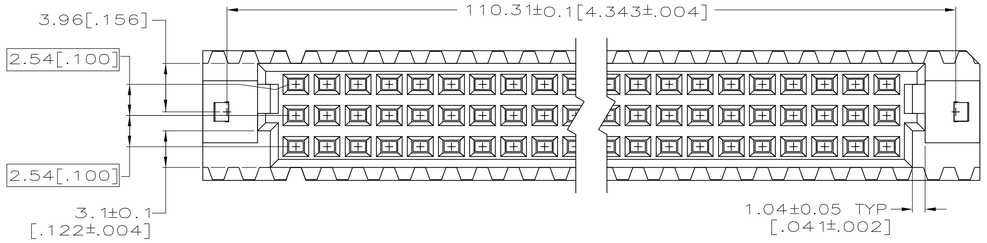

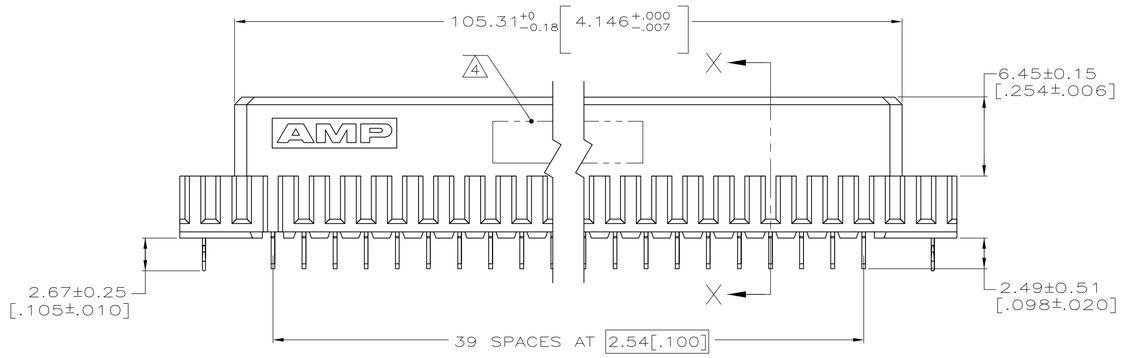

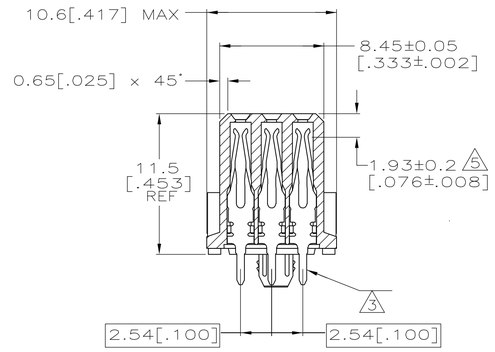

SECTION X-X

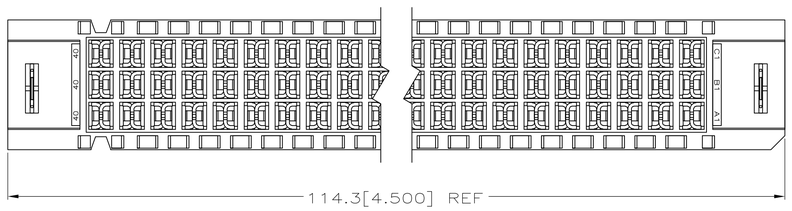

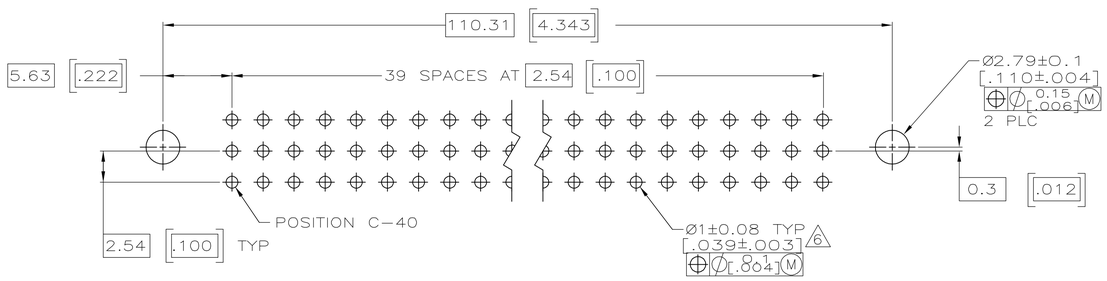

PC BOARD LAYOUT

1-40	X	X	X	120	5536489-5
POSITIONS LOADED	C	B	A	NO. OF LOADED POSITION	ASSY PART NUMBER
	ROWS LOADED				

THIS DRAWING IS A CONTROLLED DOCUMENT.

DIMENSIONS: mm [INCHES]

TOLERANCES UNLESS OTHERWISE SPECIFIED:
0 PLC ± -
1 PLC ± -
2 PLC ± -
3 PLC ± 0.13[.005]
4 PLC ± -
ANGLES ± -

MATERIAL 1 2
FINISH 3

DWN J. POLIGNONE 28OCT05
CHK A. SHARPE 28OCT05
APVD A. SHARPE 28OCT05
PRODUCT SPEC —
APPLICATION SPEC —
WEIGHT —

tyco Electronics
Tyco Electronics Corporation
Harrisburg, PA 17105-3608

NAME
ASSEMBLY, RECEPTACLE, EUROCARD, TYPE C, LEAD-FREE, 120 POSITION, 2.49[.098] SOLDER POSTS WITH BOARD-LOCKS

SIZE	CAGE CODE	DRAWING NO	RESTRICTED TO
A1	00779	C-5536489	—

CUSTOMER DRAWING | SCALE 4:1 | SHEET 1 OF 1 | REV A