wieland

Electrical
Connections

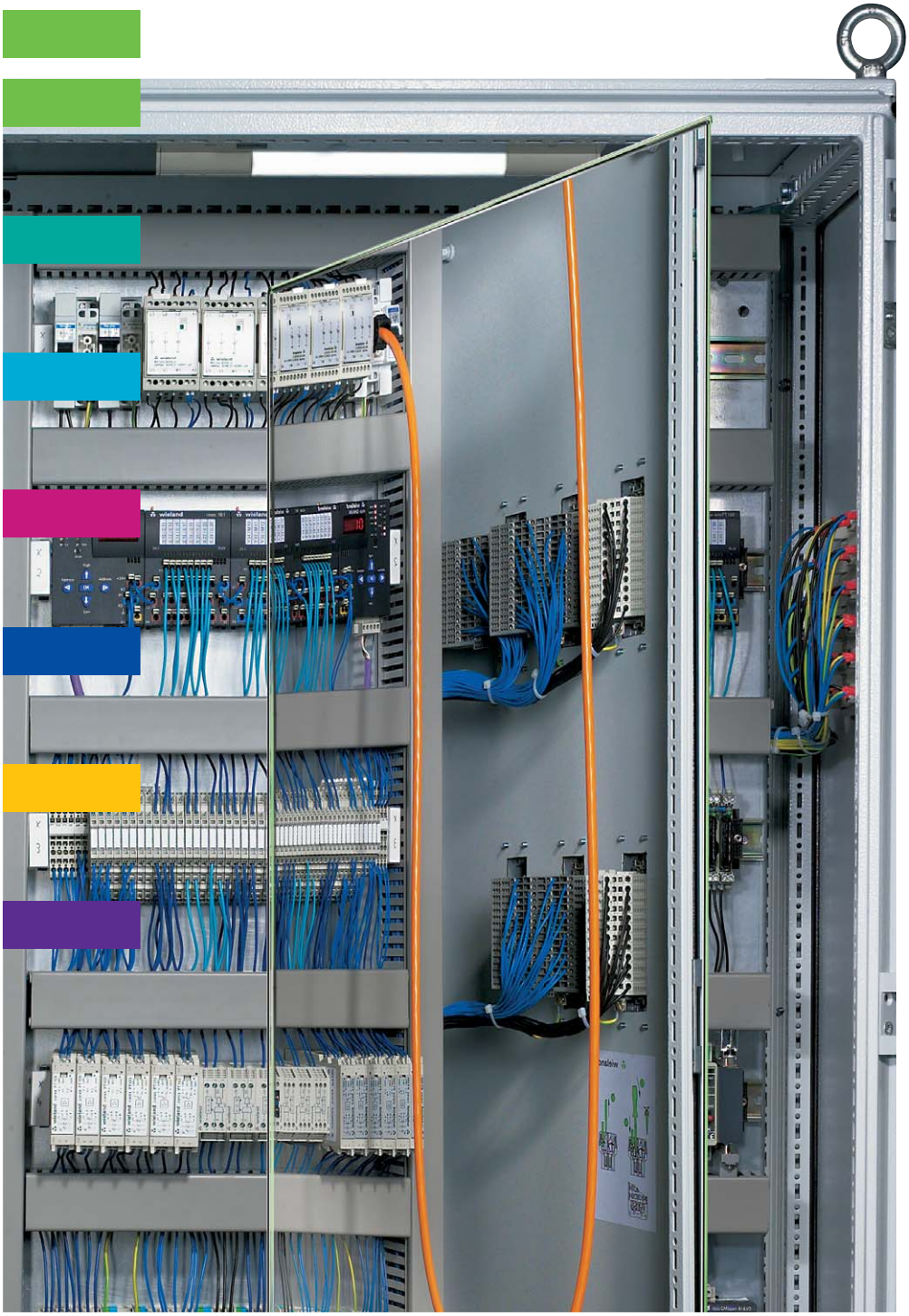

Best Connections.

0105.2 F 01/02

wieland

For more than 90 years, Wieland Electric has offered customers the broad product range, worldwide approvals, superior designs, unsurpassed quality, and custom development capabilites necessary to guarantee the most cost-effective, space-saving and time-saving interconnect solutions. More than just terminal blocks, Wieland's total offering includes products from PC board connectors to advanced electronic modules; I/O systems to DIN rail power supplies; and rectangular connectors to hazardous location components.
And more than just products, Wieland has the design support, application assistance and custom solutions necessary to meet your most challenging interconnect requirements.

The cornerstone of all Wieland products is the superior design and our philosophy of continuous improvement through innovation. Our high degree of vertical integration and attention to product detail enable our products not only to perform above established standards, but also to minimize the purchase cost as well as associated installation and maintenance costs.

Best by design, best product offering and best support.

**Wieland .... Best Connections.**

| Wieland Products and Industries Supported | Machine Manufacturers | Petrochemical | Heating, Ventalation & Air Conditioning | Process Controls & Instrumentation | Transportation | Water Treatment & Utilities | Telecommunications | Computers & Networking | Packaging & Material Handling | Automotive & Robotics |
|---|---|---|---|---|---|---|---|---|---|---|
| ***selos, fasis, taris*** DIN rail Mountable Terminal Blocks | ✓ | ✓ | ✓ | ✓ | ✓ | ✓ | | | ✓ | ✓ |
| ***flare*** Electro-Mechanical & Solid State Relay Modules | ✓ | ✓ | ✓ | ✓ | ✓ | ✓ | | | ✓ | ✓ |
| Signal Conditioning & Surge Suppression Modules | ✓ | ✓ | ✓ | ✓ | ✓ | ✓ | | ✓ | ✓ | ✓ |
| ***ricos*** Remote Interface Communication System | ✓ | ✓ | ✓ | | ✓ | ✓ | | ✓ | ✓ | ✓ |
| ***wipos*** DIN Rail Mounted Power Supplies | ✓ | | ✓ | ✓ | ✓ | ✓ | | | ✓ | ✓ |
| Standard & Custom Interface Modules | ✓ | ✓ | ✓ | ✓ | ✓ | ✓ | ✓ | ✓ | ✓ | ✓ |
| ***revos*** Industrial Multipole Connectors | ✓ | ✓ | | ✓ | ✓ | ✓ | | ✓ | ✓ | ✓ |
| Wire Management Products | ✓ | ✓ | ✓ | ✓ | ✓ | ✓ | ✓ | ✓ | ✓ | ✓ |
| ***gesis*** ST Compact Connector System | ✓ | | ✓ | ✓ | ✓ | | | ✓ | ✓ | ✓ |
| ***wiecon*** Pluggable PC Board Terminal Strips | | ✓ | ✓ | ✓ | ✓ | | ✓ | ✓ | | |
| ***wiecon*** Modular PC Board Terminal Strips | | ✓ | ✓ | ✓ | | | ✓ | ✓ | | |
| ***europa*** & Compact Panel Mounted Terminal Strips | ✓ | ✓ | ✓ | ✓ | ✓ | ✓ | | | ✓ | ✓ |

U.S.A. • 49 International Road • Burgaw, NC 28425 • Phone (910) 259-5050 • Fax (910) 259-3691
Canada • 2889 Brighton Road • Oakville, Ontario L6H 6C9 • Phone (905) 829-8414 • Fax (905) 829-8413

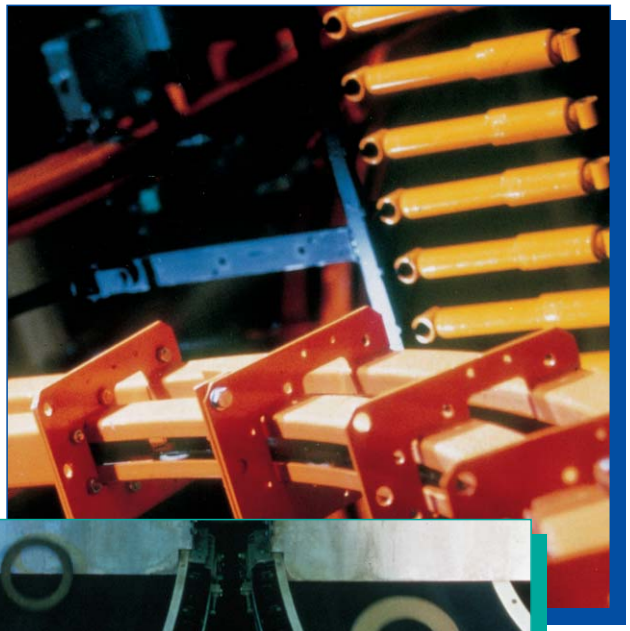

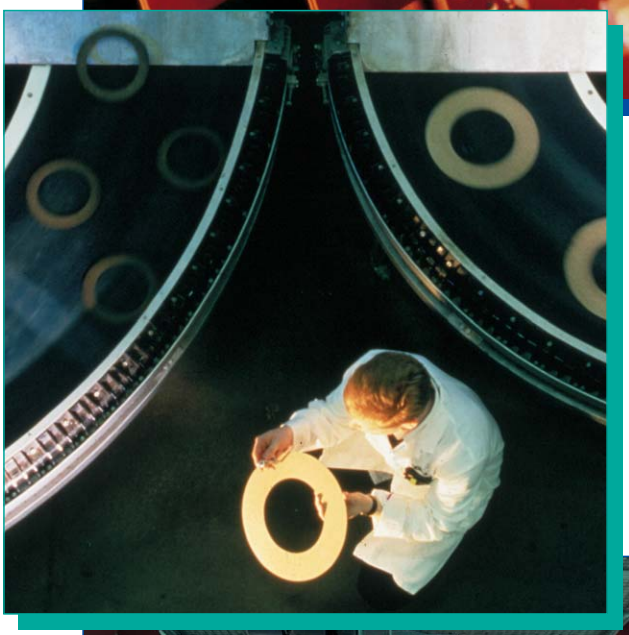

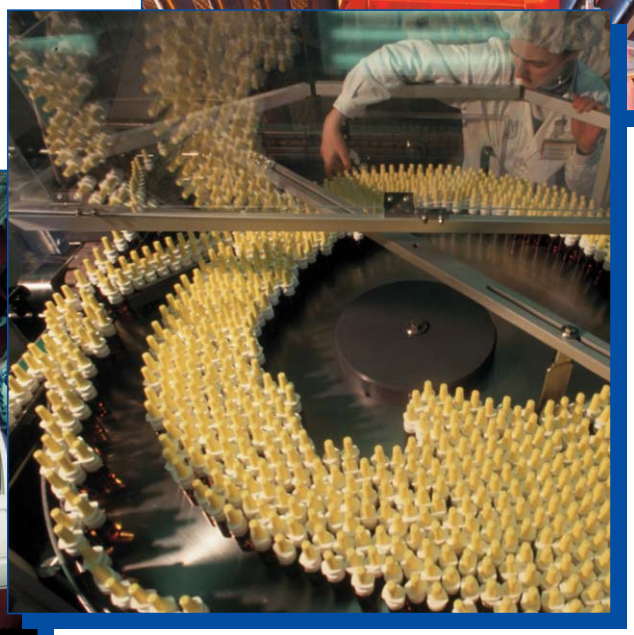

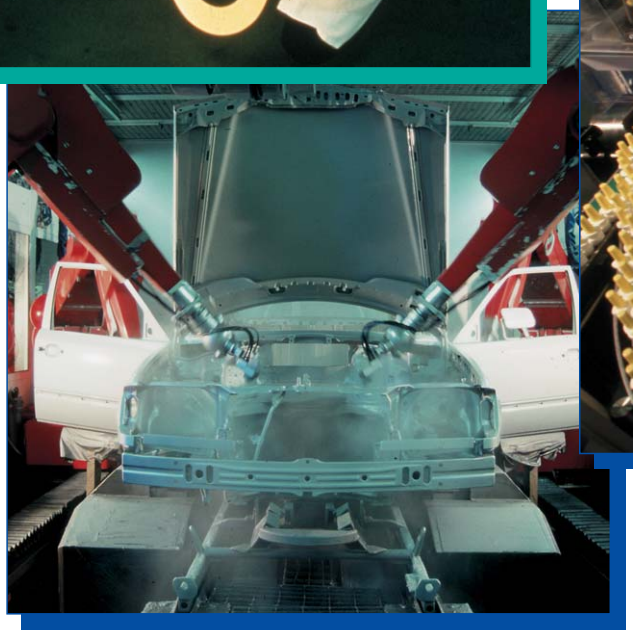

# wieland

***....serving industrial, manufacturing, and process control markets worldwide !***

**Wieland** special products and custom capabilities provide unique solutions for your specific application needs. **For more information** on how **Wieland** products can connect you to your future designs, call ***1-800-wieland*** or visit us at

***www.wielandinc.com***

*Best Connections.*

**fasis** DIN Rail Terminal Blocks – Spring Clamp Connection

**selos** DIN Rail Terminal Blocks – Screw Clamp Connection

**taris** DIN Rail Terminal Blocks – IDC Connection

**appliance** TERMINALS

**wiecon** PC Board Connectors

**electronics**

**gesis**® Connector Systems

**revos** Industrial Multipole connectors

**facts** & DATA

# contents

DIN rail terminal blocks for TS35, type WKF
Multi-conductor terminal blocks
Application specific terminal blocks
Micro modular feed through blocks for TS15, type WKFM
Terminal blocks for electrical installations, type WKIF

---

DIN rail terminal blocks for electrical installations, type WKI
DIN rail terminal blocks with U foot, type WK/WKN
Feed through blocks for large cross section conductors
Multi-conductor terminal blocks
Application specific terminal blocks
DIN rail terminal blocks with extruded clamping body for TS35, type 9700A
TOP connector system
Busbar components
Stacking coordinates

---

DIN rail terminal blocks for TS35, type WKC
Multi-conductor terminal blocks with U foot
Application specific terminal blocks
Hybrid terminal blocks

---

Terminal strips
Lighting and appliance terminals
Plug/screw terminal strips
Terminal boxes
Divisible terminal strips
Mains connectors for appliance wiring

---

Pluggable PC board connectors, Insulated headers and pin strip headers, two piece design
DIN rail terminal blocks with pluggable connection for PC board connectors
Pluggable PC board connectors, edge card
PC board connectors
PC board connectors, 2-tier version
PC board connectors, 3-tier version
PC board connectors, 4-tier version
Special-purpose connectors, RAST 5 connection style
Feed through modules for control cabinets

---

Distributed I/O modules
Relay modules
Analog signal conditioning
Wieland power supply
Wieland Electronic modules
Wieland interface system
Empty housings for electronic components

---

**Separate catalog – please order your copy at:**

**www.gesis.com**
**info@wielandinc.com**

The pluggable electrical system

---

Standard – 400 V, 500 V, 400/690 V, cable to cable coupling, EMC etc.
Modular system
3 to 8 pole connectors
High-density connectors
24 pole connectors
Data cable feed through, D-Sub connections, bus system connections, fiber optic
Pg thread cable glands
High amperage connectors
Motor starter components

**Pg threads are still available**

---

Preparation of conductor ends with
– ferrules
– tools
Technical explanations
Tables
Approvals

---

Table of contents, structured as per
– type description
– part number
General terms of sale and delivery

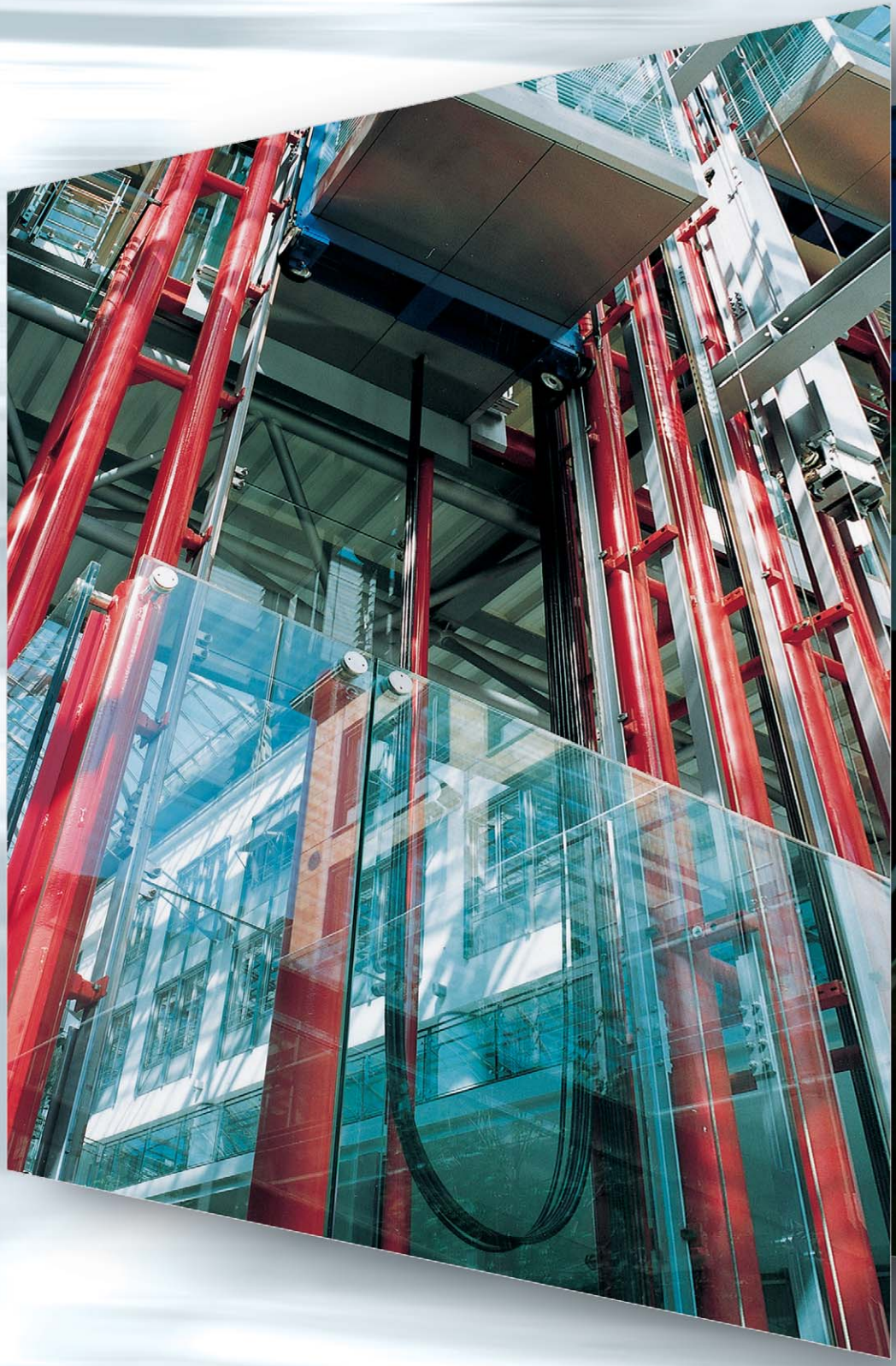

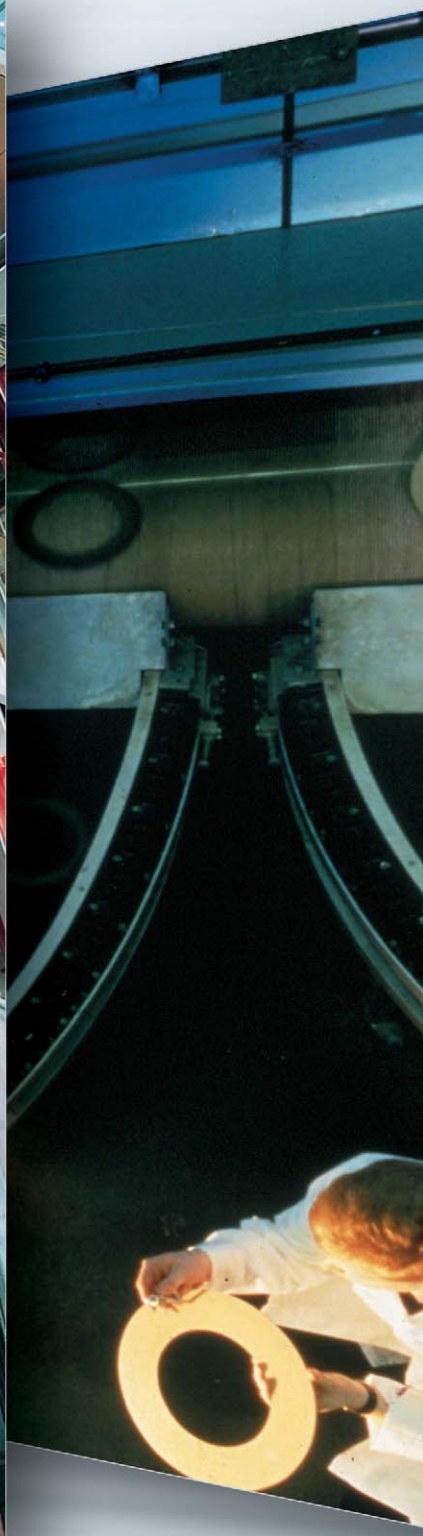

fasis

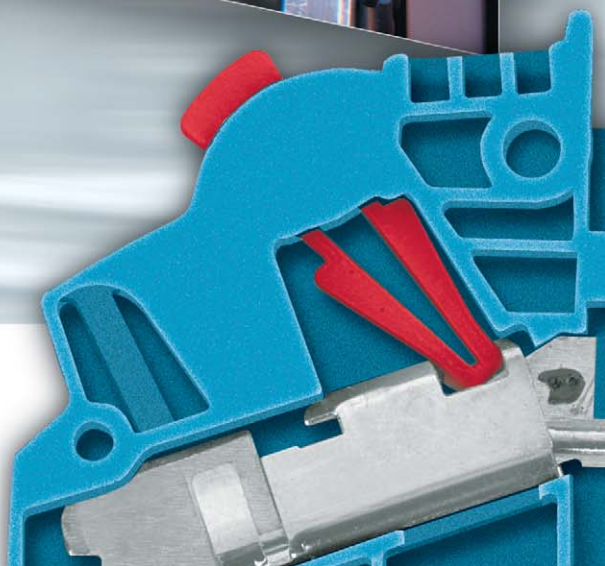

# DIN Rail Terminal Blocks

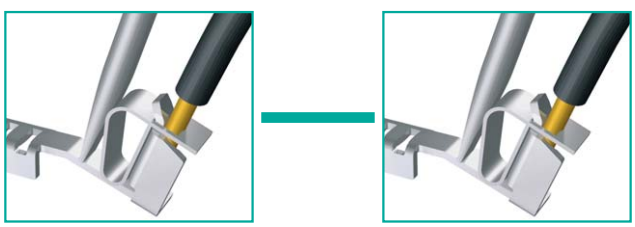

**fasis** DIN rail terminal blocks – spring clamp connection

BIT = Building
Installation
Technology

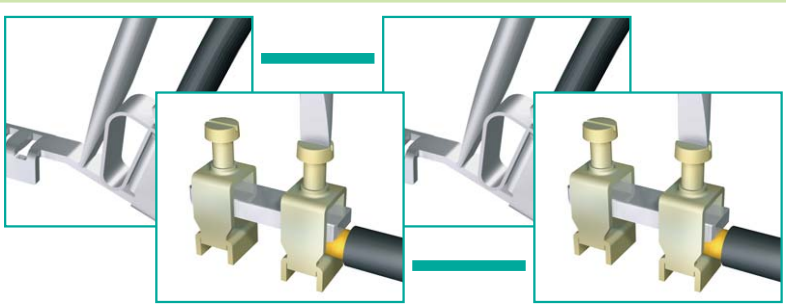

**fasis** BIT DIN rail terminal blocks – spring clamp connection

**selos** BIT DIN rail terminal blocks – screw clamp connection

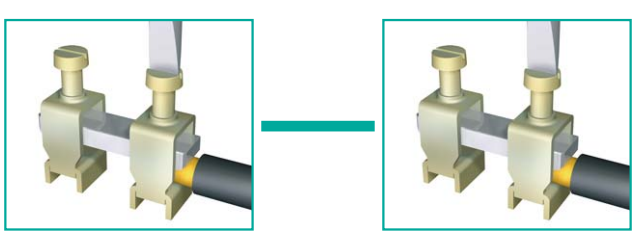

**selos** DIN rail terminal blocks – screw clamp connection

# CONTENTS


| | | |
|---|---|---|
| ***fasis*** **DIN rail terminal blocks with spring clamp connection, type WKF** | **Product overview and information** | Page 16 |
| | • Feed through blocks | Page 20 |
| | • Ground blocks | Page 22 |
| | • Neutral disconnect blocks | Page 24 |
| | • Supply blocks for junction boxes | Page 25 |
| | • Duo feed through blocks | Page 26 |
| | • Duo ground blocks | Page 28 |
| | • Multi-tier blocks | Page 30 |
| | DIN rail terminal blocks with spring and plug-in connection for PC board terminals | Page 34 |
| | • Duo feed through blocks with plug-in connection for PC board terminals | Page 36 |
| | • Disconnect blocks with fuse holder / diode plug | Page 38 |
| | • Knife-edge disconnect block | Page 39 |
| | • Micro modular feed through blocks, type WKFM | Page 40 |
| | Initiator and actuator blocks, type WKF 1.5 KO | Page 42 |
| | • Initiator and actuator blocks | Page 44 |
| **Accessories / marking accessories** | for DIN rail terminal blocks with spring clamp connection, type WKF | Page 46 |
| ***fasis BIT*** **Installation blocks, type WKI/WKIF** | **Product overview and information** | Page 50 |
| | **Installation blocks with spring clamp connection** | Page 56 |
| | • Installation blocks, type WKIF | Page 58 |
| | • Feed through blocks | Page 62 |
| | • Neutral disconnect blocks | Page 64 |
| | • Ground blocks | Page 66 |
| ***selos BIT*** **Installation blocks, type WK/WKI** | **Installation blocks with screw clamp connection** | Page 68 |
| | • Installation blocks, type WKI 4... | Page 72 |
| | • Feed through blocks | Page 78 |
| | • Neutral disconnect blocks | Page 80 |
| | • Ground blocks | Page 82 |
| | • PEN assembly block | Page 84 |
| **Accessories / marking accessories** | for DIN rail terminal blocks with screw clamp connection for junction boxes | Page 86 |
| ***selos*** **DIN rail terminal blocks with screw clamp connection, type WKN** | **Product overview and information** | Page 92 |
| | • Feed through blocks, type WK/WKN | Page 102 |
| | • Neutral disconnect block with U-foot | Page 106 |
| | • Ground blocks | Page 108 |
| | • Duo feed through blocks | Page 112 |
| | • Multi-tier feed through blocks | Page 116 |
| | • Initiator blocks | Page 118 |
| | • Disconnect blocks | Page 122 |
| | • Fuse blocks | Page 124 |
| | • Feed through blocks with fuse | Page 126 |
| | • Fuse block with NEOZED ®cartridge for TS 35 | Page 128 |
| | • Balance resistor terminals with trimmer potentiometer | Page 130 |
| | • Diode blocks | Page 131 |
| | • Thermal voltage terminals | Page 132 |
| | • Ground disconnect blocks | Page 133 |

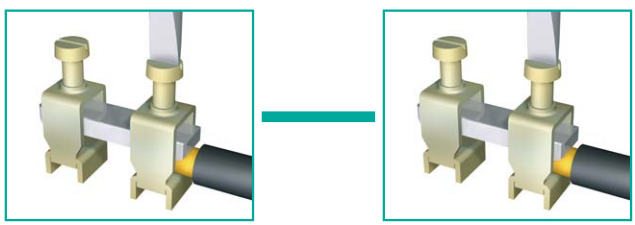

## selos DIN rail terminal blocks – screw clamp connection

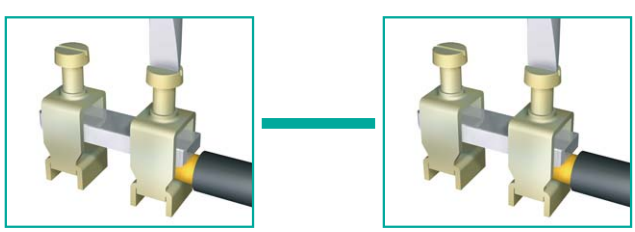

## selos CLASSIC LINE

DIN rail terminal blocks – screw clamp connection

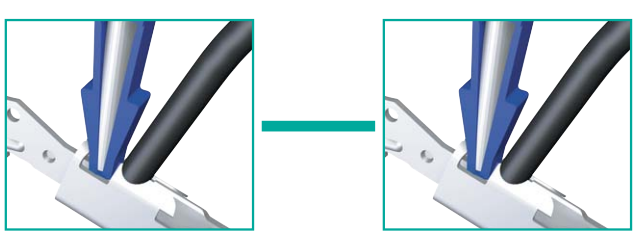

## taris DIN rail terminal blocks – IDC technology

# CONTENTS


| | | |
|---|---|---|
| **selos PLUG**<br><br>**selos MINI** | • Feed through blocks with pluggable connection for PC board terminals<br>• Feed through blocks / distribution blocks with screw / tab connection<br>• Feed-through blocks with solder connection<br>• Micro modular feed through blocks for TS 15 | Page 134<br>Page 138<br>Page 142<br>Page 144 |
| **Measuring disconnect blocks** | **Information** | Page 146 |
| **selos POWER LINE** | **Information**<br>• Stud-type terminal blocks for TS 32 and TS 35<br>• Feed-through blocks up to 240 $mm^2$ | Page 150<br>Page 152<br>Page 156 |
| **Accessories for DIN rail terminal blocks** | | Page 160 |
| **Marking accessories** | | Page 178 |
| **selos CLASSIC LINE, DIN rail terminal blocks with screw connection, type 9700 A.. S35** | **Product overview and information**<br>• Feed through blocks<br>• Neutral disconnect blocks<br>• Ground blocks<br>• PEN assembly block | Page 184<br>Page 190<br>Page 193<br>Page 194<br>Page 195 |
| **Accessories / marking accessories** | for DIN rail terminal blocks with screw clamp connection, type 9700 A/.. S35 | Page 196 |
| **TOP system** | **Information**<br>• Stacking coordinates 32pole<br>• Shield connection clamps, type SK<br>• Shield connection clamps, type SKN | Page 202<br>Page 206<br>Page 210<br>Page 212 |
| **Busbar components** | • Modular N and PE distributor terminals<br>• Modular pluggable connectors with screw clamp connection<br>• Compact pluggable connectors with screw clamp connection and coding<br>• Modular feed-through blocks with solder tab connector | Page 214<br>Page 216<br>Page 218<br>Page 219<br>Page 220 |
| **taris DIN rail terminal blocks with IDC technology, type WKC** | **Product overview and information**<br>• Feed through blocks, ground blocks<br>• Duo feed through blocks and duo ground blocks<br>• Multi-tier blocks, function blocks<br>• Knife-edge disconnect block<br>• Disconnect blocks | Page 222<br>Page 232<br>Page 234<br>Page 238<br>Page 240<br>Page 242 |
| **Hybrid DIN rail terminal blocks with IDC and screw connection, type WKC...S/C** | **Information**<br>• Hybrid feed through and ground blocks | Page 244<br>Page 232 |
| **Accessories / marking accessories** | for DIN rail terminal blocks with IDC technology | Page 248 |

# Software for DIN rail terminal blocks

# wieplan

- ❒ **Electronic catalog for terminal block assemblies**
- ❒ **Via software: drawing/part lists/order data**
- ❒ **Shopping cart function via www.wieland-electric.com**

**Part number**

**Software 95.502.1000.0**

**Manual 05.563.6389.0**

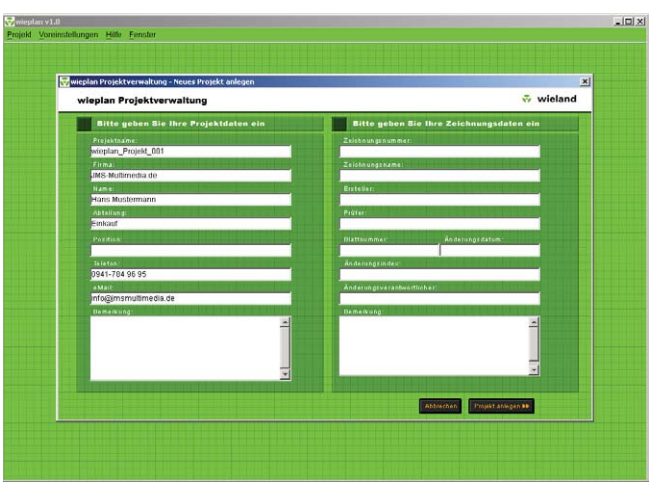


**Project management**

***wieplan*** enables you to clearly manage your projects and part projects.

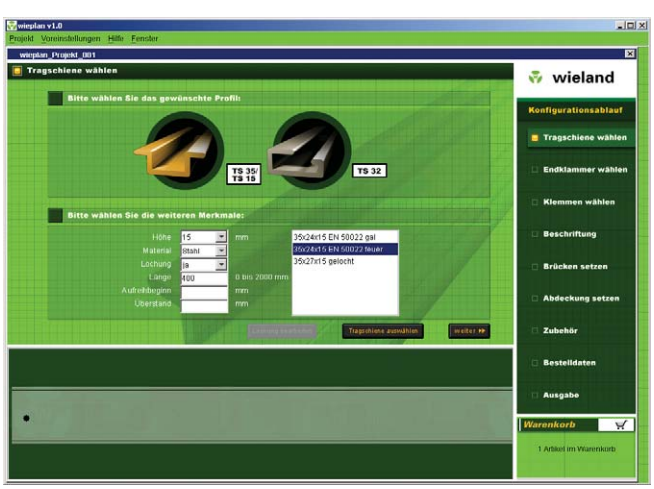


**Select a mounting rail**

You can select a mounting rail as per the following characteristcs:
– Type / rail design
– Length
– Solid or slotted

You can also define the length of the rail section left empty in front of the block assembly and the spaces between the individual blocks.

# wieplan

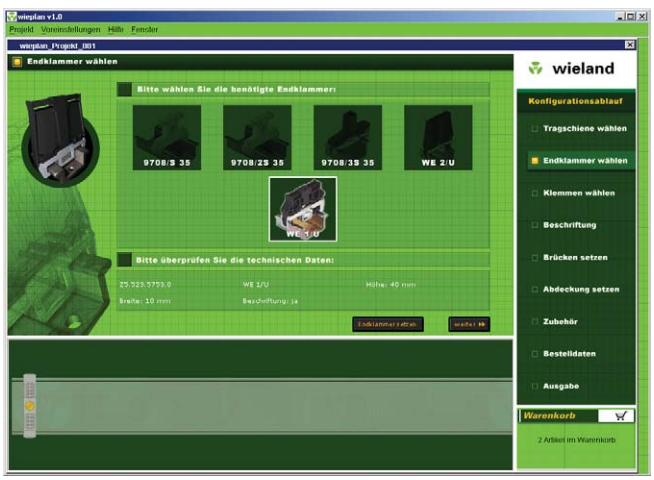


## Select an end clamp

You can select the end clamp which matches your selected mounting rail.

## Select the terminal blocks

Intuitive selection of terminal blocks based on certain characteristics such as function, current, voltage, cross section or as per block type or part number. After composition of the terminal block assembly, the blocks can be jumpered and/or marked, and further accessories can be added. You are offered the matching accessories for each selection. Plausibility checks are made with regard to end plates, partitions, covers and more.

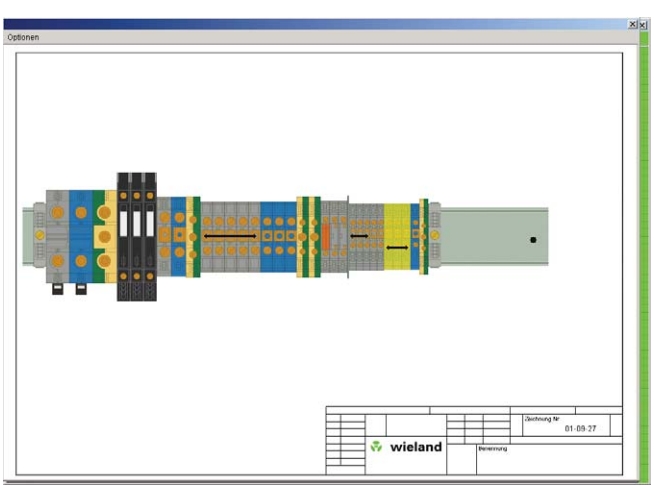


## Print-out and drawing

The completed terminal block assembly can be displayed on the screen in form of a drawing, or it can be exported as a electronic file. The block assembly can also be completely mounted or individual parts can be ordered online.

# DIN rail terminal blocks with spring clamp connection, type *WKF*

# *fasis*

| | |
|---|---|
| **Spring clamp connection** | **0.13 to 16 mm²** |
| **Standard DIN rail terminal blocks** | 2.5 to 16 mm² |
| **Installation terminal blocks** | 2.5 to 16 mm² |
| **Duo terminal blocks** | 2.5/4 mm² double/PCB |
| **Multi-tier blocks** | 1.5 mm² |
| **Disconnect blocks**<br>**Initiator/actuator terminal blocks** | 4 mm² |

***fasis*** for TS 35

- with all required accessories
- with snap-on marking accessories
- with DQS certification
- Flammability class accord. to UL 94 V-0/V-2

All Wieland Components which require CE general certification are CE certified, and identified with the CE logo.

fasis

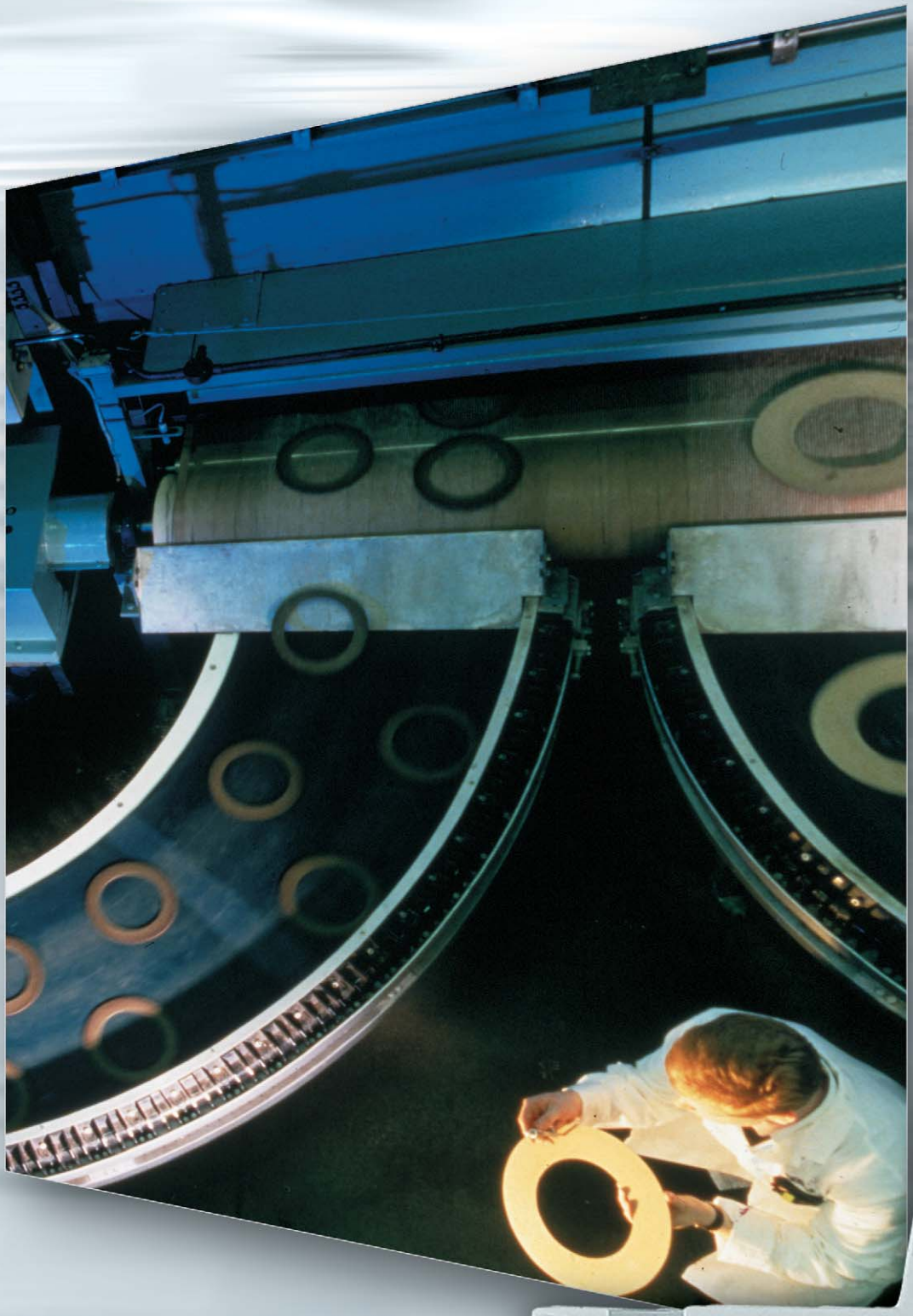

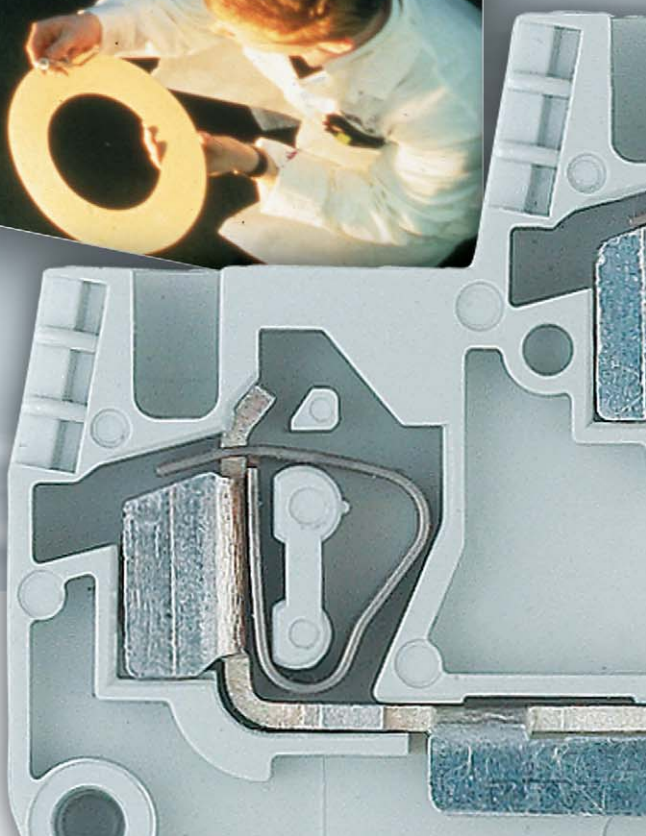

# DIN Rail Terminal Blocks

**with Spring Clamp Connection, Type *WKF***

# DIN rail terminal blocks with spring clamp connection, type *WKF*

**fasis**

| | 2.5 mm² (12 AWG) | 4 mm² (10 AWG) | 6 mm² (8 AWG) |
|---|---|---|---|
| Feed-through blocks | | | |
| Neutral feed-through blocks | | | |
| Ground blocks | | | |

## Standard DIN Rail Terminal Blocks

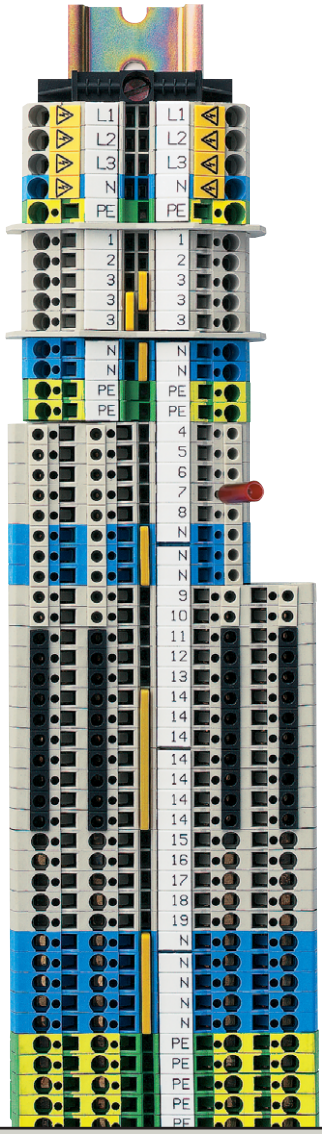


| | 1.5 mm² (14 AWG) | 4 mm² (10 AWG) |
|---|---|---|
| Feed-through | | |
| Branch Circuit VB | | |
| Feed-through and Ground D/SL | | |
| Ground | | |
| Electronic Component Addition | | |
| Double-tier block with pluggable connection | | |

## Double-tier blocks

Knife edge disconnect block

Disconnect block with fuse plug

Disconnect block with diode plug

## Disconnect

Feed-through blocks

Neutral disconnect blocks

Ground blocks

Sensor blocks with/without LED

| 10 mm² (6 AWG) | 16 mm² (4 AWG) |
|---|---|

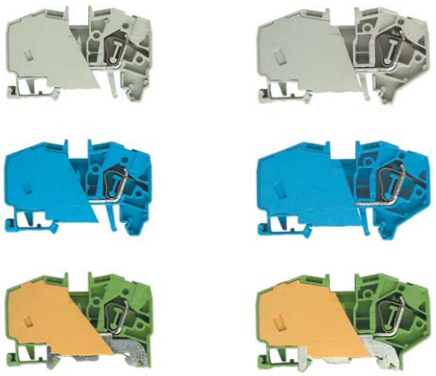

| 4 mm² (10 AWG) |
|---|

## blocks

| 2.5 mm² (12 AWG) | 4 mm² (10 AWG) | 16 mm² (4 AWG) |
|---|---|---|

see ***fasis*** BIT Section

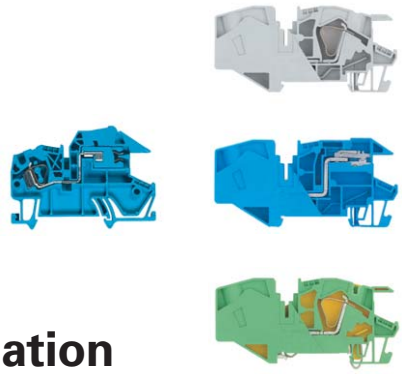

## Installation DIN Rail Terminal Blocks

| | 2.5 mm² (12 AWG) | 4 mm² (10 AWG) |
|---|---|---|
| Feed-through blocks | | |
| Neutral feed-through | | |
| Ground blocks | | |

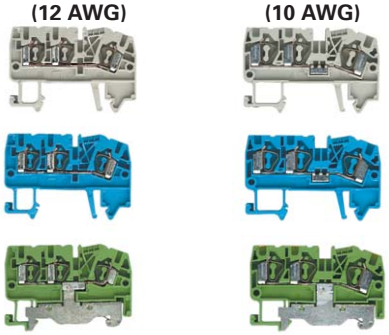

**Duo 1/2**

| | 2.5 mm² (12 AWG) |
|---|---|
| Feed-through block | |
| Duo feed-through block | |
| Neutral feed-through block | |
| Ground block | |

**Duo 2/2**

| | |
|---|---|
| Feed-through block with pluggable connection | |
| Neutral feed-through block with pluggable connection | |
| Ground block with pluggable connection | |

**Duo 2/8113**

## Duo DIN Rail Terminal Blocks

| KOE... | KOI 3L... | KOI 3L/SL... | KOA 2L... |
|---|---|---|---|

## Sensor and actuator blocks

# DIN rail terminal blocks with spring clamp connection, type *WKF*

**fasis**

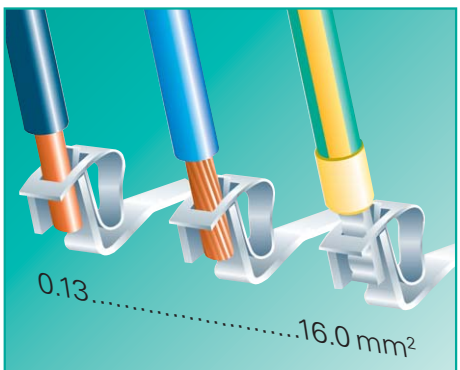


**System advantages**

❒ **Spring clamp connection,** screwless technology

Separation of electrical and mechanical functions

**Application advantages**

→ **Dynamic connections**
Protection of the connection against "cold flow" and creep

→ **Pre-programmed clamping force**
The clamping force required to connect the wire, is created by the spring element of the clamp

→ **Secure and maintenance-free electrical connection**
According to EN 60947-7-1

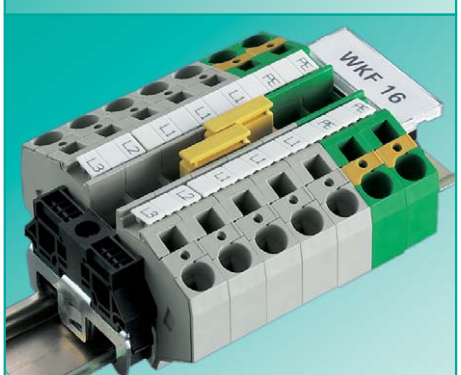


❒ **TOP connection**
Wire entry and screwdriver access in the same plane

❒ **Built in test points**

→ **Clear and neat wiring**
In small confined spaces

→ **Test points for test plugs** up to Ø 2.3 mm on all clamping points, without having to remove the connected wire

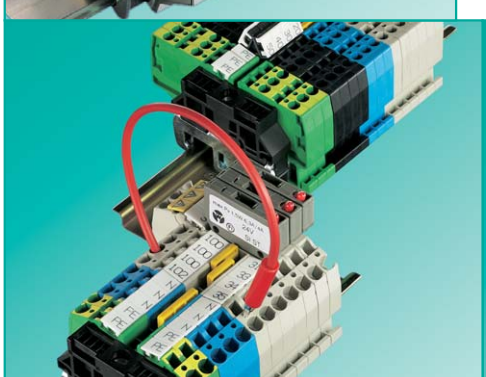

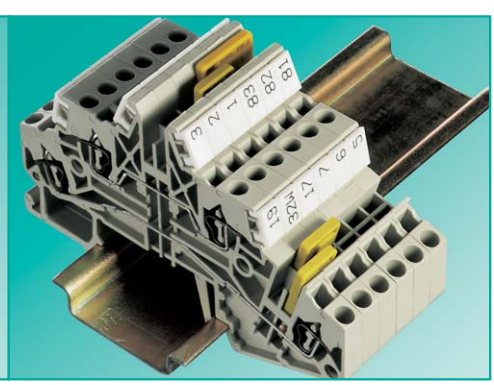

❒ **Economic system**

→ Time saving due to pluggable cross connectors in potential commoning

❒ **Fatigue-free handling**

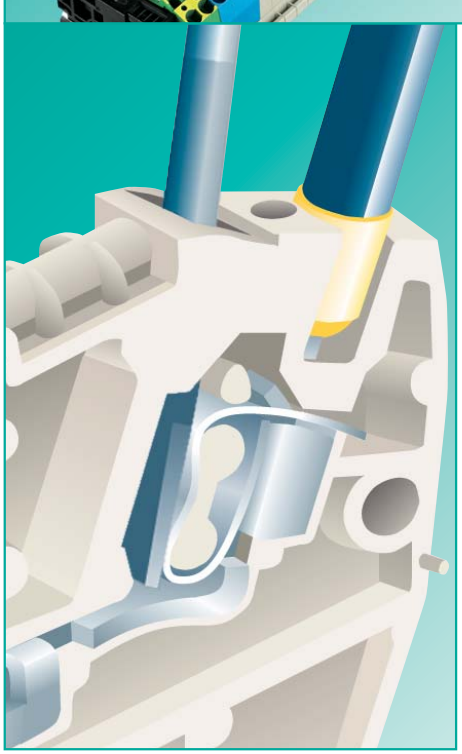

❒ **Connection capabilities**

The clamping bodies of the WKF series can take in any copper conductor types without ferrules

Due to the construction of the funnelled wire entry, stripped wires can be connected without fraying

→ Both solid and stranded wires can be connected to WKF terminal blocks with and without ferrules

❒ **Tool**

For optimal operation of our WKF terminal blocks we recommend the use of the following DIN 5264 screwdrivers with cylindric design and flat blades

| →Rated cross section | Blade dimensions of the screwdrivers |
|---|---|
| 14 AWG 1.5 mm² | 0.6 x 3.5 mm |
| 12 AWG 2.5 mm² | 0.6 x 3.5 mm |
| 10 AWG 4 mm² | 0.6 x 3.5 mm |
| 8 AWG 6 mm² | 0.8 x 4.0 mm |
| 6 AWG 10 mm² | 0.8 x 4.0 mm |
| 4 AWG 16 mm² | 1.0 x 5.5 mm |

# fasis

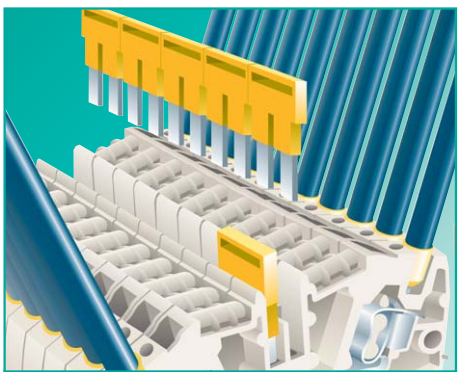

### Cross connection (Jumper Bars)

- ❒ The insulated cross connectors IVB WKF... are completely touch safe
- ❒ No partiton plates required between jumpered terminal groups of different potential
- ❒ The cross connectors IVB WKF... bear the same rated current as the terminal
- ❒ **For modular test plugs see page 177**

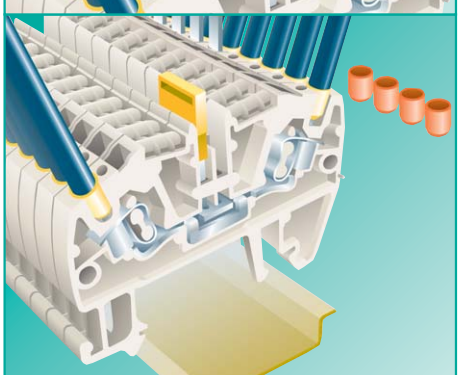

### Wire entry guides

- ❒ For the connection of wires with cross sections smaller than 18 AWG, we recommend the use of wire entry guides
- ❒ Wire entry guides prevent the wires from being inserted beyond the optimal clamping point and ensures a safe and secure connection

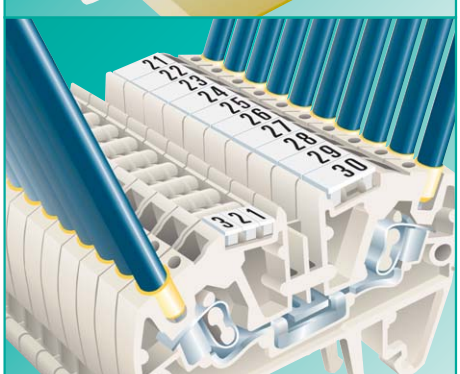

### Marking systems

- ❒ Marking facility is down the center so that the marking tag is not covered by the conductor
- ❒ Single marking tag in 5, 6, or 8 mm spacing
- ❒ Marking strips (10 tags) to snap on to the terminal blocks
- ❒ Tear-off marking strips for 3-digit marking facilities per block
- ❒ Custom marking upon request

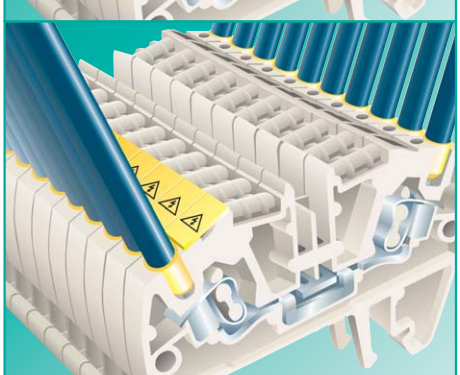

### Cover with warning symbol

- ❒ Cover with warning symbol ADC to snap on to blocks which are still live after switched-off (VDE 0113)
- ❒ Cover can only be removed with a screwdriver

### DQS certificates for all products

- ❒ Quality standard as per DIN ISO 9001 in Development, Production, Assembly
- ❒ Continued control of the quality standard by means of regular internal and external quality audits
- ❒ Compatible with certificates of other countries:
  – BSI Certificate, Great Britain
  – SQS Certificate, Switzerland
  – Aib-Vincotte Certificate, Belgium
  – ÖQS Certificate, Austria

### Material

❒ Metal parts

Special alloys and surface treatments provide low contact resistance and high corrosion resistance

Clamping spring: stainless CrNi steel

Current Carrying bar: tin-plated copper

❒ Insulating material

Polyamide has excellent electrical, chemical and mechanical characteristics

Insulating housing: Polyamide 66/6

Tracking resistance: CTI 600

Flammability class:

| | |
|---|---|
| Type WKF... | UL 94 V-0 |
| Type WKIF 16... | UL 94 V-2 |

(see also section ***facts*** & DATA)

Our ***wieplan*** software helps to plan your DIN rail terminal block assemblies (see page 10/11).

### Note

The information regarding cross-sectional areas and connection types pertains to wires without ferrules. Ferrules are not neccessary for secure connection.

The voltage ratings apply to the terminals in their intended application. When different products are mounted adjacent to each other, the proper isolation distances must be adhered to. For this purpose, **Wieland** offers a large selection of appopriate accessories.

If the ground blocks of the WKF series are not used in block assemblies but are mounted to the rail as single terminal blocks, end clamps have to be used.

A detailed description of technical data, the standards requirements, and the application conditions can be found in catalogue section ***facts*** & DATA.

# DIN Rail terminal blocks with spring clamp connection, type *WKF*

**fasis**

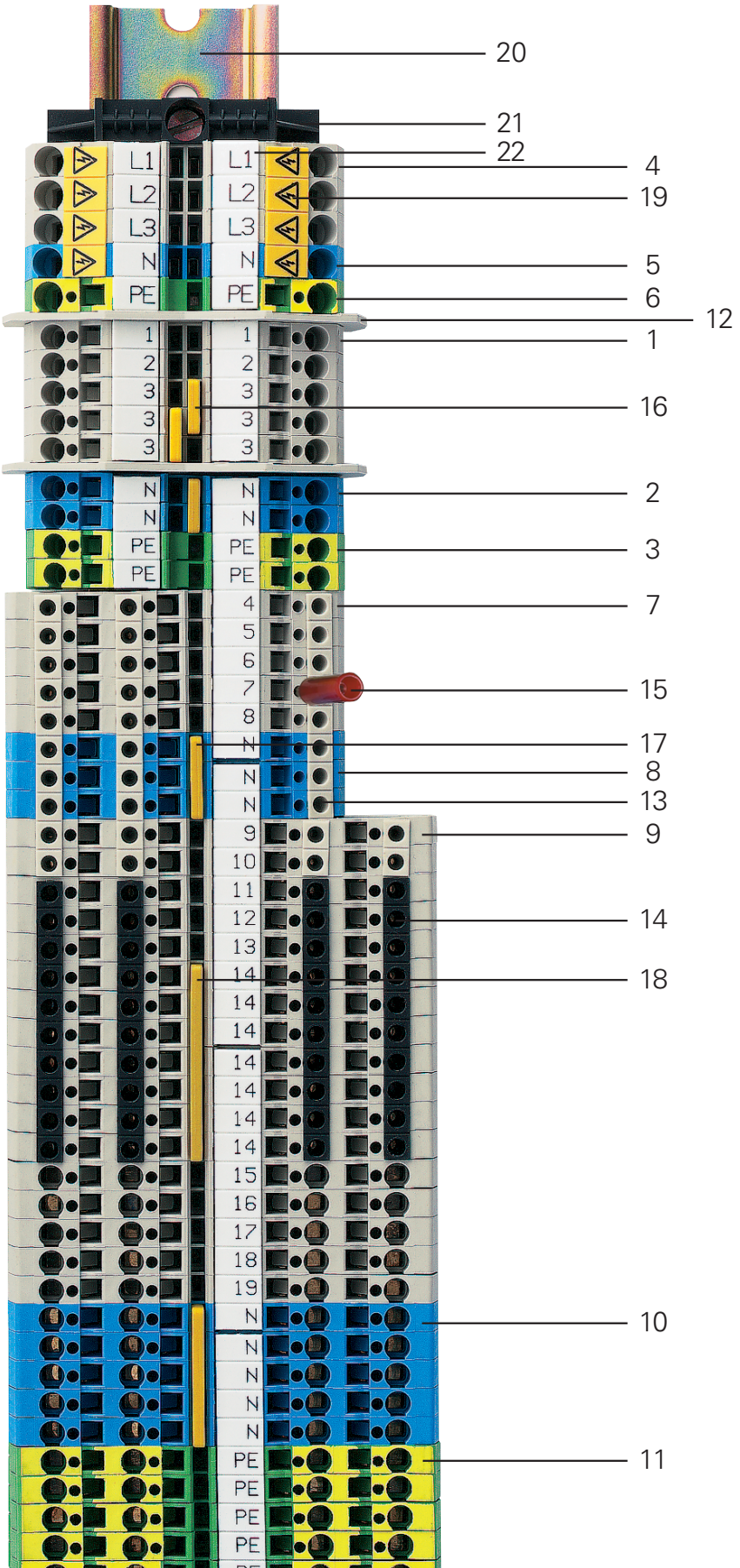

# *WKF* sample rail

fasis

| Pos. | Description | Type | Part. number |
|---|---|---|---|
| 1 | Feed-through block | WKF 2,5/35 | 56.703.0053.0 |
| 2 | Feed-through block, blue | WKF 2,5/35 BLAU | 56.703.0053.6 |
| 3 | Ground block | WKF 2,5 SL/35 | 56.703.9053.0 |
| 4 | Feed-through block | WKF 4/35 | 56.704.0053.0 |
| 5 | Feed-through block, blue | WKF 4/35 BLAU | 56.704.0053.6 |
| 6 | Ground block | WKF 4 SL/35 | 56.704.9053.0 |
| 7 | Duo feed-through block | WKF 2,5/D1/2/35 | 56.703.5053.0 |
| 8 | Duo feed-through block, blue | WKF 2,5/D1/2/35 BLAU | 56.703.5053.6 |
| 9 | Duo feed-through block | WKF 2,5/D2/2/35 | 56.703.5153.0 |
| 10 | Duo feed-through block, blue | WKF 2,5/D2/2/35 BLAU | 56.703.5153.6 |
| 11 | Duo ground block | WKF 2,5/D2/2/SL/35 | 56.703.9153.0 |
| 12 | Partition plate | TWF 2,5-4 | 07.312.2253.0 |
| 13 | Wire entry guide | LEL 2,5/2 GRAU | 05.561.6553.0 |
| 14 | Wire entry guide | LEL 2,5/3 SCHWARZ | 05.561.6753.0 |
| 15 | Test plug with insulated handle | WK 2,5/ST2/2,3 | Z5.553.2921.0 |
| 16 | Cross connector, insulated | IVB WKF 2,5-2 | Z7.280.6227.0 |
| 17 | Cross connector, insulated | IVB WKF 2,5-3 | Z7.280.6327.0 |
| 18 | Cross connector, insulated | IVB WKF 2,5-7 | Z7.280.6727.0 |
| 19 | Cover with warning symbol | ADF 4/4 GELB | 04.343.6153.8 |
| 20 | Mounting rail | 35x27x7,5 gelocht | 98.300.1000.0 |
| 21 | End clamp | 9808/2 S35 | Z5.522.8553.0 |
| 22 | Marking strips | 9705 A/6/10 B | 04.856.0453.0 |

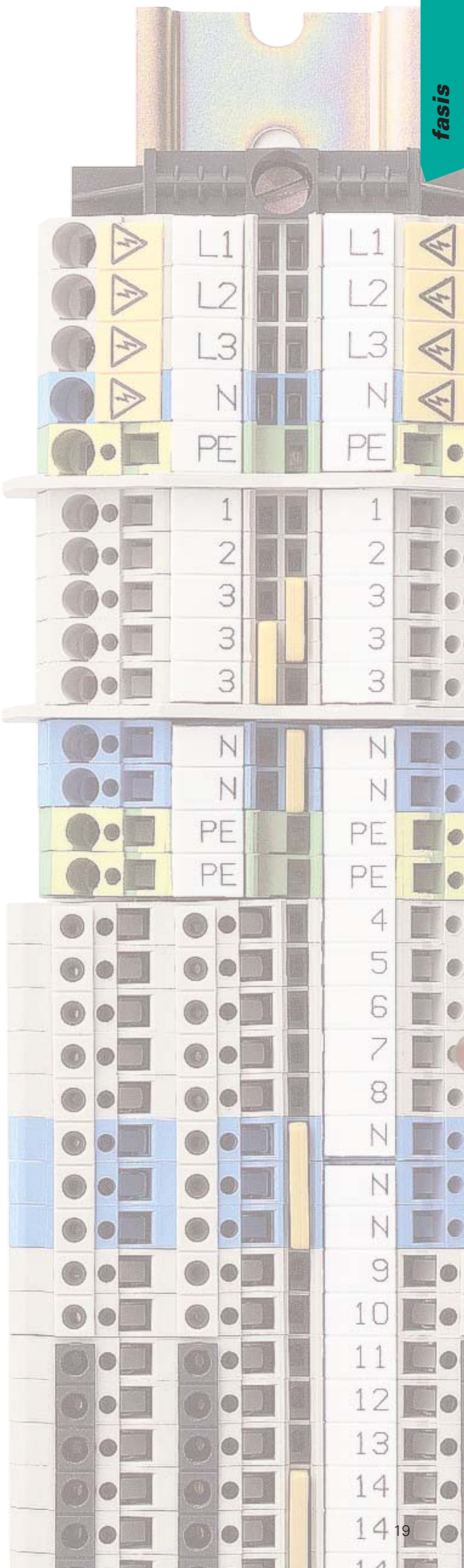

# Feed-through blocks with spring clamp connection, type *WKF*

**fasis**

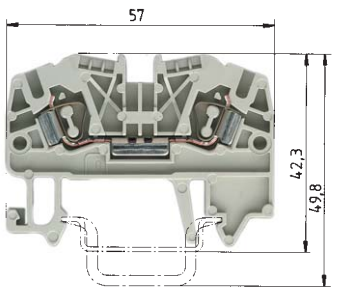


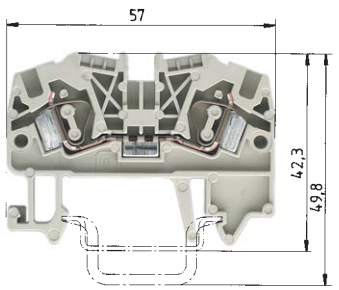


| | WKF 2.5/35 | | | WKF 4/35 | | |
|---|---|---|---|---|---|---|
| | fine stranded | solid | V | fine stranded | solid | V |
| EN 60 947-7-1/DIN VDE 0611 T1 | 0.13 – 2.5 mm² | 0.13 – 4 mm² | 800 V/8 kV/3 | 0.13 – 4 mm² | 0.13 – 6 mm² | 800 V/8 kV/3 |
| UL ratings field/factory wiring | No. 22-12 AWG | | 600 V | No. 22-10 AWG | | 600 V |
| CSA ratings | No. 24-12 AWG | | 600 V | No. 22-10 AWG | | 600 V |
| Width Wire strip length | 5 mm | | 11 mm | 6 mm | | 11 mm |
| Approvals | SEV-EEX RINA LR LCIE BV * ** | | | SEV-EEX RINA LR LCIE BV * ** | | |

| | | Type | Part no. | Std. pack | Type | Part no. | Std. pack |
|---|---|---|---|---|---|---|---|
| **Feed-through block** | Color: gray | WKF 2,5/35 | 56.703.0053.0 | 100 | WKF 4/35 | 56.704.0053.0 | 100 |
| **Feed-through block** | Color: blue | WKF 2,5/35 BLAU | 56.703.0053.6 | 100 | WKF 4/35 BLAU | 56.704.0053.6 | 100 |
| | | | | | | | |
| **Accessories** | | | | | | | |
| 1. Mounting rail 35, 7.5 mm high | L = 2 m | 35x27x7,5 EN 60715 | 98.300.0000.0 | 1 | 35x27x7,5 EN 60715 | 98.300.0000.0 | 1 |
| Mounting rail 35, 15 mm high | L = 2 m | 35x24x15 EN 60715 | 98.360.0000.0 | 1 | 35x24x15 EN 60715 | 98.360.0000.0 | 1 |
| 2. End clamp TS 35, with screw | 8 mm wide | 9708/2 S35 | Z5.522.8553.0 | 100 | 9708/2 S35 | Z5.522.8553.0 | 100 |
| End clamp TS 35, without screw | 8 mm wide | WEF 1/35 | Z5.523.9353.0 | 100 | WEF 1/35 | Z5.523.9353.0 | 100 |
| 3. End plate | Color: gray | APF 2,5 – 4 | 07.312.2153.0 | 10 | APF 2,5 – 4 | 07.312.2153.0 | 10 |
| | Color: blue | APF 2,5 – 4 BLAU | 07.312.2153.6 | 10 | APF 2,5 – 4 BLAU | 07.312.2153.6 | 10 |
| 4. Partition plate | Color: gray | TWF 2,5 – 4 | 07.312.2253.0 | 10 | TWF 2,5 – 4 | 07.312.2253.0 | 10 |
| | Color: blue | TWF 2,5 – 4 BLAU | 07.312.2253.6 | 10 | TWF 2,5 – 4 BLAU | 07.312.2253.6 | 10 |
| 5. Cross connector | 2pole | IVB WKF 2,5 – 2 | Z7.280.6227.0 | 10 | IVB WKF 4 – 2 | Z7.261.1227.0 | 10 |
| insulated (jumper bar) | 3pole | IVB WKF 2,5 – 3 | Z7.280.6327.0 | 10 | IVB WKF 4 – 3 | Z7.261.1327.0 | 10 |
| | 4pole | IVB WKF 2,5 – 4 | Z7.280.6427.0 | 10 | IVB WKF 4 – 4 | Z7.261.1427.0 | 10 |
| | 5pole | IVB WKF 2,5 – 5 | Z7.280.6527.0 | 10 | IVB WKF 4 – 5 | Z7.261.1527.0 | 10 |
| | 6pole | IVB WKF 2,5 – 6 | Z7.280.6627.0 | 10 | IVB WKF 4 – 6 | Z7.261.1627.0 | 10 |
| | 7pole | IVB WKF 2,5 – 7 | Z7.280.6727.0 | 20 | IVB WKF 4 – 7 | Z7.261.1727.0 | 20 |
| | 8pole | IVB WKF 2,5 – 8 | Z7.280.6827.0 | 20 | IVB WKF 4 – 8 | Z7.261.1827.0 | 20 |
| | 9pole | IVB WKF 2,5 – 9 | Z7.280.6927.0 | 20 | IVB WKF 4 – 9 | Z7.261.1927.0 | 20 |
| | 10pole | IVB WKF 2,5 – 10 | Z7.280.7027.0 | 20 | IVB WKF 4 – 10 | Z7.261.2027.0 | 20 |
| 6. Wire entry guide | 0.13 – 0.2 mm² | LEL 2,5/1 WEISS | 05.561.6553.0 | 100 | LEL 4/1 WEISS | 05.561.8553.0 | 100 |
| | 0.25 – 0.5 mm² | LEL 2,5/2 GRAU | 05.561.6653.0 | 100 | LEL 4/2 GRAU | 05.561.8653.0 | 100 |
| | 0.75 – 1.0 mm² | LEL 2,5/3 SCHWARZ | 05.561.6753.0 | 100 | LEL 4/3 SCHWARZ | 05.561.8753.0 | 100 |
| 7. Cover with warning symbol over 4 blocks | | ADF 2,5/4 GELB | 04.343.6053.8 | 10 | ADF 4/4 GELB | 04.343.6153.8 | 10 |
| 8. Screwdriver, uninsulated (jumper bar) | | DIN 5264 B 0,6x3,5 | 06.502.4000.0 | 5 | DIN 5264 B 0,6x3,5 | 06.502.4000.0 | 5 |
| 9. Test plug with spring connection | | PSWKC/F | Z1.299.9753.0 | | PSWKC/F | Z1.299.9753.0 | |
| End plate / spacer | | ZP/APPS | 07.312.6053.0 | | ZP/APPS | 07.312.6053.0 | |
| Blank module for staggered testing | | | 01.299.9753.0 | | | 01.299.9753.0 | |
| | | | | | | | |
| | | | | | | | |
| *) End plate required for each test plug to achieve | | | | | | | |
| 6 mm pitch | | * CL I, ZN1, AExe II | | | * CL I, ZN1, AExe II | | |
| Marking accessories see page 48/49 and page 90/91 | | **CL I, ZN1, Exe II | | | **CL I, ZN1, Exe II | | |

# fasis

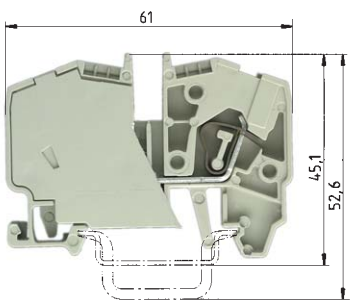


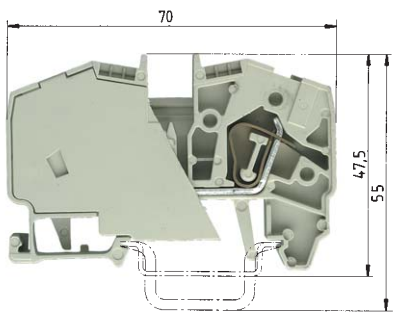


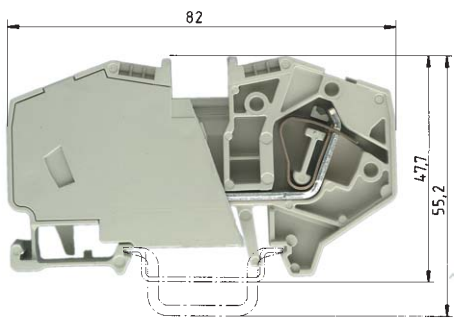


## WKF 6/35

| fine stranded | solid | V | A |
|---|---|---|---|
| 0.5 – 6 mm² | 0.5 – 6 mm² | 800 V/8 kV/3 | 41 |
| No. 20-8 AWG | | 600 V | 40 |
| No. 20-8 AWG | | 600 V | 47 |
| 8 mm | | | 12 mm |

SEV UL * CSA **

## WKF 10/35

| fine stranded | solid | V | A |
|---|---|---|---|
| 2.5 – 10 mm² | 2.5 – 10 mm² | 800 V/8 kV/3 | 57 |
| No. 14-6 AWG | | 600 V | 55 |
| No. 14-6 AWG | | 600 V | 65 |
| 10 mm | | | 13 mm |

SEV LR UL * CSA **

## WKF 16/35

| fine stranded | stranded | V | A |
|---|---|---|---|
| 4 – 16 mm² | 4 – 16 mm² | 800 V/8 kV/3 | 76 |
| No. 12-4 AWG | | 600 V | 75 |
| No. 12-4 AWG | | 600 V | 78 |
| 12 mm | | | 15 mm |

SEV UL * CSA **

| Type | Part no. | Std. pack |
|---|---|---|
| WKF 6/35 | 56.706.0053.0 | 100 |
| WKF 6/35 BLAU | 56.706.0053.6 | 100 |
| 35x27x7,5 EN 60715 | 98.300.0000.0 | 1 |
| 35x24x15 EN 60715 | 98.360.0000.0 | 1 |
| 9708/2 S35 | Z5.522.8553.0 | 100 |
| WEF 1/35 | Z5.523.9353.0 | 100 |
| IVB WKF 6 – 2 | Z7.282.4227.0 | 10 |
| ADF 6/4 GELB | 04.343.6253.8 | 10 |
| DIN 5264 B 0,8x4 | 06.502.4100.0 | 5 |
| PSWKC/F | Z1.299.9753.0 | |
| ZP/APPS | 07.312.6053.0 | |
| | 01.299.9753.0 | |

* CL I, ZN1, AExe II
**CL I, ZN1, Exe II

| Type | Part no. | Std. pack |
|---|---|---|
| WKF 10/35 | 56.710.0053.0 | 50 |
| WKF 10/35 BLAU | 56.710.0053.6 | 50 |
| 35x27x7,5 EN 60715 | 98.300.0000.0 | 1 |
| 35x24x15 EN 60715 | 98.360.0000.0 | 1 |
| 9708/2 S35 | Z5.522.8553.0 | 100 |
| WEF 1/35 | Z5.523.9353.0 | 100 |
| IVB WKF 10 – 2 | Z7.283.8227.0 | 10 |
| ADF 10/4 GELB | 04.343.6453.8 | 10 |
| DIN 5264 B 0,8x4 | 06.502.4100.0 | 5 |
| PSWKC/F | Z1.299.9753.0 | |
| ZP/APPS | 07.312.6053.0 | |
| | 01.299.9753.0 | |

* CL I, ZN1, AExe II
**CL I, ZN1, Exe II

| Type | Part no. | Std. pack |
|---|---|---|
| WKF 16/35 | 56.716.0053.0 | 50 |
| WKF 16/35 BLAU | 56.716.0053.6 | 50 |
| 35x27x7,5 EN 60715 | 98.300.0000.0 | 1 |
| 35x24x15 EN 60715 | 98.360.0000.0 | 1 |
| 9708/2 S35 | Z5.522.8553.0 | 100 |
| WEF 1/35 | Z5.523.9353.0 | 100 |
| IVB WKF 16 – 2 | Z7.284.4227.0 | 10 |
| ADF 16/4 GELB | 04.343.6653.8 | 10 |
| DIN 5264 B 1x5,5 | 06.502.4200.0 | 5 |
| PSWKC/F | Z1.299.9753.0 | |
| ZP/APPS | 07.312.6053.0 | |
| | 01.299.9753.0 | |

* CL I, ZN1, AExe II
**CL I, ZN1, Exe II

# Ground blocks
# with spring clamp connection, type *WKF*

fasis

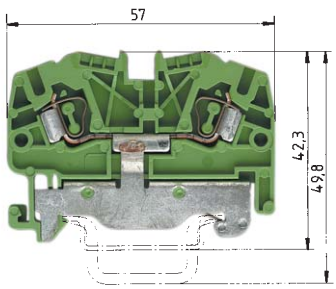


Current carrying capabilities of the mounting rails see catalogue section ***facts*** & DATA

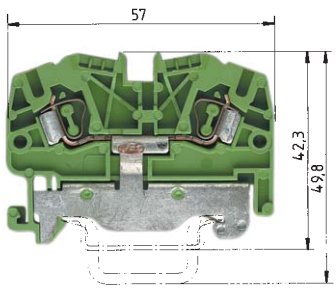


Current carrying capabilities of the mounting rails see catalogue section ***facts*** & DATA

| | | WKF 2.5 SL/35 | | | | WKF 4 SL/35 | | | |
|---|---|---|---|---|---|---|---|---|---|
| | | fine stranded | solid | V | A | fine stranded | solid | V | A |
| EN 60 947-7-2/DIN VDE 0611 T3 | | 0.13 – 2.5 mm² | 0.13 – 4 mm² | 800 V/8 kV/3 | 24 | 0.13 – 4 mm² | 0.13 – 6 mm² | 800 V/8 kV/3 | 32 |
| UL ratings | field/factory wiring | No. 22-12 AWG | | 600 V | | No. 22-10 AWG | | 600 V | |
| CSA ratings | | No. 24-12 AWG | | 600 V | | No. 22-10 AWG | | 600 V | |
| Width | Wire strip length | 5 mm | | | 11 mm | 6 mm | | | 11 mm |
| Approvals | | GL LloyD SEV-EEX SEV OVE D N NV FI KEMA KEUR S RINA LR LCIE BV UL * CSA ** | | | | GL LloyD SEV-EEX SEV OVE D N NV FI KEMA KEUR S RINA LR LCIE BV UL * CSA ** | | | |

| | | Type | Part no. | Std. pack | Type | Part no. | Std. pack |
|---|---|---|---|---|---|---|---|
| **Ground block** | Color: yellow/green | WKF 2,5 SL/35 | 56.703.9053.0 | 100 | WKF 4 SL/35 | 56.704.9053.0 | 100 |
| | | | | | | | |
| **Accessories** | | | | | | | |
| 1. Mounting rail 35, 7.5 mm high | L = 2 m | 35x27x7,5 EN 60715 | 98.300.0000.0 | 1 | 35x27x7,5 EN 60715 | 98.300.0000.0 | 1 |
| Mounting rail 35, 15 mm high | L = 2 m | 35x24x15 EN 60715 | 98.360.0000.0 | 1 | 35x24x15 EN 60715 | 98.360.0000.0 | 1 |
| 2. End clamp TS 35, with screw | 8 mm wide | 9708/2 S35 | Z5.522.8553.0 | 100 | 9708/2 S35 | Z5.522.8553.0 | 100 |
| End clamp TS 35, without screw | 8 mm wide | WEF 1/35 | Z5.523.9353.0 | 100 | WEF 1/35 | Z5.523.9353.0 | 100 |
| 3. End plate | Color: gray | | | | | | |
| | Color: blue | | | | | | |
| | Color: green | APF 2,5 – 4 GRÜN | 07.312.2153.7 | 10 | APF 2,5 – 4 GRÜN | 07.312.2153.7 | 10 |
| 4. Partition plate | Color: gray | | | | | | |
| | Color: blue | | | | | | |
| 5. Cross connector | 2pole | | | | | | |
| insulated (jumper bar) | 3pole | | | | | | |
| | 4pole | | | | | | |
| | 5pole | | | | | | |
| | 6pole | | | | | | |
| | 7pole | | | | | | |
| | 8pole | | | | | | |
| | 9pole | | | | | | |
| | 10pole | | | | | | |
| 6. Wire entry guide | 0.13 – 0.2 mm² | LEL 2,5/1 WEISS | 05.561.6553.0 | 100 | LEL 4/1 WEISS | 05.561.8553.0 | 100 |
| | 0.25 – 0.5 mm² | LEL 2,5/2 GRAU | 05.561.6653.0 | 100 | LEL 4/2 GRAU | 05.561.8653.0 | 100 |
| | 0.75 – 1.0 mm² | LEL 2,5/3 SCHWARZ | 05.561.6753.0 | 100 | LEL 4/3 SCHWARZ | 05.561.8753.0 | 100 |
| 7. Cover with warning symbol over 4 blocks | | | | | | | |
| 8. Screwdriver, uninsulated (jumper bar) | | DIN 5264 B 0,6x3,5 | 06.502.4000.0 | 5 | DIN 5264 B 0,6x3,5 | 06.502.4000.0 | 5 |
| | | | | | | | |
| | | | | | | | |
| | | | | | | | |
| | | | | | | | |
| | | | | | | | |
| | | * CL I, ZN1, AExe II | | | * CL I, ZN1, AExe II | | |
| | | **CL I, ZN1, Exe II | | | **CL I, ZN1, Exe II | | |
| Marking accessories see page 48/49 and page 90/91 | | Please see note on page 17! | | | Please see note on page 17! | | |

# fasis

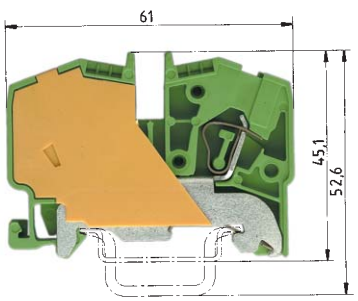


Current carrying capabilities of the mounting rails see catalogue section ***facts*** & DATA

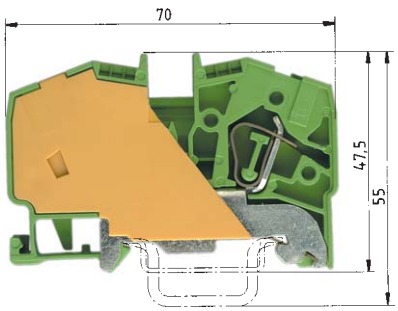


Current carrying capabilities of the mounting rails see catalogue section ***facts*** & DATA

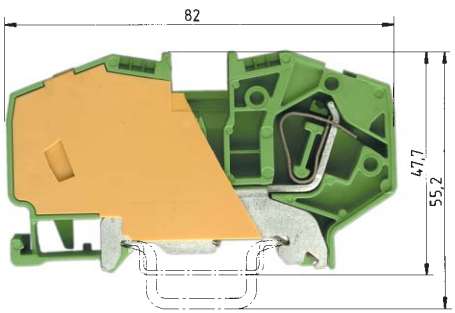


Current carrying capabilities of the mounting rails see catalogue section ***facts*** & DATA

## WKF 6 SL/35

| fine stranded | solid | V | A |
|---|---|---|---|
| 0.5 – 6 mm² | 0.5 – 6 mm² | 800 V/8 kV/3 | 41 |
| No. 20-8 AWG | | 600 V | |
| No. 20-8 AWG | | 600 V | |
| 8 mm | | | 12 mm |

SEV UL * CSA **

## WKF 10 SL/35

| fine stranded | solid | V | A |
|---|---|---|---|
| 2.5 – 10 mm² | 2.5 – 10 mm² | 800 V/8 kV/3 | 57 |
| No. 14-6 AWG | | 600 V | |
| No. 14-6 AWG | | 600 V | |
| 10 mm | | | 13 mm |

SEV UL * CSA **

## WKF 16 SL/35

| fine stranded | stranded | V | A |
|---|---|---|---|
| 4 – 16 mm² | 4 – 16 mm² | 800 V/8 kV/3 | 76 |
| No. 12-4 AWG | | 600 V | |
| No. 12-4 AWG | | 600 V | |
| 12 mm | | | 15 mm |

SEV UL * CSA **

| Type | Part no. | Std. pack |
|---|---|---|
| WKF 6 SL/35 | 56.706.9053.0 | 100 |
| 35x27x7,5 EN 60715 | 98.300.0000.0 | 1 |
| 35x24x15 EN 60715 | 98.360.0000.0 | 1 |
| 9708/2 S35 | Z5.522.8553.0 | 100 |
| WEF 1/35 | Z5.523.9353.0 | 100 |
| DIN 5264 B 0,8x4 | 06.502.4100.0 | 5 |

* CL I, ZN1, AExe II
**CL I, ZN1, Exe II
Please see note on page 17!

| Type | Part no. | Std. pack |
|---|---|---|
| WKF 10 SL/35 | 56.710.9053.0 | 50 |
| 35x27x7,5 EN 60715 | 98.300.0000.0 | 1 |
| 35x24x15 EN 60715 | 98.360.0000.0 | 1 |
| 9708/2 S35 | Z5.522.8553.0 | 100 |
| WEF 1/35 | Z5.523.9353.0 | 100 |
| DIN 5264 B 0,8x4 | 06.502.4100.0 | 5 |

* CL I, ZN1, AExe II
**CL I, ZN1, Exe II
Please see note on page 17!

| Type | Part no. | Std. pack |
|---|---|---|
| WKF 16 SL/35 | 56.716.9053.0 | 50 |
| 35x27x7,5 EN 60715 | 98.300.0000.0 | 1 |
| 35x24x15 EN 60715 | 98.360.0000.0 | 1 |
| 9708/2 S35 | Z5.522.8553.0 | 100 |
| WEF 1/35 | Z5.523.9353.0 | 100 |
| DIN 5264 B 1x5,5 | 06.502.4200.0 | 5 |

* CL I, ZN1, AExe II
**CL I, ZN1, Exe II
Please see note on page 17!

# Neutral disconnect blocks with spring clamp connection, type *WKF*

**fasis**

Combination with
Feed-through block WKF 4/35
ground block WKF 4 SL/35

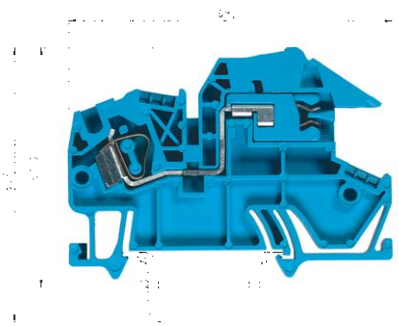

## WKF 4 NT/35

| | | fine stranded | solid | V | A |
|---|---|---|---|---|---|
| EN 60 947-7-1; 1991/DIN VDE 0611 T1/08.92 | | 0.13 – 4 mm² | 0.13 – 6 mm² | 400 V/6 kV/3 | 30 |
| UL ratings | field/factory wiring | | | | |
| CSA ratings | | No. 22-10 AWG | | 600 V | 25 |
| Width | Wire strip length | 6 mm | | | 11 mm |
| Approvals | | | | | |

| | | Type | Part no. | Std. pack |
|---|---|---|---|---|
| **Feed-through block** | Color: gray | | | |
| **Feed-through block** | Color: blue | | | |
| **Neutralleiter-Trennklemme** | Color: blue | WKF 4 NT/35 | 56.704.8153.0 | 100 |
| **Ground block** | Color: green/yellow | | | |
| | | | | |
| **Accessories** | | | | |
| 1. Mounting rail 35, 7.5 mm high | L = 2 m | 35x27x7,5 EN 60715 | 98.300.0000.0 | 1 |
| Mounting rail 35, 15 mm high | L = 2 m | 35x24x15 EN 60715 | 98.360.0000.0 | 1 |
| 2. End clamp TS 35, with screw | 8 mm wide | 9708/2 S35 | Z5.522.8553.0 | 100 |
| End clamp TS 35, without screw | 8 mm wide | WEF 1/35 | Z5.523.9353.0 | 100 |
| 3. End plate | Color: gray | | | |
| | Color: blue | APF 4 NT | 07.312.6053.0 | 10 |
| 4. Partition plate | | | | |
| 5. Cross connector | 2pole | IVB WKF 4 – 2 | Z7.261.1227.0 | 10 |
| insulated (jumper bar) | 3pole | IVB WKF 4 – 3 | Z7.261.1327.0 | 10 |
| | 4pole | IVB WKF 4 – 4 | Z7.261.1427.0 | 10 |
| | 5pole | IVB WKF 4 – 5 | Z7.261.1527.0 | 10 |
| | 6pole | IVB WKF 4 – 6 | Z7.261.1627.0 | 10 |
| | 7pole | IVB WKF 4 – 7 | Z7.261.1727.0 | 20 |
| | 8pole | IVB WKF 4 – 8 | Z7.261.1827.0 | 20 |
| | 9pole | IVB WKF 4 – 9 | Z7.261.1927.0 | 20 |
| | 10pole | IVB WKF 4 – 10 | Z7.261.2027.0 | 20 |
| 6. Wire entry guide | 0.13 – 0.2 mm² | LEL 4/1 WEISS | 05.561.8553.0 | 100 |
| | 0.25 – 0.5 mm² | LEL 4/2 GRAU | 05.561.8653.0 | 100 |
| | 0.75 – 1.0 mm² | LEL 4/3 SCHWARZ | 05.561.8753.0 | 100 |
| 7. Cover with warning symbol over 4 blocks | | ADF 4/4 GELB | 04.343.6153.8 | 10 |
| 8. Bus bar, E-Cu 10 x 3 mm, tin-plated | L = 1 m | 9813 M SN | 98.290.1000.0 | 1 |
| 9. Connector clamp for bus bar | 8.5 mm wide | WAK 16/2 BLAU | 30.494.3021.6 | 100 |
| | 17 mm wide | WAK 35/2 | 30.494.4121.0 | 50 |
| 10. Bus bar support | 8 mm wide | WKIF SH/E/35 | Z1.108.8453.0 | 10 |
| 11. Screwdriver uninsulated (jumper bar) | | DIN 5264 B 0,6x3,5 | 06.502.4000.0 | 5 |
| | | | | |
| | | | | |
| Marking accessories see page 48/49 and page 90/91 | | | | |

# Supply blocks for junction box with spring clamp connection, type *WKIF*

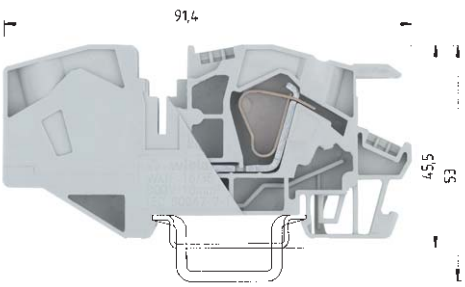


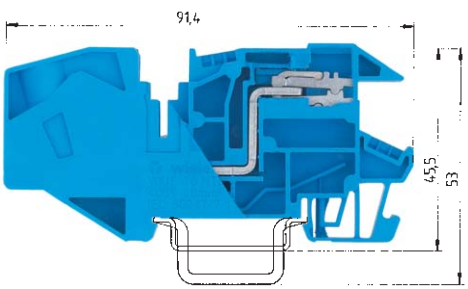


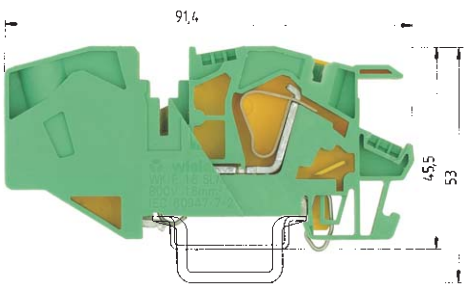


## WKIF 16/35

| fine stranded | stranded | V | A |
|---|---|---|---|
| 4 – 16 mm² | 4 – 16 mm² | 800 V/8 kV/3 | 76 |

12 mm 16 mm

## WKIF 16 NT/35

| fine stranded | stranded | V | A |
|---|---|---|---|
| 4 – 16 mm² | 4 – 16 mm² | 400 V/6 kV/3 | 68 |

12 mm 16 mm

## WKIF 16 SL/35

| fine stranded | stranded | V | A |
|---|---|---|---|
| 4 – 16 mm² | 4 – 16 mm² | 800 V/8 kV/3 | 76 |

12 mm 16 mm

| Type | Part no. | Std. pack |
|---|---|---|
| WKIF 16/35 | 56.716.1153.0 | 50 |
| WKIF 16/35 BLAU | 56.716.1153.6 | 50 |
| 35x27x7,5 EN 60715 | 98.300.0000.0 | 1 |
| 35x24x15 EN 60715 | 98.360.0000.0 | 1 |
| 9708/2 S35 | Z5.522.8553.0 | 100 |
| IVB WKIF 16 – 2 | Z7.284.6227.0 | 10 |
| 9813 M SN | 98.290.1000.0 | 1 |
| WAK 16/2 BLAU | 30.494.3021.6 | 100 |
| WAK 35/2 | 30.494.4121.0 | 50 |
| WKIF SH/E/35 | Z1.108.8453.0 | 10 |
| DIN 5264 B 1x5 | 06.502.4200.0 | 5 |

| Type | Part no. | Std. pack |
|---|---|---|
| WKIF 16 NT/35 | 56.716.8153.0 | 50 |
| 35x27x7,5 EN 60715 | 98.300.0000.0 | 1 |
| 35x24x15 EN 60715 | 98.360.0000.0 | 1 |
| 9708/2 S35 | Z5.522.8553.0 | 100 |
| WEF 1/35 | Z5.523.9353.0 | 100 |
| IVB WKIF 16 – 2 | Z7.284.6227.0 | 10 |
| 9813 M SN | 98.290.1000.0 | 1 |
| WAK 16/2 BLAU | 30.494.3021.6 | 100 |
| WAK 35/2 | 30.494.4121.0 | 50 |
| WKIF SH/E/35 | Z1.108.8453.0 | 10 |
| DIN 5264 B 1x5 | 06.502.4200.0 | 5 |

| Type | Part no. | Std. pack |
|---|---|---|
| WKIF 16 SL/35 | 56.716.9153.0 | 50 |
| 35x27x7,5 EN 60715 | 98.300.0000.0 | 1 |
| 35x24x15 EN 60715 | 98.360.0000.0 | 1 |
| 9708/2 S35 | Z5.522.8553.0 | 100 |
| IVB WKIF 16 – 2 | Z7.284.6227.0 | 10 |
| 9813 M SN | 98.290.1000.0 | 1 |
| WAK 16/2 BLAU | 30.494.3021.6 | 100 |
| WAK 35/2 | 30.494.4121.0 | 50 |
| WKIF SH/E/35 | Z1.108.8453.0 | 10 |
| DIN 5264 B 1x5 | 06.502.4200.0 | 5 |

# Duo-feed-through blocks
# with spring clamp connection, type *WKF*

fasis

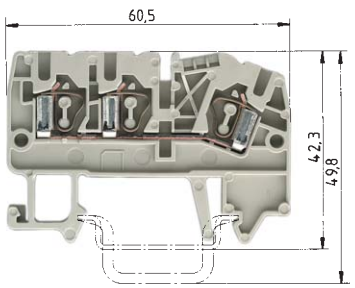


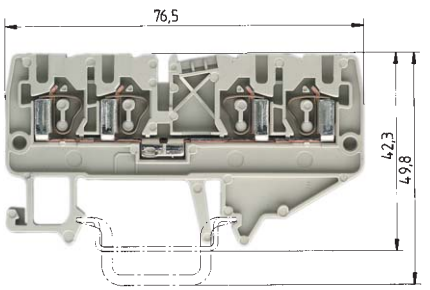


| | | WKF 2.5 D1/2/35 | | | WKF 2.5 D2/2/35 | | |
|---|---|---|---|---|---|---|---|
| | | fine stranded | solid | V | fine stranded | solid | V |
| EN 60 947-7-1/DIN VDE 0611 T1 | | 0.13 – 2.5 mm² | 0.5 – 4 mm² | 800 V/8 kV/3 | 0.13 – 2.5 mm² | 0.5 – 4 mm² | 800 V/8 kV/3 |
| UL ratings | field/factory wiring | No. 22-12 AWG | | 600 V | No. 22-12 AWG | | 600 V |
| CSA ratings | | No. 24-12 AWG | | 600 V | No. 24-12 AWG | | 600 V |
| Width | Wire strip length | 5 mm | | 11 mm | 5 mm | | 11 mm |
| Approvals | | SEV-EEX RINA LR LCIE BV * ** | | | SEV-EEX RINA LR LCIE BV * ** | | |

| | | Type | Part no. | Std. pack | Type | Part no. | Std. pack |
|---|---|---|---|---|---|---|---|
| **Duo feed-through block 1/2** | Color: gray | WKF 2,5/D1/2/35 | 56.703.5053.0 | 100 | | | |
| | Color: blue | WKF 2,5/D1/2/35 BLAU | 56.703.5053.6 | 100 | | | |
| **Duo feed-through block 2/2** | Color: gray | | | | WKF 2,5/D2/2/35 | 56.703.5153.0 | 100 |
| | Color: blue | | | | WKF 2,5/D2/2/35 BLAU | 56.703.5153.6 | 100 |
| **Double feed-through block** | Color: black | | | | | | |
| | | | | | | | |
| | | | | | | | |
| **Accessories** | | | | | | | |
| 1. Mounting rail 35, 7.5 high | L = 2 m | 35x27x7,5 EN 60715 | 98.300.0000.0 | 1 | 35x27x7,5 EN 60715 | 98.300.0000.0 | 1 |
| Mounting rail 35, 15 high | L = 2 m | 35x24x15 EN 60715 | 98.360.0000.0 | 1 | 35x24x15 EN 60715 | 98.360.0000.0 | 1 |
| 2. End clamp TS 35, with screw | 8 mm wide | 9708/2 S35 | Z5.522.8553.0 | 100 | 9708/2 S35 | Z5.522.8553.0 | 100 |
| End clamp TS 35, without screw | 8 mm wide | WEF 1/35 | Z5.523.9353.0 | 100 | WEF 1/35 | Z5.523.9353.0 | 100 |
| 3. End plate | Color: gray | APF 2,5 /D1/2 | 07.312.2353.0 | 10 | APF 2,5 /D2/2 | 07.312.2553.0 | 10 |
| | Color: blue | APF 2,5/D1/2 BLAU | 07.312.2353.6 | 10 | APF 2,5/D2/2 BLAU | 07.312.2553.6 | 10 |
| 4. Partition plate | Color: gray | TWF 2,5/D1/2 | 07.312.2453.0 | 10 | TWF 2,5/D2/2 | 07.312.2653.0 | 10 |
| | Color: blue | TWF 2,5/D1/2 BLAU | 07.312.2453.6 | 10 | TWF 2,5/D2/2 BLAU | 07.312.2653.6 | 10 |
| 5. Cross connector | 2pole | IVB WKF 2,5 – 2 | Z7.280.6227.0 | 10 | IVB WKF 2,5 – 2 | Z7.280.6227.0 | 10 |
| insulated (jumper bar) | 3pole | IVB WKF 2,5 – 3 | Z7.280.6327.0 | 10 | IVB WKF 2,5 – 3 | Z7.280.6327.0 | 10 |
| | 4pole | IVB WKF 2,5 – 4 | Z7.280.6427.0 | 10 | IVB WKF 2,5 – 4 | Z7.280.6427.0 | 10 |
| | 5pole | IVB WKF 2,5 – 5 | Z7.280.6527.0 | 10 | IVB WKF 2,5 – 5 | Z7.280.6527.0 | 10 |
| | 6pole | IVB WKF 2,5 – 6 | Z7.280.6627.0 | 10 | IVB WKF 2,5 – 6 | Z7.280.6627.0 | 10 |
| | 7pole | IVB WKF 2,5 – 7 | Z7.280.6727.0 | 20 | IVB WKF 2,5 – 7 | Z7.280.6727.0 | 20 |
| | 8pole | IVB WKF 2,5 – 8 | Z7.280.6827.0 | 20 | IVB WKF 2,5 – 8 | Z7.280.6827.0 | 20 |
| | 9pole | IVB WKF 2,5 – 9 | Z7.280.6927.0 | 20 | IVB WKF 2,5 – 9 | Z7.280.6927.0 | 20 |
| | 10pole | IVB WKF 2,5 – 10 | Z7.280.7027.0 | 20 | IVB WKF 2,5 – 10 | Z7.280.7027.0 | 20 |
| 6. Wire entry guide | 0.13 – 0.2 mm² | LEL 2,5/1 WEISS | 05.561.6553.0 | 100 | LEL 2,5/1 WEISS | 05.561.6553.0 | 100 |
| | 0.25 – 0.5 mm² | LEL 2,5/2 GRAU | 05.561.6653.0 | 100 | LEL 2,5/2 GRAU | 05.561.6653.0 | 100 |
| | 0.75 – 1.0 mm² | LEL 2,5/3 SCHWARZ | 05.561.6753.0 | 100 | LEL 2,5/3 SCHWARZ | 05.561.6753.0 | 100 |
| 7. Cover with warning symbol over 4 blocks | | ADF 2,5/4 GELB | 04.343.6053.8 | 10 | ADF 2,5/4 GELB | 04.343.6053.8 | 10 |
| 8. Screwdriver, uninsulated (jumper bar) | | DIN 5264 B 0,6x3,5 | 06.502.4000.0 | 5 | DIN 5264 B 0,6x3,5 | 06.502.4000.0 | 5 |
| 9. Test plug with spring connection | | PSWKC/F | Z1.299.9753.0 | | PSWKC/F | Z1.299.9753.0 | |
| End plate / spacer | | ZP/APPS | 07.312.6053.0 | | ZP/APPS | 07.312.6053.0 | |
| Blank module for staggered testing | | | 01.299.9753.0 | | | 01.299.9753.0 | |
| Marking accessories see page 48/49 and page 90/91 | | * CL I, ZN1, AExe II / **CL I, ZN1, Exe II | | | * CL I, ZN1, AExe II / **CL I, ZN1, Exe II | | |

# fasis

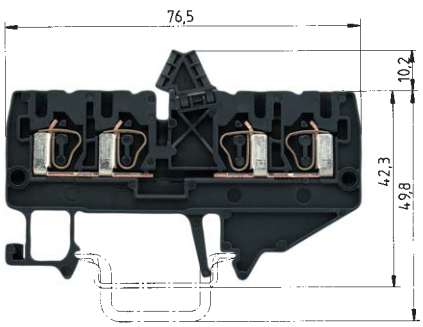


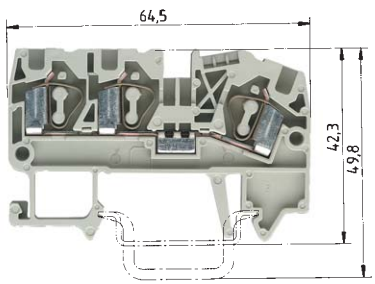


## WKF 2.5 D/D/35

| fine stranded | solid | V | A |
|---|---|---|---|
| 0.13 – 2.5 mm² | 0.5 – 4 mm² | 800 V/8 kV/3 | 24 |
| No. 22-12 AWG | | 600 V | 20/30 |
| No. 24-12 AWG | | 600 V | 25 |
| 5 mm | | | 11 mm |

SEV-EEX RINA LR LCIE BV [1] [2]

## WKF 4 D1/2/35

| fine stranded | solid | V | A |
|---|---|---|---|
| 0.13 – 4 mm² | 0.5 – 6 mm² | 800 V/8 kV/3 | 32 |
| No. 22-10 AWG | | 600 V | 30 |
| No. 22-10 AWG | | 600 V | 35 |
| 6 mm | | | 11 mm |

[1] [2]

| Type | Part no. | Std. pack | Type | Part no. | Std. pack |
|---|---|---|---|---|---|
| | | | WKF 4 D1/2/35 | 56.704.5053.0 | 100 |
| | | | WKF 4 D1/2/35 BLAU | 56.704.5053.6 | 100 |
| | | | | | |
| | | | | | |
| WKF 2,5/D/D/35 | 56.703.5253.0 | 100 | | | |
| | | | | | |
| | | | | | |
| | | | | | |
| 35x27x7,5 EN 60715 | 98.300.0000.0 | 1 | 35x27x7,5 EN 60715 | 98.300.0000.0 | 1 |
| 35x24x15 EN 60715 | 98.360.0000.0 | 1 | 35x24x15 EN 60715 | 98.360.0000.0 | 1 |
| 9708/2 S35 | Z5.522.8553.0 | 100 | 9708/2 S35 | Z5.522.8553.0 | 100 |
| WEF 1/35 | Z5.523.9353.0 | 100 | WEF 1/35 | Z5.523.9353.0 | 100 |
| APF 2,5 /D2/2 | 07.312.2553.0 | 10 | APF 4/D1/2 | 07.312.4853.0 | 10 |
| | | | APF 4/D1/2 BLAU | 07.312.4853.6 | 10 |
| TWF 2,5/D2/2 | 07.312.2653.0 | 10 | TWF 4/D1/2 | 07.312.4953.0 | 10 |
| | | | TWF 4/D1/2 BLAU | 07.312.4953.6 | 10 |
| | | | IVB WKF 4 – 2 | Z7.261.1227.0 | 10 |
| | | | IVB WKF 4 – 3 | Z7.261.1327.0 | 10 |
| | | | IVB WKF 4 – 4 | Z7.261.1427.0 | 10 |
| | | | IVB WKF 4 – 5 | Z7.261.1527.0 | 10 |
| | | | IVB WKF 4 – 6 | Z7.261.1627.0 | 10 |
| | | | IVB WKF 4 – 7 | Z7.261.1727.0 | 20 |
| | | | IVB WKF 4 – 8 | Z7.261.1827.0 | 20 |
| | | | IVB WKF 4 – 9 | Z7.261.1927.0 | 20 |
| | | | IVB WKF 4 – 10 | Z7.261.2027.0 | 20 |
| LEL 2,5/1 WEISS | 05.561.6553.0 | 100 | LEL 4/1 WEISS | 05.561.8553.0 | 100 |
| LEL 2,5/2 GRAU | 05.561.6653.0 | 100 | LEL 4/2 GRAU | 05.561.8653.0 | 100 |
| LEL 2,5/3 SCHWARZ | 05.561.6753.0 | 100 | LEL 4/3 SCHWARZ | 05.561.8753.0 | 100 |
| ADF 2,5/4 GELB | 04.343.6053.8 | 10 | ADF 4/4 GELB | 04.343.6153.8 | 10 |
| DIN 5264 B 0,6x3,5 | 06.502.4000.0 | 5 | DIN 5264 B 0,6x3,5 | 06.502.4000.0 | 5 |
| PSWKC/F | Z1.299.9753.0 | | PSWKC/F | Z1.299.9753.0 | |
| ZP/APPS | 07.312.6053.0 | | ZP/APPS | 07.312.6053.0 | |
| | 01.299.9753.0 | | | 01.299.9753.0 | |
| [1] CL I, ZN1, Exe II, [2] CL I, ZN1, AExe II | | | [1] CL I, ZN1, Exe II, [2] CL I, ZN1, AExe II | | |

# Duo ground blocks with spring clamp connection, type *WKF*

fasis

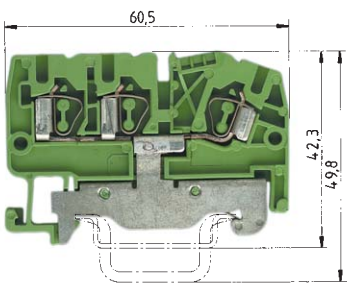


Current carrying capabilities of the mounting rails see catalogue section ***facts*** & DATA

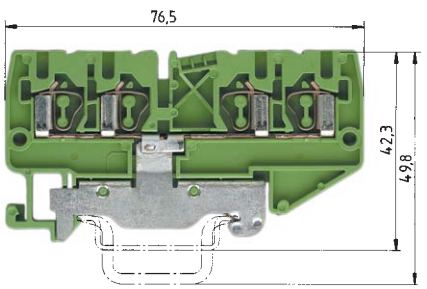


Current carrying capabilities of the mounting rails see catalogue section ***facts*** & DATA

| | WKF 2.5 D1/2/SL/35 | | | | WKF 2.5 D2/2/SL/35 | | | |
|---|---|---|---|---|---|---|---|---|
| | fine stranded | solid | V | A | fine stranded | solid | V | A |
| EN 60 947-7-1/DIN VDE 0611 T1 | 0.13 – 2.5 mm² | 0.5 – 4 mm² | 800 V/8 kV/3 | 24 | 0.13 – 2.5 mm² | 0.5 – 4 mm² | 800 V/8 kV/3 | 24 |
| UL ratings field/factory wiring | No. 22-12 AWG | | 600 V | | No. 22-12 AWG | | 600 V | |
| CSA ratings | No. 24-12 AWG | | 600 V | | No. 24-12 AWG | | 600 V | |
| Width Wire strip length | 5 mm | | | 11 mm | 5 mm | | | 11 mm |
| Approvals | GL LRS SEV-EEX SEV OVE D N NV FI KEMA KEUR S RINA LR LCIE BV UL * CSA ** | | | | GL LRS SEV-EEX SEV OVE D N NV FI KEMA KEUR S RINA LR LCIE BV UL * CSA ** | | | |

| | | Type | Part no. | Std. pack | Type | Part no. | Std. pack |
|---|---|---|---|---|---|---|---|
| **Duo feed-through block 1/2** | Color: yellow/green | WKF 2,5/D1/2/SL/35 | 56.703.9353.0 | 100 | | | |
| **Duo ground block 2/2** | Color: yellow/green | | | | WKF 2,5/D2/2/SL/35 | 56.703.9153.0 | 100 |
| | | | | | | | |
| **Accessories** | | | | | | | |
| 1. Mounting rail 35, 7.5 high | L = 2 m | 35x27x7,5 EN 60715 | 98.300.0000.0 | 1 | 35x27x7,5 EN 60715 | 98.300.0000.0 | 1 |
| Mounting rail 35, 15 high | L = 2 m | 35x24x15 EN 60715 | 98.360.0000.0 | 1 | 35x24x15 EN 60715 | 98.360.0000.0 | 1 |
| 2. End clampTS 35, with screw | 8 mm wide | 9708/2 S35 | Z5.522.8553.0 | 100 | 9708/2 S35 | Z5.522.8553.0 | 100 |
| End clamp TS 35, without screw | 8 mm wide | WEF 1/35 | Z5.523.9353.0 | 100 | WEF 1/35 | Z5.523.9353.0 | 100 |
| 3. End plate | Color: grau | | | | | | |
| | Color: blue | | | | | | |
| | Color: green | APF 2,5 D1/2 GRÜN | 07.312.2353.7 | 10 | APF 2,5 D2/2 GRÜN | 07.312.2553.7 | 10 |
| 4. Partition plate | Color: gray | | | | | | |
| | Color: blue | | | | | | |
| 5. Cross connector | 2pole | | | | | | |
| Insulated (jumper bar) | 3pole | | | | | | |
| | 4pole | | | | | | |
| | 5pole | | | | | | |
| | 6pole | | | | | | |
| | 7pole | | | | | | |
| | 8pole | | | | | | |
| | 9pole | | | | | | |
| | 10pole | | | | | | |
| 6. Wire entry guide | 0.13 – 0.2 mm² | LEL 2,5/1 WEISS | 05.561.6553.0 | 100 | LEL 2,5/1 WEISS | 05.561.6553.0 | 100 |
| | 0.25 – 0.5 mm² | LEL 2,5/2 GRAU | 05.561.6653.0 | 100 | LEL 2,5/2 GRAU | 05.561.6653.0 | 100 |
| | 0.75 – 1.0 mm² | LEL 2,5/3 SCHWARZ | 05.561.6753.0 | 100 | LEL 2,5/3 SCHWARZ | 05.561.6753.0 | 100 |
| 7. Cover with warning symbol over 4 blocks | | ADF 2,5/4 GELB | 04.343.6053.8 | 10 | ADF 2,5/4 GELB | 04.343.6053.8 | 10 |
| 8. Screwdriver, uninsulated (jumper bar) | | DIN 5264 B 0,6x3,5 | 06.502.4000.0 | 5 | DIN 5264 B 0,6x3,5 | 06.502.4000.0 | 5 |
| | | | | | | | |
| | | | | | | | |
| | | | | | | | |
| | | | | | | | |
| | | | | | | | |
| | | * CL I, ZN1, AExe II / **CL I, ZN1, Exe II | | | * CL I, ZN1, AExe II / **CL I, ZN1, Exe II | | |
| Marking accessories see page 48/49 and page 90/91 | | Please see note on page 17! | | | Please see note on page 17! | | |

# fasis

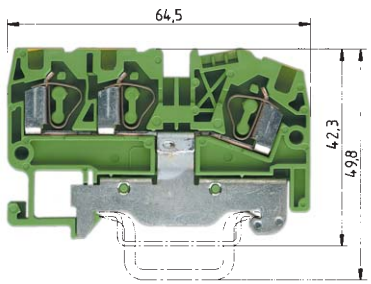


Current carrying capabilities of the mounting rails see catalogue section ***facts*** & DATA

## WKF 4 D1/2/SL/35

| fine stranded | solid | V | A |
|---|---|---|---|
| 0.13 – 4 mm² | 0.5 – 6 mm² | 800 V/8 kV/3 | 32 |
| No. 22-10 AWG | | 600 V | |
| No. 22-10 AWG | | 600 V | |
| 6 mm | | | 11 mm |

1) 2)

| Type | Part no. | Std. pack |
|---|---|---|
| WKF 4 D1/2/SL/35 | 56.704.9353.0 | 100 |
| | | |
| | | |
| | | |
| 35x27x7,5 EN 60715 | 98.300.0000.0 | 1 |
| 35x24x15 EN 60715 | 98.360.0000.0 | 1 |
| 9708/2 S35 | Z5.522.8553.0 | 100 |
| WEF 1/35 | Z5.523.9353.0 | 100 |
| | | |
| | | |
| APF 4 D1/2 GRÜN | 07.312.4853.7 | 10 |
| | | |
| | | |
| | | |
| | | |
| | | |
| | | |
| | | |
| | | |
| | | |
| | | |
| | | |
| LEL 4/1 WEISS | 05.561.8553.0 | 100 |
| LEL 4/2 GRAU | 05.561.8653.0 | 100 |
| LEL 4/3 SCHWARZ | 05.561.8753.0 | 100 |
| ADF 2,5/4 GELB | 04.343.6053.8 | 10 |
| DIN 5264 B 0,6x3,5 | 06.502.4000.0 | 5 |
| | | |
| | | |
| | | |
| | | |
| | | |

1) CL I, ZN1, Exe II, 2) CL I, ZN1, AExe II

Please see note on page 17!

# Double tier terminals with spring clamp connection, type *WKF*

fasis

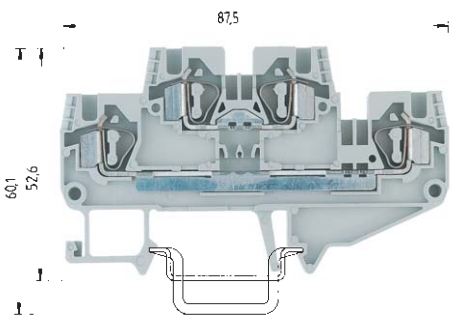


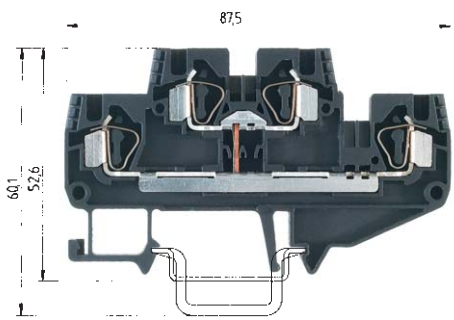


| | | WKF 4 E/35 | | | | WKF 4 E/VB/35 | | | |
|---|---|---|---|---|---|---|---|---|---|
| | | fine stranded | solid | V | A | fine stranded | solid | V | A |
| EN 60 947-7-1 | | 0.13 - 4 mm² | 0.13 - 6 mm² | 800 V/8 kV/3 | 32 | 0.13 - 4 mm² | 0,13 - 6 mm² | 800 V/8 kV/3 | 32 |
| UL ratings | field/factory wiring | | | | | | | | |
| CSA ratings | | | | | | | | | |
| Width | Wire strip length | 6 mm | | | 11 mm | 6 mm | | | 11 mm |
| Approvals | | pending | | | | pending | | | |

| | | Type | Part no. | Std. pack | Type | Part no. | Std. pack |
|---|---|---|---|---|---|---|---|
| **Double Tier** | Color: gray | WKF 4 E/35 | 56.704.7053.0 | 100 | | | |
| **Double Tier-Branch circuit** | Color: black | | | | WKF 4 E/VB/35 | 56.704.6953.1 | 100 |
| **Double Tier-Ground** | Color: green/yellow | | | | | | |
| **Function Terminal** | Color: red | | | | | | |
| **Function Terminal** | Color: orange | | | | | | |
| | | | | | | | |
| **Accessories** | | | | | | | |
| 1. Mounting rail 35, 7.5 mm high, solid | L = 2 m | 35x27x7,5 EN 60715 | 98.300.0000.0 | 1 | 35x27x7,5 EN 60715 | 98.300.0000.0 | 1 |
| Mounting rail 35, 15 mm high, solid | L = 2 m | 35x24x15 EN 60715 | 98.360.0000.0 | 1 | 35x24x15 EN 60715 | 98.360.0000.0 | 1 |
| 2. End clamp TS 35, screwmount | 8 mm wide | 9708/2 S35 | Z5.522.8553.0 | 100 | 9708/2 S35 | Z5.522.8553.0 | 100 |
| End clamp TS 35, screwless | 8 mm wide | WEF 1/35 | Z5.523.9353.0 | 100 | WEF 1/35 | Z5.523.9353.0 | 100 |
| 3. End plate | 1.5 mm wide | Color: gray | APF 4 E...07.312.5753.0 | 10 | APF 4 E... | 07.312.5753.0 | 10 |
| | 1.5 mm wide | Color: blue | | | | | |
| | 1.5 mm wide | Color: green | | | | | |
| 4. Partition plate | 1.5 mm wide | Color: gray | TWF 4 E...07.312.5853.0 | 10 | TWF 4 E... | 07.312.5853.0 | 10 |
| | 1.5 mm wide | Color: blue | | | | | |
| 5. Cross connector | 2pole | IVB WKF 4 – 2 | Z7.261.1227.0 | 10 | IVB WKF 4 – 2 | Z7.261.1227.0 | 10 |
| insulated (jumper bar) | 3pole | IVB WKF 4 – 3 | Z7.261.1327.0 | 10 | IVB WKF 4 – 3 | Z7.261.1327.0 | 10 |
| | 4pole | IVB WKF 4 – 4 | Z7.261.1427.0 | 10 | IVB WKF 4 – 4 | Z7.261.1427.0 | 10 |
| | 5pole | IVB WKF 4 – 5 | Z7.261.1527.0 | 10 | IVB WKF 4 – 5 | Z7.261.1527.0 | 10 |
| | 6pole | IVB WKF 4 – 6 | Z7.261.1627.0 | 10 | IVB WKF 4 – 6 | Z7.261.1627.0 | 10 |
| | 7pole | IVB WKF 4 – 7 | Z7.261.1727.0 | 20 | IVB WKF 4 – 7 | Z7.261.1727.0 | 20 |
| | 8pole | IVB WKF 4 – 8 | Z7.261.1827.0 | 20 | IVB WKF 4 – 8 | Z7.261.1827.0 | 20 |
| | 9pole | IVB WKF 4 – 9 | Z7.261.1927.0 | 20 | IVB WKF 4 – 9 | Z7.261.1927.0 | 20 |
| | 10pole | IVB WKF 4 – 10 | Z7.261.2027.0 | 20 | IVB WKF 4 – 10 | Z7.261.2027.0 | 20 |
| 6. Vertical Jumper | 1pole | IVB WKF-V*) | Z7.261.1127.0 | | | | |
| 7 Wire entry guide | 0.13 – 0.2 mm² | LEL 4/1 WEISS | 05.561.8553.0 | 100 | LEL 4/1 WEISS | 05.561.8553.0 | 100 |
| | 0.25 – 0.5 mm² | LEL 4/2 GRAU | 05.561.8653.0 | 100 | LEL 4/2 GRAU | 05.561.8653.0 | 100 |
| | 0.75 – 1.0 mm² | LEL 4/3 SCHWARZ | 05.561.8753.0 | 100 | LEL 4/3 SCHWARZ | 05.561.8753.0 | 100 |
| 8. Cover with warning symbol for 4 terminals | | ADF 4/4 GELB | 04.343.6153.8 | 10 | ADF 4/4 GELB | 04.343.6153.8 | 10 |
| 9. Screwdriver | | DIN 5264 B 0,6x3,5 | 06.502.4000.0 | 5 | DIN 5264 B 0,6x3,5 | 06.502.4000.0 | 5 |
| Screwdriver, MINI | | DIN 5264 B 0,6x3,5 M | 06.502.5000.0 | 10 | DIN 5264 B 0,6x3,5 M | 06.502.5000.0 | 10 |
| | | | | | | | |
| Marking accessories see page 48/49 and page 90/91 | | | | | | | |

# fasis

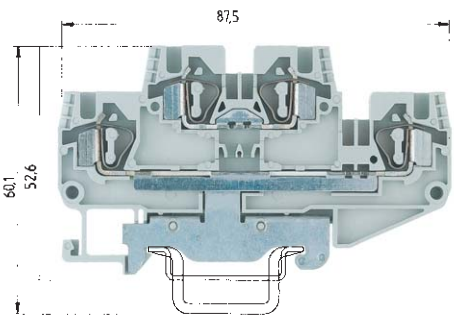


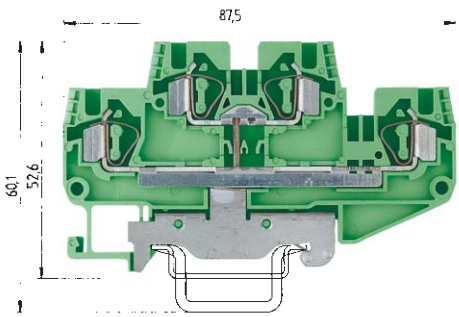


## WKF 4 E /D/SL/35

| fine stranded | solid | V | A |
|---|---|---|---|
| 0.13 - 4 mm² | 0.13 - 6 mm² | 800 V/8 kV/3 | 32 |

6 mm 11 mm

pending

## WKF 4 E SL/35

| fine stranded | solid | V | A |
|---|---|---|---|
| 0.13 - 4 mm² | 0.13 - 6 mm² | 800 V/8 kV/3 | 32 |

6 mm 11 mm

pending

| Type | Part no. | Std. pack | Type | Part no. | Std. pack |
|---|---|---|---|---|---|
| | | | | | |
| | | | | | |
| WKF 4 E /D/SL/35 | 56.704.9953.0 | 100 | WKF 4 E SL/35 | 56.704.9253.0 | 100 |
| | | | | | |
| | | | | | |
| | | | | | |
| | | | | | |
| 35x27x7,5 EN 60715 | 98.300.0000.0 | 1 | 35x27x7,5 EN 60715 | 98.300.0000.0 | 1 |
| 35x24x15 EN 60715 | 98.360.0000.0 | 1 | 35x24x15 EN 60715 | 98.360.0000.0 | 1 |
| 9708/2 S35 | Z5.522.8553.0 | 100 | 9708/2 S35 | Z5.522.8553.0 | 100 |
| WEF 1/35 | Z5.523.9353.0 | 100 | WEF 1/35 | Z5.523.9353.0 | 100 |
| APF 4 E... | 07.312.5753.0 | 10 | | | |
| | | | | | |
| | | | APF 4 E... | 07.312.5753.7 | 10 |
| TWF 4 E... | 07.312.5853.0 | 10 | | | |
| | | | | | |
| IVB WKF 4 – 2 | Z7.261.1227.0 | 10 | | | |
| IVB WKF 4 – 3 | Z7.261.1327.0 | 10 | | | |
| IVB WKF 4 – 4 | Z7.261.1427.0 | 10 | | | |
| IVB WKF 4 – 5 | Z7.261.1527.0 | 10 | | | |
| IVB WKF 4 – 6 | Z7.261.1627.0 | 10 | | | |
| IVB WKF 4 – 7 | Z7.261.1727.0 | 20 | | | |
| IVB WKF 4 – 8 | Z7.261.1827.0 | 20 | | | |
| IVB WKF 4 – 9 | Z7.261.1927.0 | 20 | | | |
| IVB WKF 4 – 10 | Z7.261.2027.0 | 20 | | | |
| | | | | | |
| LEL 4/1 WEISS | 05.561.8553.0 | 100 | LEL 4/1 WEISS | 05.561.8553.0 | 100 |
| LEL 4/2 GRAU | 05.561.8653.0 | 100 | LEL 4/2 GRAU | 05.561.8653.0 | 100 |
| LEL 4/3 SCHWARZ | 05.561.8753.0 | 100 | LEL 4/3 SCHWARZ | 05.561.8753.0 | 100 |
| ADF 4/4 GELB | 04.343.6153.8 | 10 | ADF 4/4 GELB | 04.343.6153.8 | 10 |
| DIN 5264 B 0,6x3,5 | 06.502.4000.0 | 5 | DIN 5264 B 0,6x3,5 | 06.502.4000.0 | 5 |
| DIN 5264 B 0,6x3,5 M | 06.502.5000.0 | 10 | DIN 5264 B 0,6x3,5 M | 06.502.5000.0 | 10 |
| | | | | | |
| | | | | | |

# Double tier blocks
# with spring clamp connection, type *WKF*

fasis

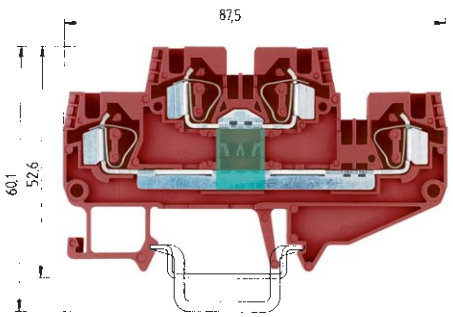


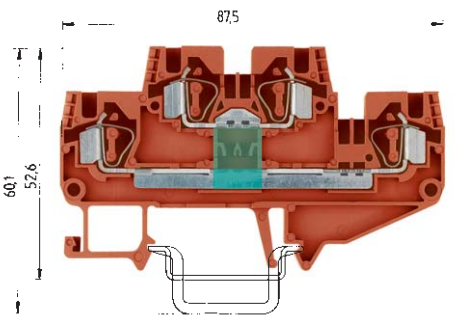


## WKF 4 E /35...

| | | fine stranded | solid | V | A |
|---|---|---|---|---|---|
| EN 60 947-7-1 | | 0.13 - 4 mm² | 0.13 - 6 mm² | | |
| UL ratings | field/factory wiring | | | | |
| CSA ratings | | | | | |
| Width | Wire strip length | 6 mm | | | 11 mm |
| Approvals | | pending | | | |

| | | | Type | Part no. | Std. pack |
|---|---|---|---|---|---|
| **Double tier block** | | Color: gray | | | |
| **Double tier-Branch circuit** | | Color: black | | | |
| **Double tier-Ground** | | Color: green/yellow | | | |
| **Function Terminal** | | Color: red | WKF 4 E /35... | 56.704.XX53.5 | |
| **Function Terminal** | | Color: orange | WKF 4 E /35... | 56.704.XX53.9 | |
| | | | | | |
| **Accessories** | | | | | |
| 1. Mounting rail 35, | 7.5 mm high | L = 2 m | 35x27x7,5 EN 60715 | 98.300.0000.0 | 1 |
| Mounting rail 35, | 15 mm high | L = 2 m | 35x24x15 EN 60715 | 98.360.0000.0 | 1 |
| 2. End clamp TS 35, with screw | | 8 mm wide | 9708/2 S35 | Z5.522.8553.0 | 100 |
| End clamp TS 35, without screw | | 8 mm wide | WEF 1/35 | Z5.523.9353.0 | 100 |
| 3. End plate | 1.5 mm wide | Color: gray | APF 4 E... | 07.312.5753.0 | 10 |
| | 1.5 mm wide | Color: blue | | | |
| | 1.5 mm wide | Color: green | | | |
| 4. Partition plate | 1.5 mm wide | Color: gray | TWF 4 E... | 07.312.5853.0 | 10 |
| | 1.5 mm wide | Color: blue | | | |
| 5. Cross connector | | 2pole | IVB WKF 4 – 2 | Z7.261.1227.0 | 10 |
| Insulated (jumper bar) | | 3pole | IVB WKF 4 – 3 | Z7.261.1327.0 | 10 |
| | | 4pole | IVB WKF 4 – 4 | Z7.261.1427.0 | 10 |
| | | 5pole | IVB WKF 4 – 5 | Z7.261.1527.0 | 10 |
| | | 6pole | IVB WKF 4 – 6 | Z7.261.1627.0 | 10 |
| | | 7pole | IVB WKF 4 – 7 | Z7.261.1727.0 | 20 |
| | | 8pole | IVB WKF 4 – 8 | Z7.261.1827.0 | 20 |
| | | 9pole | IVB WKF 4 – 9 | Z7.261.1927.0 | 20 |
| | | 10pole | IVB WKF 4 – 10 | Z7.261.2027.0 | 20 |
| 6. Vertical Jumper | | 1pole | | | |
| 7. Wire entry guide | | 0.13 – 0.2 mm² | LEL 4/1 WEISS | 05.561.8553.0 | 100 |
| | | 0.25 – 0.5 mm² | LEL 4/2 GRAU | 05.561.8653.0 | 100 |
| | | 0.75 – 1.0 mm² | LEL 4/3 SCHWARZ | 05.561.8753.0 | 100 |
| 8. Cover with warning symbol over 4 blocks | | | ADF 4/4 GELB | 04.343.6153.8 | 10 |
| 9. Screwdriver, uninsulated (jumper bar) | | | DIN 5264 B 0,6x3,5 | 06.502.4000.0 | 5 |
| Screwdriver, uninsulated (jumper bar), MINI | | | DIN 5264 B 0,6x3,5 M | 06.502.5000.0 | 10 |
| | | | | | |
| Marking accessories see page 48/49 and page 90/91 | | | | | |

## Function Diagram

56.704.7553.9
56.704.7553.5

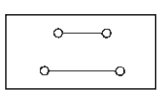

56.704.7153.5
56.704.7153.9

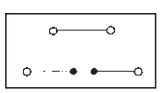

56.704.8053.9

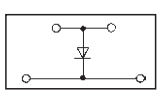

I = 1 A
U = 1000 V

56.704.8253.5

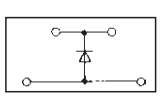

I = 1 A
U = 1000 V

56.704.7953.5

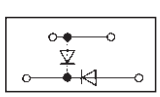

I = 1 A
U = 1000 V

56.704.8353.5

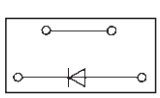

I = 1 A
U = 1000 V

56.704.7453.9
LED red

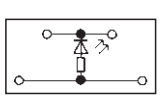

R = 4.7 KΩ
P = 0.5 W
U = 24 V DC

56.704.7253.5
LED red

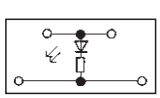

R = 4.7 KΩ
P = 0.5 W
U = 24 V DC

56.704.7353.5

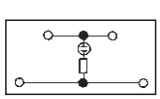

R = 680 KΩ
P = 0.25 W
U = 100-500 V

# fasis

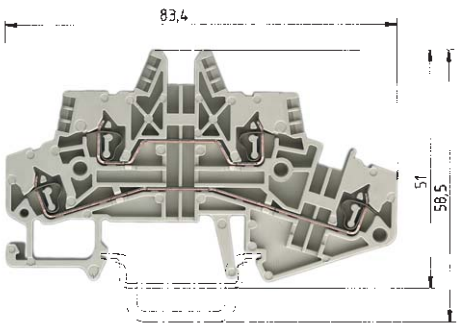


## WKF 1.5 E/35

| fine stranded | solid | V | A |
|---|---|---|---|
| 0.13 – 1.5 mm² | 0.13 – 2.5 mm² | 400 V/6 kV/3 | 17.5 |
| 30-14 AWG | | 300 V | 15 A |
| CSA No. 28-14 AWG | | 600 V | 20 A |
| 5 mm | | | 8 mm |

* **

| Type | Part no. | Std. pack |
|---|---|---|
| WKF 1,5 E/35 | 56.702.7053.0 | 100 |
| | | |
| | | |
| | | |
| | | |
| | | |
| | | |
| 35x27x7,5 EN 60715 | 98.300.0000.0 | 1 |
| 35x24x15 EN 60715 | 98.360.0000.0 | 1 |
| 9708/2 S35 | Z5.522.8553.0 | 100 |
| WEF 1/35 | Z5.523.9353.0 | 100 |
| APF 1,5 E | 07.312.3553.0 | 10 |
| | | |
| | | |
| TWF 1,5 E | 07.312.3653.0 | 10 |
| | | |
| IVB WKF 2,5 – 2 | Z7.280.6227.0 | 10 |
| IVB WKF 2,5 – 3 | Z7.280.6327.0 | 10 |
| IVB WKF 2,5 – 4 | Z7.280.6427.0 | 10 |
| IVB WKF 2,5 – 5 | Z7.280.6527.0 | 10 |
| IVB WKF 2,5 – 6 | Z7.280.6627.0 | 10 |
| IVB WKF 2,5 – 7 | Z7.280.6727.0 | 20 |
| IVB WKF 2,5 – 8 | Z7.280.6827.0 | 20 |
| IVB WKF 2,5 – 9 | Z7.280.6927.0 | 20 |
| IVB WKF 2,5 – 10 | Z7.280.7027.0 | 20 |
| IVB WKFC-V*) | Z7.261.1127.0 | |
| LEL 1,5/1 WEISS | 05.562.2453.0 | 100 |
| LEL 1,5/2 GRAU | 05.562.2553.0 | 100 |
| LEL 1,5/3 SCHWARZ | 05.562.2653.0 | 100 |
| ADF 1,5/4 GELB | 04.343.8353.8 | 10 |
| DIN 5264 B 0,6x3,5 | 06.502.4000.0 | 5 |
| DIN 5264 B 0,6x3,5 M | 06.502.5000.0 | 10 |
| * CL I, ZN1, AExe II | | |
| **CL I, ZN1, Exe II | | |

# DIN rail terminal blocks with spring clamp connection and pluggable connections

## fasis

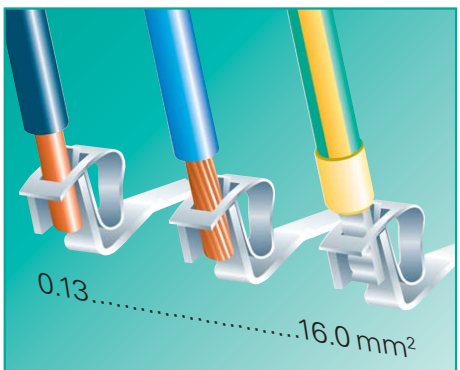


**System advantages**

❒ **Spring clamp connection,** screwless technology

Separation of electrical and mechanical functions

**Application advantages**

→ **Dynamic connections**
Protection of the connection against "cold flow" and creep

→ **Pre-programmed clamping force**
The clamping force required to connect the wire, is created by the spring elements of the clamp

→ **Secure and maintenance-free electrical connection**
According to EN 60947-7-1

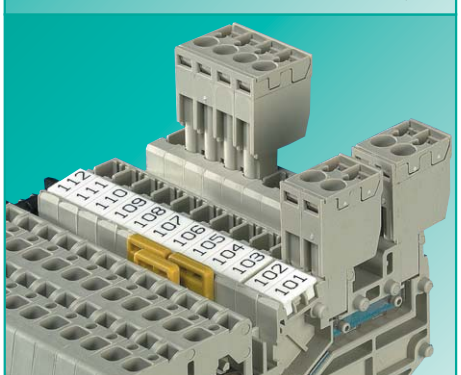

❒ **TOP connection**
Wire entry and screwdriver access in same plane

❒ **Built in Test Points**

❒ **Preassembled modules**

→ **Clear wiring**
In small confined spaces

→ **Test points for test plugs** up to Ø 2.3 mm on all clamping points, without having to remove the connected wire

→ **Reduced downtime** due to quick and easy component replacement

→ **Wiring errors reduced to a minimum**

→ **Cost reduction** in assembly on site

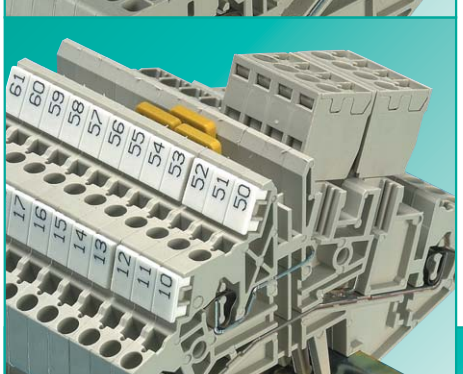

❒ **Pluggable wiring inside the control cabinet**

→ **Time saving due to pluggable accessories**

→ **Flexible potential commoning**

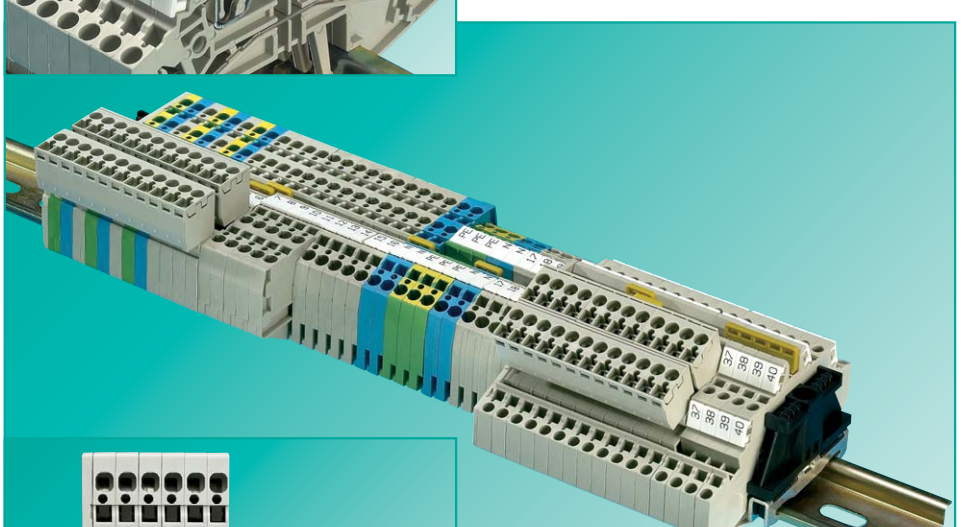

❒ Two versions of DIN rail terminal blocks:

→ WKF 2.5/D2/8113... with 2 inputs and 2 outputs on one potential, only 5 mm wide

→ WKF 2.5 E/8113/35 with 2 input and 2 output with different potentials in double-tier design

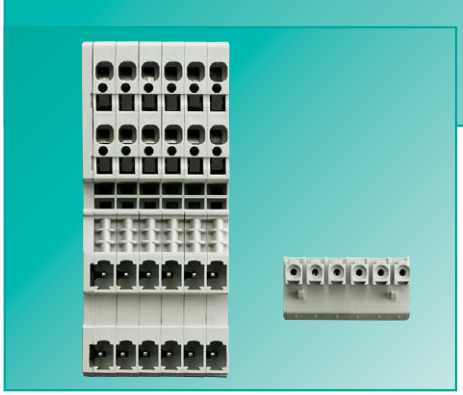

❒ Touch safe

❒ Safety through coding

→ Dead front safety as per IEC 60529 due to shrouded pins on the plug-in side

→ Coding pieces prevents incorrect mating of the pluggable connector

# fasis

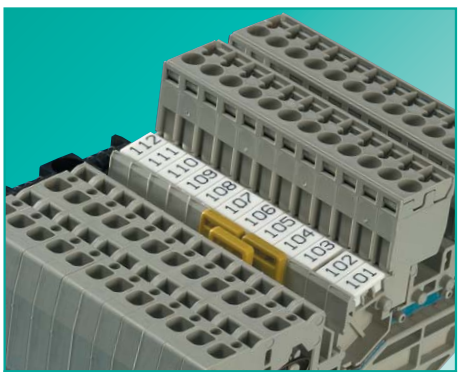

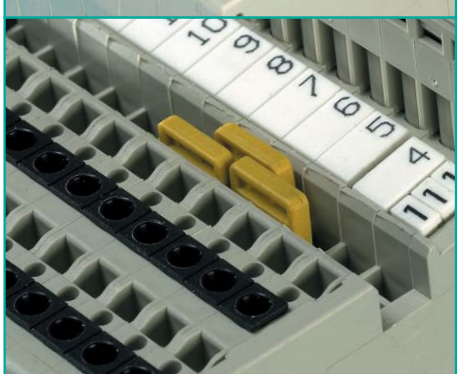

### Cross connection (Jumper Bars)

- The insulated cross connectors IVB WKF... are completely touch safe
- No partition plates required between jumpered terminal groups of different potential
- Cross connector IVB WKF 2.5... can bear the same ratied current as the terminal (pg. 17)

### Wire entry guides

- For the connection of wires with cross sections smaller than 18 AWG, we recommend the use of wire entry guides
- Wire entry guides prevent the wires from being inserted beyond the optimal clamping point and ensurs a safe and secure connection

### Marking systems

- Marking facility is down the center so that the marking tag is not covered by the conductor
- Single marking tag 5, 6, or 8 mm spacing
- Marking strips (10 tags) to snap on to the terminal blocks
- Tear-off marking strips for 3-digit marking facilities per block
- Custom marking upon request

### Cover with warning symbol

- Cover with warning symbol ADC to snap on to blocks which are still live after switched-off (VDE 0113)
- Cover can only be removed with a screwdriver

### DQS certificates for all products

- Quality standard as per DIN ISO 9001 in Development, Production, Assembly
- Continued control of the quality standard by means of regular internal and external quality audits
- Compatible with certificates of other countries:
  – BSI Certificate, Great Britain
  – SQS Certificate, Switzerland
  – Aib-Vincotte Certificate, Belgium
  – ÖQS Certificate, Austria

### Material

- Metal parts

  Special alloys and surface treatments provide low contact resistance and high corrosion resistance

  Clamping spring: stainless CrNi steel

  Current Carrying bar: tin-plated cooper

- Insulating material

  Polyamide has excellent electrical, chemical and mechanical characteristics

  Insulating housing:Polyamide 66/6

  Tracking resistance: CTI 600

  Flammability class: UL 94 V-0

(see also section ***facts*** & DATA)

Our ***wieplan*** software helps to plan your DIN rail terminal block assemblies (see page 10/11).

### Note

The information regarding cross-sectional areas and connection types pertains to wires without ferrules. Ferrules are not neccessary for secure connection.

The voltage ratings apply to the terminals in their intended application. When different products are mounted adjacent to each other, the proper isolation distances must be adhered to. For this purpose, **Wieland** offers a large selection of appopriate accessories.

If the ground blocks of the WKF series are not used in block assemblies but are mounted to the rail as single terminal blocks, end clamps have to be used.

A detailed description of technical data, the standards requirements, and the application conditions can be found in catalog section ***facts*** & DATA.

# Duo feed-through blocks with pluggable connection

**fasis**

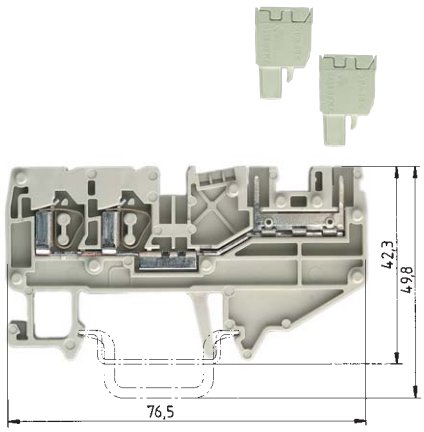


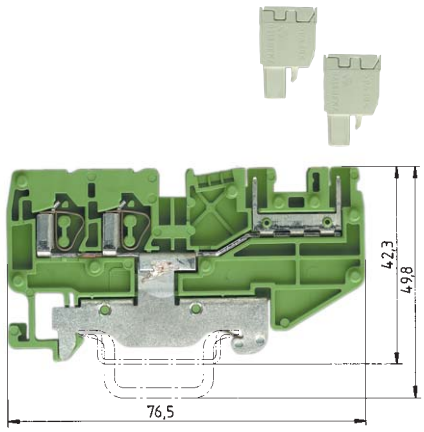


| | | WKF 2.5 D2/8113/35 | | | | WKF 2.5 D2/8113 SL/35 | | | |
|---|---|---|---|---|---|---|---|---|---|
| | | fine stranded | solid | V | A | fine stranded | solid | V | A |
| EN 60 947-7-1/DIN VDE 0611 T1 | | 0.13 – 2.5 mm² | 0.13 – 4 mm² | 250 V/4 kV/3 | 16 | 0.13 – 2.5 mm² | 0.13 – 4 mm² | 250 V/4 kV/3 | 16 |
| UL ratings | | No. 22-12 AWG | | 300 V | 15 | No. 22-12 AWG | | 300 V | |
| CSA ratings | | No. 24-12 AWG | | 300 V | 15 | No. 24-12 AWG | | 300 V | |
| Width | Wire strip length | 5 mm | | | 11 mm | 5 mm | | | 11 mm |
| Approvals | | | | | | | | | |

| | | Type | Part no. | Std. pack. | Type | Part no. | Std. pack. |
|---|---|---|---|---|---|---|---|
| **Duo feed-through block** | Color: gray | WKF 2,5 D2/8113/35 | 56.703.2053.0 | 100 | | | |
| | Color: blue | WKF 2,5 D2/8113/35 BLAU | 56.703.2053.6 | 100 | | | |
| **Duo ground block** | Color: green/yellow | | | | WKF 2,5 D2/8113 SL/35 | 56.703.9253.0 | 100 |
| **Double-tier block** | Color: gray | | | | | | |
| | | | | | | | |
| **Accessories** | | | | | | | |
| 1. Mounting rail 35, 7.5 mm high | L = 2 m | 35x27x7,5 EN 60715 | 98.300.0000.0 | 1 | 35x27x7,5 EN 60715 | 98.300.0000.0 | 1 |
| Mounting rail 35, 15 mm high | L = 2 m | 35x24x15 EN 60715 | 98.360.0000.0 | 1 | 35x24x15 EN 60715 | 98.360.0000.0 | 1 |
| 2. End clamp TS 35, with screw | 8 mm wide | 9708/2 S35 | Z5.522.8553.0 | 100 | 9708/2 S35 | Z5.522.8553.0 | 100 |
| End clamp TS 35, screwless | 8 mm wide | WEF 1/35 | Z5.523.9353.0 | 100 | WEF 1/35 | Z5.523.9353.0 | 100 |
| 3. End plate | Color: gray | APF 2,5/D2/8113 | 07.312.4153.0 | 10 | APF 2,5/D2/8113 | 07.312.4153.0 | 10 |
| | Color: blue | APF 2,5/D2/8113 | 07.312.4153.6 | 10 | | | |
| 4. Partition plate | Color: gray | | | | | | |
| | Color: blue | | | | | | |
| 5. Cross connector | 2pole | IVB WKF 2,5 – 2 | Z7.280.6227.0 | 10 | | | |
| insulated (jumper bar) | 3pole | IVB WKF 2,5 – 3 | Z7.280.6327.0 | 10 | | | |
| | 4pole | IVB WKF 2,5 – 4 | Z7.280.6427.0 | 10 | | | |
| | 5pole | IVB WKF 2,5 – 5 | Z7.280.6527.0 | 10 | | | |
| | 6pole | IVB WKF 2,5 – 6 | Z7.280.6627.0 | 10 | | | |
| | 7pole | IVB WKF 2,5 – 7 | Z7.280.6727.0 | 20 | | | |
| | 8pole | IVB WKF 2,5 – 8 | Z7.280.6827.0 | 20 | | | |
| | 9pole | IVB WKF 2,5 – 9 | Z7.280.6927.0 | 20 | | | |
| | 10pole | IVB WKF 2,5 – 10 | Z7.280.7027.0 | 20 | | | |
| 6. Wire entry guide | 0.13 – 0.2 mm² | LEL 2,5/1 WEISS | 05.561.6553.0 | 100 | LEL 2,5/1 WEISS | 05.561.6553.0 | 100 |
| | 0.25 – 0.5 mm² | LEL 2,5/2 GRAU | 05.561.6653.0 | 100 | LEL 2,5/2 GRAU | 05.561.6653.0 | 100 |
| | 0.75 – 1.0 mm² | LEL 2,5/3 SCHWARZ | 05.561.6753.0 | 100 | LEL 2,5/3 SCHWARZ | 05.561.6753.0 | 100 |
| 7. Cover with warning symbol over 4 blocks | | ADF 2,5/4 GELB | 04.343.6053.8 | 10 | ADF 2,5/4 GELB | 04.343.6053.8 | 10 |
| Cover with warning symbol over 4 poles | | AD 8113/4 GELB | 04.343.6853.8 | 10 | AD 8113/4 GELB | 04.343.6853.8 | 10 |
| 8. Screwdriver, uninsulated | | DIN 5264 B 0,6x3,5 | 06.502.4000.0 | 5 | DIN 5264 B 0,6x3,5 | 06.502.4000.0 | 5 |
| 9. Coding strip | | | 05.561.0053.0 | 100 | | 05.561.0053.0 | 100 |
| 10. Test plug with sping connection | | PSWKC/F | Z1.299.9753.0 | | PSWKC/F | Z1.299.9753.0 | |
| End plate / spacer | | ZP/APPS | 07.312.6053.0 | | ZP/APPS | 07.312.6053.0 | |
| Blank module for staggered testing | | | 01.299.9753.0 | | | 01.299.9753.0 | |
| Marking accessories see page 48/49 and page 90/91 | | | | | Please see note on page 17! | | |

# Pluggable connector

**Spring clamp system**

**5 mm spacing** **2.5 mm²**

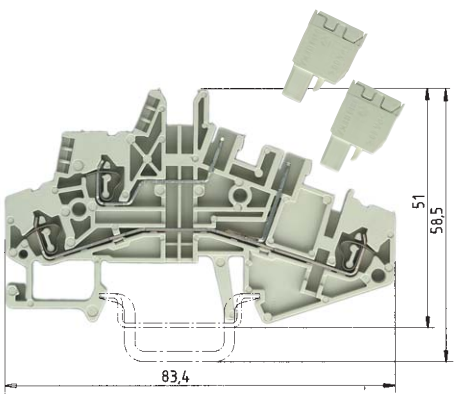

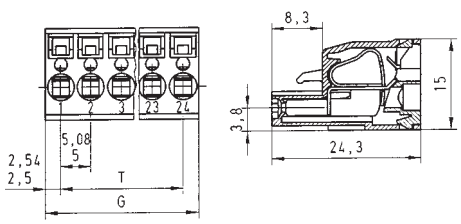


## WKF 1.5 E/8113/35

| fine stranded | solid | V | A |
|---|---|---|---|
| 0.13 – 1.5 mm² | 0.13 – 2.5 mm² | 250 V/4 kV/3 | 16 |
| No. 22-14 | | 300 V | 15 |
| No. 24-14 | | | |
| 5 mm | | | 8 mm |

Rated voltages: VDE 0110/01.89

250 V/4 kV/3 – Overvoltage category III
400 V/4 kV/2 – Overvoltage category II
1000 V/4 kV/1 – Overvoltage category I
CSA No. 22-12 AWG 300 V 12 A

Rated current: 12 A

## Type 8113 BFK

| fine stranded | solid | V | A |
|---|---|---|---|
| 0.13 – 2.5 mm² | 0.13 – 4 mm² | | 12 |
| 22-12 AWG | | 300 V | 12 |
| 22-12 AWG | | 300 V | 12 |
| 5 mm | | | 9 mm |

| Type | Part no. | Std. pack. | Std. pack. | G | T | Pole | Part no. unmarked | Part no. marked |
|---|---|---|---|---|---|---|---|---|
| | | | **5 mm pitch** | | | | unmarked | marked |
| | | | 100 | 10.00 | 5.00 | 2 | 25.820.3253.0 | 25.820.0253.0 |
| WKF 1,5 E/8113/35 | 56.702.2053.0 | 100 | 100 | 15.00 | 10.00 | 3 | 25.820.3353.0 | 25.820.0353.0 |
| | | | 50 | 20.00 | 15.00 | 4 | 25.820.3453.0 | 25.820.0453.0 |
| | | | 50 | 25.00 | 20.00 | 5 | 25.820.3553.0 | 25.820.0553.0 |
| 35x27x7,5 EN 60715 | 98.300.0000.0 | 1 | 50 | 30.00 | 25.00 | 6 | 25.820.3653.0 | 25.820.0653.0 |
| 35x24x15 EN 60715 | 98.360.0000.0 | 1 | 50 | 35.00 | 30.00 | 7 | 25.820.3753.0 | 25.820.0753.0 |
| 9708/2 S35 | Z5.522.8553.0 | 100 | 50 | 40.00 | 35.00 | 8 | 25.820.3853.0 | 25.820.0853.0 |
| WEF 1/35 | Z5.523.9353.0 | 100 | 50 | 45.00 | 40.00 | 9 | 25.820.3953.0 | 25.820.0953.0 |
| APF 1,5/E/8113 | 07.312.4753.0 | 10 | 50 | 50.00 | 45.00 | 10 | 25.820.4053.0 | 25.820.1053.0 |
| | | | 50 | 55.00 | 50.00 | 11 | 25.820.4153.0 | 25.820.1153.0 |
| | | | 50 | 60.00 | 55.00 | 12 | 25.820.4253.0 | 25.820.1253.0 |
| | | | 50 | 65.00 | 60.00 | 13 | 25.820.4353.0 | 25.820.1353.0 |
| IVB WKF 2,5 – 2 | Z7.280.6227.0 | 10 | 50 | 70.00 | 65.00 | 14 | 25.820.4453.0 | 25.820.1453.0 |
| IVB WKF 2,5 – 3 | Z7.280.6327.0 | 10 | 50 | 75.00 | 70.00 | 15 | 25.820.4553.0 | 25.820.1553.0 |
| IVB WKF 2,5 – 4 | Z7.280.6427.0 | 10 | 50 | 80.00 | 75.00 | 16 | 25.820.4653.0 | 25.820.1653.0 |
| IVB WKF 2,5 – 5 | Z7.280.6527.0 | 10 | 17- to 24-pole configurations upon request | | | | | |
| IVB WKF 2,5 – 6 | Z7.280.6627.0 | 10 | | | | | | |
| IVB WKF 2,5 – 7 | Z7.280.6727.0 | 20 | | | | | | |
| IVB WKF 2,5 – 8 | Z7.280.6827.0 | 20 | | | | | | |
| IVB WKF 2,5 – 9 | Z7.280.6927.0 | 20 | | | | | | |
| IVB WKF 2,5 – 10 | Z7.280.7027.0 | 20 | | | | | | |
| LEL 1,5/1 WEISS | 05.562.2453.0 | 100 | | | | | | |
| LEL 1,5/2 GRAU | 05.562.2553.0 | 100 | | | | | | |
| LEL 1,5/3 SCHWARZ | 05.562.2653.0 | 100 | | | | | | |
| ADF 2,5/4 GELB | 04.343.6053.8 | 10 | | | | | DIN 5264 B 0,6x3,5 06.502.4000.0 | 5 |
| AD 8113/4 GELB | 04.343.6853.8 | 10 | | | | | 05.561.9153.0 | 100 |
| DIN 5264 B 0,6x3,5 | 06.502.4000.0 | 5 | | | | | | |
| | 05.561.0053.0 | 100 | | | | | | |
| PSWKC/F | Z1.299.9753.0 | | | | | | | |
| ZP/APPS | 07.312.6053.0 | | | | | | | |
| | 01.299.9753.0 | | | | | | | |

# Disconnect blocks
# with spring clamp connection, type *WKF*

**fasis**

**Fuse plug:**

Nominal voltage: 250 V ~ to VDE 0820 T2/IEC 257
Nominal current: – 6.3 A for single blocks
– 4 A for neighbouring blocks

Max. power loss of the fuse insert: 1.6 W
Indicator (24 V): LED color red
current consumption: 10.3 mA
Indicator (110 - 220 V): LED color red
current consumption: 0.3 mA

*) The current load is determined by the fuse. The voltage range is determined by the built-in LED.

**) The current load is determined by the component installed

***) For use with 5 x 20 mm fuses

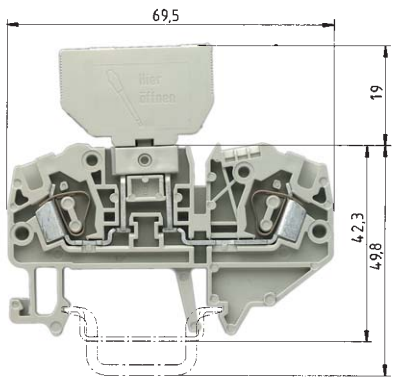


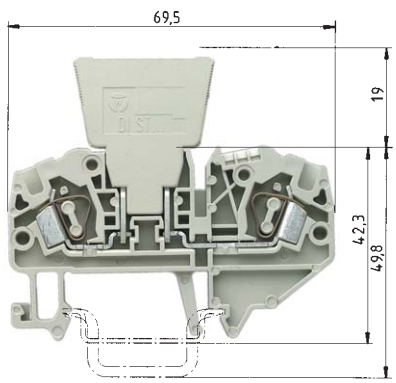


| | | | | | | | |
|---|---|---|---|---|---|---|---|
| Periodic peak voltage 1000 V | | | | | | | |
| Direction of the diode: | Anode | Cathode[1)] | | | | | |
| | Cathode | Anode[2)] | | | | | |
| | | | **WKF 4 TKG/35 with fuse holder** | | | **WKF 4 TKG/35 with diode plug** | |
| | | | fine stranded | solid | V | fine stranded | solid | V |
| EN 60 947-7-1, EN 60 127-6 | | | 0.13 – 4 mm² | 0.13 – 6 mm² | 800 V/8 kV/3*) | 0.13 – 4 mm² | 0.13 – 6 mm² | 800 V/8 kV/3 |
| UL ratings | | | No. 22-10 AWG | | 600 V | No. 22-10 AWG | | 600 V |
| CSA ratings | | | No. 22-10 AWG | | 300 V | No. 22-10 AWG | | 600 V |
| Width | | Wire strip length | 6 mm | | | 6 mm | | |
| Approvals | | | | | | | | |

| | | Type | Part no. | Std. pack. | Type | Part no. | Std. pack. |
|---|---|---|---|---|---|---|---|
| **Disconnect block** | Color: gray | WKF 4 TKG/35 | 56.704.4053.0 | 100 | WKF 4 TKG/35 | 56.704.4053.0 | 100 |
| | | | | | | | |
| **Fuse holder** for fuse 5 x 20 | Color: gray | Si ST | Z1.299.4055.0 | | | | |
| **Fuse holder** with indicator (24 V) | Color: gray | Si ST LED | Z1.299.4155.0 | 10 | | | |
| **Fuse holder** with indicator (110 - 220 V) | Color: gray | Si ST GL | Z1.299.4255.0 | | | | |
| Diode plug – empty $J_{max}$ = 10 A | Color: gray | | | | DIST ... | Z1.299.3055.0 | |
| Diode plug – diode $J_{max}$ = 1 A | Color: gray | | | | DIST-1 N 4007-1[1)] | Z1.299.3155.0 | |
| Diode plug – diode $J_{max}$ = 1 A | Color: gray | | | | DIST-1 N 4007-2[2)] | Z1.299.3355.0 | |
| Diode plug with jumper $J_{max}$ = 10 A | Color: gray | | | | DIST-D | Z1.299.3255.0 | |
| | | | | | | | |
| **Accessories** | | | | | | | |
| 1. Mounting rail 35, 7.5 mm high | L = 2 m | 35x27x7,5 EN 60715 | 98.300.0000.0 | 1 | 35 x 27 x 7,5 EN 60715 | 98.300.0000.0 | 1 |
| Mounting rail 35, 15 mm high | L = 2 m | 35x24x15 EN 60715 | 98.360.0000.0 | 1 | 35 x 24 x 15 EN 60715 | 98.360.0000.0 | 1 |
| Mounting rail 35, 15 mm high | L = 2 m | 35 x 27 x 15 | 98.370.0000.0 | 1 | 35 x 27 x 15 | 98.370.0000.0 | 1 |
| 2. End clamp TS 35, with screw | 8 mm wide | 9708/2 S35 | Z5.522.8553.0 | 100 | 9708/2 S35 | Z5.522.8553.0 | 100 |
| End clamp TS 35, screwless | 8 mm wide | WEF 1/35 | Z5.523.9353.0 | 100 | WEF 1/35 | Z5.523.9353.0 | 100 |
| 3. End plate | Color: gray | APF 4 TK | 07.312.2853.0 | 10 | APF 4 TK | 07.312.2853.0 | 10 |
| 4. Partition plate | | | | | | | |
| 5. Cross connector | 2pole | IVB WKF 4-2 | Z7.261.1227.0 | 10 | IVB WKF 4-2 | Z7.261.1227.0 | 10 |
| insulated (jumper bar) | 3pole | IVB WKF 4-3 | Z7.261.1327.0 | 10 | IVB WKF 4-3 | Z7.261.1327.0 | 10 |
| | 4pole | IVB WKF 4-4 | Z7.261.1427.0 | 10 | IVB WKF 4-4 | Z7.261.1427.0 | 10 |
| | 5pole | IVB WKF 4-5 | Z7.261.1527.0 | 10 | IVB WKF 4-5 | Z7.261.1527.0 | 10 |
| | 6pole | IVB WKF 4-6 | Z7.261.1627.0 | 10 | IVB WKF 4-6 | Z7.261.1627.0 | 10 |
| | 7pole | IVB WKF 4-7 | Z7.261.1727.0 | 20 | IVB WKF 4-7 | Z7.261.1727.0 | 20 |
| | 8pole | IVB WKF 4-8 | Z7.261.1827.0 | 20 | IVB WKF 4-8 | Z7.261.1827.0 | 20 |
| | 9pole | IVB WKF 4-9 | Z7.261.1927.0 | 20 | IVB WKF 4-9 | Z7.261.1927.0 | 20 |
| | 10pole | IVB WKF 4-10 | Z7.261.2027.0 | 20 | IVB WKF 4-10 | Z7.261.2027.0 | 20 |
| 6. Wire entry guide | 0.13 – 0.2 mm² | LEL 4/1 WEISS | 05.561.8553.0 | 100 | LEL 4/1 WEISS | 05.561.8553.0 | 100 |
| | 0.25 – 0.5 mm² | LEL 4/2 GRAU | 05.561.8653.0 | 100 | LEL 4/2 GRAU | 05.561.8653.0 | 100 |
| | 0.75 – 1.0 mm² | LEL 4/3 SCHWARZ | 05.561.8753.0 | 100 | LEL 4/3 SCHWARZ | 05.561.8753.0 | 100 |
| 7. Cover with warning symbol over 4 blocks | | ADF 4/4 GELB | 04.343.6153.8 | 10 | ADF 4/4 GELB | 04.343.6153.8 | 10 |
| 8. Screwdriver, uninsulated | | DIN 5264 B 0,6x3,5 | 06.502.4000.0 | 5 | DIN 5264 B 0,6 x 3,5 | 06.502.4000.0 | 5 |
| | | | | | | | |
| Marking accessories see page 48/49 and page 90/91 | | | | | | | |

# Knife edge disconnect block with spring clamp connection, type *WKF*

The disconnecting knife in these WKF versions swing in and out on a pivot point. The distinctive color of the disconnecting lever signals the open state. The terminals can be connected with the lever open or closed.

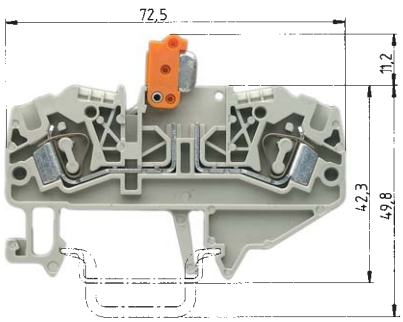


## WKF 4 TKM/35

| | | fine stranded | solid | V | A |
|---|---|---|---|---|---|
| EN 60 947-7-1/DIN VDE 0611 T1 | | 0.13 – 4 mm² | 0.13 – 6 mm² | 800 V/8 kV/3 | 16 |
| UL ratings | | No. 22-10 AWG | | 600 V | 20 |
| CSA ratings | | No. 22-10 AWG | | 600 V | 20 |
| Width | Wire strip length | 6 mm | | | 11 mm |
| Approvals | | | | | |

| | | Type | Part no. | Std. pack. |
|---|---|---|---|---|
| **Knife edge disconnect block** | Color: gray | WKF 4 TKM/35 | 56.704.2053.0 | 100 |
| **Accessories** | | | | |
| 1. Mounting rail 35, 7.5 mm high | L = 2 m | 35x27x7,5 EN 60715 | 98.300.0000.0 | 1 |
| Mounting rail 35, 15 mm high | L = 2 m | 35x24x15 EN 60715 | 98.360.0000.0 | 1 |
| Mounting rail 35, 15 mm high | L = 2 m | 35 x 27 x 15 | 98.370.0000.0 | 1 |
| 2. End clamp TS 35 | 8 mm wide | 9708/2 S35 | Z5.522.8553.0 | 100 |
| End clamp TS 35, screwless | 8 mm wide | WEF 1/35 | Z5.523.9353.0 | 100 |
| 3. End plate | Color: gray | APF 4 TKM | 07.312.4353.0 | 10 |
| 4. Partition plate | | | | |
| 5. Cross connector | 2pole | IVB WKF 4-2 | Z7.261.1227.0 | 10 |
| insulated (jumper bar) | 3pole | IVB WKF 4-3 | Z7.261.1327.0 | 10 |
| | 4pole | IVB WKF 4-4 | Z7.261.1427.0 | 10 |
| | 5pole | IVB WKF 4-5 | Z7.261.1527.0 | 10 |
| | 6pole | IVB WKF 4-6 | Z7.261.1627.0 | 10 |
| | 7pole | IVB WKF 4-7 | Z7.261.1727.0 | 20 |
| | 8pole | IVB WKF 4-8 | Z7.261.1827.0 | 20 |
| | 9pole | IVB WKF 4-9 | Z7.261.1927.0 | 20 |
| | 10pole | IVB WKF 4-10 | Z7.261.2027.0 | 20 |
| 6. Wire entry guide | 0.13 - 0.2 mm² | LEL 4/1 WEISS | 05.561.8553.0 | 100 |
| | 0.25 - 0.5 mm² | LEL 4/2 GRAU | 05.561.8653.0 | 100 |
| | 0.75 - 1.0 mm² | LEL 4/3 SCHWARZ | 05.561.8753.0 | 100 |
| 7. Cover with warning symbol over 4 blocks | | ADF 4/4 GELB | 04.343.6153.8 | 10 |
| 8. Screwdriver, uninsulated | | DIN 5264 B 0,6x3,5 | 06.502.4000.0 | 5 |

# Mini spring terminals, type *WKMF*

# *fasis* MINI

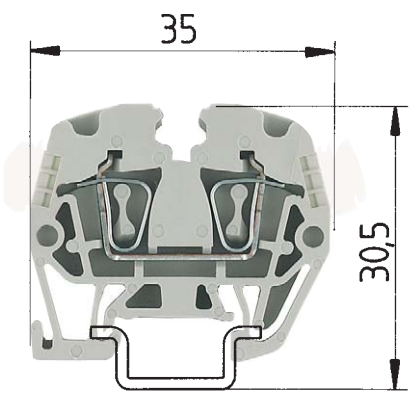


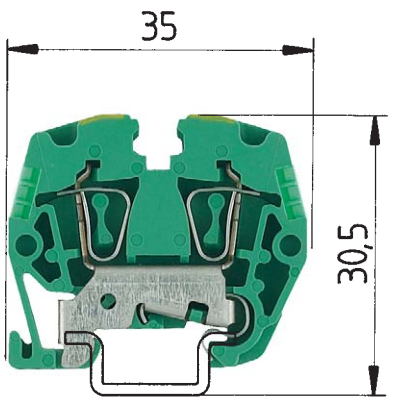


| | | WKMF 2.5/15 | | | | WKMF 2.5 SL/15 | | | |
|---|---|---|---|---|---|---|---|---|---|
| | | fine stranded | solid | V | A | fine stranded | solid | V | A |
| EN 60 947-7-1 | | 0.13 – 2.5 mm² | 0.13 – 2.5 mm² | 500 V/6kV/3 | 24 | 0.13 – 2.5 mm² | 0.13 – 2.5 mm² | 500 V/6kV/3 | 24 |
| UL ratings | field/factory wiring | No. 26-12 AWG | | 600 V | 20 | No. 26-12 AWG | | 600 V | 20 |
| CSA ratings | | No. 26-12 AWG | | 300 V | 20 | No. 26-12 AWG | | 300 V | 20 |
| Width | Wire strip length | 5 mm | | | 10 mm | 5 mm | | | 10 mm |
| Approvals | | pending | | | | pending | | | |

| | | | Type | Part no. | Std. pack. | Type | Part no. | Std. pack. |
|---|---|---|---|---|---|---|---|---|
| **Feed-through terminal** | | Color: gray | WKMF 2,5/15 | 55.703.0053.0 | | | | |
| **Feed-through terminal** | | Color: blue | WKMF 2,5/15 | 55.703.0053.6 | | | | |
| **Ground terminal** | | Color: green/yellow | | | | WKMF 2,5 SL/15 | 55.703.9053.0 | |
| | | | | | | | | |
| **Accessories** | | | | | | | | |
| 1. Mounting rail 15, 5.5 mm high | | L = 2 m | 9021/15x5,5 EN 60715 | 98.090.0015.0 | 10 | 9021/15x5,5 EN 60715 | 98.090.0015.0 | 10 |
| 2. End clamp TS 15, metal | | 7.5 mm wide | 9222 | Z5.522.5010.0 | 100 | 9222 | Z5.522.5010.0 | 100 |
| End clamp TS 15, polyamide | | 7.5 mm wide | 9208 S 15 | Z5.522.7553.0 | 100 | 9208 S 15 | Z5.522.7553.0 | 100 |
| 3. End plate | 1.5 mm wide | Color: gray | APMF 2,5 /15 | 07.312.5953.0 | | APMF 2,5 /15 | 07.312.5953.0 | |
| | 1.5 mm wide | Color: blue | | | | | | |
| | 1.5 mm wide | Color: green | | | | | | |
| 4. Partition plate | 1.5 mm wide | Color: gray | | | | | | |
| | 1.5 mm wide | Color: blue | | | | | | |
| 5. Cross connector | 2pole | IVB WKMF 2,5 – 2 | Z7.260.0229.0 | | | | | |
| insulated (jumper bar) | | 3pole | IVB WKMF 2.5 – 3 | Z7.260.0329.0 | | | | |
| | | 4pole | IVB WKMF 2.5 – 4 | Z7.260.0429.0 | | | | |
| | | 5pole | IVB WKMF 2.5 – 5 | Z7.260.0529.0 | | | | |
| | | 6pole | IVB WKMF 2.5 – 6 | Z7.260.0629.0 | | | | |
| | | 7pole | IVB WKMF 2.5 – 7 | Z7.260.0729.0 | | | | |
| | | 8pole | IVB WKMF 2.5 – 8 | Z7.260.0829.0 | | | | |
| | | 9pole | IVB WKMF 2.5 – 9 | Z7.260.0929.0 | | | | |
| | | 10pole | IVB WKMF 2.5 – 10 | Z7.260.1029.0 | | | | |
| | | 50pole | IVB WKMF 2.5 – 10 | Z7.260.0029.0 | | | | |
| 6. Wire entry guide | 0.13 – 0.2 mm² | | | | | | | |
| | 0.25 – 0.5 mm² | | | | | | | |
| | 0.75 – 1.0 mm² | | | | | | | |
| 7. Cover with warning symbol for 4 terminals | | | | | | | | |
| 8. Screwdriver, uninsulated | | | DIN 5264 B 0,6x3,5 | 06.502.4000.0 | 5 | DIN 5264 B 0,6x3,5 | 06.502.4000.0 | 5 |
| Screwdriver, uninsulated, MINI | | | DIN 5264 B 0,6x3,5 M | 06.502.5000.0 | 10 | DIN 5264 B 0,6x3,5 M | 06.502.5000.0 | 10 |
| | | | | | | | | |
| | | | | | | | | |
| | | | | | | | | |
| | | | | | | | | |
| Marking accessories see page 48/49 and page 90/91 | | | | | | | | |

# fasis

# Sensor and actuator blocks with spring clamp connection, type *WKF 1.5 KO...*

fasis

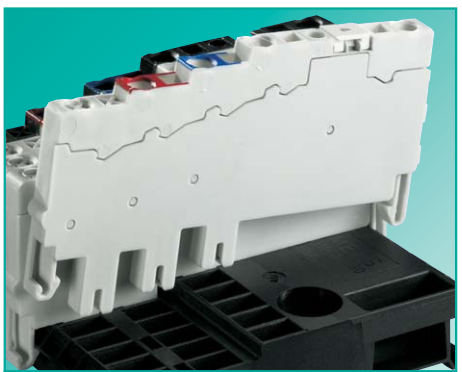

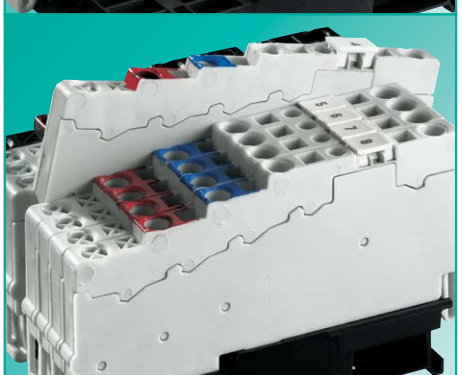

**System advantages**

- ❒ Built in Bus System on the base module for power distribution (+, –, shield)
- ❒ Separate terminal for power input
- ❒ 35 mm DIN rail or panel mount
- ❒ Individual blocks can be replaced without interrupting power to the other sensor and actuator blocks
- ❒ Clear wiring with TOP connection, even in narrow spaces
- ❒ Compact design

**Application advantages**

- → Snapping a sensor or actuator terminal into the base module automatically establishes direct contact to the bus bar
- → No external jumper bars required
- → The configuration of the base module matches standard I/O cards of PLC's with 8 or 16 I/O
- → Modifications and expansions can be easily and quickly done
- → Safe and easy connection of sensors and actuators

R 8 sensors or actuators can be terminated in a 45 x 65 mm (1.75" x 2.5") area

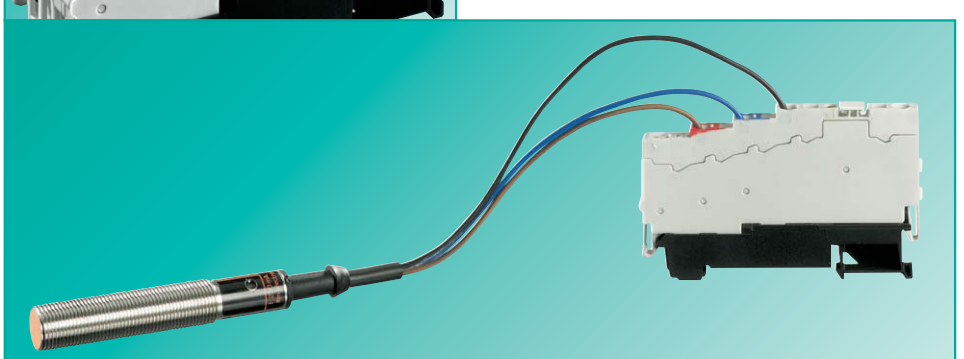

❒ Sensor block WKF 1.5 KOI 3L... for the connection of proximity switches

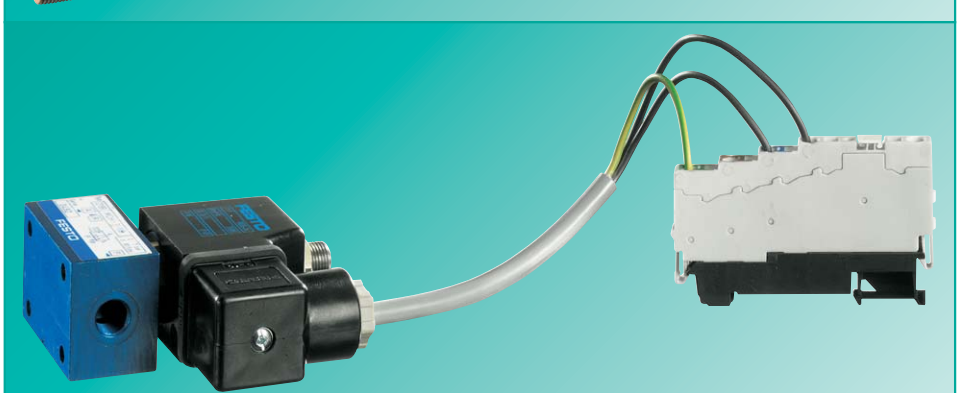

❒ Actuator block WKF 1,5 KOA 2L... for the connection of actuators such as solenoid valves

- ❒ Sensor/Actuator terminals available with yellow LED for switch status indication
- ❒ Power input terminals available with green LED for "Power On" indication

→ Easy maintenance and remote trouble-shooting of the electrical system

# fasis

### Cross connection (Jumpering)

- ❒ Potential commoning is achieved by snapping the blocks on to the base module
- ❒ Dead front safety covers for unused termination points

### Wire entry guides

- ❒ Recommended for wires smaller than 18 AWG

  Prevent the wires from being inserted beyond the optimal clamping point for safe and secure connections

### Marking facilities

- ❒ Single marking tag in 5-mm spacing
- ❒ Marking strips (10 single marking tags) to the snap on to the terminal blocks

- ❒ Tear-off marking strips for 3-digit marking facilities per block
- ❒ Custom marking upon request

### DQS certificates for all products

- ❒ Quality standard as per DIN ISO 9001 in Development, Production, Assembly
- ❒ Continued control of the quality standard by means of regular internal and external quality audits
- ❒ Compatible with certificates of other countries:
  – BSI Certificate, Great Britain
  – SQS Certificate, Switzerland
  – Aib-Vincotte Certificate, Belgium
  – ÖQS Certificate, Austria

### Material

- ❒ Metal parts

  Special alloys and surface treatments provide low contact resistance and high corrosion resistance

  Clamping spring: stainless CrNi steel

  Current Carrying bar: tin-plated copper

- ❒ Insulating material

  Polyamide has excellent electrical, chemical and mechanical characteristics

  Insulating housing: Polyamide 66/6

  Tracking resistance: CTI 600

  Flammability class: UL 94 V-2

(see also section ***facts*** & DATA)

Our ***wieplan*** software helps to plan your DIN rail terminal block assemblies (see page 10/11).

### Note

The information regarding cross-sectional areas and connection types pertains to wires without ferrules. Ferrules are not neccessary for secure connection.

The voltage ratings apply to the terminals in their intended application. When different products are mounted adjacent to each other, the proper isolation distances must be adhered to. For this purpose, **Wieland** offers a large selection of appopriate accessories.

A detailed description of technical data, the standards requirements, and the application conditions can be found in catalog section ***facts*** & DATA.

# Sensor and actuator blocks with spring clamp connection, type *WKF 1.5 KO...*

fasis

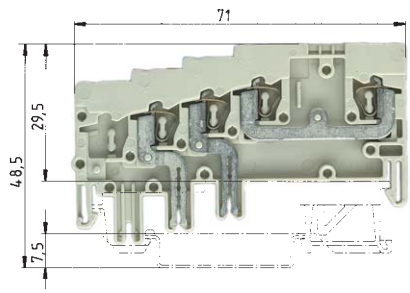


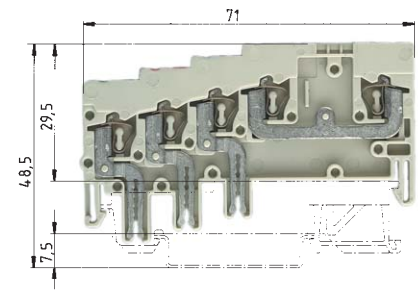


**37.702.7453.0**
* 65 V/1.,5 kV/3

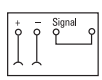


**37.702.8453.0**
* DC 24 V
same as picture, but with LED

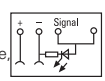


**37.702.7553.0**
* 65 V/1.5 kV/3

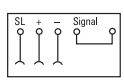


**37.702.8553.0**
* DC 24 V
same as picture, but with LED

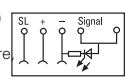


| | | WKF 1.5 KOI 3L... | | | | WKF 1.5 KOI 3L/SL... | | | |
|---|---|---|---|---|---|---|---|---|---|
| | | fine stranded | solid | V | A | fine stranded | solid | V | A |
| EN 60 947-7-1/DIN VDE 0611 T1 | | 0.13 – 1.5 mm² | 0.13 – 1.5 mm² | * | 10 | 0.13 – 1.5 mm² | 0.13 – 1.5 mm² | * | 10 |
| UL ratings | field/factory wiring | | | | | | | | |
| CSA ratings | | No. 28-16 AWG | | | 65 V | No. 28-16 AWG | | | 65 V |
| Width | Wire strip length | 10 A | | | | 10 A | | | |
| Approvals | | 5 mm | | | 10 mm | 5 mm | | | 10 mm |

| | | Type | Part no. | Std. pack. | Type | Part no. | Std. pack. |
|---|---|---|---|---|---|---|---|
| **Sensor block** | Color: gray | WKF 1,5 KOI 3L | 37.702.7453.0 | 50 | | | |
| **Sensor block with LED (PNP)** | Color: gray | WKF 1,5 KOI 3L-PGE | 37.702.8453.0 | 50 | | | |
| **Sensor block** | Color: gray | | | | WKF 1,5 KOI 3L/SL | 37.702.7553.0 | 50 |
| **Sensor block with LED (PNP)** | Color: black | | | | WKF 1,5 KOI 3L/SL-PGE | 37.702.8553.0 | 50 |
| **Supply block** | Color: black | | | | | | |
| **Supply block with LED** | Color: gray | | | | | | |
| **Actuator block** | Color: gray | | | | | | |
| **Actuator block with LED** | Color: gray | | | | | | |
| **Connection module for 9 blocks** | Color: black | | | | | | |
| **Connection module for 18 blocks** | Color: black | | | | | | |
| | | | | | | | |
| **Accessories** | | | | | | | |
| 1. Mounting rail 35, 7.5 mm high | L = 2 m | 35x27x7,5 EN 60715 | 98.300.0000.0 | 1 | 35x27x7,5 EN 60715 | 98.300.0000.0 | 1 |
| Mounting rail 35, 15 mm high | L = 2 m | 35x24x15 EN 60715 | 98.360.0000.0 | 1 | 35x24x15 EN 60715 | 98.360.0000.0 | 1 |
| 2. End clamp TS 35, with screw | 8 mm wide | 9708/2 S35 | Z5.522.8553.0 | 100 | 9708/2 S35 | Z5.522.8553.0 | 100 |
| End clamp TS 35, screwless | 8 mm wide | WEF 1/35 | Z5.523.9353.0 | 100 | WEF 1/35 | Z5.523.9353.0 | 100 |
| 3. End plate | | | | | | | |
| 4. Partition plate | | | | | | | |
| 5. Cross connector | 2pole | | | | | | |
| insulated (jumper bar) | 3pole | | | | | | |
| | 4pole | | | | | | |
| | 5pole | | | | | | |
| | 6pole | | | | | | |
| | 7pole | | | | | | |
| | 8pole | | | | | | |
| | 9pole | | | | | | |
| | 10pole | | | | | | |
| 6. Wire entry guide | 0.13 – 0.2 mm² | LEL 1,5/1 WEISS | 05.562.2453.0 | 100 | LEL 1,5/1 WEISS | 05.562.2453.0 | 100 |
| | 0.25 – 0.5 mm² | LEL 1,5/2 GRAU | 05.562.2553.0 | 100 | LEL 1,5/2 GRAU | 05.562.2553.0 | 100 |
| | 0.75 – 1.0 mm² | LEL 1,5/3 SCHWARZ | 05.562.2653.0 | 100 | LEL 1,5/3 SCHWARZ | 05.562.2653.0 | 100 |
| 7. Cover for connection module | | | | | | | |
| 8. Screwdriver, uninsulated | | DIN 5264 B 0,6x3,5 | 06.502.4000.0 | 5 | DIN 5264 B 0,6x3,5 | 06.502.4000.0 | 5 |
| | | | | | | | |
| Marking accessories see page 48/49 and page 90/91 | | | | | | | |

# fasis

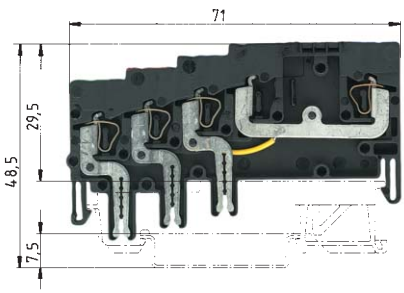


**37.702.7753.0**
* 65 V/1.5 kV/3

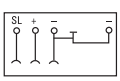


**37.702.8753.0**
* DC 24 V
same as picture,
but with LED

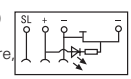


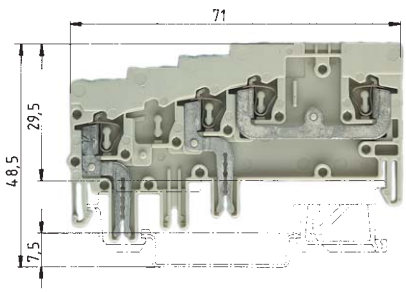


**37.702.7653.0**
* 65 V/1.5 kV/3

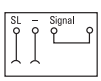


**37.702.8653.0**
* DC 24 V
same as picture,
but with LED

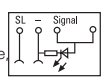


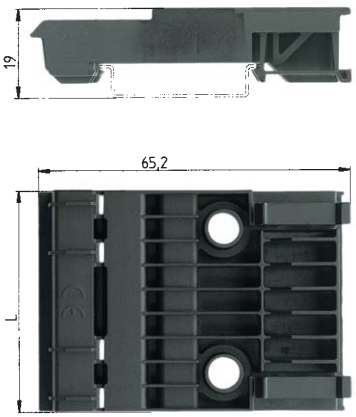


## WKF 1.5 KOE...

| fine stranded | solid | V | A |
|---|---|---|---|
| 0.13 – 1.5 mm² | 0.13 – 1.5 mm² | * | 10 |

No. 28-16 AWG 65 V
10 A
5 mm 10 mm

## WKF 1.5 KOA 2L...

| fine stranded | solid | V | A |
|---|---|---|---|
| 0.13 – 1.5 mm² | 0.13 – 1.5 mm² | * | 10 |

No. 28-16 AWG 65 V
10 A
5 mm 10 mm

## VM WKF...

| V | A |
|---|---|
| * | 10 |
| 65 V | 10 A |

9pole module L = 9 x 5 mm + 1.5 mm
18pole module L = 18 x 5 mm + 1.5 mm

| Type | Part no. | Std. pack. |
|---|---|---|
| WKF 1,5 KOE | 37.702.7753.0 | 50 |
| WKF 1,5 KOE-PGN | 37.702.8753.0 | 50 |
| 35x27x7,5 EN 60715 | 98.300.0000.0 | 1 |
| 35x24x15 EN 60715 | 98.360.0000.0 | 1 |
| 9708/2 S35 | Z5.522.8553.0 | 100 |
| WEF 1/35 | Z5.523.9353.0 | 100 |
| LEL 1,5/1 WEISS | 05.562.2453.0 | 100 |
| LEL 1,5/2 GRAU | 05.562.2553.0 | 100 |
| LEL 1,5/3 SCHWARZ | 05.562.2653.0 | 100 |
| DIN 5264 B 0,6x3,5 | 06.502.4000.0 | 5 |

| Type | Part no. | Std. pack. |
|---|---|---|
| WKF 1,5 KOA 2L | 37.702.7653.0 | 50 |
| WKF 1,5 KOA 2L/SL-PGE | 37.702.8653.0 | 50 |
| 35x27x7,5 EN 60715 | 98.300.0000.0 | 1 |
| 35x24x15 EN 60715 | 98.360.0000.0 | 1 |
| 9708/2 S35 | Z5.522.8553.0 | 100 |
| WEF 1/35 | Z5.523.9353.0 | 100 |
| LEL 1,5/1 WEISS | 05.562.2453.0 | 100 |
| LEL 1,5/2 GRAU | 05.562.2553.0 | 100 |
| LEL 1,5/3 SCHWARZ | 05.562.2653.0 | 100 |
| DIN 5264 B 0,6x3,5 | 06.502.4000.0 | 5 |

| Type | Part no. | Std. pack. |
|---|---|---|
| VM WKF KO..9 | 69.700.0953.0 | 10 |
| VM WKF KO..18 | 69.700.1853.0 | 5 |
| 35x27x7,5 EN 60715 | 98.300.0000.0 | 1 |
| 35x24x15 EN 60715 | 98.360.0000.0 | 1 |
| 9708/2 S35 | Z5.522.8553.0 | 100 |
| WEF 1/35 | Z5.523.9353.0 | 100 |
| AD VM-1,5/8 SCHWARZ | 04.343.8053.0 | 10 |

# Accessories for DIN rail terminal blocks with spring clamp connection, type *WKF*

fasis

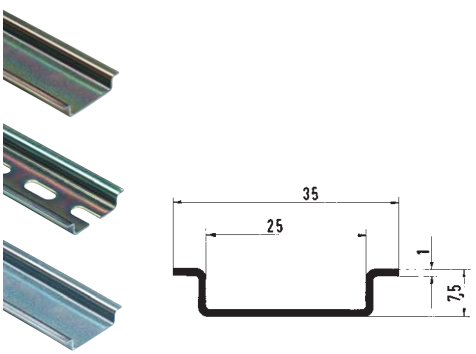


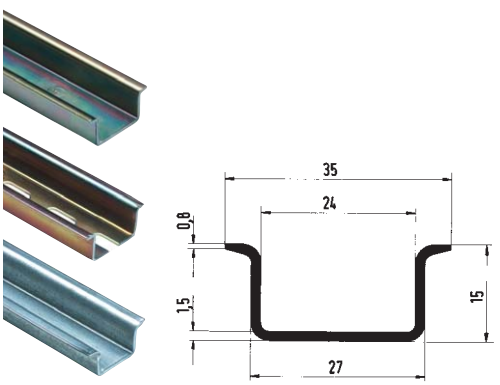


**Mounting Rail 35 x 7.5**
to standard DIN EN 60715

**Mounting Rail 35 x 15**
to standard DIN EN 60715

| | | | Type | Part no. | Std. pack. | Type | Part no. | Std. pack. |
|---|---|---|---|---|---|---|---|---|
| **Mounting Rail** | | | | | | | | |
| | | | | | | | | |
| 1. Steel zinc plated, dichromate | solid | L = 2 m | 35 x 27 x 7,5 EN 60715 | 98.300.0000.0 | 1 | 35 x 27 x 15 EN 60715 | 98.370.0000.0 | 1 |
| Steel zinc plated, dichromate | slotted | L = 2 m | 35 x 27 x 7,5 EN 60715 | 98.300.1000.0 | 1 | 35 x 27 x 15 EN 60715 | 98.370.1000.0 | 1 |
| 2. Steel, unplated | solid | L = 2 m | 35 x 27 x 7,5 EN 60715 | 98.300.0010.0 | | | | |
| Steel, unplated | slotted | L = 2 m | | | | | | |
| 3. Steel, zinc plated | solid | L = 2 m | | | | | | |
| Steel, zinc plated | slotted | L = 2 m | | | | | | |
| 4. Copper | solid | L = 2 m | | | | | | |
| Copper | slotted | L = 2 m | | | | | | |
| 5. Aluminum | solid | L = 2 m | 35 x 27 x 7,5 EN 60715 | 98.750.0000.0 | | | | |
| Aluminum | slotted | L = 2 m | 35 x 27 x 7,5 EN 60715 | 98.800.1000.0 | | | | |
| 6. Stainless steel | solid | L = 2 m | 35 x 27 x 7,5 EN 60715 | 98.330.0000.0 | | | | |
| | | | | | | | | |
| | | | | | | | | |
| | | | | | | | | |
| | | | | | | | | |
| | | | | | | | | |
| | | | | | | | | |
| **End clamp** | | | | | | | | |
| | | | | | | | | |
| 7. End clamp with screw for 35 mm rail | | 8 mm wide | | | | | | |
| 8. End clamp with screw for 35 mm rail | | | | | | | | |
| with marking plate | | 8/17.5 mm wide | | | | | | |
| 9. End clamp, screwless, for 35 mm rail | | 8 mm wide | | | | | | |
| 10. End clamp, screwless, for 35 mm rail | | | | | | | | |
| with marking plate | | 8/17.5 mm wide | | | | | | |
| for terminal rails | | | | | | | | |
| 11. Bus bar holder | | 8 mm wide | | | | | | |
| Busbar support, with screw | | 8 mm | | | | | | |
| 12. Clamping screw for mounting rail | | | | | | | | |
| 13. Optional label carrier | | | | | | | | |
| 14. Paper Markers in perforated sheet form | | | | | | | | |
| (1 sheet = 100 Marking tags) | | | | | | | | |

# fasis

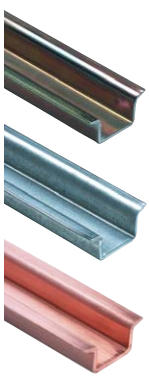

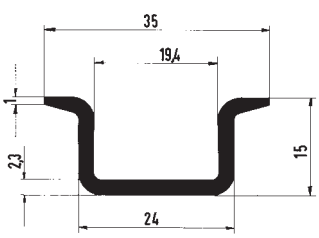

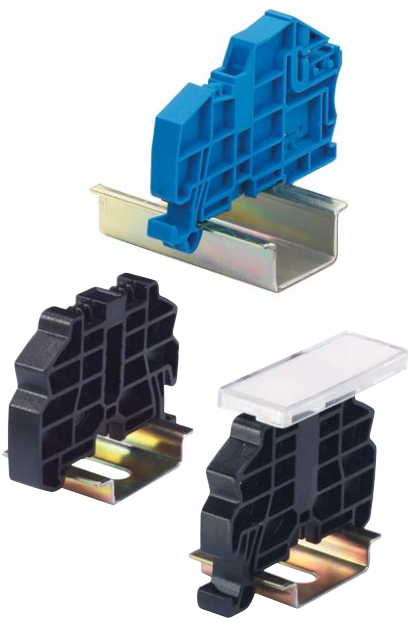

## Mounting Rail 35 x 15
to standard DIN EN 60715

| Type | Part no. | Std. pack. |
|---|---|---|
| 35 x 27 x 15 EN 60715 | 98.360.0000.0 | 1 |
| 35 x 27 x 15 EN 60715 ZN | 98.360.0004.0 | 1 |
| 35 x 27 x 15 EN 60715 CU | 98.380.0000.0 | 10 |

## End clamp for TS 35
with screw connection

| Type | Part no. | Std. pack. |
|---|---|---|
| 9708/2 S 35 | Z5.522.8553.0 | 100 |
| 9708/2 BS/35 | 69.920.0553.0 | 100 |
| | 04.019.0289.0 | 10 |

## End clamp for TS 35
screwless connection

| Type | Part no. | Std. pack. |
|---|---|---|
| WEF 1/35 | Z5.523.9353.0 | 100 |
| WEF 1 BS/35 | 69.920.1053.0 | 100 |
| WKIF SH/E/35 | Z1.108.8453.0 | 10 |
| | 69.920.1153.0 | |
| | 05.091.0200.0 | |
| BSIR | Z4.243.8453.0 | |
| | 04.019.0289.0 | 10 |

# Marking accessories for DIN rail terminal blocks

**fasis**

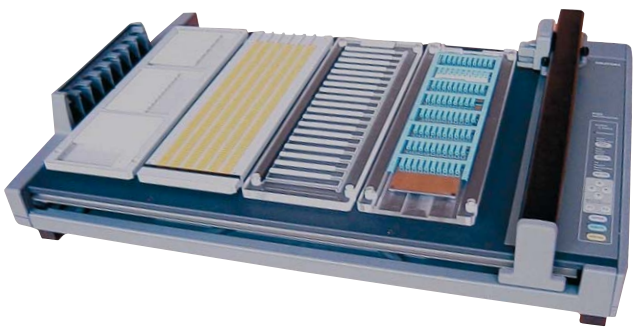

## *wiemarc*

| Type | Part no. | Std. pack |
|---|---|---|
| wiemarc CD | 95.502.0501.0 | |

**Discription**

***wiemarc*** is a Windows® based plotter software (Windows 95/98/ME/NT/XP) that is able to drive the following plotter systems:

– ***wieplot*** MUT (Mutoh system)
– Roland system
for custom printing on standard Wieland marking tags.

***wiemarc*** makes preparing data for custom printing easier and faster than ever.
Intuitive handling allows printing of marking tag cards in single, multipole and series marking jobs.
Import of marking data from Excel files, text files and CAD/CAE programs is possible.
***wiemarc*** data file management is user-friendly as printing data can be stored and found very easily in the file library.
***wiemarc*** knows several special characters for electrical marking.
***wiemarc*** is able to mark tags with upward or downward series, series steps can be chosen as well as leading or following characters. Multipole line printing is possible depending on tag size, number of digits and type size. Automatic adaptation of type size according to tag size and number of digits.

**Requirements:**
Pentium II PC or compatible, min. 200 MHz or higher, 64 MByte RAM, CD-ROM Drive, VGA Grafic Adaptor and Monitor

***wiemarc*** supports Windows 95®, Windows 98®, Windows 2000®, Windows NT®, Windows ME® and Windows XP® Professional.

## *wieplot* MUT

**Description**

***wieplot*** MUT is a plotter system that uses ***wiemarc*** to interface with a PC, allowing custom printing on standard Wieland marking tags. These standard marking tags provide circuit identification for Wieland DIN rail mount terminal blocks, rectangular multipole connectors and WEB/WEG electronic housings.

| | |
|---|---|
| **Resolution:** | 0.025 mm |
| **Accuracy:** | +/- 0.1 mm |
| **Power supply:** | 50/60 Hz, 180 – 264 V, 90 – 132 V<br>Automatic switch over from 110 V to 230 V |
| **Power rating:** | About 0.3 A for 220 V |
| **Approvals:** | UL-UL478 (REV .4)<br>CSA-22.2 No. 220 and VDE EN 60 950 |
| **Interference:** | FCC Class B<br>FCC Part 15 and VDE Class B |
| **Dimensions:** | 620 mm x 425 mm x 106.5 mm |
| **Weight:** | 6.4 kg |
| **Interfaces:** | RS-232 C and parallel (Centronics) |

| Type | Part no. | Std. pack |
|---|---|---|
| wieplot MUT | 95.502.0601.0 | |
| Standard template for all Wieland tags | 95.502.0621.0 | |

# fasis

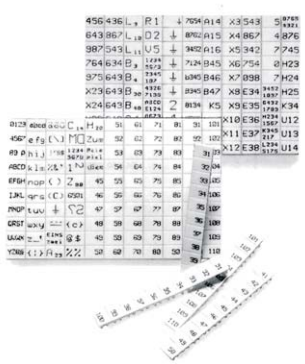

## Accessories

| | Type | Part no. | Std. pack |
|---|---|---|---|
| **Accessory kit** consists of plotter pen 0.25 mm, | | | |
| Ink-cartridge, permanent plotter pen 0.3 mm and | | | |
| cleaning set. | | | |
| Accessory kit (pen basic equipment) | | 95.502.0602.0 | |
| | | | |
| **Plotter pens for ROLAND and *wieplot*** MUT | | | |
| **systems:** | | | |
| Plotter pen 0.18 mm | | 95.502.0118.0 | |
| Plotter pen 0.25 mm | | 95.502.0125.0 | |
| Plotter pen 0.35 mm | | 95.502.0135.0 | |
| Plotter pen 0.50 mm | | 95.502.0150.0 | |
| Plotter pen 0.70 mm | | 95.502.0170.0 | |
| Plotter pen 1.00 mm | | 95.502.0100.0 | |
| | | | |
| **Permanent Plotter pen** | | | |
| 0.30 mm black | | 95.502.0230.0 | |
| 0.70 mm black | | 95.502.0270.0 | |
| | | | |
| **Permanent Plotter pen set** | | | |
| consisting of black, red, blue, green pen. | | | |
| set 0.30 mm | | 95.502.0234.0 | |
| set 0.70 mm | | 95.502.0274.0 | |
| | | | |
| **Hand pens** | | | |
| Hand pen 0.25 mm | | 95.502.0425.0 | |
| Hand pen 0.35 mm | | 95.502.0435.0 | |
| Hand pen 0.50 mm | | 95.502.0450.0 | |
| Hand pen 0.70 mm | | 95.502.0470.0 | |
| Ink cartridge P1.0 5 x 1 ml | | 95.502.0199.0 | |
| Cleaning set | | 95.502.0198.0 | |
| Pen cleaner | | 95.502.0197.0 | |
| | | | |
| ***wiemarc*-Templates for Wieland cards:** | | | |
| for updating existing plotter systems to ***wiemarc*** | | | |
| for ***marcom* 2000** and Phoenix CMS-System | | 95.502.0621.0 | |
| for Weidmueller M-Print (Mutoh IP 220) | | 95.502.0622.0 | |
| for murrplastic ACS (Roland DXY1150A) set high | | 95.502.0623.0 | |
| for Wago System and murrplastic ACS set low | | 95.502.0624.0 | |

| Type | Part no. | Std. pack |
|---|---|---|
| **Marker Cards:** | | |
| 110 tags per card | | |
| 9075 A/5/10/11 | Z4.242.5053.0 | |
| 60 tags per card | | |
| 9705 AL/5/10/6 | Z4.242.5153.0 | |
| 110 tags per card | | |
| 9705 A/6/10/11 | Z4.242.6053.0 | |
| 60 tags per card | | |
| 9705 AL/6/10/6 | Z4.242.6153.0 | |
| 84 tags per card | | |
| 9705 A/6.7/12/7 | Z4.242.6753.0* | |
| 36 tags per card | | |
| 9705 AL/6.7/12/7 | Z4.242.6853.0* | |
| *must use multi-card template | | |
| 9705 A/8/10/7 | Z4.242.8053.0* | |

| | 9075A/ 5/10/11 | 9075AL/ 5/10/6 | 9075A/ 6/10/11 | 9075AL/ 6/10/6 | 9075A/ 6.7/12/7 | 9075AL/ 6.7/12/7 | 9075A/ 8/10/7 |
|---|---|---|---|---|---|---|---|
| ***fasis*** | | | | | | | |
| WKF 2.5 ... | X | X | | | | | |
| WKF 4 ... | | | X | X | | | |
| WKF 6 ... | | | | | X | X* | X |
| WKF 10 ... | X* | X* | | | | | |
| WKF 16 ... | | | X* | X* | | | |
| WKMF 2.5 ... | X | X | | | | | |
| ***taris*** | | | | | | | |
| WKC 1 ... | X | X | | | | | |
| WKC 2.5 ... | | | X | X | | | |
| ***selos*** | | | | | | | |
| WK 2.5 ... | X | X | | | | | |
| WK 4 ... | | | X | X | | | |
| WK 6 ... | | | | | X+ | X+ | X |
| WKN 10 ... | X* | X* | | | | | |
| WKN 16 ... | | | X* | X* | | | |
| WKN 35 ... | | | | | X+ | X+ | X* |
| WKN 70 ... | | | | | X+ | X+ | |
| WKM 2.5 ... | X | X | | | | | |
| WKM 4 ... | | | X | X | | | |
| 9220 A/6 | | | X | X | | | |
| 9700 A/5 | X | X | | | | | |
| 9700 A/6 | | | X | X | | | |
| 9700 A/8 | | | | | X+ | X+ | X |
| 9700 A/10 | X* | X* | | | | | |
| 9700 A/12 | | | X* | X* | | | |
| 9700 A/16 | | | | | X+ | X+ | |

* 2 strips needed for 10 terminals
\+ markers must be mounted individually
**Note:** the AL-markers are 69% longer that the A-markers
AL/6.7 is twice as long to allow more printing area

# Terminal blocks for electrical installations type *WKI*

## *fasis* BIT

fasis

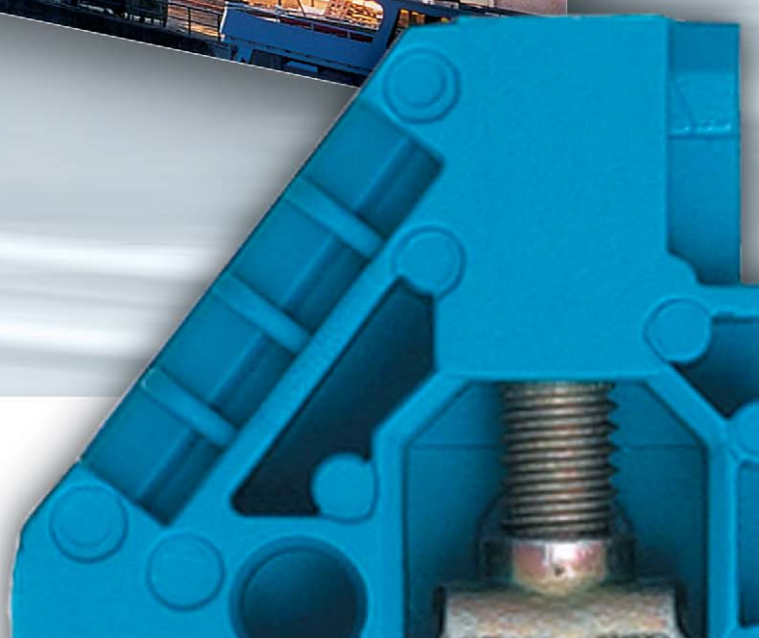

# Terminal Blocks

**for Electrical Installations, Type *WKI***

# Terminal blocks with spring connection for junction boxes

# *fasis* BIT

## Terminal blocks for electrical installations 2.5 mm²
(12 AWG)

D | D-D | D-D-SL | N-D-SL | NT-D-SL

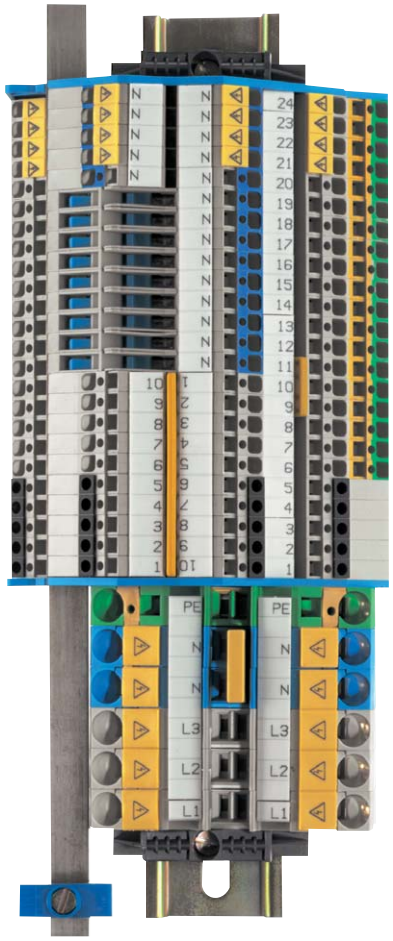

## Standard terminal blocks

| | 4 mm² (10 AWG) | 10 mm² (6 AWG) | 16 mm² (4 AWG) |
|---|---|---|---|
| Feed-through blocks | | | |
| Neutral disconnect blocks | 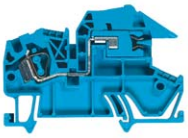 | | 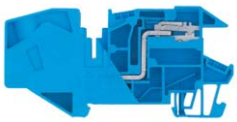 |
| Ground blocks | | | |

# Terminal blocks with screw connection for junction boxes

# selos BIT

## Terminal blocks for electrical installations

**4 mm²**
(10 AWG)

DU

D-D

D-D-SL

N-D-SL

NT-D-SL

NTN-D-SL

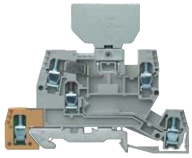
TKG-D-SL

| | 4 mm² (10 AWG) | 10 mm² (6 AWG) | 16 mm² (4 AWG) | 35 mm² (2 AWG) |
|---|---|---|---|---|
| Feed-through blocks | | | | |
| Neutral terminal blocks | | | | |
| Ground blocks | | | | |

## Standard terminal blocks

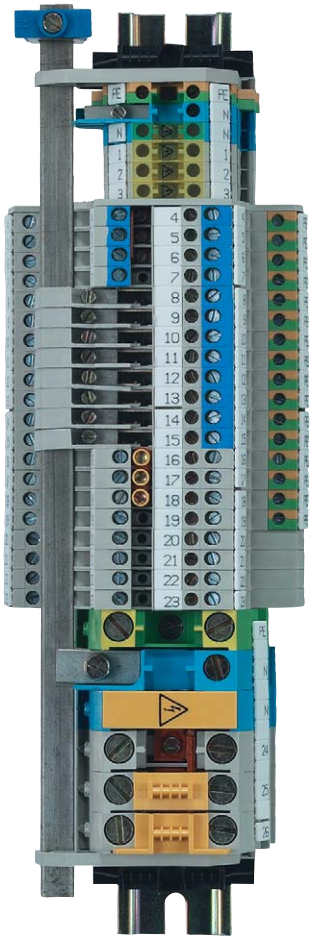

## PEN assembly blocks

| 10 mm² (6 AWG) | 16 mm² (4 AWG) | 35 mm² (2 AWG) |
|---|---|---|
| | | |

# Terminal blocks for electrical installations with spring connection, type *WKIF*

## *fasis* BIT

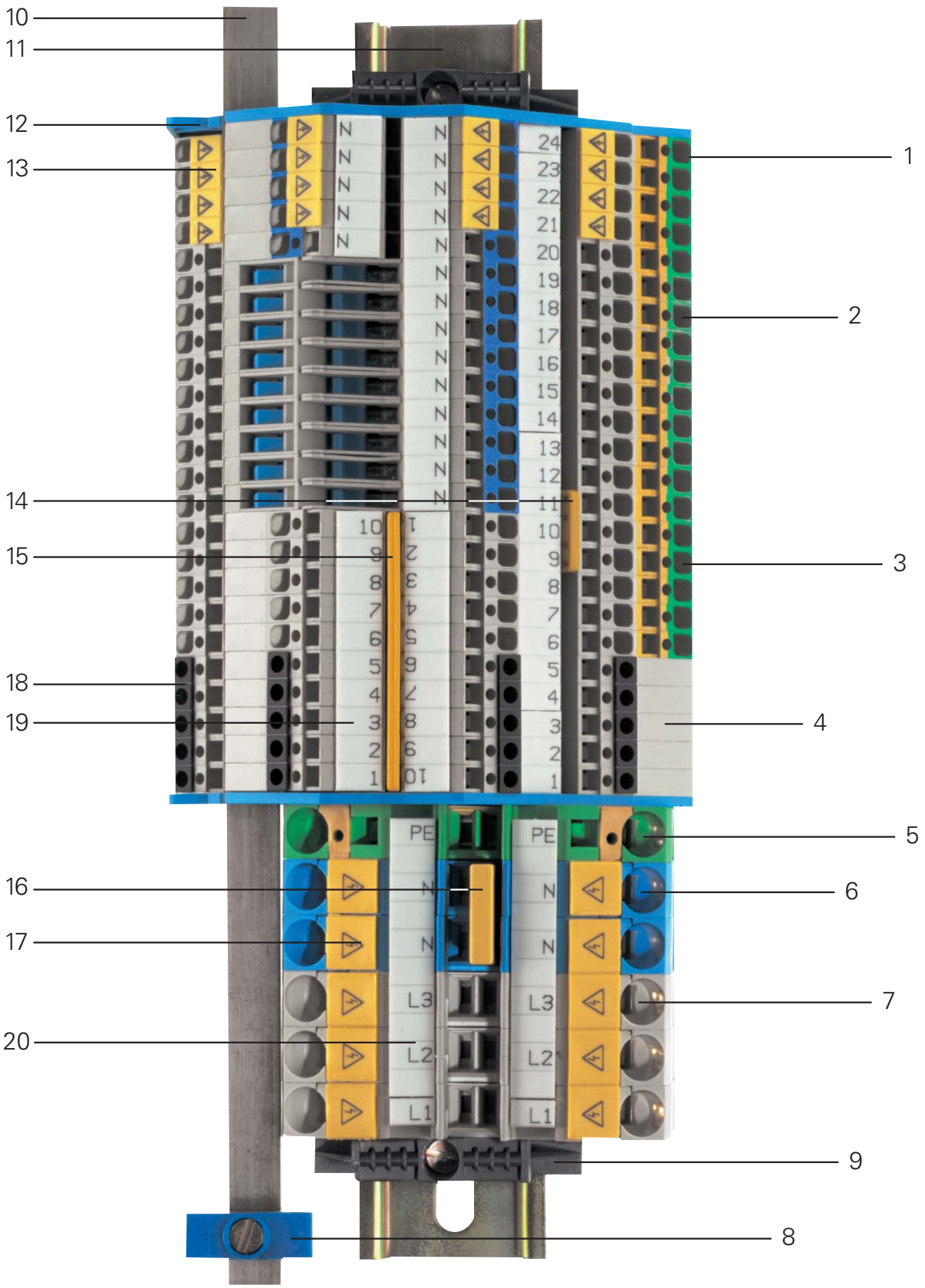

# fasis

| Item | Description | Type | Part number |
|---|---|---|---|
| 1 | Installation blocks | WKIF 2.5 N-D-SL | 56.703.9453.0 |
| 2 | Installation blocks | WKIF 2.5 NT-D-SL | 56.703.9553.0 |
| 3 | Installation blocks | WKIF 2.5 D-D-SL | 56.703.9853.0 |
| 4 | Installation blocks | WKIF 2.5 D-D | 56.703.9753.0 |
| 5 | Ground block | WKF 10 SL/35 | 56.710.9053.0 |
| 6 | Feed through block | WKF 10/35 BLAU | 56.710.0053.6 |
| 7 | Feed through block | WKF 10/35 | 56.710.0053.0 |
| 8 | Connector clamp | WAK 16/2 BLAU | 30.494.3021.6 |
| 9 | End clamp | 9708/2 S35 | Z5.522.8553.0 |
| 10 | Busbar 10 x 3 | 9813 M Sn | 98.290.1000.0 |
| 11 | Mounting rail | 35 x 27 x 7.5 | 98.300.0000.0 |
| 12 | Busbar support | WKIF/SH/35 | 01.108.7653.0 |
| 13 | Cover with warning symbol | ADF 2.5/4 GELB | 04.343.6053.8 |
| 14 | Cross connector, insulated | IVB WKF 2.5–3 | Z7.280.6327.0 |
| 15 | Cross connector, insulated | IVB WKF 2.5–10 | Z7.280.7027.0 |
| 16 | Cross connector, insulated | IVB WKF 10–2 | Z7.283.8227.0 |
| 17 | Cover with warning symbol | ADF 10/4 GELB | 04.343.6453.8 |
| 18 | Wire entry guide | LEL 2.5/3 SCHWARZ | 05.561.6753.0 |
| 19 | Marking strips * | 9705 A/5/10 B | 04.842.5053.0 |
| 20 | Marking strips * | 9705 A/5/10/5 B | 04.842.5553.0 |

*Custom marking upon request

# Terminal blocks for electrical installations with spring connection, type *WKIF*

# *fasis* BIT

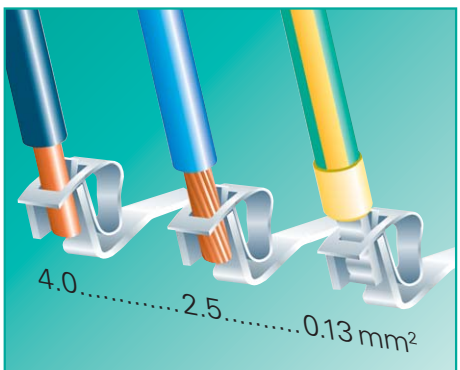


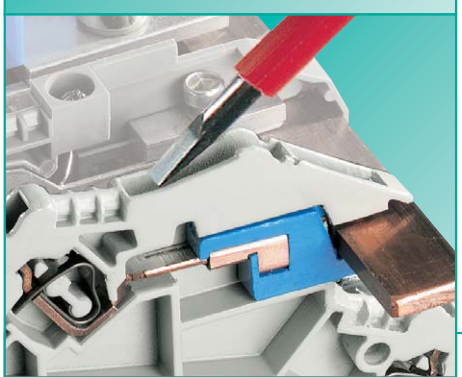

**WKIF provides ...**

❒ Very convenient operation due to screw-less spring connection

❒ Small package in a three-tier design

❒ Screwless neutral conductor disconnect

**Application advantages**

→ The TOP connection technique enables easy and safe wiring according to EN 60947-7-1 even in narrow spaces which are difficult to access

→ High density as the installation blocks are only 5mm wide

→ Suited for small junction boxes with cover according to DIN 43871

→ Maintenance-friendly design for after-sales service and inspection

→ Blue indicator shows the state of the neutral circuit

→ Fast and safe disconnection of the neutral conductor with WKIF 2.5 NT-D-SL

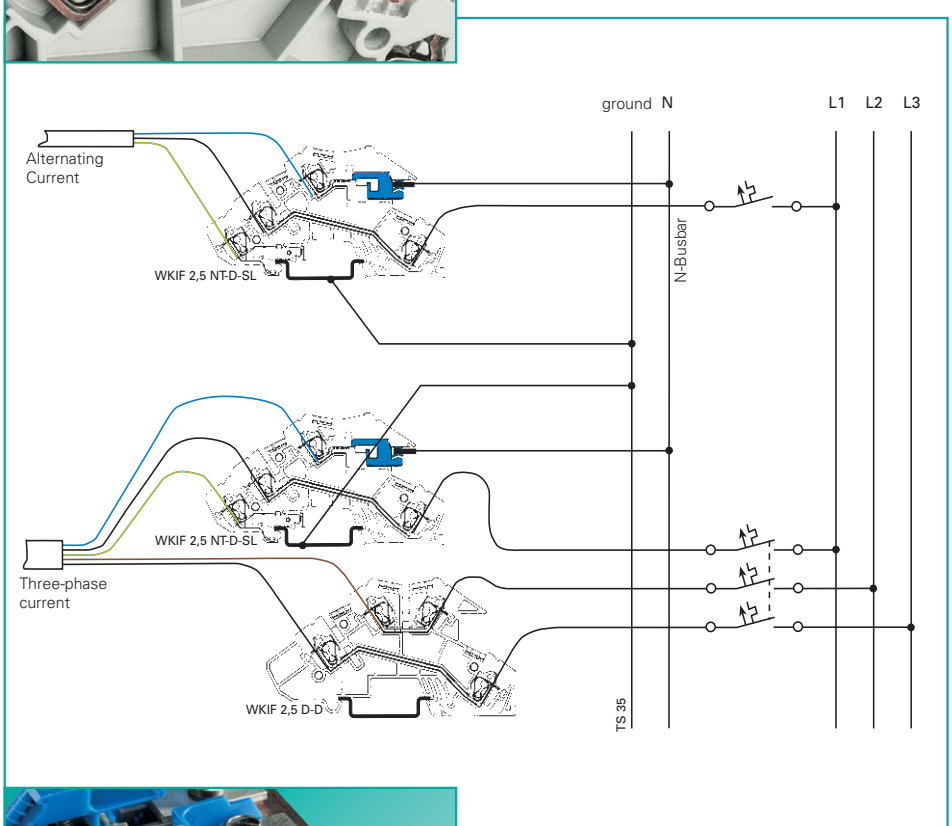


❒ ***fasis*** BIT is designed to meet the wiring and installation requirements of distribution systems in commercial and institutional buildings (such as hospitals, schools, shopping malls, theaters, office buildings, airports) according to VDE 0100 (IEC 60364) and standard control requirements.

❒ WKIF 2.5 NT-D-SL allows the required circuit isolation test without disconnecting the neutral conductor

❒ WKIF offers installation terminal blocks in
5 versions:

WKIF 2.5 D
WKIF 2.5 D-D
WKIF 2.5 D-D-SL
WKIF 2.5 N-D-SL
WKIF 2.5 NT-D-SL

❒ other applications include control wiring. For example, analog signal (+, –, shield) all in one terminal block.

❒ Connection slot on the terminal block for the neutral busbar.

→ The terminal blocks for electrical installations of the WKIF series in the NT version can be combined with ...

...the terminal blocks of the WKI series (screw connection style)

...the neutral disconnect blocks (ETK) of the WKN series (screw connection style)

# fasis

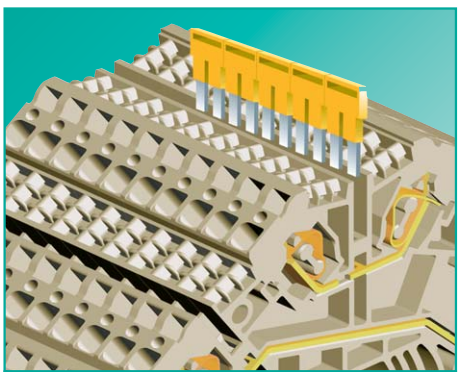

## Cross connection

- ❒ Jumpering with insulated cross connector **IVB** WKF 2.5...
- ❒ No partition plates required between adjacent cross connectors
- ❒ Cross connectors **IVB** WKF 2.5... are rated for the same current as the terminal block

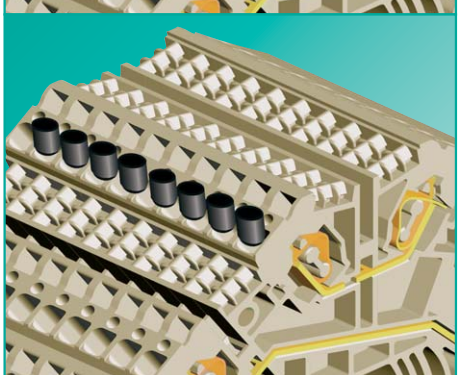

## Wire entry guide

- ❒ Wire entry guides **LEL** are recommended when connecting wires with cross sections below 1 $mm^2$ or 18 AWG
- ❒ Wire entry guides **LEL** prevent the wires from being inserted beyond optimal clamping position and therefore guarantee safe connection

## Marking facilities

- ❒ Marking facility is down the center so that the marking tag is not covered by the conductor
- ❒ Tear-off marking strips for 3-digit marking facilities per block
- ❒ Single marking tags in 5 mm spacing
- ❒ Marking strips (10 individual marking tags) to snap on to 10 terminal blocks
- ❒ Custom marking upon request

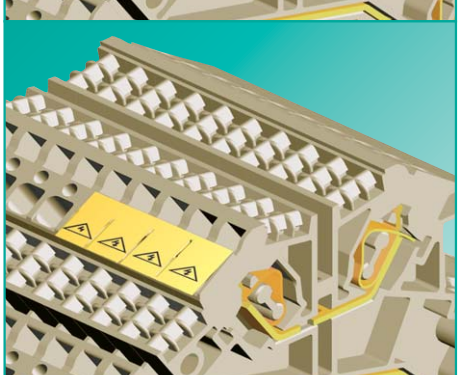

## Cover with warning symbol

- ❒ Cover with warning symbol **ADC** to snap on to blocks which remain live when the main switch is disconnected (VDE 0113)
- ❒ Can only be removed with a screwdriver

## DQS certificates for all company divisions

- ❒ Quality standard as per DIN ISO 9001 in development, production and assembly
- ❒ Continued control of the quality standard by means of regular internal and external quality audits
- ❒ Compatible with certificates of other countries:
  - BSI Certificate, Great Britain
  - SQS Certificate, Switzerland
  - Aib-Vincotte Certificate, Belgium
  - ÖQS Certificate, Austria

## Material

- ❒ Metal parts

  Special alloys enable a low contact resistance and provide a gas-tight contact area

  Clamping spring: stainless CrNi steel

  Current carrying bar: tin-plated copper

- ❒ Insulation material

  Polyamide has excellent electrical, chemical and mechanical characteristics

  Insulating housings: Polyamide 66/6

  Tracking current resistance: CTI 600

  Flammability class: UL 94-V0

  (also see master catalog section ***facts*** & DATA)

You can use our ***wieplan*** software to configure your own terminal block assemblies (see page 10/11).

**Note:**

The information regarding cross sectional area and connection types pertains to unprepared wires without ferrules.

The voltage ratings apply to the terminals in their intended application. When different products are mounted adjacent to each other, the proper isolation distances must be adhered to. For this purpose, **Wieland** offers a large selection of appropriate accessories.

A detailed description of technical data, the standards' requirements, and the application conditions can be found in part catalog section ***facts*** & DATA: "Technical information".

# Terminal blocks for electrical installations, type *WKIF*

**fasis** BIT

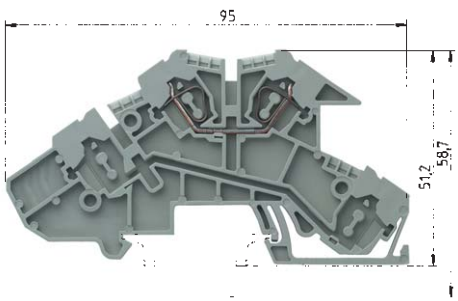


Upper tier equipped only!
D – line feedthrough, upper tier

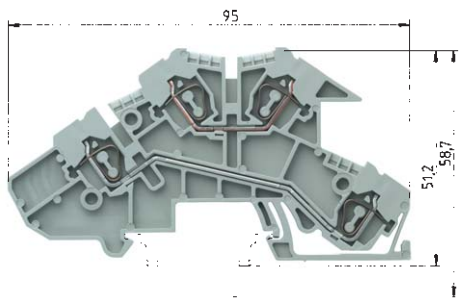


D – line feedthrough
D – line feedthrough

| | | WKIF 2.5 D | | | WKIF 2.5 D-D | | |
|---|---|---|---|---|---|---|---|
| | | fine stranded | solid | V | fine stranded | solid | V |
| EN 60947-7-1/DIN VDE 0611 T1 | | 0.13 – 2.5 mm² | 0.13 – 4 mm² | 400 V/6 kV/3 | 0.13 – 2.5 mm² | 0.13 – 4 mm² | 400 V/6 kV/3 |
| UL ratings | field/factory wiring | UL | | | UL | | |
| CSA ratings | | No. 22-12 AWG | | 300 V | No. 22-12 AWG | | 300 V |
| Width | Wire strip length | 5 mm | | 11 mm | 5 mm | | 11 mm |
| Approvals | | | | | | | |

| | | Type | Part no. | Std. pack | Type | Part no. | Std. pack |
|---|---|---|---|---|---|---|---|
| **Installation block** | Color: gray | WKIF 2,5 D | 56.703.9653.0 | 50 | WKIF 2,5 D-D | 56.703.9753.0 | 50 |
| | | | | | | | |
| **Accessories** | | | | | | | |
| 1. Mounting rail TS 35, DIN rail 7.5mm high | L = 2 m | 35 x 27 x 7,5 EN 60715 | 98.300.0000.0 | 1 | 35 x 27 x 7,5 EN 60715 | 98.300.0000.0 | 1 |
| Mounting rail TS 35, DIN rail 15mm high | L = 2 m | 35 x 24 x 15 EN 60715 | 98.360.0000.0 | 1 | 35 x 24 x 15 EN 60715 | 98.360.0000.0 | 1 |
| 2. End clamp for TS 35, with screw | 8 mm wide | 9708/2 S35 | Z5.522.8553.0 | 100 | 9708/2 S35 | Z5.522.8553.0 | 100 |
| End clamp for TS 35, without screws | 8 mm wide | WEF 1/35 | Z5.523.9353.0 | 100 | WEF 1/35 | Z5.523.9353.0 | 100 |
| 3. End plate | 1.5 mm wide | APIF 2,5 | 07.311.8353.0 | 10 | APIF 2,5 | 07.311.8353.0 | 10 |
| 4. Cross connector, insulated jumper bar | 2pole | IVB WKF 2,5-2 | Z7.280.6227.0 | 10 | IVB WKF 2,5-2 | Z7.280.6227.0 | 10 |
| | 3pole | IVB WKF 2,5-3 | Z7.280.6327.0 | 10 | IVB WKF 2,5-3 | Z7.280.6327.0 | 10 |
| | 4pole | IVB WKF 2,5-4 | Z7.280.6427.0 | 10 | IVB WKF 2,5-4 | Z7.280.6427.0 | 10 |
| | 5pole | IVB WKF 2,5-5 | Z7.280.6527.0 | 10 | IVB WKF 2,5-5 | Z7.280.6527.0 | 10 |
| | 6pole | IVB WKF 2,5-6 | Z7.280.6627.0 | 10 | IVB WKF 2,5-6 | Z7.280.6627.0 | 10 |
| | 7pole | IVB WKF 2,5-7 | Z7.280.6727.0 | 20 | IVB WKF 2,5-7 | Z7.280.6727.0 | 20 |
| | 8pole | IVB WKF 2,5-8 | Z7.280.6827.0 | 20 | IVB WKF 2,5-8 | Z7.280.6827.0 | 20 |
| | 9pole | IVB WKF 2,5-9 | Z7.280.6927.0 | 20 | IVB WKF 2,5-9 | Z7.280.6927.0 | 20 |
| | 10pole* | IVB WKF 2,5-10 | Z7.280.7027.0 | 20 | IVB WKF 2,5-10 | Z7.280.7027.0 | 20 |
| 5. Wire entry guide | 0.13 – 0.2 mm² | LEL 2,5/1 WEISS | 05.561.6553.0 | 100 | LEL 2,5/1 WEISS | 05.561.6553.0 | 100 |
| | 0.25 – 0.5 mm² | LEL 2,5/2 GRAU | 05.561.6653.0 | 100 | LEL 2,5/2 GRAU | 05.561.6653.0 | 100 |
| | 0.75 – 1.0 mm² | LEL 2,5/3 SCHWARZ | 05.561.6753.0 | 100 | LEL 2,5/3 SCHWARZ | 05.561.6753.0 | 100 |
| 6. Cover with warning symbol over 4 blocks | | ADF 2,5/4 GELB | 04.343.6053.8 | 10 | ADF 2,5/4 GELB | 04.343.6053.8 | 10 |
| 7. Busbar, E-Cu 10 x 3 mm, tin-plated | L = 1 m | 9813 M Sn | 98.290.1000.0 | 1 | 9813 M Sn | 98.290.1000.0 | 1 |
| 8. Connector clamp for busbar | | | | | | | |
| 16 mm² | 8.5 mm wide | WAK 16/2 BLAU | 30.494.3021.6 | 100 | WAK 16/2 BLAU | 30.494.3021.6 | 100 |
| 35 mm² | 17 mm wide | WAK 35/2 | 30.494.4121.0 | 50 | WAK 35/2 | 30.494.4121.0 | 50 |
| 9. Busbar support | 2 mm wide | WKIF/SH/35 | 01.108.7653.0 | 10 | WKIF/SH/35 | 01.108.7653.0 | 10 |
| Busbar support, as end clamp | 8 mm wide | WKIF SH/E/35 | Z1.108.8453.0 | 10 | WKIF SH/E/35 | Z1.108.8453.0 | 10 |
| 10. Screwdriver, uninsulated | | DIN 5264 B 0,6 x 3,5 | 06.502.4000.0 | 5 | DIN 5264 B 0,6 x 3,5 | 06.502.4000.0 | 5 |

Marking accessories see page 48/49 and page 90/91

*Available up to 20 poles

# fasis

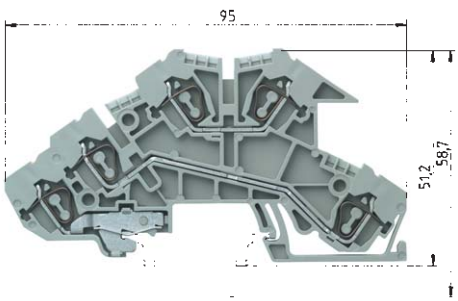


D – line feedthrough
D – line feedthrough
SL – ground

## WKIF 2.5 D-D-SL

| | | | |
|---|---|---|---|
| fine stranded | solid | V | A |
| 0.13 – 2.5 mm² | 0.13 – 4 mm² | 400 V/250 V/4 kV/3 | 24 |
| UL | | | |
| No. 22-12 AWG | | 300 V | 20 |
| 5 mm | | | 11 mm |

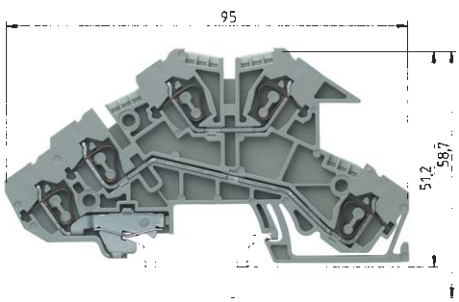


D – line feedthrough
N – neutral feedthrough
SL – ground

## WKIF 2.5 N-D-SL

| | | | |
|---|---|---|---|
| fine stranded | solid | V | A |
| 0.13 – 2.5 mm² | 0.13 – 4 mm² | 400 V/250 V/4 kV/3 | 24 |
| UL | | | |
| No. 22-12 AWG | | 300 V | 20 |
| 5 mm | | | 11 mm |

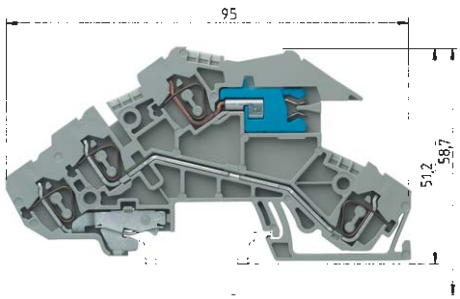


D – line feedthrough
NT – neutral feedthrough, disconnectable
SL – ground

## WKIF 2.5 NT-D-SL

| | | | |
|---|---|---|---|
| fine stranded | solid | V | A |
| 0.13 – 2.5 mm² | 0.13 – 4 mm² | 400 V/250 V/6 kV/3 | 20 |
| UL | | | |
| No. 22-12 AWG | | 300 V | 20 |
| 5 mm | | | 11 mm |

| Type | Part no. | Std. pack |
|---|---|---|
| WKIF 2,5 D-D-SL | 56.703.9853.0 | 50 |
| | | |
| | | |
| 35 x 27 x 7,5 EN 60715 | 98.300.0000.0 | 1 |
| 35 x 24 x 15 EN 60715 | 98.360.0000.0 | 1 |
| 9708/2 S35 | Z5.522.8553.0 | 100 |
| WEF 1/35 | Z5.523.9353.0 | 100 |
| APIF 2,5 | 07.311.8353.0 | 10 |
| IVB WKF 2,5-2 | Z7.280.6227.0 | 10 |
| IVB WKF 2,5-3 | Z7.280.6327.0 | 10 |
| IVB WKF 2,5-4 | Z7.280.6427.0 | 10 |
| IVB WKF 2,5-5 | Z7.280.6527.0 | 10 |
| IVB WKF 2,5-6 | Z7.280.6627.0 | 10 |
| IVB WKF 2,5-7 | Z7.280.6727.0 | 20 |
| IVB WKF 2,5-8 | Z7.280.6827.0 | 20 |
| IVB WKF 2,5-9 | Z7.280.6927.0 | 20 |
| IVB WKF 2,5-10 | Z7.280.7027.0 | 20 |
| LEL 2,5/1 WEISS | 05.561.6553.0 | 100 |
| LEL 2,5/2 GRAU | 05.561.6653.0 | 100 |
| LEL 2,5/3 SCHWARZ | 05.561.6753.0 | 100 |
| ADF 2,5/4 GELB | 04.343.6053.8 | 10 |
| 9813 M Sn | 98.290.1000.0 | 1 |
| | | |
| WAK 16/2 BLAU | 30.494.3021.6 | 100 |
| WAK 35/2 | 30.494.4121.0 | 50 |
| WKIF/SH/35 | 01.108.7653.0 | 10 |
| WKIF SH/E/35 | Z1.108.8453.0 | 10 |
| DIN 5264 B 0,6 x 3,5 | 06.502.4000.0 | 5 |

| Type | Part no. | Std. pack |
|---|---|---|
| WKIF 2,5 N-D-SL | 56.703.9453.0 | 50 |
| | | |
| | | |
| 35 x 27 x 7,5 EN 60715 | 98.300.0000.0 | 1 |
| 35 x 24 x 15 EN 60715 | 98.360.0000.0 | 1 |
| 9708/2 S35 | Z5.522.8553.0 | 100 |
| WEF 1/35 | Z5.523.9353.0 | 100 |
| APIF 2,5 | 07.311.8353.0 | 10 |
| IVB WKF 2,5-2 | Z7.280.6227.0 | 10 |
| IVB WKF 2,5-3 | Z7.280.6327.0 | 10 |
| IVB WKF 2,5-4 | Z7.280.6427.0 | 10 |
| IVB WKF 2,5-5 | Z7.280.6527.0 | 10 |
| IVB WKF 2,5-6 | Z7.280.6627.0 | 10 |
| IVB WKF 2,5-7 | Z7.280.6727.0 | 20 |
| IVB WKF 2,5-8 | Z7.280.6827.0 | 20 |
| IVB WKF 2,5-9 | Z7.280.6927.0 | 20 |
| IVB WKF 2,5-10 | Z7.280.7027.0 | 20 |
| LEL 2,5/1 WEISS | 05.561.6553.0 | 100 |
| LEL 2,5/2 GRAU | 05.561.6653.0 | 100 |
| LEL 2,5/3 SCHWARZ | 05.561.6753.0 | 100 |
| ADF 2,5/4 GELB | 04.343.6053.8 | 10 |
| 9813 M Sn | 98.290.1000.0 | 1 |
| | | |
| WAK 16/2 BLAU | 30.494.3021.6 | 100 |
| WAK 35/2 | 30.494.4121.0 | 50 |
| WKIF/SH/35 | 01.108.7653.0 | 10 |
| WKIF SH/E/35 | Z1.108.8453.0 | 10 |
| DIN 5264 B 0,6 x 3,5 | 06.502.4000.0 | 5 |

| Type | Part no. | Std. pack |
|---|---|---|
| WKIF 2,5 NT-D-SL | 56.703.9553.0 | 50 |
| | | |
| | | |
| 35 x 27 x 7,5 EN 60715 | 98.300.0000.0 | 1 |
| 35 x 24 x 15 EN 60715 | 98.360.0000.0 | 1 |
| 9708/2 S35 | Z5.522.8553.0 | 100 |
| WEF 1/35 | Z5.523.9353.0 | 100 |
| APIF 2,5 | 07.311.8353.0 | 10 |
| IVB WKF 2,5-2 | Z7.280.6227.0 | 10 |
| IVB WKF 2,5-3 | Z7.280.6327.0 | 10 |
| IVB WKF 2,5-4 | Z7.280.6427.0 | 10 |
| IVB WKF 2,5-5 | Z7.280.6527.0 | 10 |
| IVB WKF 2,5-6 | Z7.280.6627.0 | 10 |
| IVB WKF 2,5-7 | Z7.280.6727.0 | 20 |
| IVB WKF 2,5-8 | Z7.280.6827.0 | 20 |
| IVB WKF 2,5-9 | Z7.280.6927.0 | 20 |
| IVB WKF 2,5-10 | Z7.280.7027.0 | 20 |
| LEL 2,5/1 WEISS | 05.561.6553.0 | 100 |
| LEL 2,5/2 GRAU | 05.561.6653.0 | 100 |
| LEL 2,5/3 SCHWARZ | 05.561.6753.0 | 100 |
| ADF 2,5/4 GELB | 04.343.6053.8 | 10 |
| 9813 M Sn | 98.290.1000.0 | 1 |
| | | |
| WAK 16/2 BLAU | 30.494.3021.6 | 100 |
| WAK 35/2 | 30.494.4121.0 | 50 |
| WKIF/SH/35 | 01.108.7653.0 | 10 |
| WKIF SH/E/35 | Z1.108.8453.0 | 10 |
| DIN 5264 B 0,6 x 3,5 | 06.502.4000.0 | 5 |

# DIN rail terminal blocks with spring connection, type *WKF*

## *fasis* BIT

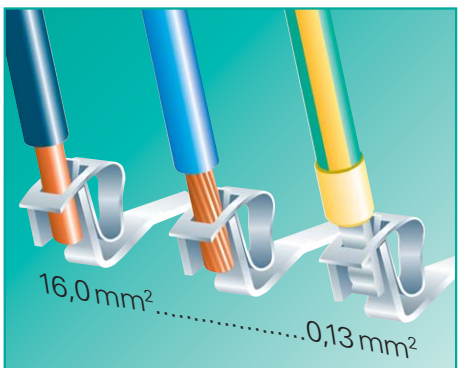


**WKF provides ...**

❒ **Spring connection technology –** screwless connection

Separation of electrical and mechanical functions

**Application advantages**

→ **Dynamic terminal connection**
Balances the cold flow properties of the connection

→ **Personnel cannot influence the clamping force** (no torque specs)
The clamping force required to connect a certain conductor, is determined by the spring element at the clamp

→ **Secure and maintenance-free electrical connection**
according to EN 60947-7-1

❒ **TOP connection**
Wire entry and operation in same plane

→ **Clear wiring in difficult** and confined wiring applications

❒ **Testing capabilities**

→ **Testing is possible on all** termination points by means of test plugs of up to 2.3 mm in diameter without having to disconnect the wires

❒ **Neutral conductor disconnect function**

→ **Screwless disconnect unit**
Easy and safe disconnection of the neutral circuit with visual display of the circuit state

❒ **Economic system**

→ **Time-saving due to pluggable accessories**

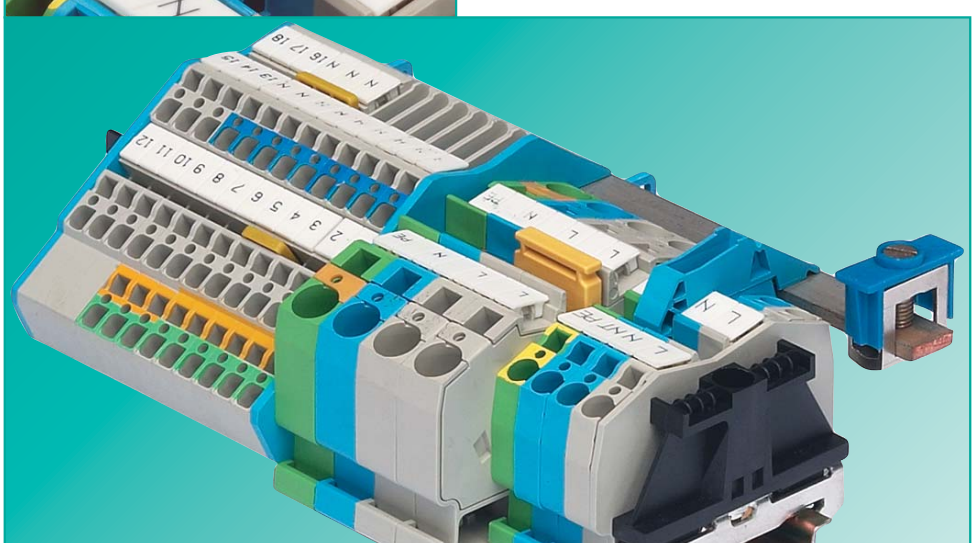

❒ ***fasis*** BIT is designed to meet the wiring and connection requirements of distribution systems in commercial and institutional buildings (such as hospitals, schools, shopping malls, theaters, office buildigns, airports) according to IEC 60364

❒ The neutral disconnect blocks of the WKIF/WKF series enable the required circuit isolation test without disconnecting the neutral conductor

❒ ***fasis*** BIT is suited for small junction boxes with cover according to DIN 43871

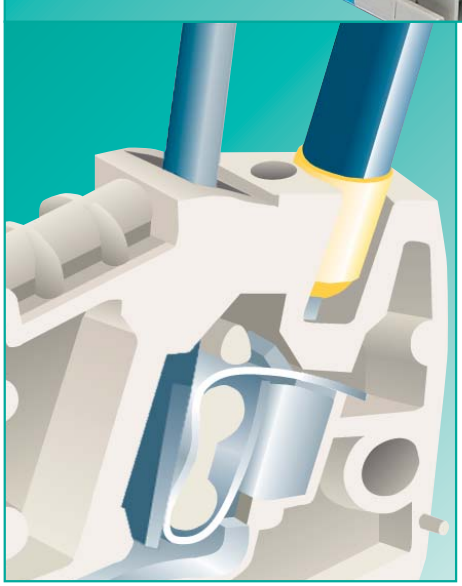

❒ **Connection capabilities**

The clamping bodies of the WKF series can take in any copper conductor types without ferrules

Due to the construction of the funnelled wire entry, stripped wires can be connected without causing wire splitting, provided that they are used in the proper way

→ Both solid and stranded wires with and without ferrules can be connected to the WKF terminal blocks

❒ **Tool**

For an optimal operation of our terminal blocks with spring connection we recommend to use the following DIN 5264 screwdrivers

i.e. cylinder-shaped screwdrivers with wedge-shaped blades

→

| Rated cross section | | Blade dimensions of the screwdrivers |
|---|---|---|
| 12 AWG | 2.5 mm² | 0.6 x 3.5 mm |
| 10 AWG | 4 mm² | 0.6 x 3.5 mm |
| 6 AWG | 10 mm² | 0.8 x 4.0 mm |
| | 16 mm² | 1.0 x 5.5 mm |

# fasis

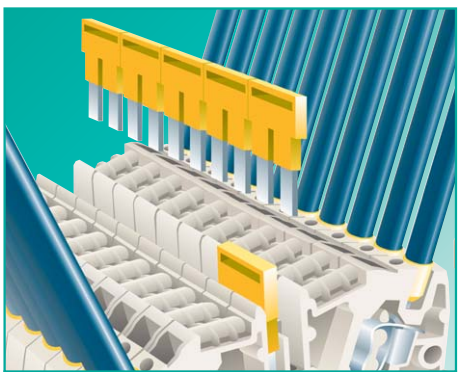

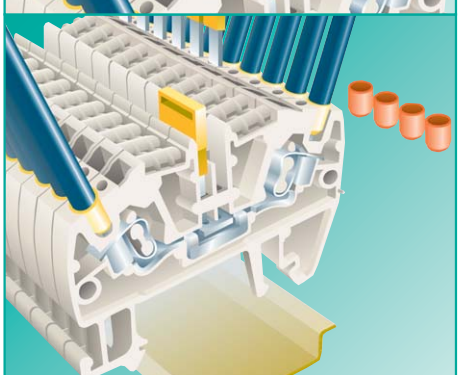

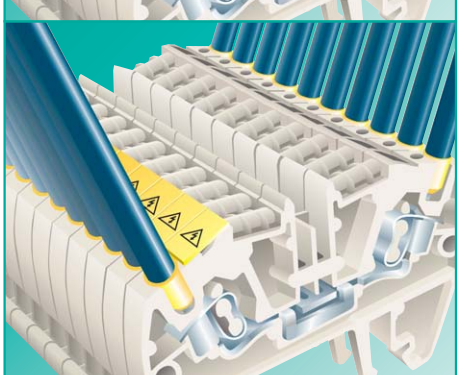

### Cross connection

- ❒ The insulated jumper bars **IVB** WKF... are completely touchproof
- ❒ Partition plates are therefore not required between adjacent jumper bars of different potentials
- ❒ The insulated jumper bars **IVB** WKF... carry the same rated current as the corresponding feed through terminal block

### Wire entry guides

- ❒ Wire entry guides LEL are recommended when connecting wires with cross sections below 1 mm² or 18 AWG
- ❒ Wire entry guides **LEL** keep the wires from being inserted too far and therefore guarantee safe connection

### Marking facilities

- ❒ Marking facility is down the center so that the marking tag is not covered by the conductor
- ❒ Individual marking tag in 5mm spacing
- ❒ Snap-on marking strips (10 individual marking tags) for terminal block assemblies
- ❒ Tear-off marking strips for 3-digit marking facilities per block
- ❒ Custom marking upon request

### Cover with warning symbol

- ❒ Cover with warning symbol **ADC** to snap on to blocks which remain live when the main switch is disconnected (VDE 0113)
- ❒ The cover can only be removed with a screwdriver

### DQS certificates for all companydivisions

- ❒ Quality standard as per DIN ISO 9001in development, production and assembly
- ❒ Continued control of the quality standard by means of regular internal and external quality audits
- ❒ Compatible with certificates of other countries:
  - BSI Certificate, Great Britain
  - SQS Certificate, Switzerland
  - Aib-Vincotte Certificate, Belgium
  - ÖQS Certificate, Austria

### Material

❒ Metal parts

Special alloys enable a low contact resistance and provide a gas-tight contact area

Clamping spring: stainless CrNi steel

Current carrying bar: tin-plated copper

❒ Insulation material

Polyamide has excellent electrical, chemical and mechanical characteristics

Insulating housings: Polyamide 66/6

Tracking current resistance: CTI 600

Flammability class:

| | |
|---|---|
| WKF 4... | UL 94-V0 |
| WKF 10... | UL 94-V0 |
| WKIF 16... | UL 94-V2 |

(also see master catalog section ***facts*** & DATA)

You can use our ***wieplan*** software to configure your own terminal block assemblies (see page 10/11).

**Note:**

The information regarding cross sectional area and connection types pertains to unprepared wires without ferrules.
Ferrules are not required for safe connection!

The voltage ratings apply to the terminals in their intended application. When different products are mounted adjacent to each other, the proper isolation distances must be adhered to, **For this purpose, Wieland** offers a large selection of appropriate accessories.

If the ground blocks of the WKF series are not used in block assemblies, but are mounted to the rail as single terminal blocks, end brackets have to be used.

A detailed description of technical data, the standards' requirements, and the application conditions can be found in part catalog section ***facts*** & DATA: "Technical information".

# Feed-through blocks with spring connection for junction boxes, type *WKF/WKIF*

**fasis** BIT

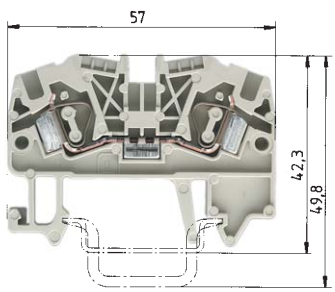


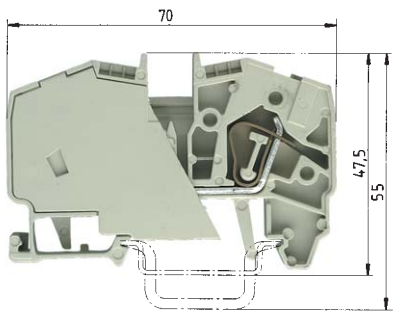


| | | WKF 4/35 | | | | WKF 10/35 | | | |
|---|---|---|---|---|---|---|---|---|---|
| | | fine stranded | solid | V | A | fine stranded | solid | V | A |
| EN 60 947-7-1/DIN VDE 0611 T1 | | 0.13 – 4 mm² | 0.13 – 6 mm² | 800 V/8 kV/3 | 32 | 2.5 – 10 mm² | 2.5 – 10 mm² | 800 V/8 kV/3 | 57 |
| UL ratings | field/factory wiring | No. 22-10 AWG | | 600 V | 20/30 | No. 14-6 AWG | | 600 V | 55 |
| CSA ratings | | No. 22-10 AWG | | 600 V | 35 | No. 14-6 AWG | | 600 V | 65 |
| Width | Wire strip length | 6 mm | | | 11 mm | 10 mm | | | 13 mm |
| Approvals | | SEV-EEX, RINA, LR, LCIE BV | | | | LR | | | |

| | | Type | Part no. | Std. pack | Type | Part no. | Std. pack |
|---|---|---|---|---|---|---|---|
| **Feed-through block** | Color: gray | WKF 4/35 | 56.704.0053.0 | 100 | WKF 10/35 | 56.710.0053.0 | 50 |
| **Feed-through block** | Color: blue | WKF 4/35 BLAU | 56.704.0053.6 | 100 | WKF 10/35 BLAU | 56.710.0053.6 | 50 |
| **Neutral disconnect block** | Color: blue | | | | | | |
| **Ground block** | Color: green/yellow | | | | | | |
| | | | | | | | |
| **Accessories** | | | | | | | |
| 1. Mounting rail TS 35, DIN rail 7.5 mm high | L = 2 m | 35x27x7,5 EN 60715 | 98.300.0000.0 | 1 | 35x27x7,5 EN 60715 | 98.300.0000.0 | 1 |
| Mounting rail TS 35, DIN rail 15 mm high | L = 2 m | 35x24x15 EN 60715 | 98.360.0000.0 | 1 | 35x24x15 EN 60715 | 98.360.0000.0 | 1 |
| 2. End clamp TS 35, with screw | 8 mm wide | 9708/2 S35 | Z5.522.8553.0 | 100 | 9708/2 S35 | Z5.522.8553.0 | 100 |
| End clamp TS 35, without screw | 8 mm wide | WEF 1/35 | Z5.523.9353.0 | 100 | WEF 1/35 | Z5.523.9353.0 | 100 |
| 3. End plate | Color: gray | APF 2,5 – 4 | 07.312.2153.0 | 10 | | | |
| | Color: blue | APF 2,5 – 4 BLAU | 07.312.2153.6 | 10 | | | |
| 4. Partition plate | Color: gray | TWF 2,5 – 4 | 07.312.2253.0 | 10 | | | |
| | Color: blue | TWF 2,5 – 4 BLAU | 07.312.2253.6 | 10 | | | |
| 5. Cross connector insulated | 2pole | IVB WKF 4 – 2 | Z7.261.1227.0 | 10 | IVB WKF 10 – 2 | Z7.283.8227.0 | 10 |
| (jumper bar) | 3pole | IVB WKF 4 – 3 | Z7.261.1327.0 | 10 | | | |
| | 4pole | IVB WKF 4 – 4 | Z7.261.1427.0 | 10 | | | |
| | 5pole | IVB WKF 4 – 5 | Z7.261.1527.0 | 10 | | | |
| | 6pole | IVB WKF 4 – 6 | Z7.261.1627.0 | 10 | | | |
| | 7pole | IVB WKF 4 – 7 | Z7.261.1727.0 | 20 | | | |
| | 8pole | IVB WKF 4 – 8 | Z7.261.1827.0 | 20 | | | |
| | 9pole | IVB WKF 4 – 9 | Z7.261.1927.0 | 20 | | | |
| | 10pole | IVB WKF 4 – 10 | Z7.261.2027.0 | 20 | | | |
| 6. Wire entry guide | 0.13 – 0.2 mm² | LEL 4/1 WEISS | 05.561.8553.0 | 100 | | | |
| | 0.25 – 0.5 mm² | LEL 4/2 GRAU | 05.561.8653.0 | 100 | | | |
| | 0.75 – 1.0 mm² | LEL 4/3 SCHWARZ | 05.561.8753.0 | 100 | | | |
| 7. Cover with warning symbol 4 blocks | | ADF 4/4 GELB | 04.343.6153.8 | 10 | ADF 10/4 GELB | 04.343.6453.8 | 10 |
| 8. Busbar, E-Cu 10x3 mm, tin-plated | L = 1 m | | | | | | |
| 9. Connector clamp for busbar | 8.5 mm wide | | | | | | |
| | 17 mm wide | | | | | | |
| 10. Busbar support, as end clamp | 8 mm wide | | | | | | |
| 11. Screwdriver, uninsulated | | DIN 5264 B 0,6x3,5 | 06.502.4000.0 | 5 | DIN 5264 B 0,8x4 | 06.502.4100.0 | 5 |
| | | | | | | | |
| Marking accessories see page 48/49 and page 90/91 | | | | | | | |

# fasis

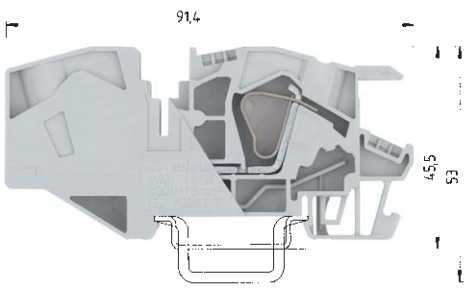


## WKIF 16/35

| fine stranded | stranded | V | A |
|---|---|---|---|
| 4 – 16 mm² | 4 – 16 mm² | 800 V/8 kV/3 | 76 |
| No. 12 – 4 AWG | | 600 V | 78 |

12 mm 16 mm

| Type | Part no. | Std. pack |
|---|---|---|
| WKIF 16/35 | 56.716.1153.0 | 50 |
| WKIF 16/35 BLAU | 56.716.1153.6 | 50 |
| | | |
| | | |
| | | |
| | | |
| 35x27x7,5 EN 60715 | 98.300.0000.0 | 1 |
| 35x24x15 EN 60715 | 98.360.0000.0 | 1 |
| 9708/2 S35 | Z5.522.8553.0 | 100 |
| WEF 1/35 | Z5.523.9353.0 | 100 |
| | | |
| | | |
| | | |
| | | |
| IVB WKIF 16 – 2 | Z7.284.6227.0 | 10 |
| | | |
| | | |
| | | |
| | | |
| | | |
| | | |
| | | |
| | | |
| | | |
| | | |
| | | |
| | | |
| | | |
| | | |
| | | |
| DIN 5264 B 1x5 | 06.502.4200.0 | 5 |
| | | |
| | | |

# Neutral disconnect blocks with spring connection for junction boxes, type *WKF/WKIF*

**fasis** BIT

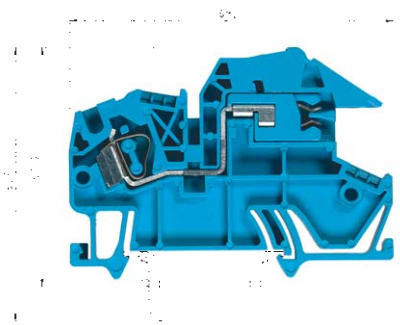

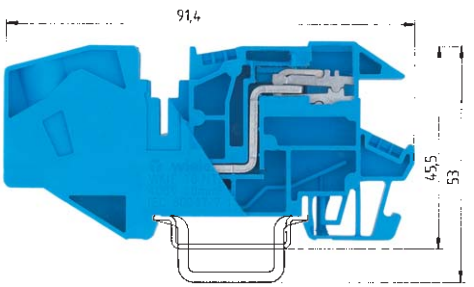


| | | WKF 4 NT/35 | | | | WKIF 16 NT/35 | | | |
|---|---|---|---|---|---|---|---|---|---|
| | | fine stranded | solid | V | A | fine stranded | stranded | V | A |
| EN 60 947-7-1; 1991/DIN VDE 0611 T1/08.92 | | 0.13 – 4 mm² | 0.13 – 6 mm² | 400 V/6 kV/3 | 30 | 4 – 16 mm² | 4 – 16 mm² | 400 V/6 kV/3 | 68 |
| UL ratings | | | | 600 V | 20 | | | | |
| CSA ratings | | No. 22-10 AWG | | 600 V | 25 | | | | |
| Width | Wire strip length | 6 mm | | | 11 mm | 12 mm | | | 16 mm |
| Approvals | | | | | | | | | |

| | | Type | Part no. | Std. pack | Type | Part no. | Std. pack |
|---|---|---|---|---|---|---|---|
| **Feed-through block** | Color: gray | | | | | | |
| **Feed-through block** | Color: blue | | | | | | |
| **Neutral disconnect block** | Color: blue | WKF 4 NT/35 | 56.704.8153.0 | 100 | WKIF 16 NT/35 | 56.716.8153.0 | 50 |
| **Ground block** | Color: green/yellow | | | | | | |
| | | | | | | | |
| **Accessories** | | | | | | | |
| 1. Mounting rail TS 35, DIN rail 7.5 mm high | L = 2 m | 35x27x7,5 EN 60715 | 98.300.0000.0 | 1 | 35x27x7,5 EN 60715 | 98.300.0000.0 | 1 |
| Mounting rail TS 35, DIN rail 15 mm high | L = 2 m | 35x24x15 EN 60715 | 98.360.0000.0 | 1 | 35x24x15 EN 60715 | 98.360.0000.0 | 1 |
| 2. End clamp TS 35, with screw | 8 mm wide | 9708/2 S35 | Z5.522.8553.0 | 100 | 9708/2 S35 | Z5.522.8553.0 | 100 |
| End clamp TS 35, without screw | 8 mm wide | WEF 1/35 | Z5.523.9353.0 | 100 | WEF 1/35 | Z5.523.9353.0 | 100 |
| 3. End plate | Color: gray | | | | | | |
| | Color: blue | APF 4 NT | 07.312.5653.0 | 10 | | | |
| | Color: green | | | | | | |
| 4. Partition plate | | | | | | | |
| 5. Cross connector insulated | 2pole | IVB WKF 4 – 2 | Z7.261.1227.0 | 10 | IVB WKIF 16 – 2 | Z7.284.6227.0 | 10 |
| (jumper bar) | 3pole | IVB WKF 4 – 3 | Z7.261.1327.0 | 10 | | | |
| | 4pole | IVB WKF 4 – 4 | Z7.261.1427.0 | 10 | | | |
| | 5pole | IVB WKF 4 – 5 | Z7.261.1527.0 | 10 | | | |
| | 6pole | IVB WKF 4 – 6 | Z7.261.1627.0 | 10 | | | |
| | 7pole | IVB WKF 4 – 7 | Z7.261.1727.0 | 20 | | | |
| | 8pole | IVB WKF 4 – 8 | Z7.261.1827.0 | 20 | | | |
| | 9pole | IVB WKF 4 – 9 | Z7.261.1927.0 | 20 | | | |
| | 10pole | IVB WKF 4 – 10 | Z7.261.2027.0 | 20 | | | |
| 6. Wire entry guide | 0.13 – 0.2 mm² | LEL 4/1 WEISS | 05.561.8553.0 | 100 | | | |
| | 0.25 – 0.5 mm² | LEL 4/2 GRAU | 05.561.8653.0 | 100 | | | |
| | 0.75 – 1.0 mm² | LEL 4/3 SCHWARZ | 05.561.8753.0 | 100 | | | |
| 7. Cover with warning symbols over 4 blocks | | ADF 4/4 GELB | 04.343.6153.8 | 10 | | | |
| 8. Busbar, E-Cu 10x3 mm, tin-plated | L = 1 m | 9813 M SN | 98.290.1000.0 | 1 | 9813 M SN | 98.290.1000.0 | 1 |
| 9. Connector clamp for busbar | 8.5 mm wide | WAK 16/2 BLAU | 30.494.3021.6 | 100 | WAK 16/2 BLAU | 30.494.3021.6 | 100 |
| | 17 mm wide | WAK 35/2 | 30.494.4121.0 | 50 | WAK 35/2 | 30.494.4121.0 | 50 |
| 10. Busbar support as, end clamp | 8 mm wide | WKIF SH/E/35 | Z1.108.8453.0 | 10 | WKIF SH/E/35 | Z1.108.8453.0 | 10 |
| 11. Screwdriver, uninsulated | | DIN 5264 B 0,6x3,5 | 06.502.4000.0 | 5 | DIN 5264 B 1x5 | 06.502.4200.0 | 5 |
| | | | | | | | |
| Marking accessories see page 48/49 and page 90/91 | | | | | | | |

# fasis

# Ground blocks with spring connection for junction boxes, type *WKF/WKIF*

**fasis** BIT

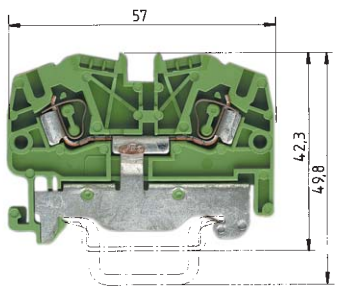


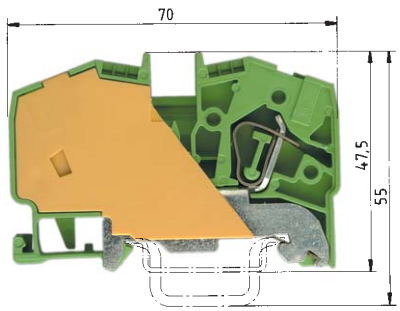


Ratings for adjacent feed-through blocks of same series and size
Current carrying capabilities of the mounting rails see catalog section ***facts*** & DATA

Ratings for adjacent feed-through blocks of same series and size
Current carrying capabilities of the mounting rails see catalog section ***facts*** & DATA

| | | WKF 4 SL/35 | | | | WKF 10 SL/35 | | | |
|---|---|---|---|---|---|---|---|---|---|
| | | fine stranded | solid | V | A | fine stranded | solid | V | A |
| EN 60 947-7-2/DIN VDE 0611 T3 | | 0.13 – 4 mm² | 0.13 – 6 mm² | 800 V/8 kV/3 | 32 | 2.5 – 10 mm² | 2.5 – 10 mm² | 800 V/8 kV/3 | 57 |
| UL ratings | field/factory wiring | No. 22-10 AWG | | 600 V | | No. 14-6 AWG | | 600 V | |
| CSA ratings | | No. 22-10 AWG | | 600 V | | No. 14-6 AWG | | 600 V | |
| Width | Wire strip length | 6 mm | | | 11 mm | 10 mm | | | 13 mm |
| Approvals | | SEV-EEX RINA LR LCIE BV | | | | | | | |

| | | Type | Part no. | Std. pack | Type | Part no. | Std. pack |
|---|---|---|---|---|---|---|---|
| **Feed-through block** | Color: gray | | | | | | |
| **Feed-through block** | Color: blue | | | | | | |
| **Neutral disconnect block** | Color: blue | | | | | | |
| **Ground block** | Color: green/yellow | WKF 4 SL/35 | 56.704.9053.0 | 100 | WKF 10 SL/35 | 56.710.9053.0 | 50 |
| | | | | | | | |
| **Accessories** | | | | | | | |
| 1. Mounting rail TS 35, DIN rail 7.5mm high | L = 2 m | 35 x 27 x 7,5 EN 60715 | 98.300.0000.0 | 1 | 35 x 27 x 7,5 EN 60715 | 98.300.0000.0 | 1 |
| Mounting rail TS 35, DIN rail 15mm high | L = 2 m | 35 x 24 x 15 EN 60715 | 98.360.0000.0 | 1 | 35 x 24 x 15 EN 60715 | 98.360.0000.0 | 1 |
| 2. End clamp for TS 35, with screw | 8 mm wide | 9708/2 S35 | Z5.522.8553.0 | 100 | 9708/2 S35 | Z5.522.8553.0 | 100 |
| End clamp for TS 35, without screws | 8 mm wide | WEF 1/35 | Z5.523.9353.0 | 100 | WEF 1/35 | Z5.523.9353.0 | 100 |
| 3. End plate | Color: gray | | | | | | |
| | Color: blue | | | | | | |
| | Color: green | APF 2,5-4 GRÜN | 07.312.2153.7 | 10 | | | |
| 4. Partition plate | Color: gray | | | | | | |
| | Color: blue | | | | | | |
| 5. Cross connector insulated | 2pole | | | | | | |
| (jumper bar) | 3pole | | | | | | |
| | 4pole | | | | | | |
| | 5pole | | | | | | |
| | 6pole | | | | | | |
| | 7pole | | | | | | |
| | 8pole | | | | | | |
| | 9pole | | | | | | |
| | 10pole | | | | | | |
| 6. Wire entry guide | 0.13 – 0.2 mm² | LEL 4/1 WEISS | 05.561.8553.0 | 100 | | | |
| | 0.25 – 0.5 mm² | LEL 4/2 GRAU | 05.561.8653.0 | 100 | | | |
| | 0.75 – 1.0 mm² | LEL 4/3 SCHWARZ | 05.561.8753.0 | 100 | | | |
| 7. Cover with warning symbol over 4 blocks | | ADF 4/4 GELB | 04.343.6153.8 | 10 | ADF 10/4 GELB | 04.343.6453.8 | 10 |
| 8. Busbar, E-Cu 10 x 3 mm, tin-plated | L = 1 m | | | | | | |
| 9. Connector clamp for busbar | 8.5 mm wide | | | | | | |
| | | 17 mm wide | | | | | |
| 10. Busbar support, as end clamp | 8 mm wide | | | | | | |
| 11. Screwdriver, uninsulated | | DIN 5264 B 0,6 x 3,5 | 06.502.4000.0 | 5 | DIN 5264 B 0,8 x 4 | 06.502.4100.0 | 5 |
| Marking accessories see page 48/49 and page 90/91 | | | | | | | |

# fasis

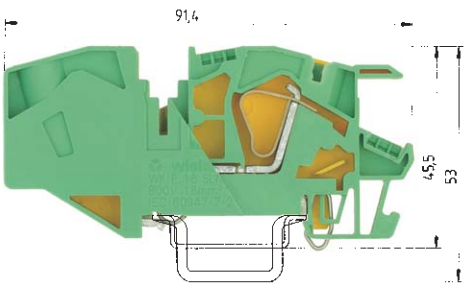


## WKIF 16 SL/35

| fine stranded | stranded | V | A |
|---|---|---|---|
| 4 – 16 mm² | 4 – 16 mm² | 800 V/8 kV/3 | 76 |
| UL pending | | | |
| No. 12-4 AWG | | 600 V | |
| 12 mm | | | 16 mm |

| Type | Part no. | Std. pack |
|---|---|---|
| WKIF 16 SL/35 | 56.716.9153.0 | 50 |
| 35 x 27 x 7,5 EN 60715 | 98.300.0000.0 | 1 |
| 35 x 24 x 15 EN 60715 | 98.360.0000.0 | 1 |
| 9708/2 S35 | Z5.522.8553.0 | 100 |
| WEF 1/35***) | Z5.523.9353.0 | 100 |
| DIN 5264 B 1 x 5 | 06.502.4200.0 | 5 |

# Terminal blocks for electrical installations with screw connection, type *WKI*

**selos** BIT

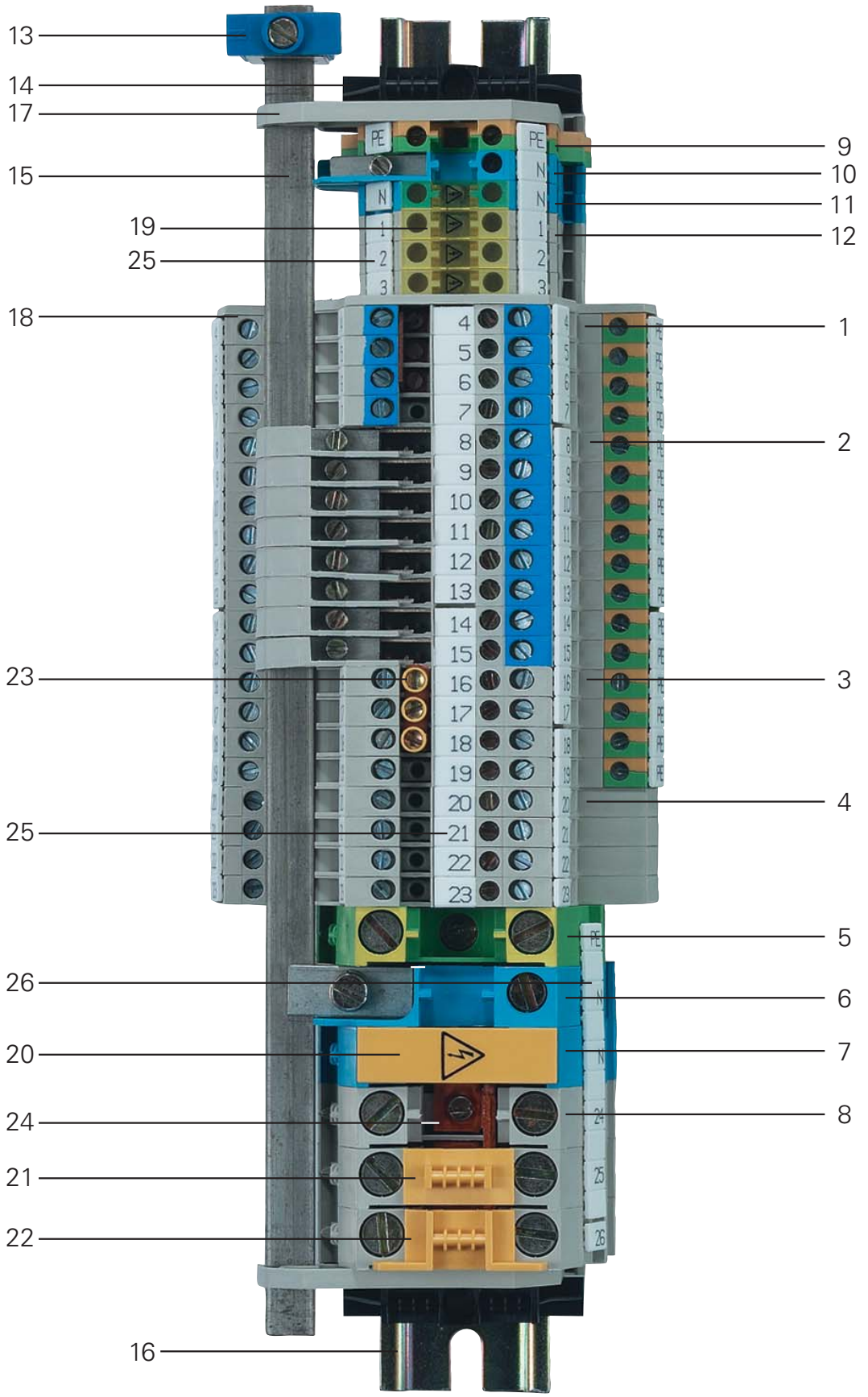

# selos



| Item | Description | Type | Part number |
|---|---|---|---|
| 1 | Installation blocks | WKI 4 N-D-SL | 56.404.9455.0 |
| 2 | Installation blocks | WKI 4 NT-D-SL | 56.404.9555.0 |
| 3 | Installation blocks | WKI 4 D-D-SL | 56.404.9855.0 |
| 4 | Installation block | WKI 4 D-D | 56.404.9755.0 |
| 5 | Ground block | WKI 16 SL/35 | 56.516.9255.0 |
| 6 | Neutral disconnect block | WKI 16 ETK/U | 57.516.8255.0 |
| 7 | Feed through block | WKI 16 /U BLAU | 57.516.1155.6 |
| 8 | Feed through block | WKI 16 /U | 57.516.1155.0 |
| 9 | Ground block | WK 4 SL/U | 57.504.9055.0 |
| 10 | Neutral disconnect block | WKN 4 ETK/U | 57.504.8155.0 |
| 11 | Feed through block | WK 4 /U BLAU | 57.504.0055.6 |
| 12 | Feed through block | WK 4 /U | 57.504.0055.0 |
| 13 | Connector clamp | WAK 16/2 BLAU | 30.494.3021.6 |
| 14 | End clamp | 9708/2 S35 | Z5.522.8553.0 |
| 15 | Busbar 10 x 3 | 9813 M Sn | 98.290.1000.0 |
| 16 | Mounting rail | 35 x 27 x 7.5 | 98.300.0000.0 |
| 17 | Busbar support | WKI SH/U | 01.108.3255.0 |
| 18 | End plate | API 4/2 | 07.311.6555.0 |
| 19 | Cover with warning symbol | AD 4/4 GELB | 04.343.4856.8 |
| 20 | Cover with warning symbol | ADI 16/1 GELB | 04.325.8553.8 |
| 21 | Cover with marking facility | AD VB 16 GELB | 04.326.2453.8 |
| 22 | Partition plate with marking facility | TS 16 GELB | 07.311.2453.8 |
| 23 | Cross connector, insulated (12pole) | IVB WKI 4–12 | Z7.271.5227.0 |
| 24 | Cross connector, uninsulated | VB WKI 16–3 | Z7.289.0327.0 |
| 25 | Marking strip | 9705 A/6/10 B | 04.842.6053.0 |
| 26 | Marking strip | 9705 A/6/10/5 B | 04.842.6553.0 |

# Terminal blocks for electrical installations with screw connection, type *WKI*

**selos** BIT

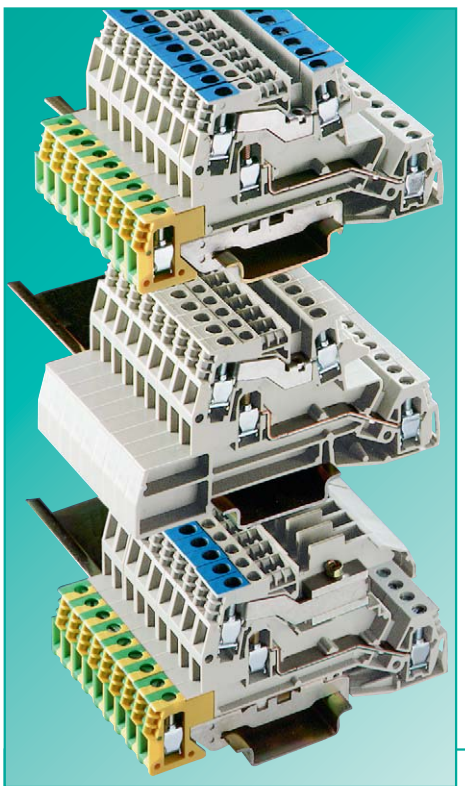

**WKI provides ...**

- ❒ Clear circuit identification
- ❒ Small dimensions in three-tier design
- ❒ Neutral conductor disconnect function
- ❒ All wire entry points in the same plane
- ❒ Mounting for TS 35 DIN rail
- ❒ Circuit protection via fuse
- ❒ Ground connection directly to the DIN rail

**Application advantages**

- ❒ Multiple circuits with color coding in one terminal block
- ❒ Best suited for small junction boxes with cover according to DIN 43871
- ❒ Fast and safe disconnection of the neutral conductor with WKI 4 NT-D-SL
- ❒ Easy wiring
- ❒ Sliding disconnect shows the state of the neutral circuit (open or closed)

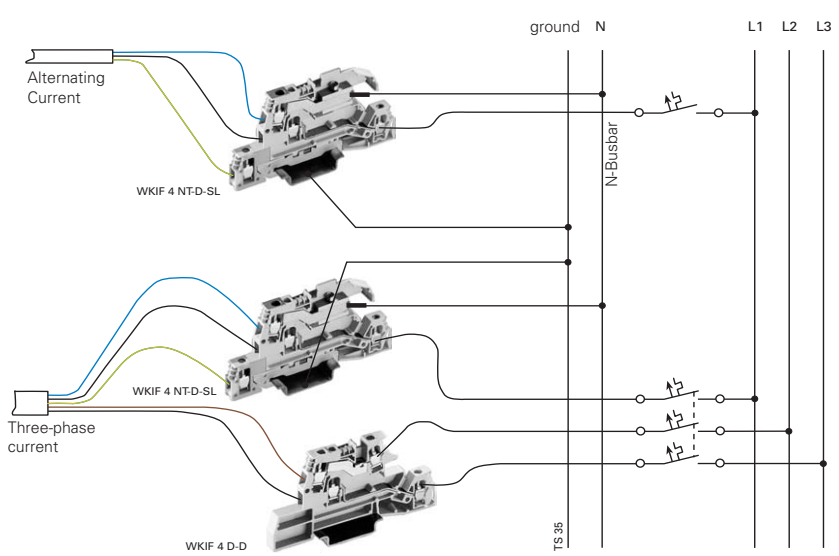


- ❒ ***selos*** BIT is designed to meet the wiring and installation requirements of distribution systems in commercial and institutional buildings (such as hospitals, schools, shopping malls, theaters, office buildings, institutes, airports) according to IEC 60364 and standard control requirements
- ❒ WKI 4 NT-D-SL enables the required circuit isolation test without disconnecting the neutral conductor
- ❒ WKI provides installation blocks in 5 versions:
  WKI 4 DU
  WKI 4 D-D
  WKI 4 D-D-SL
  WKI 4 N-D-SL
  WKI 4 NT-D-SL

  3 special variants:
  WKI 4 NT-D-SL-GL
  WKI 4 NTN-D-SL
  WKI 4 TKG-D-SL
- ❒ Other applications include control wiring. For example WKI 4 TKG-D-SL signal in one terminal with fusing of the (+) circuit

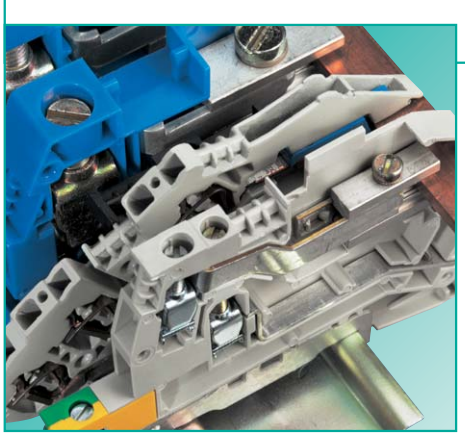

- ❒ Connection slot on the terminal block for the neutral busbar
- ❒ Captive hardware and vibration design

- ❒ The terminal blocks for electrical installations of the WKI series in the NT version can be combined with ...

  the terminal blocks of the WKIF series (spring connection technology)

  the neutral disconnect blocks (ETK) of the WKN series (screw connection technology)

# selos



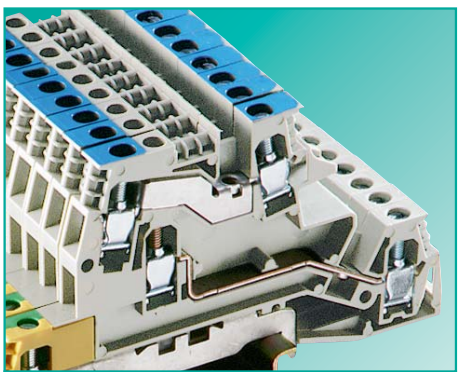

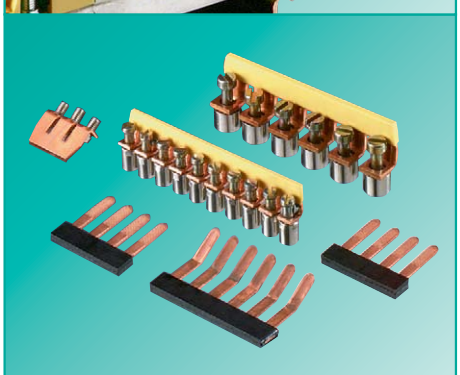

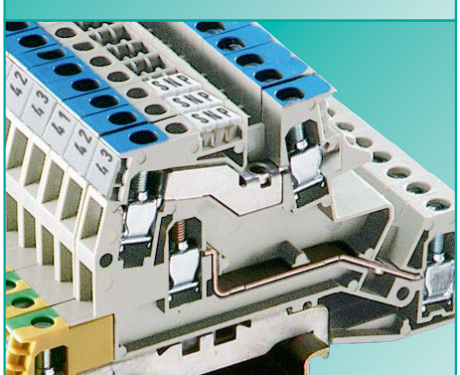

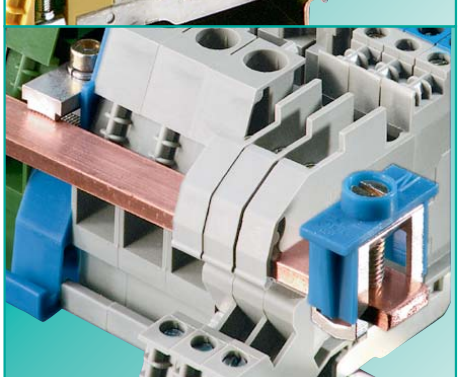

### Jumpering with cross connectors

- ❒ Jumpering with insulated and uninsulated cross connectors (jumperbars)
- ❒ Cross connectors do not take up clamping space
- ❒ Uninsulated cross connectors can be cut to length
- ❒ When using cross connectors, end plates or partitions are required to maintain max. voltage rating
- ❒ Cross connectors come pre-assembled

### Jumpering with jumper combs

- ❒ Jumpering with insulated jumper combs
- ❒ Jumper comb and conductor are inserted in the clamping body and clamped

### Marking facilities

- ❒ Marking facility for each termination point
- ❒ Tear-off marking strips for 3-digit marking facilities per block
- ❒ Single marking tags in 5 mm spacing
- ❒ Marking strips (10 individual marking tags) to snap on to 10 terminal blocks
- ❒ Custom marking upon request

### Connector clamps

- ❒ Connector clamps for busbar 10 x 3 mm (E-Cu, tin-plated)
- ❒ WAK 16/2... 0.75 – 16 $mm^2$
- ❒ WAK 35/2... 16 – 35 $mm^2$
- ❒ Clear identification of the circuit task when the erternal neutral conductor is connected to the busbar

### DQS certificates for all company divisions

- ❒ Quality standard as per DIN ISO 9001 in Development, Production and Assembly
- ❒ Continued control of the quality standard by means of regular internal and external quality audits
- ❒ Compatible with certificates of other countries:
  - BSI Certificate, Great Britain
  - SQS Certificate, Switzerland
  - Aib-Vincotte Certificate, Belgium
  - ÖQS Certificate, Austria

### Material

❒ Metal parts

Special alloys enable a low contact resistance and provide a gas-tight contact area:

Clamping body/clamping screws: Steel, zinc-plated and dichromated

Current carrying bar: tin-plated copper

❒ Insulation material

Polyamide has excellent electrical, chemical and mechanical characteristics

Insulating housings: Polyamide 66/6

Tracking current resistance: CTI 600

Flammability class: UL 94-V0

(also see master catalog section ***facts*** & DATA: Technical information)

You can use our ***wieplan*** software to configure your own terminal block assemblies (see page 10/11).

### Note:

The information regarding cross sectional area and connection types pertains to unprepared wires without ferrules.

The voltage ratings apply to the terminals in their intended application. When different products are mounted adjacent to each other, the proper isolation distances must be adhered to. For this purpose, **Wieland** offers a large selection of appropriate accessories.

A detailed description of technical data, the standards' requirements, and the application conditions can be found in part catalog section ***facts*** & DATA: "Technical information".

# Terminal blocks for electrical installations with screw connection, type *WKI 4*

**selos** BIT

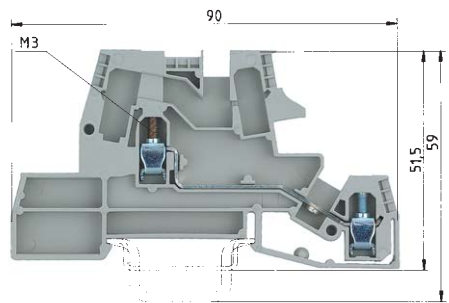


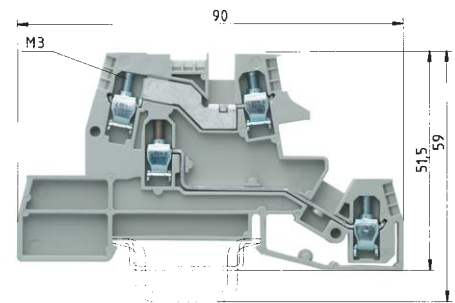


Grounding:

*) For the current carrying capability of the mounting rail see catalog ***facts*** & DATA

DU – line feed through block:
lower contact equipped only

D – line feed through block
D – line feed through block

| | | WKI 4 DU | | | | WKI 4 D-D | | | |
|---|---|---|---|---|---|---|---|---|---|
| EN 60947-7-1/DIN VDE 0611 T1 | | fine stranded | solid | V | A | fine stranded | solid | V | A |
| EN 60947-7-2 | | 0.5 – 4 mm² | 0.5 – 6 mm² | 400 V/6 kV/3 | 26 | 0.5 – 4 mm² | 0.5 – 6 mm² | 400 V/6 kV/3 | 26 |
| UL ratings | | No. 22-10 AWG | | 300 V | 24 | No. 22-10 AWG | | 300 V | 24 |
| CSA ratings | | No. 22-10 AWG | | 300 V | 25 | No. 22-10 AWG | | 300 V | 25 |
| Width | Wire strip length | 6 mm | | | 7 mm | 6 mm | | | 7 mm |
| Approvals | | | | | | | | | |

| | | Type | Part no. | Std. pack | Type | Part no. | Std. pack |
|---|---|---|---|---|---|---|---|
| **Installation block** | Color: gray | | | | WKI 4 D-D | 56.404.9755.0 | 50 |
| **Lower tier of installation block equipped only** | | WKI 4 DU | 56.404.9655.0 | 50 | | | |
| **Installation block with indicator lamp** (110 – 200 V) | | | | | | | |
| | | | | | | | |
| **Accessories** | | | | | | | |
| 1. Mounting rail TS 35, DIN rail 7.5 mm high | L = 2 m | 35 x 27 x 7,5 EN 60715 | 98.300.0000.0 | 1 | 35 x 27 x 7,5 EN 60715 | 98.300.0000.0 | 1 |
| Mounting rail TS 35, DIN rail 15 mm high | L = 2 m | 35 x 24 x 15 EN 60715 | 98.360.0000.0 | 1 | 35 x 24 x 15 EN 60715 | 98.360.0000.0 | 1 |
| 2. End clamp for TS 35, with screw | 8 mm wide | 9708/2 S35 | Z5.522.8553.0 | 100 | 9708/2 S35 | Z5.522.8553.0 | 100 |
| End clamp, screwless | 8 mm thick | WEF 1/35 | Z5.523.9353.0 | 100 | WEF 1/35 | Z5.523.9353.0 | 100 |
| 3. End plate | 2 mm thick | API 4/2 | 07.311.6555.0 | 10 | API 4/2 | 07.311.6555.0 | 10 |
| 4. Partition plate | | TWI 4 | 07.311.6955.0 | 10 | TWI 4 | 07.311.6955.0 | 10 |
| 5. Cross connector with screws, E-Cu | | | | | | | |
| | uninsulated 2pole | 9703/6-2 | Z7.211.0227.0 | 50 | 9703/6-2 | Z7.211.0227.0 | 50 |
| | to 6pole | 9703/6-6 | Z7.211.0627.0 | 50 | 9703/6-6 | Z7.211.0627.0 | 50 |
| | insulated 12pole | IVB WKI 4-12 | Z7.271.5227.0 | 10 | IVB WKI 4-12 | Z7.271.5227.0 | 10 |
| Field divisible strip – uninsulated, | 70pole | 9703/6 M-70 | Z7.211.0027.0 | 10 | 9703/6 M-70 | Z7.211.0027.0 | 10 |
| 6. Busbar, E-Cu 10 x 3 mm, $I_N$ = 140 A | L = 1 m | 9813 M | 98.290.0000.0 | 1 | 9813 M | 98.290.0000.0 | 1 |
| Busbar, tin-plated, $I_N$ = 140 A | L = 1 m | 9813 M Sn | 98.290.1000.0 | 1 | 9813 M Sn | 98.290.1000.0 | 1 |
| 7. Busbar support | 4 mm wide | WKI/SH/U | 01.108.3255.0 | 10 | WKI/SH/U | 01.108.3255.0 | 10 |
| Busbar support | 8 mm wide | WKIF SH/E/35 | Z1.108.8453.0 | 10 | WKIF SH/E/35 | Z1.108.8453.0 | 10 |
| 8. Connector clamp for busbar | | | | | | | |
| 16 mm² | 8.5 mm wide | WAK 16/2 BLAU | 30.494.3021.6 | 100 | WAK 16/2 BLAU | 30.494.3021.6 | 100 |
| 35 mm² | 17 mm wide | WAK 35/2 | 30.494.4121.0 | 50 | WAK 35/2 | 30.494.4121.0 | 50 |
| 9. Screwdriver, uninsulated | | DIN 5264 B 0,6 x 3,5 | 06.502.4000.0 | 5 | DIN 5264 B 0,6 x 3,5 | 06.502.4000.0 | 5 |
| Marking accessories see page 48/49 and page 90/91 | | | | | | | |

# selos



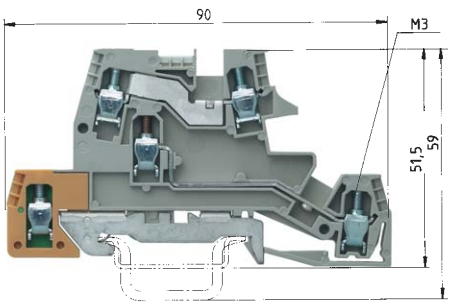


D – line feed through block
D – line feed through block
SL – ground

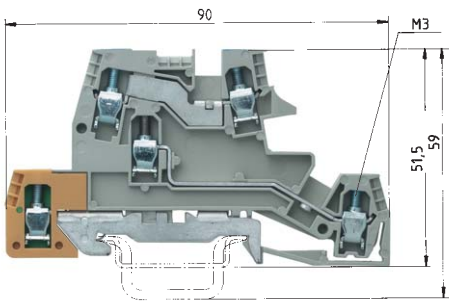


N – neutral feed-through block
D – line feed through block
SL – ground

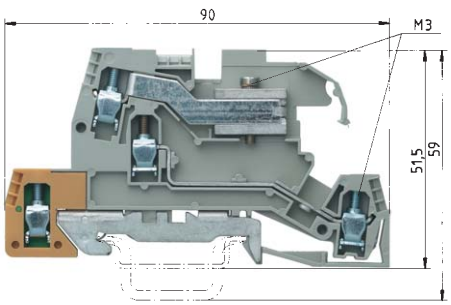


N – disconnect block
D – line feed through block
SL – ground
GL – indicator lamp

## WKI 4 D-D-SL

| fine stranded | solid | V | A |
|---|---|---|---|
| 0.5 – 4 mm² | 0.5 – 6 mm² | 400 V/6 kV/3 | 26*) |
| No. 22-10 AWG | | 300 V | 24 |
| No. 22-10 AWG | | 300 V | 25 |
| 6 mm | | | 7 mm |

| Type | Part no. | Std. pack |
|---|---|---|
| WKI 4 D-D-SL | 56.404.9855.0 | 50 |
| | | |
| | | |
| | | |
| | | |
| 35 x 27 x 7,5 EN 60715 | 98.300.0000.0 | 1 |
| 35 x 24 x 15 EN 60715 | 98.360.0000.0 | 1 |
| 9708/2 S35 | Z5.522.8553.0 | 100 |
| WEF 1/35 | Z5.523.9353.0 | 100 |
| API 4/2 | 07.311.6555.0 | 10 |
| TWI 4 | 07.311.6955.0 | 10 |
| | | |
| 9703/6-2 | Z7.211.0227.0 | 50 |
| 9703/6-6 | Z7.211.0627.0 | 50 |
| IVB WKI 4-12 | Z7.271.5227.0 | 10 |
| 9703/6 M-70 | Z7.211.0027.0 | 10 |
| 9813 M | 98.290.0000.0 | 1 |
| 9813 M Sn | 98.290.1000.0 | 1 |
| WKI/SH/U | 01.108.3255.0 | 10 |
| WKIF SH/E/35 | Z1.108.8453.0 | 10 |
| | | |
| WAK 16/2 BLAU | 30.494.3021.6 | 100 |
| WAK 35/2 | 30.494.4121.0 | 50 |
| DIN 5264 B 0,6 x 3,5 | 06.502.4000.0 | 5 |

*CL I, ZN1, AExe II

## WKI 4 N-D-SL

| fine stranded | solid | V | A |
|---|---|---|---|
| 0.5 – 4 mm² | 0.5 – 6 mm² | 400 V/6 kV/3 | 26*) |
| No. 22-10 AWG | | 300 V | 24 |
| No. 22-10 AWG | | 300 V | 25 |
| 6 mm | | | 7 mm |

| Type | Part no. | Std. pack |
|---|---|---|
| WKI 4 N-D-SL | 56.404.9455.0 | 50 |
| | | |
| | | |
| | | |
| | | |
| 35 x 27 x 7,5 EN 60715 | 98.300.0000.0 | 1 |
| 35 x 24 x 15 EN 60715 | 98.360.0000.0 | 1 |
| 9708/2 S35 | Z5.522.8553.0 | 100 |
| WEF 1/35 | Z5.523.9353.0 | 100 |
| API 4/2 | 07.311.6555.0 | 10 |
| TWI 4 | 07.311.6955.0 | 10 |
| | | |
| 9703/6-2 | Z7.211.0227.0 | 50 |
| 9703/6-6 | Z7.211.0627.0 | 50 |
| IVB WKI 4-12 | Z7.271.5227.0 | 10 |
| 9703/6 M-70 | Z7.211.0027.0 | 10 |
| 9813 M | 98.290.0000.0 | 1 |
| 9813 M Sn | 98.290.1000.0 | 1 |
| WKI/SH/U | 01.108.3255.0 | 10 |
| WKIF SH/E/35 | Z1.108.8453.0 | 10 |
| | | |
| WAK 16/2 BLAU | 30.494.3021.6 | 100 |
| WAK 35/2 | 30.494.4121.0 | 50 |
| DIN 5264 B 0,6 x 3,5 | 06.502.4000.0 | 5 |

## WKI 4 NT-D-SL (-GL)

| fine stranded | solid | V | A |
|---|---|---|---|
| 0.5 – 4 mm² | 0.5 – 6 mm² | 400 V/6 kV/3 | 26*) |
| No. 22-10 AWG | | 300 V | 24 |
| No. 22-10 AWG | | 300 V | 25 |
| 6 mm | | | 7 mm |

| Type | Part no. | Std. pack |
|---|---|---|
| WKI 4 NT-D-SL | 56.404.9555.0 | 50 |
| | | |
| WKI 4 NT-D-SL-GL | 56.404.9255.0 | 50 |
| | | |
| | | |
| 35 x 27 x 7,5 EN 60715 | 98.300.0000.0 | 1 |
| 35 x 24 x 15 EN 60715 | 98.360.0000.0 | 1 |
| 9708/2 S35 | Z5.522.8553.0 | 100 |
| WEF 1/35 | Z5.523.9353.0 | 100 |
| API 4/2 | 07.311.6555.0 | 10 |
| | | |
| 9703/6-2 | Z7.211.0227.0 | 50 |
| 9703/6-6 | Z7.211.0627.0 | 50 |
| IVB WKI 4-12 | Z7.271.5227.0 | 10 |
| 9703/6 M-70 | Z7.211.0027.0 | 10 |
| 9813 M | 98.290.0000.0 | 1 |
| 9813 M Sn | 98.290.1000.0 | 1 |
| WKI/SH/U | 01.108.3255.0 | 10 |
| WKIF SH/E/35 | Z1.108.8453.0 | 10 |
| | | |
| WAK 16/2 BLAU | 30.494.3021.6 | 100 |
| WAK 35/2 | 30.494.4121.0 | 50 |
| DIN 5264 B 0,6 x 3,5 | 06.502.4000.0 | 5 |

# Terminal blocks for electrical installations with screw connection, type *WKI 4*

**selos** BIT

Fuse application:
Nominal current accord to VDE 0820 T2/EN 60 127-2 when using 1.6 W
– 6.3 A for single blocks
– 4 A for blocks mounted directly adjacent to each other
Voltage and current are determined by the LED and the fuse used in the end application

Ground application:
*) For the current carrying capability of the mounting rail see catalog ***facts*** & DATA

Busbar application:
Position these terminals at the beginning or end of the assembly when incorporating the busbar system

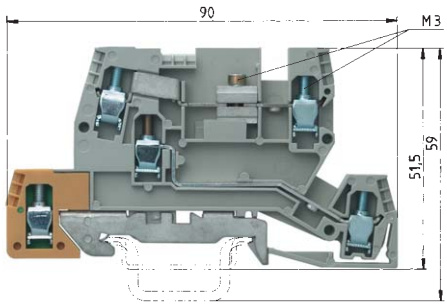


NTN – disconnect block
D – line feed through block:
SL – ground

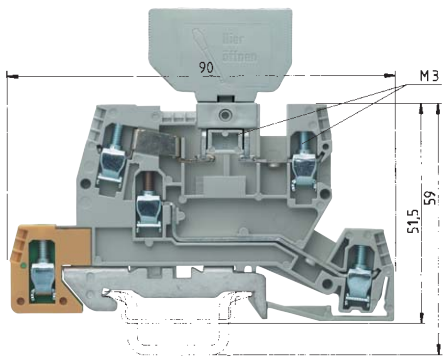


TKG – fuse plug for 5 x 20 fuse
D – line feed through block:
SL – ground block

| | | WKI 4 NTN-D-SL | | | | WKI 4 TKG-D-SL | | | |
|---|---|---|---|---|---|---|---|---|---|
| | | fine stranded | solid | V | A | fine stranded | solid | V | A |
| EN 60 947-7-1, EN 60 947-7-2 | | 0.5 – 4 mm² | 0.5 – 6 mm² | 400 V/6 kV/3 | 26*) | 0.5 – 4 mm² | 0.5 – 6 mm² | 400 V/6 kV/3 | 26*) |
| UL ratings | | No. 22-10 AWG | | 300 V | 24 | No. 22-10 AWG | | 300 V | 12 |
| CSA ratings | | No. 22-10 AWG | | 300 V | 25 | No. 22-10 AWG | | 300 V | 25 |
| Width | Wire strip length | 6 mm | | | 7 mm | 6 mm | | | 7 mm |
| Approvals | | | | | | | | | |

| | | Type | Part no. | Std. pack | Type | Part no. | Std. pack |
|---|---|---|---|---|---|---|---|
| **Installation block** | Color: gray | WKI 4 NTN-D-SL | 56.404.9155.0 | 50 | WKI 4 TKG-D-SL | 56.404.8855.0 | 50 |
| **Fuse holder** for 5 x 20 fuse | Color: gray | | | | Si ST | Z1.299.4055.0 | 10 |
| **Fuse holder** with indicator (24 V) | Color: gray | | | | Si ST LED | Z1.299.4155.0 | 10 |
| **Fuse holder** with indicator (110 – 220 V) | Color: gray | | | | Si ST GL | Z1.299.4255.0 | 10 |
| (G fuse-links DIN 41571, 250 V/6.3 A, 5 x 20 mm) | | | | | | | |
| | | | | | | | |
| **Accessories** | | | | | | | |
| 1. Mounting rail TS 35, DIN rail 7.5 mm high | L = 2 m | 35 x 27 x 7,5 EN 60715 | 98.300.0000.0 | 1 | 35 x 27 x 7,5 EN 60715 | 98.300.0000.0 | 1 |
| Mounting rail TS 35, DIN rail 15 mm high | L = 2 m | 35 x 24 x 15 EN 60715 | 98.360.0000.0 | 1 | 35 x 24 x 15 EN 60715 | 98.360.0000.0 | 1 |
| 2. End clamp for TS 35, with screw | 8 mm wide | 9708/2 S35 | Z5.522.8553.0 | 100 | 9708/2 S35 | Z5.522.8553.0 | 100 |
| End clamp, screwless | 8 mm thick | WEF 1/35 | Z5.523.9353.0 | 100 | WEF 1/35 | Z5.523.9353.0 | 100 |
| 3. End plate | 2 mm thick | API 4/3 | 07.311.6855.0 | 10 | API 4/3 | 07.311.6855.0 | 10 |
| 4. Partition plate | | | | | | | |
| 5. Cross connector with screws, (jumper bar) | | | | | | | |
| uninsulated | 2pole | 9703/6-2 | Z7.211.0227.0 | 50 | 9703/6-2 | Z7.211.0227.0 | 50 |
| | to 6pole | 9703/6-6 | Z7.211.0627.0 | 50 | 9703/6-6 | Z7.211.0627.0 | 50 |
| insulated | 12pole | IVB WKI 4-12 | Z7.271.5227.0 | 10 | IVB WKI 4-12 | Z7.271.5227.0 | 10 |
| Field-divisible strip | – 70pole | 9703/6 M-70 | Z7.211.0027.0 | 10 | 9703/6 M-70 | Z7.211.0027.0 | 10 |
| 6. Busbar, E-Cu 10 x 3 mm, $I_N$ = 140 A | L = 1 m | | | | | | |
| Busbar, tin-plated, $I_N$ = 140 A | L = 1 m | | | | | | |
| 7. Busbar support | 4 mm wide | | | | | | |
| Busbar support | 8 mm wide | | | | | | |
| 8. Connector clamp for busbar | | | | | | | |
| 16 mm² | 8.5 mm wide | | | | | | |
| 35 mm² | 17 mm wide | | | | | | |
| 9. Screwdriver, uninsulated | | DIN 5264 B 0,6 x 3,5 | 06.502.4000.0 | 5 | DIN 5264 B 0,6 x 3,5 | 06.502.4000.0 | 5 |
| | | | | | | | |
| Marking accessories see page 48/49 and page 90/91 | | | | | | | |

# selos

# Terminal blocks with screw connection for junction boxes, type *WKI*

**selos** BIT

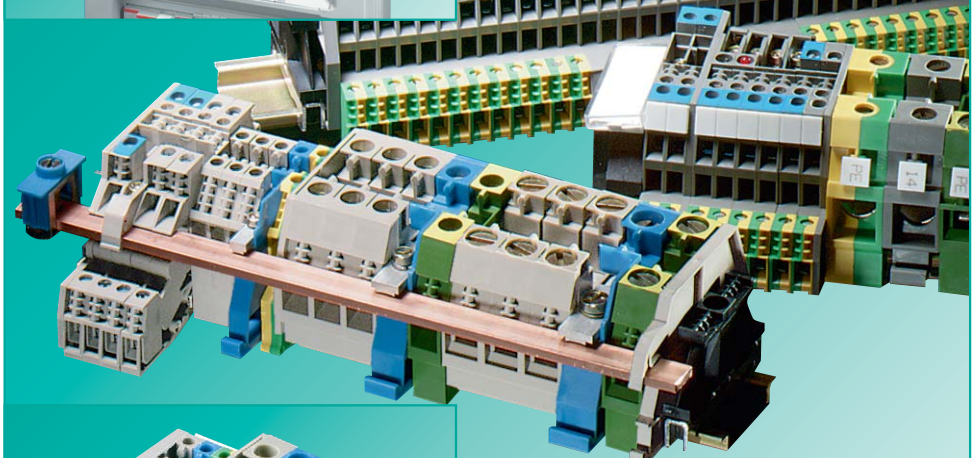

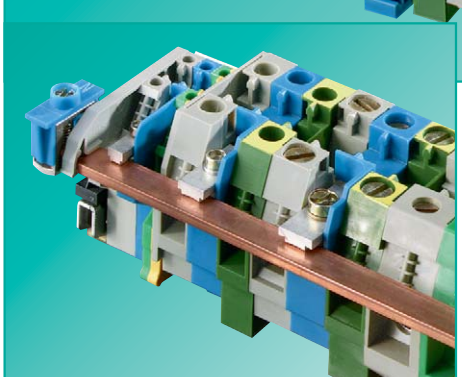

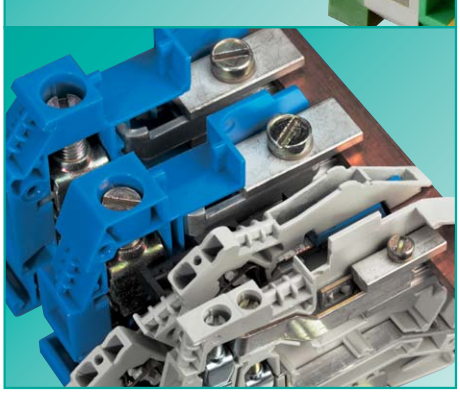

**WKI provides ...**

❒ **Screw connection technology**
in rising cage clamp system with one-piece threaded collar

❒ **Convenient handling**

❒ **Neutral conductor disconnect**

**Application advantages**

→ **High connection range**
Connection of solid, fine stranded and stranded conductors in the rated wire guage with and without ferrules

→ **High clamping force, low contact resistance**
High tightening torques (master catalog, section 8) create high clamping forces for large contact areas resulting in low contact resistance and a gas tight connection

→ **Clamping body**
Delivered in open position, ready to wire

→ **Sliding disconnect**
clearly shows state (open or closed) of the circuit and allows quick and easy disconnect from the busbar

❒ ***selos*** BIT is designed to meet the wiring and installation requirements of distribution systems in commercial and institutional buildings (such as hospitals, schools, shopping malls, theaters, office buildings, airports) according to IEC 60364

❒ The neutral disconnect blocks of the WKI series enable the required insulation test without disconnecting the neutral conductor

❒ **Height**

Due to their height, the terminal blocks of the ***selos*** BIT family are suited for small junction boxes with cover according to DIN 43871.

❒ Connection slot on the terminal block for the neutral busbar

❒ Ground directly to the DIN rail

❒ Captive hardware and vibration resistant design

❒ The WKI series provides

| | |
|---|---|
| Feed-through blocks | 4 – 35 mm² 10-2 AWG |
| Neutral disconnect blocks | 4 – 16 mm² 10-4 AWG |
| Ground blocks | 4 – 35 mm² 10-2 AWG |
| PEN assembly blocks | 10 – 35 mm² 6-2 AWG |

→ Neutral disconnect blocks (ETK) of the WKI series can be combined with ...

the installation blocks of the WKI series (screw connection technology)

Installation blocks of the WKIF series (spring connection technology)

Neutral disconnect blocks (ETK) of the WKN series (screw connection technology)

# selos



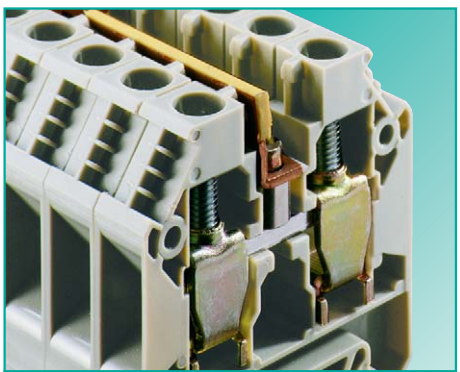

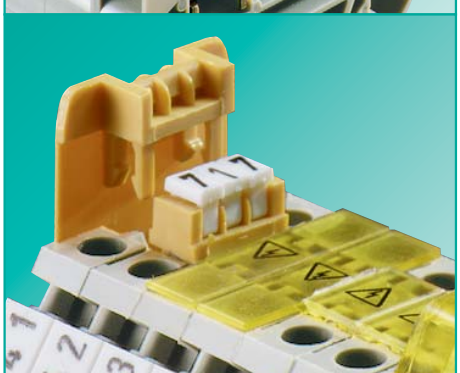

**Cross connection**

- ❒ Jumpering with insulated or uninsulated cross connectors (jumper bars)
- ❒ Insulated cross connectors are touch-safe according to regulation VBG 4
- ❒ Cross connectors come preassembled
- ❒ Available in 2–12pole configurations or as a field-divisible strip – up to 70 poles
- ❒ When used with an end plate or partition the cross connector is rated for the same voltage as the terminal block

**Partition plates**

- ❒ Provides electrical and visual separation for adjacent terminal block groups
- ❒ Pre and post assembly versions
- ❒ Can only be removed with a screwdriver
- ❒ Post assembly version offers marking tag facility and cover
- ❒ 4-digit marking strip for additional marking

**Marking facilities**

- ❒ Marking facility at every termination point
- ❒ Tear-off marking strips for 3-digit marking facilities per block
- ❒ Single marking tags in 5 mm spacing
- ❒ Marking strips (10 individual marking tags) to snap on to 10 terminal blocks
- ❒ Custom marking upon request

**Cover**

- ❒ Cover with warning symbol to snap on to blocks which remain live when the main switch is disconnected (VDE 0113)
- ❒ Cover for uninsulated cross connectors to prevent electrical shock
- ❒ Can only be removed with a screwdriver
- ❒ Extended covers available to prevent tampering with terminal block

**DQS certificates for all company divisions**

- ❒ Quality standard as per DIN ISO 9001 in development, production and assembly
- ❒ Continued control of the quality standard by means of regular internal and external quality audits
- ❒ Compatible with certificates of other countries:
  - BSI Certificate, Great Britain
  - SQS Certificate, Switzerland
  - Aib-Vincotte Certificate, Belgium
  - ÖQS Certificate, Austria

**Material**

❒ Metal parts

Special alloys enable a low contact resistance and provide a gas-tight contact area

Clamping body/clamping screws: steel, zinc-plated and dichromated

Current carrying bar: tin-plated copper

❒ Insulation material

Polyamide has excellent electrical, chemical and mechanical characteristics

Insulating housings: Polyamide 66/6

Tracking current resistance: CTI 600

Flammability class: UL 94-V0

(also see master catalog section ***facts*** & DATA: Technical information)

You can use our ***wieplan*** software to configure your own terminal block assemblies (see page 10/11).

**Note:**

The information regarding cross sectional area and connection types pertains to unprepared wires without ferrules.

The voltage ratings apply to the terminals in their intended application. When different products are mounted adjacent to each other, the proper isolation distances must be adhered to. For this purpose, **Wieland** offers a large selection of appropriate accessories.

A detailed description of technical data, the standards' requirements, and the applica-tion conditions can be found in part catalog section ***facts*** & DATA: "Technical information".

# Terminal blocks with screw connection for junction boxes, type *WKI*

**selos** BIT

**Additional colors available on request:**
Contact Factory

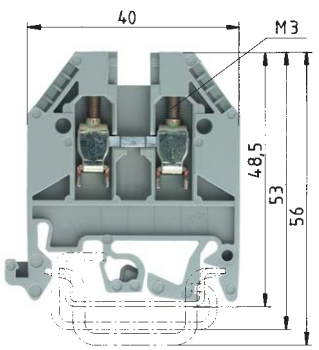


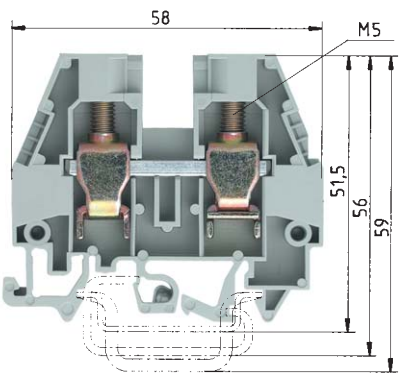


| | | WK 4/U | | | | WKI 10/U | | | |
|---|---|---|---|---|---|---|---|---|---|
| | | fine stranded | solid | V | A | fine stranded | stranded | V | A |
| EN 60 947-7-1/DIN VDE 0611 T1 | | 0.5 – 4 mm² | 0.5 – 6 mm² | 800 V/8 kV/3 | 32 | 1 – 10 mm² | 10 – 16 mm² | 400 V/6 kV/3 | 57 |
| UL ratings | field-/factory | No. 22-10 AWG | | 600 V | 30/35 | No. 16-6 AWG | | 600 V | 65/65 |
| wiring | | No. 20-10 AWG | | 600 V | 40 | No. 16-6 AWG | | 600 V | 70 |
| CSA ratings | | 6 mm | | | 9 mm | 10 mm | | | 18 mm |
| Width | Wire strip length | | | | | | | | |
| Approvals | | SEV-EEX, BKI-EEx | | | | | | | |

| | | Type | Part no. | Std. pack | Type | Part no. | Std. pack |
|---|---|---|---|---|---|---|---|
| **Feed through block** | Color: gray | WK 4/U | 57.504.0055.0 | 100 | WKI 10/U | 57.510.1155.0 | 50 |
| **Feed through block** | Color: blue | WK 4/U BLAU | 57.504.0055.6 | 100 | WKI 10/U BLAU | 57.510.1155.6 | 50 |
| | | | | | | | |
| **Accessories** | | | | | | | |
| 1. Mounting rail TS 35, DIN rail 7.5mm high | L = 2 m | 35 x 27 x 7,5 EN 60715 | 98.300.0000.0 | 1 | 35 x 27 x 7,5 EN 60715 | 98.300.0000.0 | 1 |
| Mounting rail TS 35, DIN rail 15mm high | L = 2 m | 35 x 27 x 15 EN 60715 | 98.360.0000.0 | 1 | 35 x 27 x 15 EN 60715 | 98.360.0000.0 | 1 |
| 2. End clamp for TS 35, with screw | 8 mm wide | 9708/2 S35 | Z5.522.8553.0 | 100 | 9708/2 S35 | Z5.522.8553.0 | 100 |
| End clamp for TS 35, without screws | 8 mm wide | WEF 1/35 | Z5.523.9353.0 | 100 | WEF 1/35 | Z5.523.9353.0 | 100 |
| 3. End plate 1.5 mm thick | Color: gray | AP 2,5-4 | 07.311.0155.0 | 10 | | | |
| 1.5 mm thick | Color: blue | AP 2,5-4 BLAU | 07.311.0155.6 | 10 | | | |
| 1.5 mm thick | Color: green | | | | | | |
| End plate 2 mm thick | Color: gray | | | | API 10-16 | 07.311.9455.0 | 10 |
| 2 mm thick | Color: blue | | | | API 10-16 BLAU | 07.311.9455.6 | 10 |
| 2 mm thick | Color: green | | | | | | |
| 4. Partition plate | Color: gray | TW 2,5-4 | 07.311.1155.0 | 10 | | | |
| | Color: blue | TW 2,5-4 BLAU | 07.311.1155.6 | 10 | | | |
| 5. Cross connector with screws (jumper bar) | 2pole | IVB WK 4-2 | Z7.281.1227.0 | 10 | IVB WKN 10-2 | Z7.283.2227.0 | 10 |
| insulated | 3pole | IVB WK 4-3 | Z7.281.1327.0 | 10 | IVB WKN 10-3 | Z7.283.2327.0 | 10 |
| | 4pole | IVB WK 4-4 | Z7.281.1427.0 | 10 | IVB WKN 10-4 | Z7.283.2427.0 | 10 |
| | 5pole | IVB WK 4-5 | Z7.281.1527.0 | 10 | IVB WKN 10-5 | Z7.283.2527.0 | 10 |
| | 6pole | IVB WK 4-6 | Z7.281.1627.0 | 10 | IVB WKN 10-6 | Z7.283.2627.0 | 10 |
| 6. Partition plate with marking facility | Color: yellow | TS 4 GELB | 07.311.2153.8 | 10 | TS 10 GELB | 07.311.2353.8 | 10 |
| 7. Cover with marking facility | Color: yellow | AD VB 4 GELB | 04.326.2153.8 | 10 | AD VB 10 GELB | 04.342.1056.8 | 10 |
| 8. Cover with warning symbol over 4 blocks | Color: yellow | AD 4/4 GELB | 04.343.4856.8 | 10 | | | |
| Cover with warning symbol for 1 block | Color: yellow | | | | ADI 10/1 GELB | 04.325.8553.8 | 10 |
| 9. Busbar | | | | | | | |
| E-Cu 10 x 3 mm, tin-plated, $I_N$ = 140 | L = 1 m | | | | | | |
| E-Cu 10 x 3 mm, unplated, $I_N$ = 140 A | L = 1 m | | | | | | |
| 10. Connector clamp for busbar | | | | | | | |
| 16 mm² | 8.5 mm wide | | | | | | |
| 35 mm² | 17 mm wide | | | | | | |
| 11. Busbar support | 4 mm wide | | | | | | |
| Busbar support | 8 mm wide | | | | | | |
| Marking accessories see page 48/49 and page 90/91 | | | | | | | |

# selos



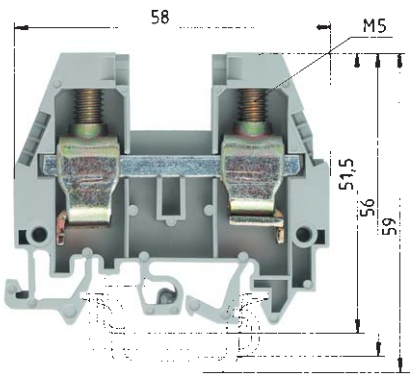


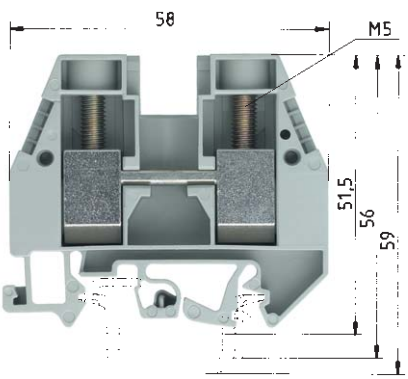


## WKI 16/U

| fine stranded | stranded | V | A |
|---|---|---|---|
| 1 – 16 mm² | 10 – 25 mm² | 400 V/6 kV/3 | 76 |
| No. 12-4 AWG | | 600 V | 65/90 |
| No. 14-4 AWG | | 600 V | 95 |
| 12 mm | | | 16 mm |

## WKI 35/U

| fine stranded | stranded | V | A |
|---|---|---|---|
| 16 – 35 mm² | 16 – 50 mm² | 400 V/6 kV/3 | 125 |
| No. 10-2 AWG | | 600 V | 95/95 |
| No. 10-2 AWG | | 600 V | 110 |
| 16 mm | | | 13 mm |

| Type | Part no. | Std. pack | Type | Part no. | Std. pack |
|---|---|---|---|---|---|
| WKI 16/U | 57.516.1155.0 | 50 | WKI 35/U | 57.535.1155.0 | 20 |
| WKI 16/U BLAU | 57.516.1155.6 | 50 | WKI 35/U BLAU | 57.535.1155.6 | 20 |
| | | | | | |
| | | | | | |
| 35 x 27 x 7,5 EN 60715 | 98.300.0000.0 | 1 | 35 x 27 x 7,5 EN 60715 | 98.300.0000.0 | 1 |
| 35 x 27 x 15 EN 60715 | 98.360.0000.0 | 1 | 35 x 27 x 15 EN 60715 | 98.360.0000.0 | 1 |
| 9708/2 S 35 | Z5.522.8553.0 | 100 | 9708/2 S 35 | Z5.522.8553.0 | 100 |
| | | | | | |
| | | | | | |
| | | | | | |
| | | | | | |
| API 10-16 | 07.311.9455.0 | 10 | API 35 | 07.311.8855.0 | 10 |
| API 10-16 BLAU | 07.311.9455.6 | 10 | API 35 BLAU | 07.311.8855.6 | 10 |
| | | | | | |
| | | | | | |
| | | | | | |
| IVB WKI 16-2 | Z7.284.9227.0 | | IVB WKI 35-2 | Z7.285.4227.0 | 5 |
| IVB WKI 16-3 | Z7.284.9327.0 | | IVB WKI 35-3 | Z7.285.4327.0 | 5 |
| IVB WKI 16-4 | Z7.284.9427.0 | | IVB WKI 35-4 | Z7.285.4427.0 | 5 |
| IVB WKI 16-5 | Z7.284.9527.0 | | IVB WKI 35-5 | Z7.285.4527.0 | 5 |
| IVB WKI 16-6 | Z7.284.9627.0 | | IVB WKI 35-6 | Z7.285.4627.0 | 5 |
| TS 16 GELB | 07.311.2453.8 | 10 | TS 35 GELB | 07.311.8653.8 | 10 |
| AD VB 16 GELB | 04.326.2453.8 | 10 | | | |
| | | | | | |
| ADI 16/1 GELB | 04.325.8653.8 | 10 | ADI 35/1 GELB | 04.325.8753.8 | |

# Neutral disconnect blocks with screw connection for junction boxes, type *WKI*

**selos** BIT

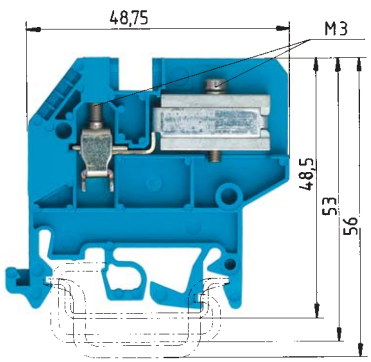


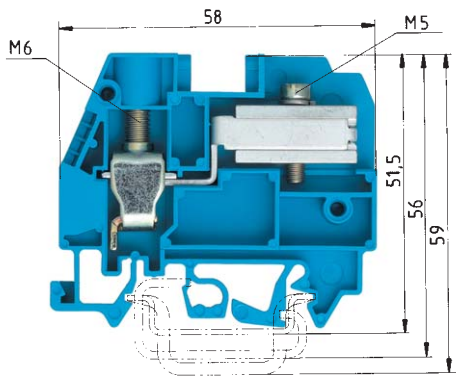


| | WKN 4 ETK/U | WKI 10 ETK/U |
|---|---|---|
| Current carrying capability: | | |
| fine stranded: | 4 mm² 25 A | 10 mm² 45 A |
| solid: | 6 mm² 30 A | stranded: 16 mm² 50 A |
| | fine stranded solid V A | fine stranded stranded V A |
| EN 60 947-7-1/DIN VDE 0611 T1 | 0.5 – 4 mm² 0.5 – 6 mm² 400 V/6 kV/3**) | 1 – 10 mm² 10 – 16 mm² 400 V/6 kV/3**) |
| UL ratings | UL pending | |
| CSA ratings | No. 20-10 AWG 600 V 25 | No. 16-6 AWG 600 V 45 |
| Width / Wire strip length | 6 mm 9 mm | 10 mm 13 mm |
| Approvals | | |

| | | Type | Part no. | Std. pack | Type | Part no. | Std. pack |
|---|---|---|---|---|---|---|---|
| **Neutral-disconnect block** | Color: blue | WKN 4 ETK/U | 57.504.8155.0 | 100 | WKI 10 ETK/U | 57.510.8255.0 | 50 |
| **Connector clamp for Cu busbar** | Color: blue | | | | | | |
| | Color: unplated | | | | | | |
| **Accessories** | | | | | | | |
| 1. Mounting rail TS 35, DIN rail 7.5 mm high | L = 2 m | 35 x 27 x 7,5 EN 60715 | 98.300.0000.0 | 1 | 35 x 27 x 7,5 EN 60715 | 98.300.0000.0 | 1 |
| Mounting rail TS 35, DIN rail 15 mm high | L = 2 m | 35 x 27 x 15 EN 60715 | 98.360.0000.0 | 1 | 35 x 27 x 15 EN 60715 | 98.360.0000.0 | 1 |
| 2. End clamp for TS 35, with screw | 8 mm wide | 9708/2 S35 | Z5.522.8553.0 | 100 | 9708/2 S35 | Z5.522.8553.0 | 100 |
| End clamp for TS 35, without screws | 8 mm wide | WEF 1/35 | Z5.523.9353.0 | 100 | WEF 1/35 | Z5.523.9353.0 | 100 |
| 3. End plate 1.5 mm thick | Color: gray | | | | | | |
| 1.5 mm thick | Color: blue | APN 4 ETK | 07.311.1155.0 | 10 | API 10-16 ETK/1 | 07.312.1955.0 | 10 |
| 1.5 mm thick | Color: green | | | | | | |
| End plate 2 mm thick | Color: gray | | | | | | |
| 2 mm thick | Color: blue | | | | | | |
| 2 mm thick | Color: green | | | | | | |
| 4. Partition plate | Color: gray | | | | | | |
| | Color: blue | | | | | | |
| 5. Cross connector with screws (jumper bar) | 2pole | | | | | | |
| insulated | 3pole | | | | | | |
| | 4pole | | | | | | |
| | 5pole | | | | | | |
| | 6pole | | | | | | |
| 6. Partition plate with marking facility | Color: yellow | | | | | | |
| 7. Cover with marking facility | Color: yellow | | | | | | |
| 8. Cover with warning symbol over 4 blocks | Color: yellow | | | | | | |
| Cover with warning symbol for 1 block | Color: yellow | | | | | | |
| 9. Busbar | | | | | | | |
| E-Cu 10 x 3 mm, tin-plated, $I_N$ = 140 A | L = 1 m | 9813 M | 98.290.0000.0 | 1 | 9813 M | 98.290.0000.0 | 1 |
| E-Cu 10 x 3 mm, unplated, $I_N$ = 140 A | L = 1 m | 9813 M SN | 98.290.1000.0 | 1 | 9813 M SN | 98.290.1000.0 | 1 |
| 10. Connector clamp for busbar | | | | | | | |
| 16 mm² | 8.5 mm wide | WAK 16/2 BLAU | 30.494.3021.0 | | WAK 16/2 BLAU | 30.494.3021.0 | |
| 35 mm² | 17 mm wide | WAK 35/2 | 30.494.4121.0 | 50 | WAK 35/2 | 30.494.4121.0 | 50 |
| 11. Busbar support | 4 mm wide | WKI SH/U | 01.108.3255.0 | 10 | WKI SH/U | 01.108.3255.0 | 10 |
| Busbar support | 8 mm wide | WKIF SH/E/35 | Z1.108.8453.0 | 10 | WKIF SH/E/35 | Z1.108.8453.0 | 10 |
| Marking accessories see page 48/49 and page 90/91 | | | | | | | |

# Connector clamp for Cu busbar (10 x 3 mm), type *WAK*

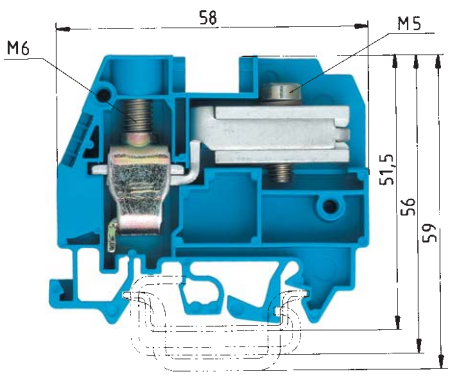

Current carrying capability:
fine stranded: 16 mm² 62 A
stranded: 25 mm² 67 A

## WKI 16 ETK/U

| fine stranded | stranded | V | A |
|---|---|---|---|
| 1 – 16 mm² | 10 – 25 mm² | 400 V/6 kV/3**) | |
| No. 14-4 AWG | | 600 V | 65 |
| 12 mm | | | 15 mm |

| Type | Part no. | Std. pack |
|---|---|---|
| WKI 16 ETK/U | 57.516.8255.0 | 50 |
| 35 x 27 x 7,5 EN 60715 | 98.300.0000.0 | 1 |
| 35 x 27 x 15 EN 60715 | 98.360.0000.0 | 1 |
| 9708/2 S35 | Z5.522.8553.0 | 100 |
| API 10-16 ETK/1 | 07.312.1955.0 | 10 |
| 9813 M | 98.290.0000.0 | 1 |
| 9813 M SN | 98.290.1000.0 | 1 |
| WAK 16/2 BLAU | 30.494.3021.0 | |
| WAK 35/2 | 30.494.4121.0 | 50 |
| WKI SH/U | 01.108.3255.0 | 10 |
| WKIF SH/E/35 | Z1.108.8453.0 | 10 |

EN 60 998-2-1 CCA/CH

## WAK 16/2

| fine stranded | stranded | V | A |
|---|---|---|---|
| 1.5 – 16 mm² | 10 – 16 mm² | | 76 |
| 8.4 mm | | | 16 mm |

| Type | Part no. | Std. pack |
|---|---|---|
| WAK 16/2 BLAU | 30.494.3021.6 | 100 |
| 9813 M | 98.290.0000.0 | 1 |
| 9813 M SN | 98.290.1000.0 | 1 |
| WKI SH/U | 01.108.3255.0 | 10 |
| WKIF SH/E/35 | Z1.108.8453.0 | 10 |

EN 60 998-2-1 CCA/CH

## WAK 35/2

| fine stranded | stranded | V | A |
|---|---|---|---|
| 16 – 35 mm² | 16 – 35 mm² | | 125 |
| 17 mm | | | 14 mm |

| Type | Part no. | Std. pack |
|---|---|---|
| WAK 35/2 BLAU | 30.494.4121.6 | |
| WAK 35/2 | 30.494.4121.0 | 50 |
| 9813 M | 98.290.0000.0 | 1 |
| 9813 M SN | 98.290.1000.0 | 1 |
| WKI SH/U | 01.108.3255.0 | 10 |
| WKIF SH/E/35 | Z1.108.8453.0 | 10 |

# Ground blocks with screw connection for junction boxes, type *WKI SL*

**selos** BIT

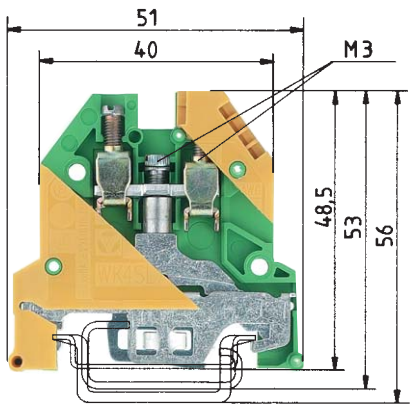


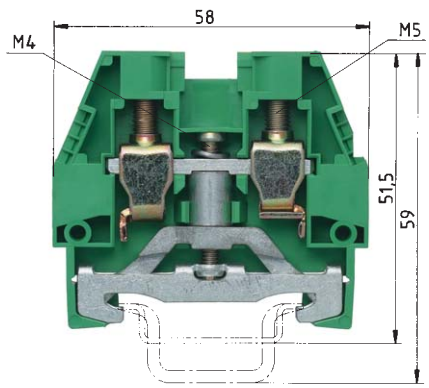


*) Ratings of adjacent feed-through block same series and size

enclosed design

| | WK 4 SL/U | | | | WKI 10/35 | | | |
|---|---|---|---|---|---|---|---|---|
| | fine stranded | solid | V | A | fine stranded | solid/stranded | V | A |
| EN 60 947-7-2/DIN VDE 0611 T3 | 0.5 – 4 mm² | 0.5 – 6 mm² | 800 V/8 kV/3*) | | 1 – 10 mm² | 1.5 – 16 mm² | 800 V/8 kV/3*) | |
| UL ratings | No. 22-10 AWG | | 600 V | | No. 16-6 AWG | | 600 V | |
| CSA ratings | No. 22-10 AWG | | | | No. 16-6 AWG | | | |
| Width | 6 mm | | | | 10 mm | | | |
| Wire strip length | | | | 9 mm | | | | 18 mm |
| Approvals | EPM SEV-EEX BKI-EEx | | | | | | | |

| | Type | Part no. | Std. pack | Type | Part no. | Std. pack |
|---|---|---|---|---|---|---|
| **Ground block** Color: green/yellow | WK 4 SL/U | 57.504.9055.0 | 100 | WKI 10 SL/35 | 56.510.9255.0 | 50 |
| | | | | | | |
| **Accessories** | | | | | | |
| 1. Mounting rail TS 35, DIN rail 7.5 mm high L = 2 m | 35 x 27 x 7,5 EN 60715 | 98.300.0000.0 | 1 | 35 x 27 x 7,5 EN 60715 | 98.300.0000.0 | 1 |
| Mounting rail TS 35, DIN rail 15 mm high L = 2 m | 35 x 27 x 15 EN 60715 | 98.360.0000.0 | 1 | 35 x 27 x 15 EN 60715 | 98.360.0000.0 | 1 |
| 2. End clamp for TS 35, with screw 8 mm wide | 9708/2 S35 | Z5.522.8553.0 | 100 | 9708/2 S35 | Z5.522.8553.0 | 100 |
| End clamp for TS 35, without screws 8 mm wide | WEF 1/35 | Z5.523.9353.0 | 100 | WEF 1/35 | Z5.523.9353.0 | 100 |
| 3. End plate 1.5 mm thick Color: gray | | | | | | |
| 1.5 mm thick Color: blue | | | | | | |
| 1.5 mm thick Color: green | | | | API 10-16 SL | 07.311.9555.0 | 10 |
| End plate 2 mm thick Color: gray | | | | | | |
| 2 mm thick Color: blue | | | | | | |
| 2 mm thick Color: green | | | | | | |
| 4. Partition plate Color: gray | | | | | | |
| Color: blue | | | | | | |
| 5. Cross connector with screws (jumper bar) 2pole | | | | | | |
| insulated 3pole | | | | | | |
| 4pole | | | | | | |
| 5pole | | | | | | |
| 6pole | | | | | | |
| 6. Partition plate with marking facility Color: yellow | | | | | | |
| 7. Cover with marking facility Color: yellow | AD VB4 GELB | 04.326.2153.8 | 10 | AD VB 10 GELB | 04.326.2353.8 | 10 |
| 8. Cover with warning symbol over 4 blocks Color: yellow | AD 4/4 GELB | 04.343.5856.8 | | | | |
| Cover with warning symbol for 1 block Color: yellow | | | | AD 10/1 GELB | 04.325.8553.8 | 10 |
| 9. Busbar | | | | | | |
| E-Cu 10 x 3 mm, tin-plated, $I_N$ = 140 A L = 1 m | | | | | | |
| E-Cu 10 x 3 mm, unplated, $I_N$ = 140 A L = 1 m | | | | | | |
| 10. Connector clamp for busbar | | | | | | |
| 16 mm² 8.5 mm wide | | | | | | |
| 35 mm² 17 mm wide | | | | | | |
| 11. Busbar support 4 mm wide | | | | | | |
| Busbar support 8 mm wide | | | | | | |
| | | | | | | |
| Marking accessories see page 48/49 and page 90/91 | | | | | | |

# selos



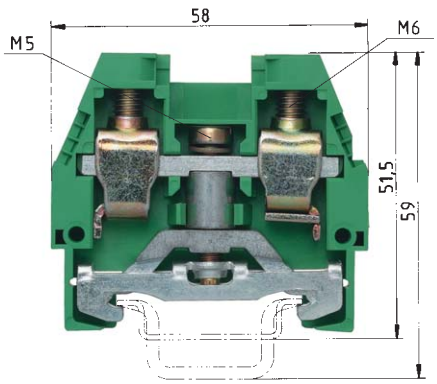


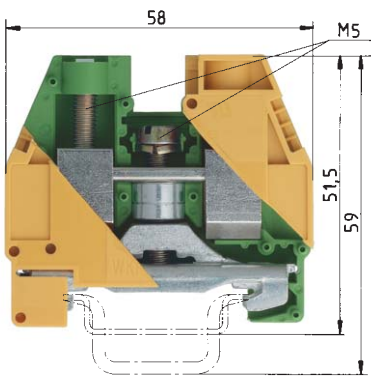


enclosed design

## WKI 16 SL/35

| fine stranded | solid/stranded | V | A |
|---|---|---|---|
| 1 – 16 mm² | 1.5 – 25 mm² | 400 V/6 kV/3*) | |
| No. 12-4 AWG | | 600 V | |
| No. 14-4 AWG | | | |
| 12 mm | | | 16 mm |

## WKI 35 SL/35

| fine stranded | stranded | V | A |
|---|---|---|---|
| 16 – 35 mm² | 16 – 50 mm² | 400 V/6 kV/3*) | |
| UL pending | | | |
| No. 10-2 AWG | | | |
| 16 mm | | | 13 mm |

| Type | Part no. | Std. pack | Type | Part no. | Std. pack |
|---|---|---|---|---|---|
| WKI 16 SL/35 | 56.516.9255.0 | 50 | WKI 35 SL/35 | 56.535.9255.0 | 20 |
| | | | | | |
| | | | | | |
| 35 x 27 x 7,5 EN 60715 | 98.300.0000.0 | 1 | 35 x 27 x 7,5 EN 60715 | 98.300.0000.0 | 1 |
| 35 x 27 x 15 EN 60715 | 98.360.0000.0 | 1 | 35 x 27 x 15 EN 60715 | 98.360.0000.0 | 1 |
| 9708/2 S35 | Z5.522.8553.0 | 100 | 9708/2 S35 | Z5.522.8553.0 | 100 |
| | | | | | |
| | | | | | |
| | | | | | |
| API 10-16 SL | 07.311.9555.0 | 10 | | | |
| | | | | | |
| | | | | | |
| | | | | | |
| | | | | | |
| | | | | | |
| | | | | | |
| | | | | | |
| | | | | | |
| | | | | | |
| | | | | | |
| AD VB 16 GELB | 04.326.2453.8 | 10 | AD VB 10 GELB | 04.326.2353.8 | 10 |
| | | | | | |
| AD 16/1 GELB | 04.325.8653.8 | 10 | AD 35/1 GELB | 04.325.8753.8 | |
| | | | | | |
| | | | | | |
| | | | | | |
| | | | | | |
| | | | | | |
| | | | | | |
| | | | | | |
| | | | | | |
| | | | | | |
| | | | | | |

# PEN assembly block with screw connection for junction boxes, type *WKI...*

**selos** BIT

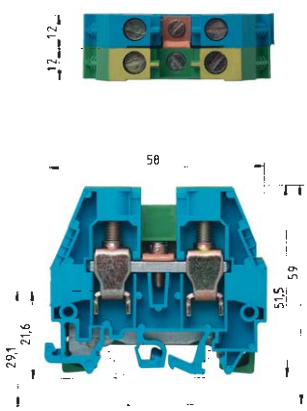


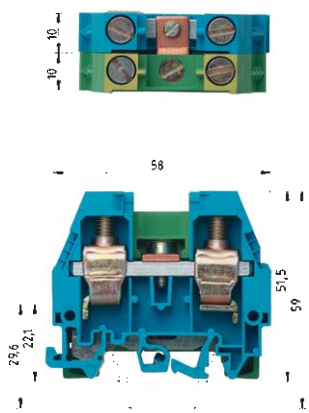


| | | WKI 10 PEN/35 | | | | WKI 16 PEN/35 | | | |
|---|---|---|---|---|---|---|---|---|---|
| | | fine stranded | solid/stranded | V | A | fine stranded | solid/stranded | V | A |
| EN 60 947-7-1, EN 60 947-7-2 | | 1 – 10 mm² | 1.5 – 16 mm² | 400 V/6 kV/3 | 57 | 1 – 16 mm² | 1.5 – 25 mm² | 400 V/6 kV/3 | 76 |
| UL ratings | | No. 16-6 AWG | | 600 V | 65/65 | No. 12-4 AWG | | 600 V | 65/65 |
| CSA ratings | | No. 16-6 AWG | | 600 V | 70 | No. 14-4 AWG | | 600 V | 95 |
| Width | Wire strip length | 20 mm | | | 18 mm | 24 mm | | | 16 mm |
| Approvals | | | | | | | | | |

| | | Type | Part no. | Std. pack | Type | Part no. | Std. pack |
|---|---|---|---|---|---|---|---|
| **PEN assembly block** | Color: green/yellow – blue | WKI 10 PEN/35 | 56.510.9455.0 | 20 | WKI 16 PEN/35 | 56.516.9455.0 | 20 |
| | | | | | | | |
| **Accessories** | | | | | | | |
| 1. Mounting rail TS 35, DIN rail 7.5mm high | L = 2 m | 35 x 27 x 7,5 EN 60715 | 98.300.0000.0 | 1 | 35 x 27 x 7,5 EN 60715 | 98.300.0000.0 | 1 |
| Mounting rail TS 35, DIN rail 15mm high | L = 2 m | 35 x 27 x 15 EN 60715 | 98.360.0000.0 | 1 | 35 x 27 x 15 EN 60715 | 98.360.0000.0 | 1 |
| 2. End clamp for TS 35, with screw | 8 mm wide | 9708/2 S35 | Z5.522.8553.0 | 100 | 9708/2 S35 | Z5.522.8553.0 | 100 |
| End clamp for TS 35, without screws | 8 mm wide | WEF 1/35 | Z5.523.9353.0 | 100 | | | |
| 3. End plate 1.5 mm thick | Color: gray | | | | | | |
| 1.5 mm thick | Color: blue | API 10-16 BLAU | 07.311.9455.6 | 10 | API 10-16 BLAU | 07.311.9455.6 | 10 |
| 1.5 mm thick | Color: green | | | | | | |
| End plate 2 mm thick | Color: gray | | | | | | |
| 2 mm thick | Color: blue | | | | | | |
| 2 mm thick | Color: green | | | | | | |
| 4. Partition plate | Color: gray | | | | | | |
| | Color: blue | | | | | | |
| 5. Cross connector with screws (jumper bar) | 2pole | | | | | | |
| insulated | 3pole | | | | | | |
| | 4pole | | | | | | |
| | 5pole | | | | | | |
| | 6pole | | | | | | |
| 6. Partition plate with marking facility | Color: yellow | TS 10 GELB | 07.311.2353.8 | 10 | TS 16 GELB | 07.311.2453.8 | 10 |
| 7. Cover with marking facility | Color: yellow | AD VB 10 GELB | 04.326.2353.8 | 10 | AD VB 16 GELB | 04.326.2453.8 | 10 |
| 8. Cover with warning symbol over 4 blocks | Color: yellow | | | | | | |
| Cover with warning symbol for 1 block | Color: yellow | ADI 10/1 GELB | 04.325.8553.8 | 10 | AD 16/1 GELB | 04.325.8653.8 | 10 |
| 9. Busbar | | | | | | | |
| E-Cu 10 x 3 mm, tin-plated, $I_N$ = 140 A | L = 1 m | | | | | | |
| E-Cu 10 x 3 mm, unplated, $I_N$ = 140 A | L = 1 m | | | | | | |
| 10. Connector clamp for busbar | | | | | | | |
| 16 mm² | 8.5 mm wide | | | | | | |
| 35 mm² | 17 mm wide | | | | | | |
| 11. Busbar support | 4 mm wide | | | | | | |
| Busbar support | 8 mm wide | | | | | | |
| | | | | | | | |
| Marking accessories see page 48/49 and page 90/91 | | | | | | | |

# selos

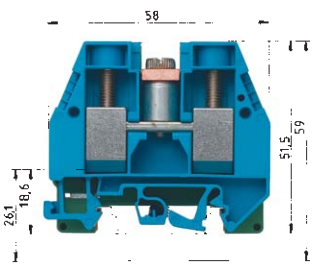


## WKI 35 PEN/35

| fine stranded | stranded | V | A |
|---|---|---|---|
| 16 – 35 mm² | 16 – 50 mm² | 400 V/6 kV/3 | 125 |
| No. 10-2 AWG | | 600 V | 95/95 |
| No. 10-2 AWG | | 600 V | 110 |
| 32 mm | | | 13 mm |

| Type | Part no. | Std. pack |
|---|---|---|
| WKI 35 PEN/35 | 56.535.9455.0 | 10 |
| 35 x 27 x 7,5 EN 60715 | 98.300.0000.0 | 1 |
| 35 x 27 x 15 EN 60715 | 98.360.0000.0 | 1 |
| 9708/2 S35 | Z5.522.8553.0 | 100 |
| API 35 BLAU | 07.311.8855.6 | 10 |
| TS 35 GELB | 07.311.8653.8 | 10 |
| AD 35/1 GELB | 04.325.8753.8 | |

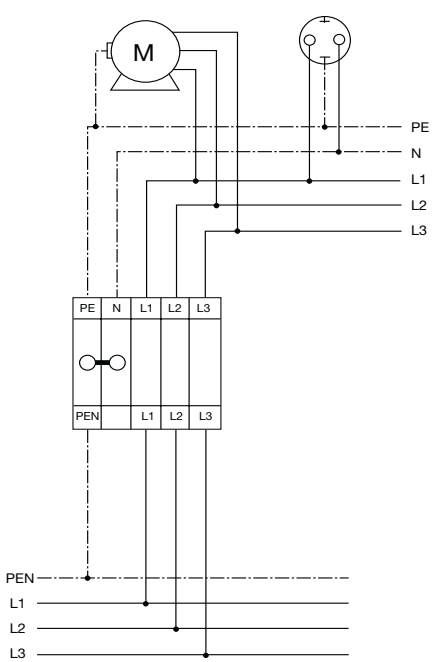


**PEN assembly block for junction box**
**IEC 947-7-2**
**EN 60947-7-2**

Electrical power is often supplied to the plant in a 4 conductor three phase system (L1, L2, L3, and Ground). However, the electrical equipment in the plant may require a 5 conductor three phase system (L1, L2, L3, N, and Ground). Therefore, it is important to have a connection system to accommodate both possibilities.

The Wieland WKI ... PEN/35 system accomplishes this task. The PEN assembly terminal block consists of a ground terminal which is grounded to the DIN rail and a neutral terminal (color coded blue) which is electrically isolated from the DIN rail. The two terminals are commoned via a cross connector (jumper bar) thereby, tying the neutral terminal to ground.

When using the PEN assembly terminal block system, the DIN mounting rail only acts as a grounding bus. Therefore, copper mounting rail is not required and standard zinc plated steel DIN can be used for grounding purposes.

These assemblies have the same symmetry as the corresponding feed through terminals of the WKI series and fit the height required for junction boxes per DIN 43871 when using DIN rail size 35 x 27 x 7.5.

# Accessories for DIN rail Terminal blocks with screw connection for junction boxes

**selos** BIT

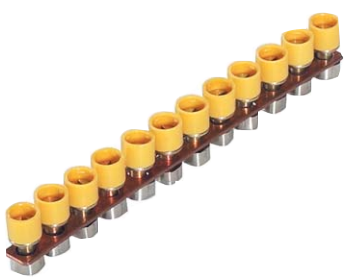

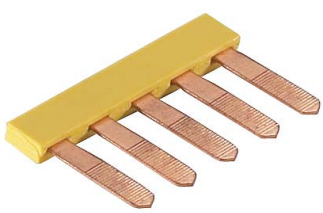

## Cross connectors (jumper bars) for installation blocks

| Type | Part no. | Std. pack |
|---|---|---|
| for terminal blocks type | | |
| | | |
| **WKI 4 D-D** | | |
| **WKI 4 DU** | | |
| **WKI 4 N-D-SL** | | |
| **WKI 4 NT-D-SL... (and variants)** | | |
| **WKI 4 NTN-D-SL** | | |
| **WKI 4 TKG-D-SL** | | |
| **WKI 4 D-D-SL** | | |
| | | |
| **Cross connectors, uninsulated (jumper bars)** | | |
| 2pole 9703/6-2 | Z7.211.0227.0 | 50 |
| 3pole 9703/6-3 | Z7.211.0327.0 | 50 |
| 4pole 9703/6-4 | Z7.211.0427.0 | 50 |
| 5pole 9703/6-5 | Z7.211.0527.0 | 50 |
| 6pole 9703/6-6 | Z7.211.0627.0 | 50 |
| 70pole 9703/6 M-70 | Z7.211.0027.0 | 10 |
| | | |
| **Cross connectors, insulated (jumper bars)** | | |
| 12pole IVB WKI 4-12 | Z7.271.5227.0 | 10 |

## Insulated jumper combs for installation blocks

| Type | Part no. | Std. pack |
|---|---|---|
| for terminal blocks type | | |
| | | |
| **WKI 4 D-D** | | |
| **WKI 4 DU** | | |
| **WKI 4 N-D-SL** | | |
| **WKI 4 NT-D-SL... (and variants)** | | |
| **WKI 4 NTN-D-SL** | | |
| **WKI 4 TGK-D-SL** | | |
| **WKI 4 D-D-SL** | | |
| 0.5 mm thick, 6 mm spacing Color: yellow | | |
| 2pole IVB 0,5 WK 4..-2 | Z7.255.0227.0 | 10 |
| 3pole IVB 0,5 WK 4..-3 | Z7.255.0327.0 | 10 |
| 4pole IVB 0,5 WK 4..-4 | Z7.255.0427.0 | 10 |
| 5pole IVB 0,5 WK 4..-5 | Z7.255.0527.0 | 10 |
| 6pole IVB 0,5 WK 4..-6 | Z7.255.0627.0 | 10 |
| 7pole IVB 0,5 WK 4..-7 | Z7.255.0727.0 | 10 |
| 8pole IVB 0,5 WK 4..-8 | Z7.255.0827.0 | 10 |
| 9pole IVB 0,5 WK 4..-9 | Z7.255.0927.0 | 10 |
| 10pole IVB 0,5 WK 4..-10 | Z7.255.1027.0 | 10 |
| 11pole IVB 0,5 WK 4..-11 | Z7.255.1127.0 | 10 |
| 12pole IVB 0,5 WK 4..-12 | Z7.255.1227.0 | 10 |
| | | |
| 1 mm thick, 6 mm spacing Color: yellow | | |
| 2pole IVB 1 WK 4..-2 | Z7.255.4227.0 | 10 |
| 3pole IVB 1 WK 4..-3 | Z7.255.4327.0 | 10 |
| 4pole IVB 1 WK 4..-4 | Z7.255.4427.0 | 10 |
| 5pole IVB 1 WK 4..-5 | Z7.255.4527.0 | 10 |
| 6pole IVB 1 WK 4..-6 | Z7.255.4627.0 | 10 |
| 7pole IVB 1 WK 4..-7 | Z7.255.4727.0 | 10 |
| 8pole IVB 1 WK 4..-8 | Z7.255.4827.0 | 10 |
| 9pole IVB 1 WK 4..-9 | Z7.255.4927.0 | 10 |
| 10pole IVB 1 WK 4..-10 | Z7.255.5027.0 | 10 |
| 11pole IVB 1 WK 4..-11 | Z7.255.5127.0 | 10 |
| 12pole IVB 1 WK 4..-12 | Z7.255.5227.0 | 10 |

## Cover with warning symbol

| Type | Part no. | Std. pack |
|---|---|---|
| for terminal blocks type | | |
| | | |
| **Cover with warning symbol over 4 blocks** | | |
| | | |
| **WK 4** | | |
| AD 4/4 GELB | 04.343.5856.6 | 10 |
| | | |
| | | |
| **Cover with warning symbol for 1 block** | | |
| | | |
| **WKI 10** | | |
| AD 10/1 GELB | 04.325.8553.8 | 10 |
| | | |
| | | |
| **WKI 16** | | |
| AD 16/1 GELB | 04.325.8653.8 | 10 |
| | | |
| | | |
| **WKI 35** | | |
| AD 35/1 GELB | 04.325.8753.0 | 10 |

# selos

## Uninsulated cross connectors (jumper bars) for feed-through blocks

| Type | Part no. | Std. pack |
|---|---|---|
| for terminal blocks type | | |
| | | |
| **WK 4/U** | | |
| 2pole VB WK 4-2 | Z7.281.0227.0 | 10 |
| 3pole VB WK 4-3 | Z7.281.0327.0 | 10 |
| 4pole VB WK 4-4 | Z7.281.0427.0 | 10 |
| 5pole VB WK 4-5 | Z7.281.0527.0 | 10 |
| 6pole VB WK 4-6 | Z7.281.0627.0 | 10 |
| 70pole VB WK 4 M-70 | Z7.281.0027.0 | 10 |
| | | |
| **WKI 10/U** | | |
| 2pole VB WKI 10-2 | Z7.288.0227.0 | 10 |
| 3pole VB WKI 10-3 | Z7.288.0327.0 | 10 |
| 4pole VB WKI 10-4 | Z7.288.0427.0 | 10 |
| 5pole VB WKI 10-5 | Z7.288.0527.0 | 10 |
| 6pole VB WKI 10-6 | Z7.288.0627.0 | 10 |
| 40pole VB WKI 10 M-40 | Z7.288.0027.0 | 10 |
| | | |
| **WKI 16/U** | | |
| 2pole VB WKI 16-2 | Z7.289.0227.0 | 10 |
| 3pole VB WKI 16-3 | Z7.289.0327.0 | 10 |
| 4pole VB WKI 16-4 | Z7.289.0427.0 | 10 |
| 5pole VB WKI 16-5 | Z7.289.0527.0 | 10 |
| 6pole VB WKI 16-6 | Z7.289.0627.0 | 10 |
| 20pole VB WKI 16 M-20 | Z7.289.0027.0 | 10 |

## Partition plates with marking facility Cover with marking facility

| Type | Part no. | Std. pack |
|---|---|---|
| **Partition plate with marking facility** | | |
| Color: yellow | | |
| for terminal blocks type | | |
| | | |
| **WK 4/U** | | |
| TS 4 YELLOW | | |
| **WKI 10** | | |
| TS 10 YELLOW | | |
| | | |
| **WKI 16** | | |
| TS 16 YELLOW | | |
| | | |
| **WKI 35** | | |
| TS 35 YELLOW | | |
| **Cover with marking facility** | | |
| **for cross connector** | **Color: yellow** | |
| **for terminal blocks type** | | |
| | | |
| **WK 4** | | |
| AD VB 4 YELLOW | | |
| **WKI 10** | | |
| AD VB 10 YELLOW | | |
| **WKI 16** | | |
| AD VB 16 YELLOW | | |

## Insulated cross connectors (jumper bars) for feed-through blocks

| Type | Part no. | Std. pack |
|---|---|---|
| for terminal blocks type | | |
| **WK 4/U** | | |
| 2pole IVB WK 4-2 | Z7.281.1227.0 | 10 |
| 3pole IVB WK 4-3 | Z7.281.1327.0 | 10 |
| 4pole IVB WK 4-4 | Z7.281.1427.0 | 10 |
| 5pole IVB WK 4-5 | Z7.281.1527.0 | 10 |
| 6pole IVB WK 4-6 | Z7.281.1627.0 | 10 |
| 7pole IVB WK 4-7 | Z7.281.1727.0 | 10 |
| 8pole IVB WK 4-8 | Z7.281.1827.0 | 10 |
| 9pole IVB WK 4-9 | Z7.281.1927.0 | 10 |
| 10pole IVB WK 4-10 | Z7.281.2027.0 | 10 |
| 11pole IVB WK 4-11 | Z7.281.2127.0 | 10 |
| 12pole IVB WK 4-12 | Z7.281.2227.0 | 10 |
| | | |
| **WKI 10/U** | | |
| 2pole IVB WKN 10-2 | Z7.283.2227.0 | 10 |
| 3pole IVB WKN 10-3 | Z7.283.2327.0 | 10 |
| 4pole IVB WKN 10-4 | Z7.283.2427.0 | 10 |
| 5pole IVB WKN 10-5 | Z7.283.2527.0 | 10 |
| 6pole IVB WKN 10-6 | Z7.283.2627.0 | 10 |
| | | |
| **WKI 16/U** | | |
| 2pole IVB WKI 16-2 | Z7.284.9227.0 | 10 |
| 3pole IVB WKI 16-3 | Z7.284.9327.0 | 10 |
| 4pole IVB WKI 16-4 | Z7.284.9427.0 | 10 |
| 5pole IVB WKI 16-5 | Z7.284.9527.0 | 10 |
| 6pole IVB WKI 16-6 | Z7.284.9627.0 | 10 |
| | | |
| **WKI 35/U** | | |
| 2pole IVB WKI 35-2 | Z7.285.4227.0 | 5 |
| 3pole IVB WKI 35-3 | Z7.285.4327.0 | 5 |
| 4pole IVB WKI 35-4 | Z7.285.4427.0 | 5 |
| 5pole IVB WKI 35-5 | Z7.285.4527.0 | 5 |
| 6pole IVB WKI 35-6 | Z7.285.4627.0 | 5 |

# Accessories for DIN rail terminal blocks for junction boxes

# *fasis* BIT
# *selos* BIT

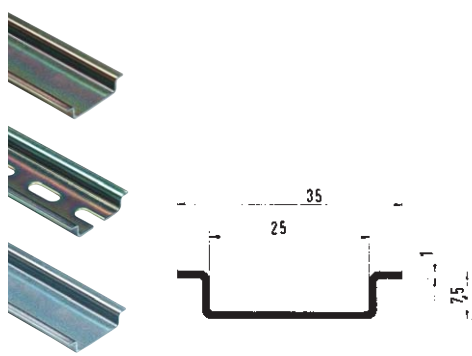


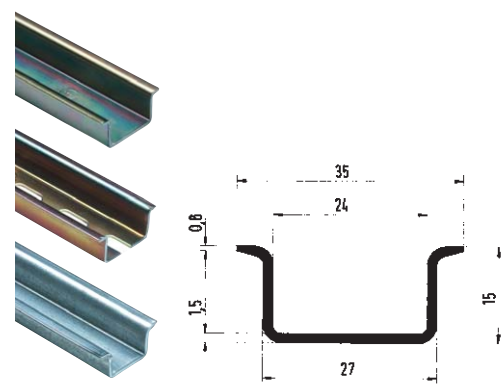


**Mounting rail 35 x 7.5**
accord. to DIN EN 60715

**Mounting rail 35 x 15**
accord. to DIN EN 60715

| | | | Type | Part no. | Std. pack | | Type | Part no. | Std. pack | |
|---|---|---|---|---|---|---|---|---|---|---|
| **Mounting rail** | | | | | | | | | | |
| | | | | | | | | | | |
| 1. Steel, galv. zinc-plated and dichromated,unslotted | | L = 2 m | 35 x 27 x 7.5 EN 60715 | 98.300.0000.0 | 1 | | 35 x 27 x 15 EN 60715 | 98.370.0000.0 | 1 | |
| Steel, galv. zinc-plated and dichromated,slotted | | L = 2 m | 35 x 27 x 7.5 EN 60715 slotted | 98.300.1000.0 | 1 | | 35 x 27 x 15 EN 60715 | 98.370.1000.0 | 1 | |
| 2. Steel, unplated | unslotted | L = 2 m | 35 x 27 x 7.5 EN 60715 unplated | 98.300.0010.0 | 1 | | | | | |
| Steel, unplated | slotted | L = 2 m | | | | | | | | |
| 3. Steel, hot-galvanized | unslotted | L = 2 m | | | | | | | | |
| Steel, hot-galvanized | slotted | L = 2 m | | | | | | | | |
| 4. E copper | unslotted | L = 2 m | | | | | | | | |
| E copper | slotted | L = 2 m | | | | | | | | |
| 5. Aluminium | unslotted | L = 2 m | | 98.750.0000.0 | 1 | * | | | | |
| | slotted | L = 1 m | | 98.800.1000.0 | 1 | * | | | | |
| 6. Stainless steel | unslotted | L = 2 m | | 98.330.0000.0 | 1 | * | | | | |
| | | | *available in North America only | | | | | | | |
| | | | | | | | | | | |
| **End clamp** | | | | | | | | | | |
| | | | | | | | | | | |
| 5. End clamp for TS 35, with screw | | 8 mm wide | | | | | | | | |
| | | | | | | | | | | |
| 6. End clamp for TS 35, with screw | | 8/17.5 mm wide | | | | | | | | |
| with marking facility | | | | | | | | | | |
| for block assemblies | | | | | | | | | | |
| | | | | | | | | | | |
| 7. End clamp for TS 35, screwless | | 8 mm wide | | | | | | | | |
| | | | | | | | | | | |
| 8. End clamp for TS 35, screwless | | 8/17.5 mm wide | | | | | | | | |
| with marking facility | | | | | | | | | | |
| for block assemblies | | | | | | | | | | |
| | | | | | | | | | | |
| 9. Marking card in perforated sheets | | | | | | | | | | |
| (1 sheet = 100 single tags) | | | | | | | | | | |

# fasis



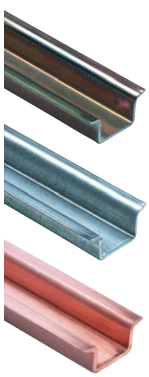

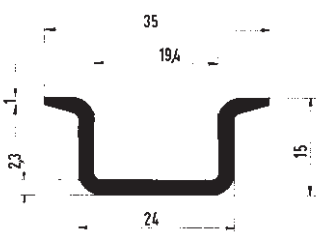

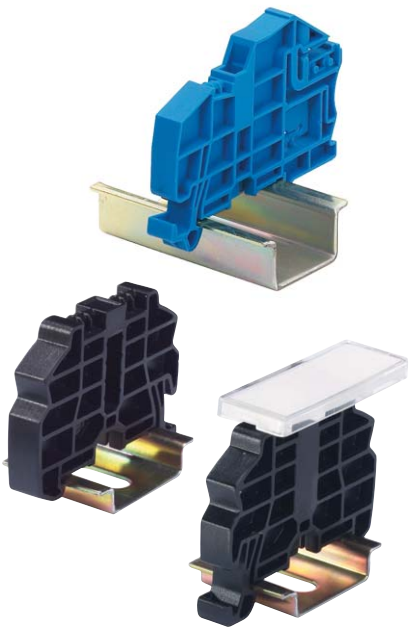

**Mounting rail 35 x 15**
accord. to DIN EN 60715

| Type | Part no. | Std. pack |
|---|---|---|
| 35 x 27 x 15 EN 60715 | 98.360.0000.0 | 1 |
| 35 x 27 x 15 EN 60715 ZN | 98.360.0004.0 | 1 |
| 35 x 27 x 15 EN 60715 CU | 98.380.0000.0 | 10 |

**End clamp for TS 35**
fixed with screw

| Type | Part no. | Std. pack |
|---|---|---|
| 9708/2 S 35 | Z5.522.8553.0 | 100 |
| 9708/2 BS/35 | 69.920.0553.0 | 100 |
| | 04.019.0289.0 | 10 |

**End clamp for TS 35**
fixed without screw

| Type | Part no. | Std. pack |
|---|---|---|
| WEF 1/35 | Z5.523.9353.0 | 100 |
| WEF 1 BS/35 | 69.920.1053.0 | 100 |
| WKIF SH/E/35 | Z1.108.8453.0 | 10 |
| BS/R | Z4.243.8453.0 | |
| | 04.019.0289.0 | 10 |

# Marking accessories for DIN rail terminal blocks for junction boxes

# *fasis* BIT
# *selos* BIT

Material:
Polyamide 66/6
Color: black figures on white background

DIN rail terminal blocks, type WKF, can take in marking tags on both sides on top of the block in a 3-chamber slot. It can be either 3 single number tags from the tear-off marking strip , or single tags, or marking strips.

1. **Marking strips** marked and unmarked, made from Polyamide 66/6, suitable for10 blocks in a row.

   Marking 1-10, 11-20 etc. up to 991-999.
   Type 9705 A/5/10 (5 mm spacing)
   for terminal blocks type WKIF 2.5...
   Type 9705 A/6/10 (6 mm spacing)
   for terminal blocks type WK/WKF 4...
   Type 9705 A/5/10/5 B (10 mm spacing)
   for terminal blocks type WKI/WKF 10...
   Type 9705 A/6/10/5 B (12 mm spacing)
   for terminal blocks type WKI/WKIF 16...
   Type 9705 A/8/10/5 B (16 mm spacing)
   for terminal blocks type WKI 35...

2. **Tear-off marking strip** with 10 marking tags, made from Polyamide 66/6, white, marked and unmarked.

   This marking system considerably reduces the time required for marking terminal block rows. For numerical marking of terminal block rows only 11 stock positions are required. As the time used for picking and attaching the tags is reduced, and as stockkeeping is low and the prices extremely favorable , enormous cost savings are the result from using these tear-off marking strips.

   Type 9704 A...
   (see page 180)

3. **Single marking tag** made from white Polyamide 66/6, marked and unmarked.
   Type 9705 A...

## Marking computer in system kit

| Type | Part no. | Std. pack |
|---|---|---|
| **Marking computer for markingcards** | | |
| marcom 2 | 95.502.0000.0 | 1 |
| **Description** | | |
| ***wieland marcom 2*** is a freely programmable marking computer for marking tags of DIN rail terminal blocks, pluggable connectors, cables and switching devices. The program technology with flexible menu control produces excellent results requiring only few input. Entry of a sequence of figures is automatically limited by the parameters of the selected marking tags, making wrong print-out impossible. Repeated operations can be saved as so-called JOBs and are therefore immediately available for print-out without further entries. The computer disposes of a large number of fonts, with numerical, alphanumerical (small/capital letters) and symbolic characters. **marcom 2** is powered by an attached power supply. For a mains-independent operation, the **marcom 2** Power Pack is available. | | |
| Marking tag plates for ***marcom 2*** | | |
| 9705 A/5/10/11 marcom | Z4.242.5053.0 | 10 |
| 9705 AL/5/10/6 marcom | Z4.242.5153.0 | 10 |
| 9705 A/6/10/11 marcom | Z4.242.6053.0 | 10 |
| 9705 AL/6/10/6 marcom | Z4.242.6353.0 | 10 |
| 9705 A/8/10/7 marcom | Z4.242.8053.0 | 10 |

## All terminal block widths

| Type | Part no. | Std. pack |
|---|---|---|
| **Single marking tag, unmarked** | | |
| 9705 A | 04.242.0850.0 | 500 |
| **Single marking tag, marked** | | |
| 9705 AB* | 04.842.0850.0 | 500 |
| **Single marking tag, unmarked with enlarged marking area** | | |
| 9705 AL | 04.242.1553.0 | 500 |
| **Single marking tag, marked for enlarged marking area** | | |
| 9705 ALB | 04.842.1553.0 | 500 |

*Custom marking upon request

# fasis

## 2,5 mm²/5 mm Width

| Type | | Part no. | Std. pack |
|---|---|---|---|
| **Marking strips, unmarked** | | | |
| 9705 A/5/10 | | 04.242.5053.0 | 25 |
| | | | |
| **Marking strips, marked** | | | |
| 9705 A/5/9 B | 1 - 9 | 04.842.4953.0 | 25 |
| 9705 A/5/10 B* | | 04.842.5053.0 | 25 |
| 9705 A/5/10 B | 1 - 10 | 04.845.0153.0 | 25 |
| | 11 - 20 | 04.845.0253.0 | 25 |
| | 21 - 30 | 04.845.0353.0 | 25 |
| | 31 - 40 | 04.845.0453.0 | 25 |
| | 41 - 50 | 04.845.0553.0 | 25 |
| | 51 - 60 | 04.845.0653.0 | 25 |
| | 61 - 70 | 04.845.0753.0 | 25 |
| | 71 - 80 | 04.845.0853.0 | 25 |
| | 81 - 90 | 04.845.0953.0 | 25 |
| | 91 - 100 | 04.845.1053.0 | 25 |
| | | | |
| | ⏚ (10 x) | 04.855.0053.0 | 25 |
| | ⏚ (10 x) | 04.855.0153.0 | 25 |
| | + (10 x) | 04.855.0253.0 | 25 |
| | – (10 x) | 04.855.0353.0 | 25 |
| | L1 (10 x) | 04.855.0453.0 | 25 |
| | L2 (10 x) | 04.855.0553.0 | 25 |
| | L3 (10 x) | 04.855.0653.0 | 25 |
| | PE (10 x) | 04.855.0753.0 | 25 |
| | SL (10 x) | 04.855.3153.0 | 25 |
| | N (10 x) | 04.855.3253.0 | 25 |
| | F1 (10 x) | 04.855.0953.0 | 25 |
| | F2 (10 x) | 04.855.1053.0 | 25 |
| L1, L2, L3, N, PE | (2 x) | 04.855.0853.0 | 25 |
| | | | |
| with enlarged marking area | | | |
| 9705 AL/5/10 | | 04.242.5153.0 | 25 |
| *Custom marking upon request | | | |

## 4 mm²/6 mm Width

| Type | | Part no. | Std. pack |
|---|---|---|---|
| **Marking strips, unmarked** | | | |
| 9705 A/6/10 | | 04.242.6053.0 | 25 |
| | | | |
| **Marking strips, marked** | | | |
| 9705 A/6/9 B | 1 - 9 | 04.842.5953.0 | 25 |
| 9705 A/6/10 B* | | 04.842.6053.0 | 25 |
| 9705 A/6/10 B | 1 - 10 | 04.846.0153.0 | 25 |
| | 11 - 20 | 04.846.0253.0 | 25 |
| | 21 - 30 | 04.846.0353.0 | 25 |
| | 31 - 40 | 04.846.0453.0 | 25 |
| | 41 - 50 | 04.846.0553.0 | 25 |
| | 51 - 60 | 04.846.0653.0 | 25 |
| | 61 - 70 | 04.846.0753.0 | 25 |
| | 71 - 80 | 04.846.0853.0 | 25 |
| | 81 - 90 | 04.846.0953.0 | 25 |
| | 91 - 100 | 04.846.1053.0 | 25 |
| | | | |
| | ⏚ (10 x) | 04.856.0053.0 | 25 |
| | ⏚ (10 x) | 04.856.0153.0 | 25 |
| | + (10 x) | 04.856.0253.0 | 25 |
| | – (10 x) | 04.856.0353.0 | 25 |
| | L1 (10 x) | 04.856.0453.0 | 25 |
| | L2 (10 x) | 04.856.0553.0 | 25 |
| | L3 (10 x) | 04.856.0653.0 | 25 |
| | PE (10 x) | 04.856.0753.0 | 25 |
| | SL (10 x) | 04.856.3153.0 | 25 |
| | N (10 x) | 04.856.3253.0 | 25 |
| | F1 (10 x) | 04.856.0953.0 | 25 |
| | F2 (10 x) | 04.856.1053.0 | 25 |
| L1, L2, L3, N, PE | (2 x) | 04.856.0853.0 | 25 |
| | | | |
| with enlarged marking area | | | |
| 9705 AL/6/10 | | 04.242.6353.0 | 25 |
| *Custom marking upon request | | | |

## 10 mm²/10 mm Width

## 16 mm²/12 mm Width

## 35 mm²/16 mm Width

| Type | | Part no. | Std. pack |
|---|---|---|---|
| **10 mm²/10 mm Width** | | | |
| **marked for 5 blocks (every 2nd tag) *** | | | |
| 9705 A/5/10/5 B | | 04.842.5553.0 | 25 |
| **16 mm²/12 mm Width** | | | |
| **marked for 5 blocks (every 2nd tag) *** | | | |
| 9705 A/6/10/5 B | | 04.842.6553.0 | 25 |
| **35 mm²/16 mm Width** | | | |
| **marked for 5 blocks (every 2nd tag) *** | | | |
| 9705 A/8/10/5 B | | 04.842.8553.0 | 25 |
| * indicate required marking with part no. | | | |

# DIN rail terminal blocks with screw connection, type *WKN*

***selos***

**Rising cage clamp connection** **up to 150 mm2**

**Standard DIN rail terminal blocks**

**Fuse blocks**

**Disconnect blocks**

**Duo feed through blocks / multi-tier blocks**

**Initiator / actuator blocks**

**Micro modular feed through blocks for TS 35**

***selos*** accord. to US standard UL 94 V-0

- Elastic clamping body
- Rated cross section: 2.5 to 150 $mm^2$
- Connection range: 0.5 to 185 $mm^2$
- Universal foot

All Wieland Components which require CE general certification are CE certified, and identified with the CE logo.

selos

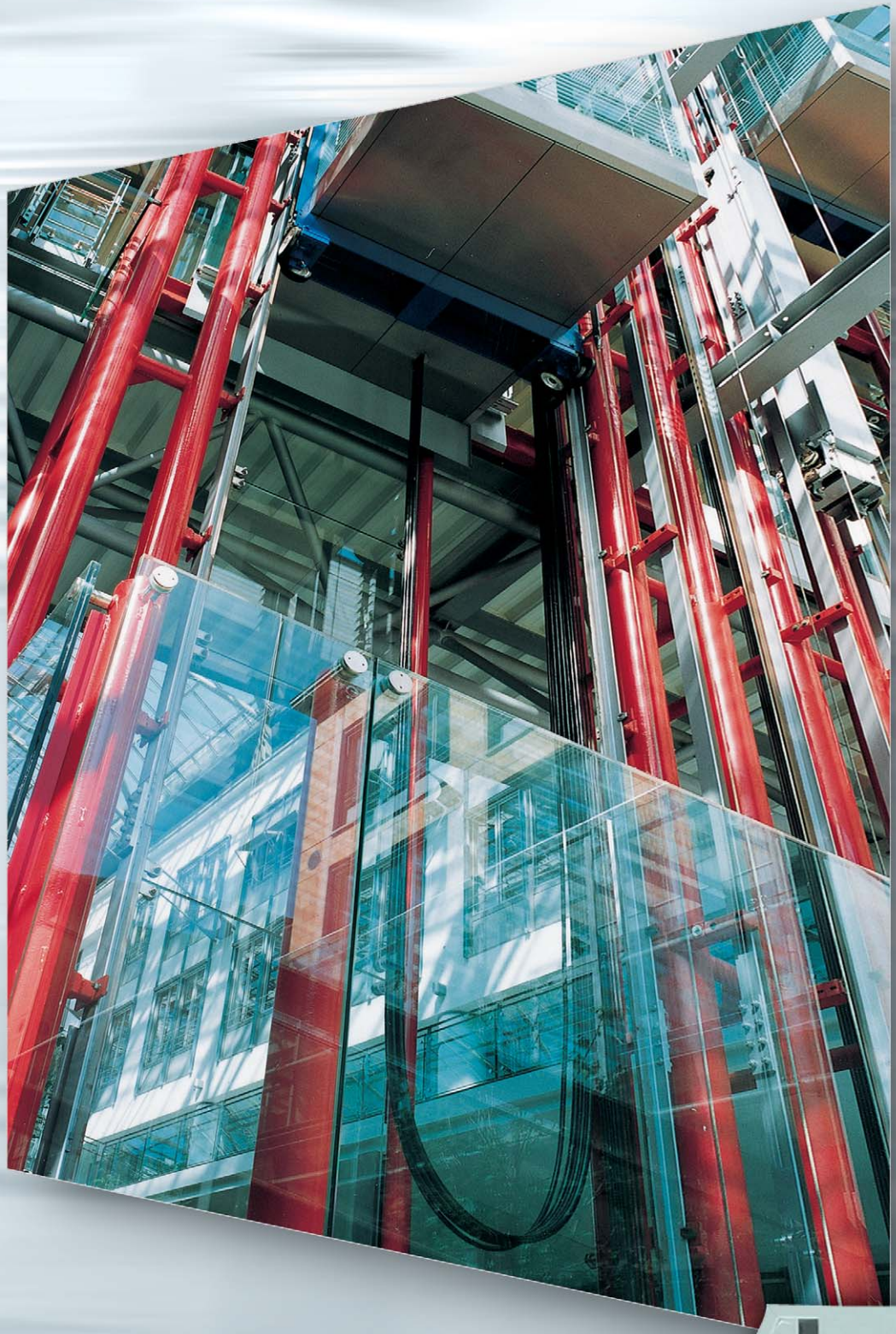

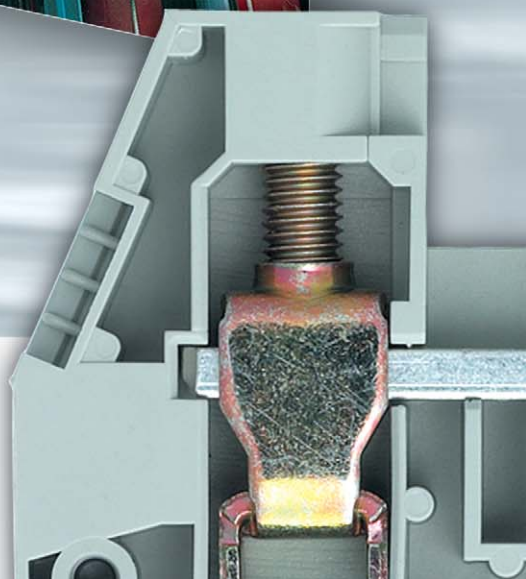

# DIN Rail Terminal Blocks

## Screw Connection, Type *WKN*

# DIN rail terminal blocks with screw connection, type *WKN*

**selos**

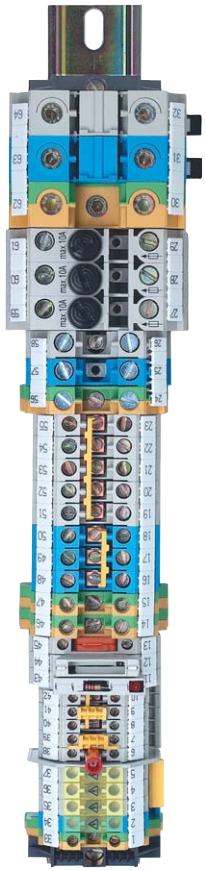

| | 2.5 mm² (12 AWG) | 4 mm² (10 AWG) | 6 mm² (8 AWG) | 10 mm² (6 AWG) | 16 mm² (4 AWG) |
|---|---|---|---|---|---|
| Feed-through blocks<br>2,5-150mm²<br>12 AWG – 350 MCM | | | | | |
| 2,5-150mm²<br>12 AWG – 350 MCM | | | | | |
| Neutral disconnect blocks | | | | | |
| Ground blocks | | | | | |

## Standard DIN rail terminal blocks with rising

Disconnect lever fuse block

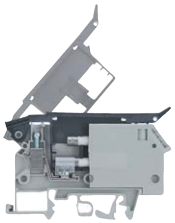

Fuseblock

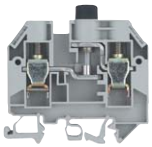

with indicator

Feed-through block

## Fuse blocks

Disconnect block with diode plug

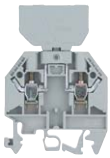

Disconnect-block with fuse holder

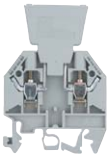

Knife edge disconnect block

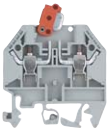

Invertible plug disconnect block

Feed-through block

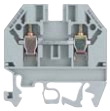

## Disconnect blocks

35 mm² (2 AWG) | 70 mm² (2/0 AWG) | 150 mm² (350 MCM)

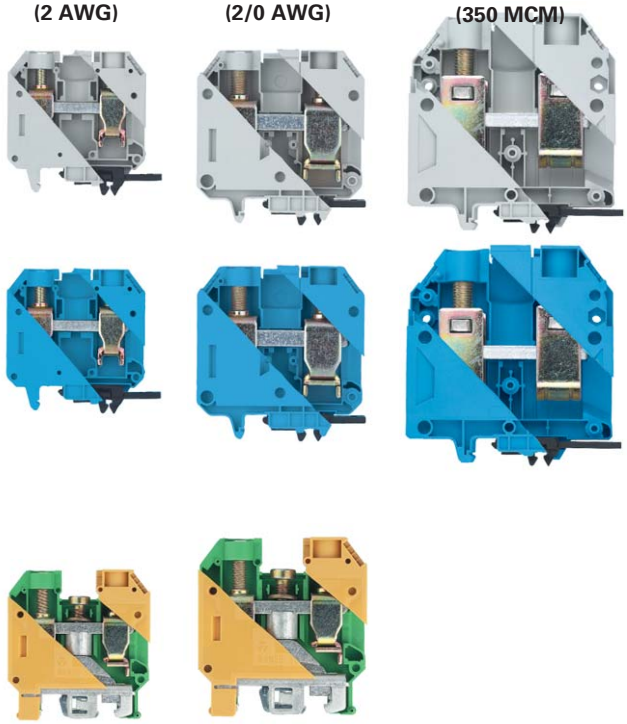

## cage clamp

## Connector clamps for busbars

| | 4 mm² (10 AWG) | | 4 mm² (10 AWG) |
|---|---|---|---|
| D1/2 | | | |
| D2/2 | 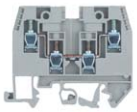 | E | |
| D/E | 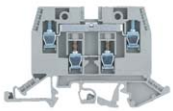 | E/V B | |
| D2/2SL | | E/SL | |

## Duo feed-through blocks

## Multi-tier blocks

| | 2.5 mm² (12 AWG) | 4 mm² (10 AWG) |
|---|---|---|
| Feed-through block with solder connection | | |
| Feed-through block | | |
| Groundblock | | |

## Micro modular feed through blocks TS15

Three-tier feed-through block

Four-tier feed-through blocks

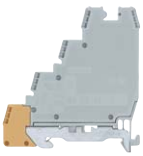

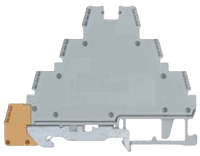

## Initiator and actuator blocks

# DIN rail terminal blocks with screw connection, type *WKN*

**selos**

**WKN provides ...**

❒ Rising cage clamp technology

❒ **Elastic clamping body**

❒ **One piece threaded collar**

**Application advantages**

→ Low contact resistance due to large surface area

→ High and stable contact force

→ **Vibration proof contact** – low maintenance

→ **Guaranteed functionality,** even after repeated tightening and loosening of the screws

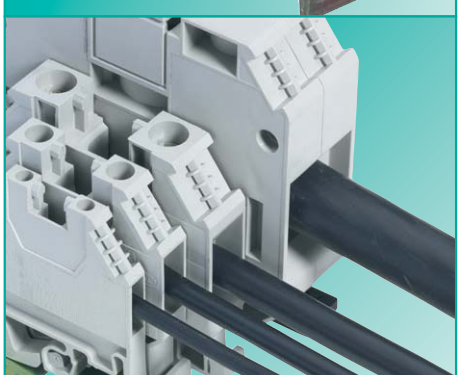

❒ **Rated cross section**
2.5 – 150 mm$^2$
12 AWG – 350 MCM

❒ **Connection range**
0.5 – 185 mm$^2$
24 AWG – 350 MCM

→ Solid, fine stranded and stranded wires can be connected to the WKN terminal blocks **without the use of ferrules**

→ If ferrules are used, the rated cross section does not have to be reduced

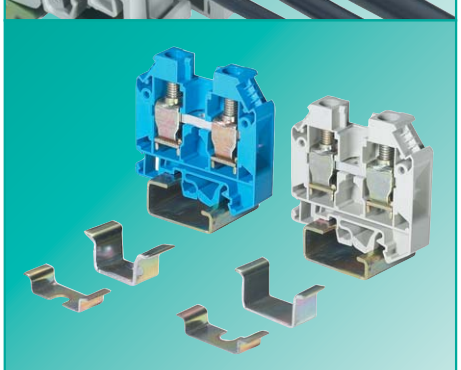

❒ **Universal foot** for
– TS35 accord. to DIN 60715
– TS32 accord. to DIN 60715

❒ Terminal is centered on the rail.

→ One terminal for all common mounting rails

→ Error free mounting foot provides clear identification of terminals mounted incorrectly

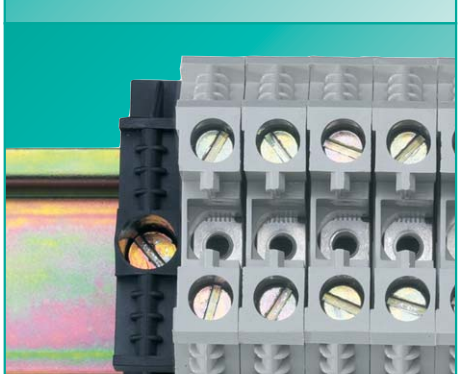

❒ Guided screwdriver access

→ **Mounting safety**

→ When pneumatic or electric screwdrivers are used, the screwdriver guide prevents the blade from slipping of the screw head.

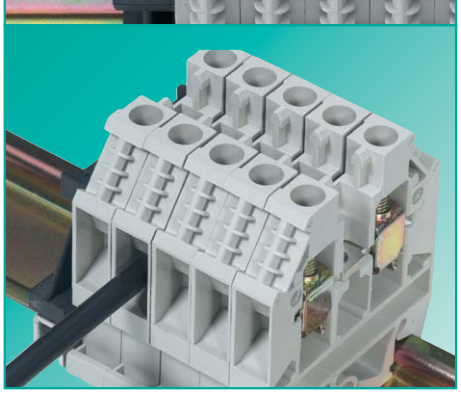

❒ 4-sided **Funneled wire entry**

→ **Safe and rapid installation of the wire**

→ Stranded and fine stranded wires can easily be inserted in the terminal block even without ferrules

→ Reduces installation time

❒ The terminal blocks are delivered the **clamping body** in the open position

# selos



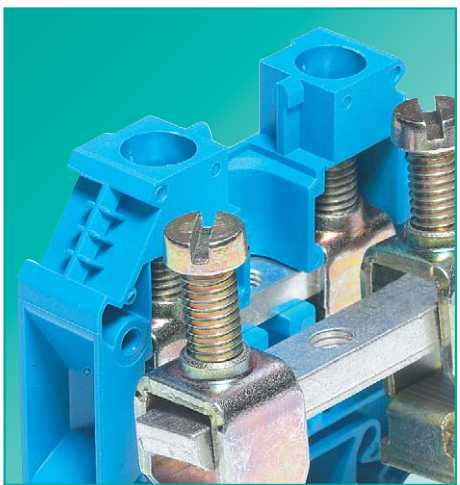

❒ **Captive hardware**

→ The clamping screws are securely **held** within the insulating housing.

→ Tapered plastic fins in the screw turret grip the screw head to ensure a secure connection

→ The screw design prevents the screw from comming out of the clamping body. Turning the screwdriver counter clockwise will cause the screw to spin in the idle position. This guarantees safe installation when using
pneumatic or electric screwdrivers.

**Material**

❒ Special alloys and surface treatment

❒ Low contact resistance

❒ High resistance to corrosion

Metal parts:

❒ Current carrying bar: tin pated; brass or copper

❒ Clamping body and clamping screws: steel, zinc-plated and dichromated

Insulating housing:

❒ Use of Polyamide 66/6 for its excellent chemical and mechanical properties (for more information see section ***facts*** & DATA)

❒ Material accord. to US standard UL 94-V0

Accessories:

❒ Stamped components: bright copper

❒ Test bolts and switchable connecting links: galvanized copper alloy

**DQS certificates for all product families**

❒ Quality standard as per DIN ISO 9001 in Development, Production, Assembly

❒ Continued control of the quality standard by means of regular internal and external quality audits

❒ Compatible with certificates of other countries:

– BSI Certificate, Great Britain
– SQS Certificate, Switzerland
– Aib-Vincotte Certificate, Belgium
– ÖQS Certificate, Austria

Various German and international approvals are available for feed-through terminal blocks. They are indicated in detail on the corresponding product pages. The feed-through blocks of series WK/WKN are approved for the increased-safety type of protection Eex "e" accord. to DIN EN 50019/VDE 0170/0171 part 6 where indicated. No type test is required for the Eex "i" type of protection.

ZERTIFIZIERTES DIN ISO 9001 DQS QUALITÄTSSICHERUNGSSYSTEM Reg.-Nr. 14 194-02 wieland

You can use our **wieplan** software to configure your own terminal block assemblies
(see page 10/11).

**Note:**

The information regarding cross sectional area and connection types pertains to unprepared wires without ferrules.

The voltage ratings apply to the terminals in their intended application. When different products are mounted adjacent to each other, the proper isolation distances must be adhered to. For this purpose, **Wieland** offers a large selection of appropriate accessories.

A detailed description of technical data, the standards' requirements, and the application conditions can be found in part ***facts*** & DATA.

# DIN rail terminal blocks with screw connection, type *WKN*

**selos**

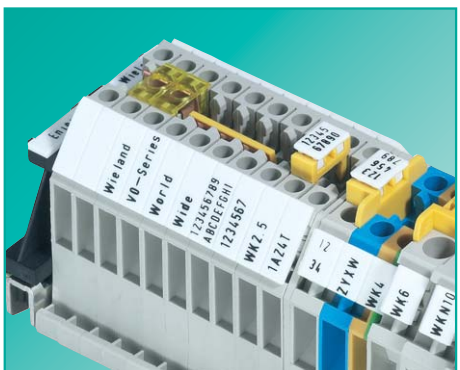


### Marking accessories

- ❒ Single marking tags to match the terminal block spacing
- ❒ Snap-on marking strips (10 individual marking tags per strip) for rapid marking
- ❒ Tear-off marking strips marking up to 3-digits per terminal block
- ❒ Custom marking upon request

### Cross connection (jumpering)

- ❒ Potential commoning can be achieved by means of cross connectors (jumpers) or jumper bars
- ❒ Insulated and uninsulated cross connectors are available in 2-12 pole configuration. Uninsulated versions are also available in larger pole configurations which can be cut to order.
- ❒ **Cross connectors** (jumpers) are mounted in the center thread of the current carrying bar
- ❒ They are preassembled for easy installation and the screws are secured against accidental loosening.
- ❒ In order to keep the rated voltage, end plates partitions or partition plates must be used
- ❒ Terminal blocks of different potentials must be mounted in staggering order

### Jumper combs

- ❒ Number of poles: 2 to 12; with cut-to-order strips higher pole configurations can be achieved
- ❒ When using **jumper combs** you must insert the comb and the wire together in the clamping body
- ❒ AWG must be reduced to the next size when using jumper combs
- ❒ All insulated cross connectors IVB WK... and insulated jumper combs IVK WK... are protected against accidental contact accord. to VBG 4

### Cover with warning symbol

- ❒ Cover with warning symbol to snap on to blocks which remain live when the main switch is disconnected (VDE 0113)
- ❒ The cover can only be removed with a screwdriver

### Partition plates

- ❒ Full rated voltage is maintained when using partition plate with cross connectors (jumpers).
- ❒ Can be installed post assembly
- ❒ The partition plates can only be removed with a screwdriver
- ❒ The cross connector covers protect the user against accidental contact
- ❒ Various marking options are available with the standard Wieland marking system

# selos



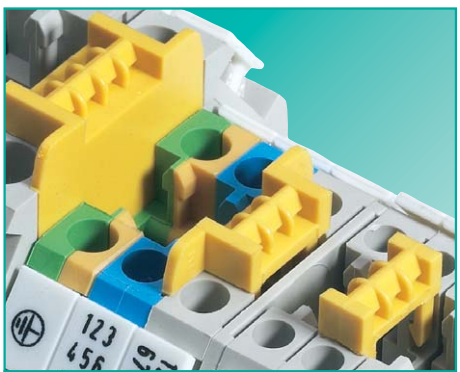

**Protection against accidental contact for cross connectors**

In addition to the partition plates you can use covers to protect the uninsulated cross connectors against accidental contact. They snap on tight and can be marked with the Wieland marking accessories.

**Switchable connecting links**

- ❒ Shorts two terminals together and provides a separable connection
- ❒ Mounted to the center thread of the current carrying bar on the terminal blocks

**Test sockets**

**Test plugs**

**Shorting plug**

- ❒ Stud bolts for test plugs and cross connector plugs are mounted on the center thread of the current carrying bar on the terminal blocks
- ❒ Test plugs with locking levers can be snapped together in any pole configuration

**Partition plates**

**End plates**

- ❒ Partition plates optically separate different terminal block groups, and are required to keep the air and creepage distances when cross connectors of different potentials are mounted adjacent to each other
- ❒ For safety reasons the partitions are constructed in a way that they can only be removed together with the neighboring terminal block

You can use our **wieplan** software to design your own terminal block assemblies
(see page 10/11).

# DIN rail terminal blocks with screw connection, type *WKN*

**selos**

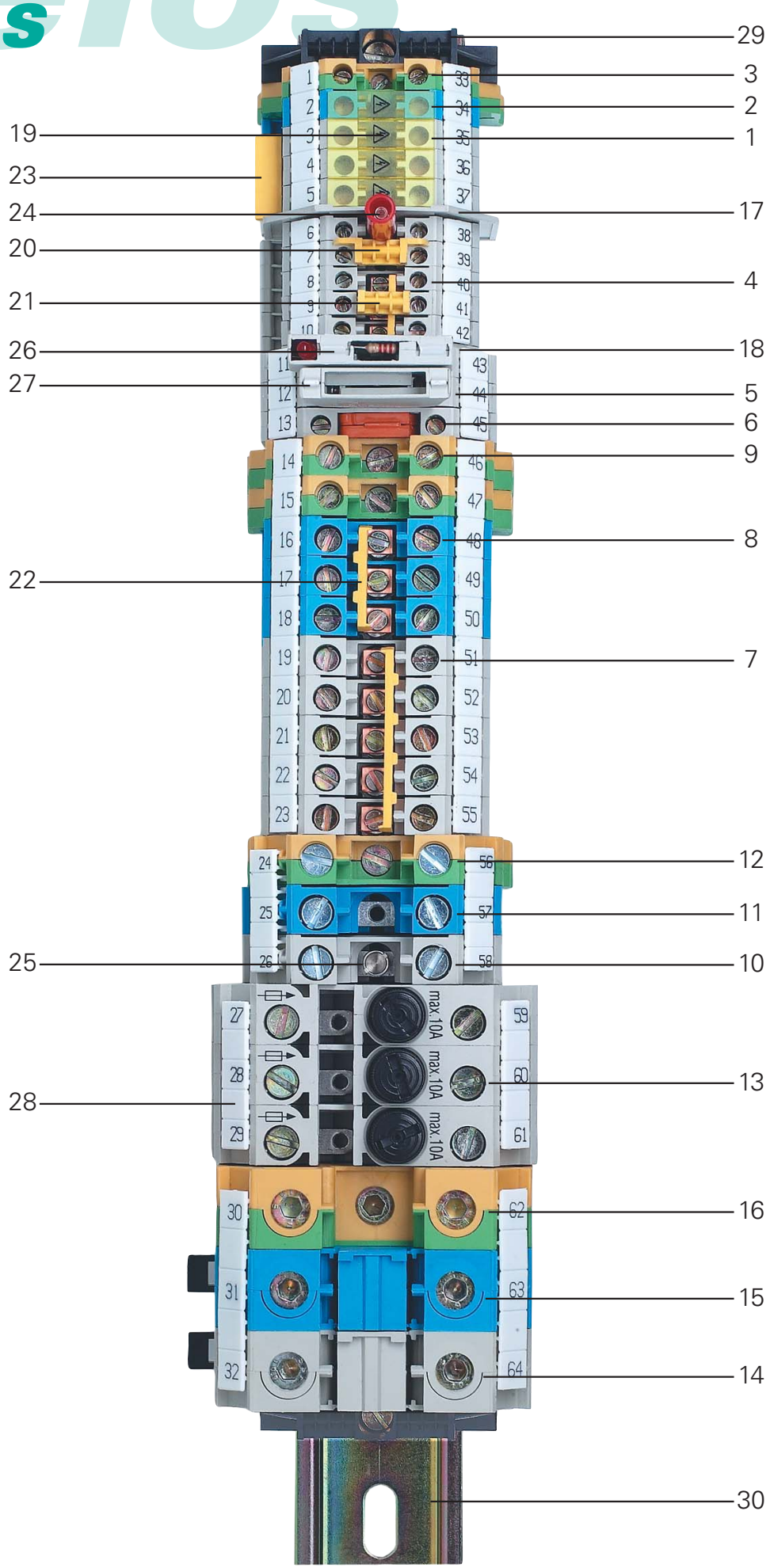

# selos



| Item | Description | Type | Part number |
|---|---|---|---|
| 1 | Feed through block | WK 4/U | 57.504.0055.0 |
| 2 | Feed-through block, blue | WK 4/U BLAU | 57.504.0055.6 |
| 3 | Ground block | WK 4 SL/U | 57.504.9055.0 |
| 4 | Feed through block | WK 2,5/U | 57.503.0055.0 |
| 5 | Disconnect block | WK 4 TKG/U | 57.504.4055.0 |
| 6 | Knife edge disconnect block | WK 4 TKM/U | 57.504.2055.0 |
| 7 | Feed through block | WK 6/U | 57.506.0055.0 |
| 8 | Feed-through block, blue | WK 6/U BLAU | 57.506.0055.6 |
| 9 | Ground block | WK 6 SL/U | 57.506.9055.0 |
| 10 | Feed through block | WKN 10/U | 57.510.0155.0 |
| 11 | Feed-through block, blue | WKN 10/U BLAU | 57.510.0155.6 |
| 12 | Ground block | WKN 10 SL/U | 57.510.9055.0 |
| 13 | Fuse block | WK 10 SI/U 5x20 | 57.910.5055.0 |
| 14 | Feed through block | WKN 35/U | 57.535.0155.0 |
| 15 | Feed-through block, blue | WKN 35/U BLAU | 57.535.0155.6 |
| 16 | Ground block | WKN 35/U | 57.535.9055.0 |
| 17 | Partition | TW 2,5-4 | 07.311.1155.0 |
| 18 | End plate | AP 2,5-4 | 07.311.0155.0 |
| 19 | Cover strip with warning symbol | AD VB 6/4 GELB | 04.343.4856.8 |
| 20 | over 4 blocks | TS 2,5 GELB | 07.311.2053.8 |
| | Partition plate, yellow | | |
| 21 | Single cover for cross conn. with mark. facil. | AD VB 2,5 GELB | 04.326.2053.8 |
| 22 | Cross connector with screws, insulated | IVB WK 6-3 | Z7.282.2327.0 |
| 23 | Jumper comb, insulated | IVB 0,5 WK 4-3 | Z7.255.0327.0 |
| 24 | Test plug | ST 2/2,3 | Z5.553.2921.0 |
| 25 | Stud bolt for test plug | 9011B | 05.508.3221.0 |
| 26 | Fuse holder with indicator | SIST LED | Z1.299.4155.0 |
| 27 | Diode plug, without contacts | DIST | Z1.299.3155.0 |
| 28 | Marking strip | 9705 A/8/10 B | 04.842.0153.0 |
| 29 | End clamp with U-foot | WE 1/U | Z5.523.5753.0 |
| 30 | Mounting rail | 35 x 27 x 7,5 slotted | 98.300.0000.0 |

# Feed-through blocks
# type *WK/ WKN*

selos

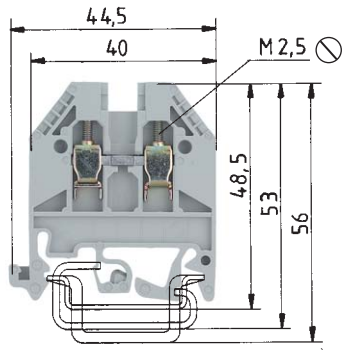


## WK 2,5/U

| | | fine stranded | solid | V | A |
|---|---|---|---|---|---|
| EN 60 947-7-1/DIN VDE 0611T1 | | 0.5 – 2.5 mm² | 0.5 – 4 mm² | 800 V/8 kV/3 | 24 |
| UL-ratings | field/factory wiring | No. 22-12 AWG | | 600 V | 20/30 |
| CSA ratings | | No. 24-12 AWG | | 600 V | 25 |
| Width | Wire strip length | 5 mm | | | 9 mm |
| Approvals | | SEV-EEX, LR LCIE, * ** BKI-EEx | | | |

## Mounting instructions for EEx e applications

– If feed-through blocks are mounted directly adjacent to feed-through blocks of a different size, or directly adjacent to ground blocks, the open side of a group of the same type of blocks has to be covered by an end plate or partition.

– If neighboring terminal blocks are jumpered by a cross connector, the required isolation distances have to be maintained by inserting either a snap-in partition plate (without increasing pitch), an end plate, or a partition between the different block groups, in front of or behind the cross-connected terminal block group.

| | | Type | Part no. | Std. pack |
|---|---|---|---|---|
| **Feed through block** | Color: gray | WK 2,5/U | 57.503.0055.0 | 100 |
| **Feed-through block EEx i** | Color: blue | WK 2,5/U BLAU | 57.503.0055.6 | 100 |
| **Feed-through block EEx e[1)]** | Color: gray | WK 2,5/U [2)] | 57.503.0055.0 | 100 |
| | | | | |
| **Accessories** | | | | |
| 1. Mounting rail TS 35, DIN rail 7.5mm high | L = 2 m | 35 x 27 x 7,5 EN 60715 | 98.300.0000.0 | 1 |
| Mounting rail TS 35, DIN rail, 15mm high | L = 2 m | 35 x 24 x 15 EN 60715 | 98.360.0000.0 | 1 |
| Mounting rail TS 32, G rail | L = 2 m | 9006 EN 60715 G-32 | 98.190.0000.0 | 1 |
| 2. End clamp with U-foot | 10 mm wide | WE 1/U | Z5.523.5753.0 | 100 |
| End clamp TS 35, with screw | 8 mm wide | 9708/2 S35 | Z5.522.8553.0 | 100 |
| End clamp TS 32, with screw | 7.5 mm wide | 9708 | Z5.522.7053.0 | 100 |
| 3. End plate, 1.5 mm thick | Color: gray | AP 2,5 - 4 | 07.311.0155.0 | 10 |
| | Color: blue | AP 2,5 - 4 BLAU | 07.311.0155.6 | 10 |
| End plate, 2 mm thick | Color: gray | | | |
| | Color: blue | | | |
| 4. Partition, 1.5 mm thick | Color: gray | TW 2,5 - 4 | 07.311.1155.0 | 10 |
| | Color: blue | TW 2,5 - 4 BLAU | 07.311.1155.6 | 10 |
| Partition, 2 mm thick | Color: gray | | | |
| | Color: blue | | | |
| Partition, 3 mm thick | Color: gray | | | |
| | Color: blue | | | |
| 5. Cross connector with screws, E-Cu | | | | |
| insulated (jumper) | 2pole | IVB WK 2,5 - 2 | Z7.280.2227.0 | 10 |
| | 3pole | IVB WK 2,5 - 3 | Z7.280.2327.0 | 10 |
| | to 12pole | IVB WK 2,5 - 12 | Z7.280.3227.0 | 10 |
| 6. Single cover f. cross conn. with mark.facility | | AD VB 2,5 GELB | 04.326.2053.8 | 10 |
| 7. Snap-In partition | | TS 2,5 GELB | 07.311.2053.8 | 10 |
| 8. Cover strip f. cross conn. over 10 blocks with test hole | | AD VB 5/10 P GELB | 04.342.3556.8 | 10 |
| Cover strip with warning symbol over 4 blocks | | AD VB 5/4 GELB | 04.343.4756.8 | 10 |
| | | | | |
| | | | | |
| | | | | |
| For more accessories see pages 160-177 | | | | |
| For marking systems see pages 178-179 and 200-202 | | * CL I, ZN1, AExe II / **CL I, ZN1, Exe II pending | | |

[1)] EEx e terminal blocks are subject to certification. The relevant indications in the certificate apply (e.g. 660V)

[2)] Part certificates for EEx e approval: EEx e I/II L CIE 89.B0013 U; EEx e II ASEV 91.1 B11638U

UL wire connection variants

[3)] or 2x no. 14 sol/str AWG
or 2x no. 16 sol/str AWG
or 2x no. 18 sol/str AWG
or 3x no. 20 sol/str AWG or 3x no. 22 sol/str AWG

[4)] or 2x no. 12 sol/str AWG
or 2x no. 16 sol/str AWG
or 3x no. 18 sol/str AWG or 3x no. 22 sol/str AWG

[5)] or 2x no. 12 sol/str AWG
or 2x no. 14 sol/str AWG
or 3x no. 16 sol/str AWG

# selos



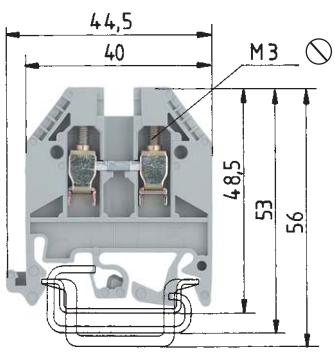


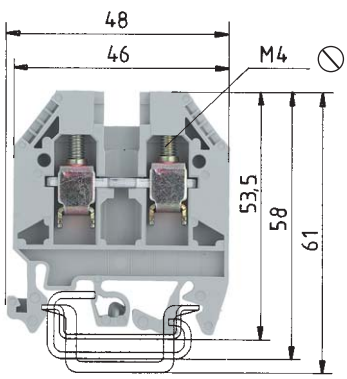


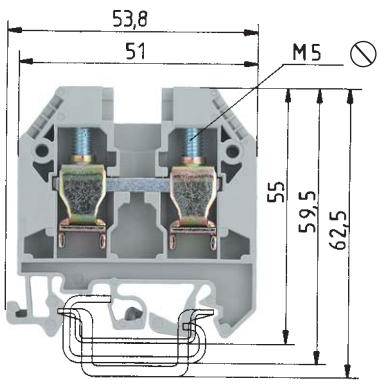


## WK 4/U

| fine stranded | solid | V | A |
|---|---|---|---|
| 0.5 – 4 mm² | 0.5 – 6 mm² | 800 V/8 kV/3 | 32 |
| No. 22-10 AWG [3] | | 600 V | 30/35 |
| No. 20-10 AWG | | 600 V | 40 |
| 6 mm | | | 9 mm |

SEV-EEX LR LCIE * ** BKI-EEx

| Type | Part no. | Std. pack |
|---|---|---|
| WK 4/U | 57.504.0055.0 | 100 |
| WK 4/U BLAU | 57.504.0055.6 | 100 |
| WK 4/U [2] | 57.504.0055.0 | 100 |
| | | |
| | | |
| 35 x 27 x 7,5 EN 60715 | 98.300.0000.0 | 1 |
| 35 x 24 x 15 EN 60715 | 98.360.0000.0 | 1 |
| 9006 EN 60715 G-32 | 98.190.0000.0 | 1 |
| WE 1/U | Z5.523.5753.0 | 100 |
| 9708/2 S35 | Z5.522.8553.0 | 100 |
| 9708 | Z5.522.7053.0 | 100 |
| AP 2,5 - 4 | 07.311.0155.0 | 10 |
| AP 2,5 - 4 BLAU | 07.311.0155.6 | 10 |
| | | |
| | | |
| TW 2,5 - 4 | 07.311.1155.0 | 10 |
| TW 2,5 - 4 BLAU | 07.311.1155.6 | 10 |
| | | |
| | | |
| | | |
| | | |
| | | |
| IVB WK 4 - 2 | Z7.281.1227.0 | 10 |
| IVB WK 4 - 3 | Z7.281.1327.0 | 10 |
| IVB WK 4 - 12 | Z7.281.2227.0 | 10 |
| AD VB 4 GELB | 04.326.2153.8 | 10 |
| TS 4 GELB | 07.311.2153.8 | 10 |
| AD VB 6/10 P GELB | 04.342.3656.8 | 10 |
| AD VB 6/4 GELB | 04.343.4856.8 | 10 |
| | | |
| | | |
| | | |
| | | |

* CL I, ZN1, AExe II / **CL I, ZN1, Exe II pending

## WK 6/U

| fine stranded | solid | V | A |
|---|---|---|---|
| 0.5 – 6 mm² | 2.5 – 10 mm² | 800 V/8 kV/3 | 41 |
| No. 22-8 AWG [4] | | 600 V | 50/50 |
| No. 20-8 AWG | | 600 V | 45 |
| 8 mm | | | 11 mm |

SEV-EEX LR LCIE * ** BKI-EEx

| Type | Part no. | Std. pack |
|---|---|---|
| WK 6/U | 57.506.0055.0 | 100 |
| WK 6/U BLAU | 57.506.0055.6 | 100 |
| WK 6/U [2] | 57.506.0055.0 | 100 |
| | | |
| | | |
| 35 x 27 x 7,5 EN 60715 | 98.300.0000.0 | 1 |
| 35 x 24 x 15 EN 60715 | 98.360.0000.0 | 1 |
| 9006 EN 60715 G-32 | 98.190.0000.0 | 1 |
| WE 1/U | Z5.523.5753.0 | 100 |
| 9708/2 S35 | Z5.522.8553.0 | 100 |
| 9708 | Z5.522.7053.0 | 100 |
| AP 6 | 07.311.0255.0 | 10 |
| AP 6 BLAU | 07.311.0255.6 | 10 |
| | | |
| | | |
| TW 6 | 07.311.1255.0 | 10 |
| TW 6 BLAU | 07.311.1255.6 | 10 |
| | | |
| | | |
| | | |
| | | |
| | | |
| IVB WK 6 - 2 | Z7.282.2227.0 | 10 |
| IVB WK 6 - 3 | Z7.282.2327.0 | 10 |
| IVB WK 6 - 12 | Z7.282.3227.0 | 10 |
| AD VB 6 GELB | 04.326.2253.8 | 10 |
| TS 6 GELB | 07.311.2253.8 | 10 |
| AD VB 8/10 P GELB | 04.342.3856.8 | 10 |
| AD VB 8/4 GELB | 04.343.4956.8 | 10 |
| | | |
| | | |
| | | |
| | | |

* CL I, ZN1, AExe II / **CL I, ZN1, Exe II pending

## WKN 10/U

| fine stranded | solid/stranded | V | A |
|---|---|---|---|
| 2.5 – 10 mm² | 1.5 – 16 mm² | 800 V/8 kV/3 | 57 |
| No. 16-6 AWG [5] | | 600 V | 65/65 |
| No. 16-6 AWG | | 600 V | 70 |
| 10 mm | | | 13 mm |

SEV-EEX LR * ** BKI-EEx

| Type | Part no. | Std. pack |
|---|---|---|
| WKN 10/U | 57.510.0155.0 | 50 |
| WKN 10/U BLAU | 57.510.0155.6 | 50 |
| WKN 10/U | 57.510.0155.0 | 50 |
| | | |
| | | |
| 35 x 27 x 7,5 EN 60715 | 98.300.0000.0 | 1 |
| 35 x 24 x 15 EN 60715 | 98.360.0000.0 | 1 |
| 9006 EN 60715 G-32 | 98.190.0000.0 | 1 |
| WE 1/U | Z5.523.5753.0 | 100 |
| 9708/2 S35 | Z5.522.8553.0 | 100 |
| 9708 | Z5.522.7053.0 | 100 |
| APN 10 | 07.311.6655.0 | 10 |
| APN 10 BLAU | 07.311.6655.6 | 10 |
| | | |
| | | |
| TWN 10 | 07.311.7655.0 | 10 |
| TWN 10 BLAU | 07.311.7655.6 | 10 |
| | | |
| | | |
| | | |
| | | |
| | | |
| IVB WKN 10 - 2 | Z7.283.2227.0 | 10 |
| IVB WKN 10 - 3 | Z7.283.2327.0 | 10 |
| IVB WKN 10 - 12 | Z7.283.3227.0 | 10 |
| AD VB 10 GELB | 04.326.2353.8 | 10 |
| TS 10 GELB | 07.311.2353.8 | 10 |
| AD VB 10/10 P GELB | 04.342.4056.8 | 10 |
| AD VB 10/4 GELB | 04.343.5056.8 | 10 |
| | | |
| | | |
| | | |
| | | |

* CL I, ZN1, AExe II / **CL I, ZN1, Exe II pending

# Feed through blocks type *WKN*

selos

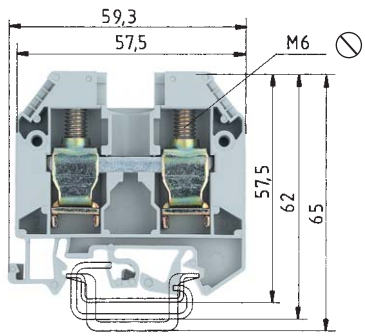


## WKN 16/U

| | | fine stranded | solid/stranded | V | A |
|---|---|---|---|---|---|
| EN 60 947-7-1/DIN VDE 0611 T1 | | 4 – 16 mm² | 1.5 – 25 mm² | 800 V/8 kV/3 | 76 |
| UL-ratings | field/factory wiring | No. 12-4 AWG | | 600 V | 85/90 |
| CSA ratings | | No. 14-4 AWG | | 600 V | 95 |
| Width | Wire strip length | 12 mm | | | 15 mm |
| Approvals | | SEV-EEX * ** BKI-EEx | | | |

### Mounting instructions for EEx e applications

– If feed-through blocks are mounted directly adjacent to feed-through blocks of a different size, or directly adjacent to ground blocks, the open side of a group of the same type of blocks has to be covered by an end plate or partition.

– If neighboring terminal blocks are jumpered by a cross connector, the required isolation distances have to be maintained by inserting either a snap-in partition plate (without increased pitch), an end plate, or a partition between the different block groups, in front of or behind the cross-connected terminal block group.

| | | Type | Part no. | Std. pack |
|---|---|---|---|---|
| **Feed through block** | Color: gray | WKN 16/U | 57.516.0155.0 | 50 |
| **Feed-through block EEx i** | Color: blue | WKN 16/U BLAU | 57.516.0155.6 | 50 |
| **Feed-through block EEx e*[1]** | Color: gray | WKN 16/U [2] | 57.516.0155.0 | 50 |
| | | | | |
| **Accessories** | | | | |
| 1. Mounting rail TS 35, DIN rail 7.5mm high | L = 2 m | 35 x 27 x 7,5 EN 60715 | 98.300.0000.0 | 1 |
| Mounting rail TS 35, DIN rail, 15mm high | L = 2 m | 35 x 24 x 15 EN 60715 | 98.360.0000.0 | 1 |
| Mounting rail TS 32, G rail | L = 2 m | 9006 EN 60715 G-32 | 98.190.0000.0 | 1 |
| 2. End clamp with U-foot | 10 mm wide | WE 1/U | Z5.523.5753.0 | 100 |
| End clamp TS 35, with screw | 8 mm wide | 9708/2 S 35 | Z5.522.8553.0 | 100 |
| End clamp TS 32, with screw | 7.5 mm wide | 9708 | Z5.522.7053.0 | 100 |
| 3. End plate, 1.5 mm thick | Color: gray | | | |
| | Color: blue | | | |
| End plate, 2 mm thick | Color: gray | APN 16 | 07.311.6755.0 | 10 |
| | Color: blue | APN 16 BLAU | 07.311.6755.6 | 10 |
| Partition, 1.5 mm thick | Color: gray | | | |
| | Color: blue | | | |
| Partition, 2 mm thick | Color: gray | TWN 16 | 07.311.7755.0 | 10 |
| | Color: blue | TWN 16 BLAU | 07.311.7755.6 | 10 |
| Partition, 3 mm thick | Color: gray | | | |
| | Color: blue | | | |
| 5. Cross connector with screws, E-Cu | | | | |
| insulated (jumper) | 2pole | IVB WKN 16 - 2 | Z7.284.2227.0 | 10 |
| | 3pole | IVB WKN 16 - 3 | Z7.284.2327.0 | 10 |
| | to 12pole | IVB WKN 16 - 12 | Z7.284.3227.0 | 10 |
| 6. Single cover f. cross conn. with mark.facility | | | | |
| 7. Partition plate with marking facility | | TSN 16 GELB | 07.311.8453.8 | 10 |
| Partition plate with cover | | TSN AD 16 GELB | 07.311.8553.8 | 10 |
| 8. Cover strip for cross conn. over 10 blocks | | | | |
| Cover strip with warn. symb. over 4 blocks | | AD VB 12/4 GELB | 04.343.5156.8 | 10 |
| | | | | |
| | | | | |
| For more accessories see pages 160-177 | | | | |
| For marking systems see pages 178-179 and 200-202 | | * CL I, ZN1, AExe II / **CL I, ZN1, Exe II pending | | |

*) with CCA certificate
1) EEx e terminal blocks are subject to certification. The relevant indications in the certificate apply (e.g. 660V)
2) Part certificates for EEx e approval: EEx e II ASEV 91.1 B11638U

# selos



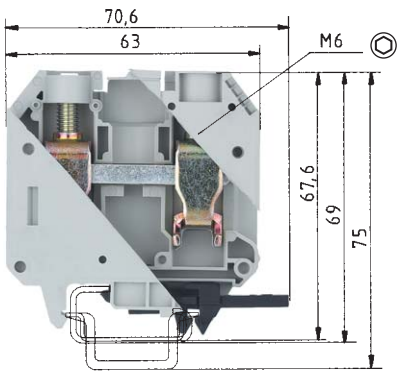


enclosed design

## WKN 35/U

| fine stranded | stranded | V | A |
|---|---|---|---|
| 10 – 35 mm² | 10 – 50 mm² | 800 V/8 kV/3 | 125 |
| No. 10-2 AWG | | 600 V | 95/95 |
| No. 10-2 AWG | | 600 V | 110 |
| 16 mm | | | 18 mm |

EPM SEV-EEX LR *
** BKI-EEx

| Type | Part no. | Std. pack |
|---|---|---|
| WKN 35/U | 57.535.0155.0 | 20 |
| WKN 35/U BLAU | 57.535.0155.6 | 20 |
| WKN 35/U [2] | 57.535.0155.0 | 20 |
| 35 x 27 x 7,5 EN 60715 | 98.300.0000.0 | 1 |
| 35 x 24 x 15 EN 60715 | 98.360.0000.0 | 1 |
| 9006 EN 60715 G-32 | 98.190.0000.0 | 1 |
| WE 2/U | Z5.523.5653.0 | 100 |
| 9708/2 S 35 | Z5.522.8553.0 | 100 |
| 9708 | Z5.522.7053.0 | 100 |
| TWN 35 | 07.311.7855.0 | 10 |
| TWN 35 BLAU | 07.311.7855.6 | 10 |
| IVB WKN 35 - 2 | Z7.285.2227.0 | 5 |
| IVB WKN 35 - 3 | Z7.285.2327.0 | 5 |
| IVB WKN 35 - 12 | Z7.285.3227.0 | 5 |
| AD VB 35 GELB | 04.326.2553.8 | 10 |
| AD VB 16/4 GELB | 04.343.5256.8 | 10 |

* CL I, ZN1, AExe II / **CL I, ZN1, Exe II pending

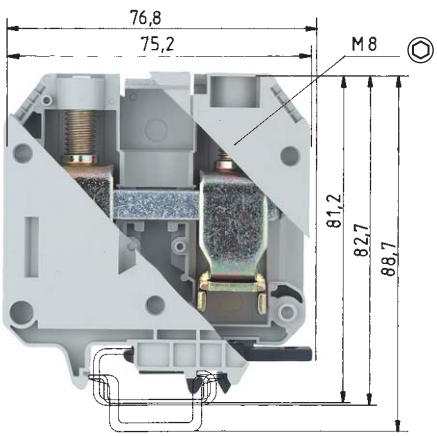


enclosed design

## WKN 70/U

| fine stranded | stranded | V | A |
|---|---|---|---|
| 10 – 70 mm² | 16 – 95 mm² | 800 V/8 kV/3 | 192 |
| No. 6-2/0 AWG | | 600 V | 175/175 |
| No. 6-2/0 AWG | | 600 V | 170 |
| 24 mm | | | 24 mm |

SEV-EEX LR [1] [2]
BKI-EEx

| Type | Part no. | Std. pack |
|---|---|---|
| WKN 70/U | 57.570.0155.0 | 20 |
| WKN 70/U BLAU | 57.570.0155.6 | 20 |
| WKN 70/U [2] | 57.570.0155.0 | 20 |
| 35 x 27 x 7,5 EN 60715 | 98.300.0000.0 | 1 |
| 35 x 24 x 15 EN 60715 | 98.360.0000.0 | 1 |
| 9006 EN 60715 G-32 | 98.190.0000.0 | 1 |
| WE 2/U | Z5.523.5653.0 | 100 |
| 9708/2 S 35 | Z5.522.8553.0 | 100 |
| 9708 | Z5.522.7053.0 | 100 |
| TWN 70 | 07.311.7955.0 | 10 |
| TWN 70 BLAU | 07.311.7955.6 | 10 |
| jumper bars unisulated see page 165 | | |
| AD VB 70 GELB | 04.326.2653.8 | 10 |
| AD VB 24/4 GELB | 04.343.5356.8 | 10 |

[1] [2] CL I, ZN1, AExe II, Exe II pending

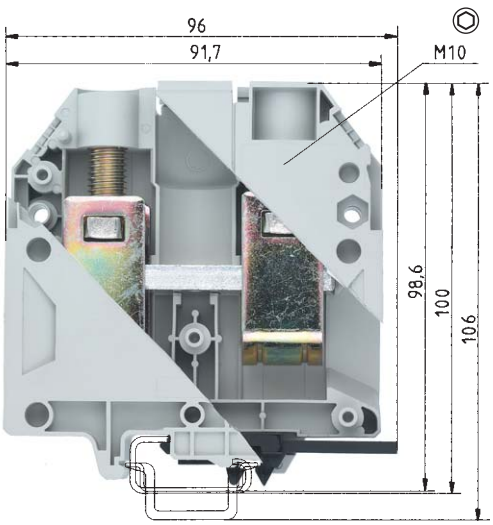


enclosed design

## WKN 150/U

| fine stranded | stranded | V | A |
|---|---|---|---|
| 35 – 150 mm² | 35 – 185 mm² | 1000 V/8 kV/3 | 309 |
| No. 2/0 AWG - 350 kcmil | | 600 V | 335/335 |
| No. 2/0 AWG - 350 MCM | | 1000 V | 365 |
| 28 mm | | | 30 mm |

SEV-EEX [1] [2] BKI-EEx

| Type | Part no. | Std. pack |
|---|---|---|
| WKN 150/U | 57.597.0155.0 | 10 |
| WKN 150/U BLAU | 57.597.0155.6 | 10 |
| WKN 150/U [2] | 57.597.0155.0 | 10 |
| 35 x 27 x 7,5 EN 60715 | 98.300.0000.0 | 1 |
| 35 x 24 x 15 EN 60715 | 98.360.0000.0 | 1 |
| 9006 EN 60715 G-32 | 98.190.0000.0 | 1 |
| WE 2/U | Z5.523.5653.0 | 100 |
| 9708/2 S 35 | Z5.522.8553.0 | 100 |
| 9708 | Z5.522.7053.0 | 100 |
| jumper bars unisulated see page 165 | | |
| AD VB 28/4 GELB | 04.343.5456.8 | 10 |

[1] [2] CL I, ZN1, AExe II, Exe II pending

# Neutral disconnect blocks for installation with U-foot, type *WKN*

selos

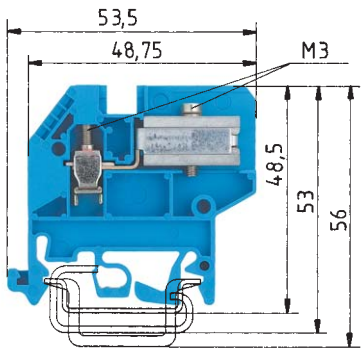


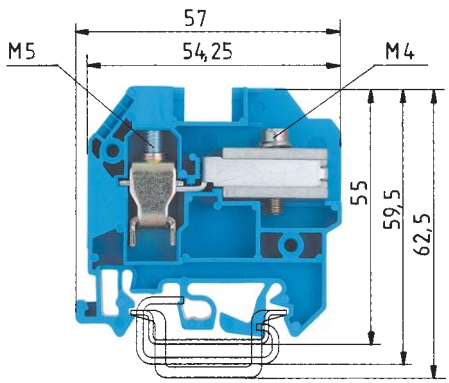


| | | | |
|---|---|---|---|
| Current carrying capability: | | | |
| fine stranded: | 4 mm² | 25 A | |
| solid: | 6 mm² | 30 A | |

| | | | |
|---|---|---|---|
| Current carrying capability: | | | |
| fine stranded: | 10 mm² | 45 A | |
| stranded: | 16 mm² | 50 A | |

## WKN 4 ETK/U

| | | | |
|---|---|---|---|
| fine stranded | solid | V | A |
| 0.5 – 4 mm² | 0.5 – 6 mm² | 400 V/6 kV/3*) | |
| CSA No. 20-10 AWG | | 600V | 25 |
| 6 mm | | | 9 mm |

## WKN 10 ETK/U

| | | | |
|---|---|---|---|
| fine stranded | solid/stranded | V | A |
| 1 – 10 mm² | 1 – 16 mm² | 400 V/6 kV/3*) | |
| CSA No.16-6 AWG | | 600V | 45 |
| 10 mm | | | 13 mm |

| | |
|---|---|
| EN 60 947-7-1/DIN VDE 0611 T1 | |
| UL-ratings/CSA ratings | field/factory wiring |
| Width | Wire strip length |
| Approvals | |

| | | Type | Part no. | Std. pack | Type | Part no. | Std. pack |
|---|---|---|---|---|---|---|---|
| **Neutral disconnect block** | Color: blue | WKN 4 ETK/U | 57.504.8155.0 | 100 | WKN 10 ETK/U | 57.510.8155.0 | 50 |
| | | | | | | | |
| | | | | | | | |
| | | | | | | | |
| **Accessories** | | | | | | | |
| 1. Mounting rail TS 35, DIN rail, 7.5 mm high | L = 2 m | 35 x 27 x 7,5 EN 60715 | 98.300.0000.0 | 1 | 35 x 27 x 7,5 EN 60715 | 98.300.0000.0 | 1 |
| Mounting rail TS 35, DIN rail 15 mm high | L = 2 m | 35 x 24 x 15 EN 60715 | 98.360.0000.0 | 1 | 35 x 24 x 15 EN 60715 | 98.360.0000.0 | 1 |
| Mounting rail TS 32, G rail | L = 2 m | 9006 EN 60715 G-32 | 98.190.0000.0 | 1 | 9006 EN 60715 G-32 | 98.190.0000.0 | 1 |
| 2. End clamp with U-foot | 10 mm wide | WE 1/U | Z5.523.5753.0 | 100 | WE 1/U | Z5.523.5753.0 | 100 |
| End clamp TS 35, with screw | 8 mm wide | 9708/2 S35 | Z5.522.8553.0 | 100 | 9708/2 S35 | Z5.522.8553.0 | 100 |
| End clamp TS 32, with screw | 7.5 mm wide | 9708 | Z5.522.7053.0 | 100 | 9708 | Z5.522.7053.0 | 100 |
| 3. End plate 1,5 mm thick | Color: gray | | | | | | |
| | Color: blue | APN 4 ETK | 07.312.1155.0 | 10 | APN 10 ETK | 07.312.0955.0 | 10 |
| End plate 2 mm thick | Color: gray | | | | | | |
| | Color: blue | | | | | | |
| 4. Partition, 1.5 mm thick | Color: gray | | | | | | |
| | Color: blue | | | | | | |
| Partition, 2 mm thick | Color: gray | | | | | | |
| | Color: blue | | | | | | |
| Partition, 3 mm thick | Color: gray | | | | | | |
| | Color: blue | | | | | | |
| 5. Busbar support 10 x 3 | 4 mm wide | WKI SH/U | 01.108.3255.0 | 10 | WKI SH/U | 01.108.3255.0 | 10 |
| 6. Busbar E-Cu, 10 x 3 | L = 1 m | 9813 M | 98.290.0000.0 | 1 | 9813 M | 98.290.0000.0 | 1 |
| Busbar, tin-plated, 10 x 3 | L = 1 m | 9813 M SN | 98.290.1000.0 | 1 | 9813 M SN | 98.290.1000.0 | 1 |
| 7. Connector clamps for busbar | Farbe: blue | | | | | | |
| Connector clamps for busbar | Color: unplated | | | | | | |
| 8. Single cover f. cross conn. with marking facility | | AD VB 4 GELB | 04.326.2153.8 | 10 | AD VB 10 GELB | 04.326.2353.8 | 10 |
| 9. Partition plate with marking facility | | | | | | | |
| 10. Cover strip for cross conn. over 10 blocks | | | | | | | |
| Cover strip with warn. symb. over 4 blocks | | | | | | | |
| | | | | | | | |
| For more accessories see pages 160-177 | | | | | | | |
| For marking systems see pages 178-179 and 200-202 | | | | | | | |
| *) For use in grounded networks 690/400 V | | | | | | | |

# Connector clamps for Cu busbar (10 x 3 mm), type *WAK*

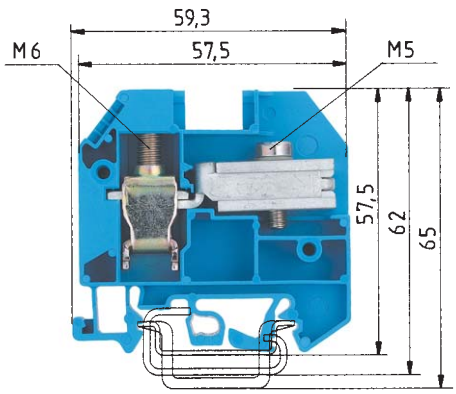

Current carrying capability:

| | | |
|---|---|---|
| fine stranded: | 16 mm² | 62 A |
| stranded: | 25 mm² | 67 A |

## WKN 16 ETK/U

| fine stranded | solid/stranded | V | A |
|---|---|---|---|
| 1 – 16 mm² | 1 – 25 mm² | 400 V/6 kV/3*) | |
| CSA No. 14-4 AWG | | 600V | 65 |
| 12 mm | | | 15 mm |

## WAK 16/2

EN 60 998-2-1 CCA/CH

| fine stranded | stranded | V | A |
|---|---|---|---|
| 1,5 – 16 mm² | 10 – 16 mm² | | 76 |
| 8,4 mm | | | 16 mm |

## WAK 35/2

EN 60 998-2-1 CCA/CH

| fine stranded | stranded | V | A |
|---|---|---|---|
| 16 – 35 mm² | 16 – 35 mm² | | 125 |
| 17 mm | | | 14 mm |

| Type | Part no. | Std. pack | Type | Part no. | Std. pack | Type | Part no. | Std. pack |
|---|---|---|---|---|---|---|---|---|
| WKN 16 ETK/U | 57.516.8155.0 | 50 | | | | | | |
| 35 x 27 x 7,5 EN 60715 | 98.300.0000.0 | 1 | | | | | | |
| 35 x 24 x 15 EN 60715 | 98.360.0000.0 | 1 | | | | | | |
| 9006 EN 60715 G-32 | 98.190.0000.0 | 1 | | | | | | |
| WE 1/U | Z5.523.5753.0 | 100 | | | | | | |
| 9708/2 S35 | Z5.522.8553.0 | 100 | | | | | | |
| 9708 | Z5.522.7053.0 | 100 | | | | | | |
| APN 16 ETK | 07.312.0855.0 | 10 | | | | | | |
| WKI SH/U | 01.108.3255.0 | 10 | | | | | | |
| 9813 M | 98.290.0000.0 | 1 | | | | | | |
| 9813 M SN | 98.290.1000.0 | 1 | | | | | | |
| | | | WAK 16/2 BLAU | 30.494.3021.6 | 100 | WAK 35/2 BLAU | 30.494.4021.6 | |
| | | | | | | WAK 35/2 | 30.494.4121.0 | 50 |
| AD VB 16 GELB | 04.326.2453.8 | 10 | | | | | | |

# Ground blocks
## type *WK/WKN ... SL/U*

**selos**

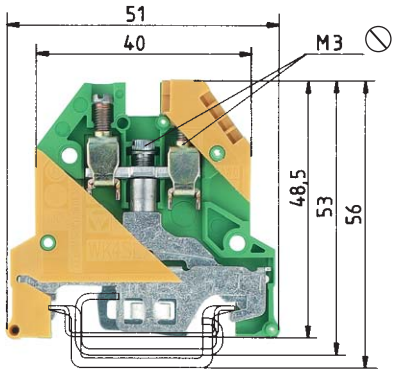


enclosed design

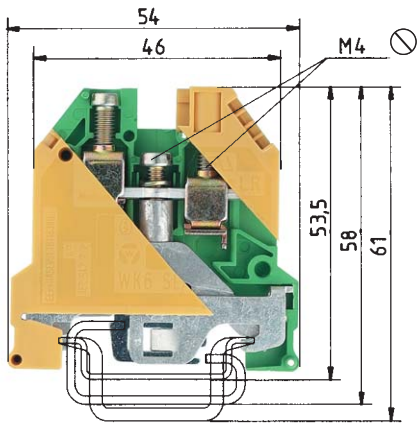


enclosed design

| | WK 4 SL/U | WK 6 SL/U |
|---|---|---|
| EN 60 947-7-2/DIN VDE 0611 T3 | fine stranded solid V A | fine stranded solid V A |
| | 0.5 – 4 mm² 0.5 – 6 mm² 800 V/8 kV/3*) **) | 0.5 – 6 mm² 0.5 – 10 mm² 800 V/8 kV/3*) **) |
| UL-ratings field/factory wiring | No. 22-10 AWG | No. 22-8 AWG |
| CSA ratings | No. 20-10 AWG | No. 20-8 AWG |
| Width Wire strip length | 6 mm 9 mm | 8 mm 12 mm |
| Approvals | EPM SEV-EEX LR * ** BKI-EEx | EPM SEV-EEX LR * ** BKI-EEx |

| | Type | Part no. | Std. pack | Type | Part no. | Std. pack |
|---|---|---|---|---|---|---|
| **Ground block with U-foot** Color: yellow/green | WK 4 SL/U | 57.504.9055.0 | 100 | WK 6 SL/U | 57.506.9055.0 | 100 |
| **EEx e ground block with U-foot**[1] | WK 4 SL/U[2] | 57.504.9055.0 | 100 | WK 6 SL/U[2] | 57.506.9055.0 | 100 |
| | | | | | | |
| **Accessories** | | | | | | |
| 1. Mounting rail TS 35, DIN rail, 7.5 mm high L = 2 m | 35 x 27 x 7,5 EN 60715 | 98.300.0000.0 | 1 | 35 x 27 x 7,5 EN 60715 | 98.300.0000.0 | 1 |
| Mounting rail TS 35, DIN rail, 15mm high L = 2 m | 35 x 24 x 15 EN 60715 | 98.360.0000.0 | 1 | 35 x 24 x 15 EN 60715 | 98.360.0000.0 | 1 |
| Mounting rail TS 32, G rail L = 2 m | 9006 EN 60715 G-32 | 98.190.0000.0 | 1 | 9006 EN 60715 G-32 | 98.190.0000.0 | 1 |
| 2. End clamp with U-foot 10 mm wide | | | | | | |
| End clamp TS 35, with screw 8 mm wide | | | | | | |
| End clamp TS 32, with screw 7.5 mm wide | | | | | | |
| 3. End plate, 1.5 mm thick Color: gray | | | | | | |
| Color: blue | | | | | | |
| End plate, 2 mm thick Color: gray | | | | | | |
| Color: blue | | | | | | |
| 4. Partition, 1.5 mm thick Color: gray | | | | | | |
| Color: blue | | | | | | |
| Partition, 2 mm thick Color: gray | | | | | | |
| Color: blue | | | | | | |
| Partition, 3 mm thick Color: gray | | | | | | |
| Color: blue | | | | | | |
| 5. Cross connector with screws, E-Cu | | | | | | |
| insulated (jumper) 2pole | | | | | | |
| 3pole | | | | | | |
| to 12pole | | | | | | |
| 6. Single cover f. cross conn. with marking facility | | | | | | |
| 7. Snap-in partition plate with marking facility | | | | | | |
| 8. Cover strip for cross conn. over 10 blocks | | | | | | |
| Cover strip with warn. symb. over 4 blocks | | | | | | |
| For more accessories see pages 160-177 | | | | | | |
| For marking systems see pages 178-179 and 200-202 | * CL I, ZN1, AExe II / **CL I, ZN1, Exe II pending | | | | | |
| | | | | * CL I, ZN1, AExe II / **CL I, ZN1, Exe II pending | | |

*) Ratings to adjacent feed-through blocks of the same series and size
**) For the current carrying capability of the mounting rail see section ***facts*** & DATA
1) EEx e terminal blocks are subject to certification. The relevant indications in the certificate apply (e.g. 660V)
2) Part certificates for EEx e approval: EEx e II ASEV 91.1 B11638U

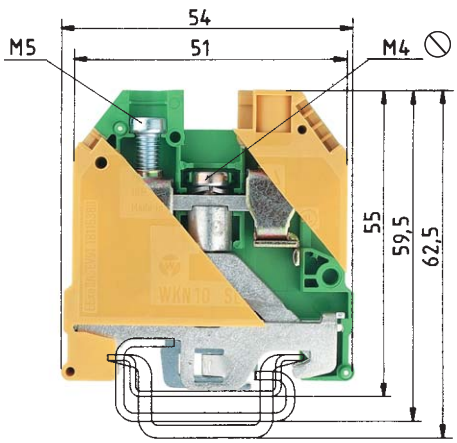


enclosed design

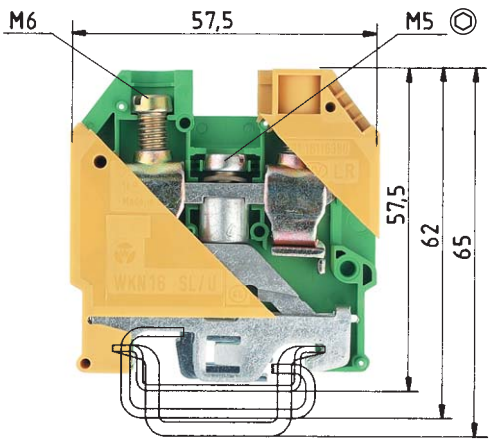


enclosed design

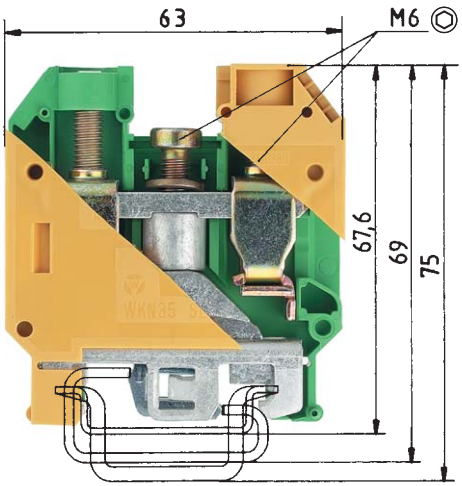


enclosed design

## WKN 10 SL/U

| fine stranded | solid/stranded | V | A |
|---|---|---|---|
| 2.5 – 10 mm² | 1.5 – 16 mm² | 800 V/8 kV/3*) | **) |
| No. 16-6 AWG | | | |
| No. 16-6 AWG | | | |
| 10 mm | | | 13 mm |

GL EPM SEV-EEX SEV N NV FI KEMA S LR UL * CSA **
BKI-EEx

| Type | Part no. | Std. pack |
|---|---|---|
| WKN 10 SL/U | 57.510.9055.0 | 50 |
| WKN 10 SL/U[2)] | 57.510.9055.0 | 50 |
| | | |
| | | |
| 35 x 27 x 7,5 EN 60715 | 98.300.0000.0 | 1 |
| 35 x 24 x 15 EN 60715 | 98.360.0000.0 | 1 |
| 9006 EN 60715 G-32 | 98.190.0000.0 | 1 |

* CL I, ZN1, AExe II / **CL I, ZN1, Exe II pending

## WKN 16 SL/U

| fine stranded | solid/stranded | V | A |
|---|---|---|---|
| 4 – 16 mm² | 1.5 – 25 mm² | 800 V/8 kV/3*) | **) |
| No. 12-4 AWG | | | |
| No. 14-4 AWG | | | |
| 12 mm | | | 15 mm |

GL EPM SEV-EEX SEV N NV FI KEMA S LR UL * CSA **
BKI-EEx

| Type | Part no. | Std. pack |
|---|---|---|
| WKN 16 SL/U | 57.516.9055.0 | 50 |
| WKN 16 SL/U[2)] | 57.516.9055.0 | 50 |
| | | |
| | | |
| 35 x 27 x 7,5 EN 60715 | 98.300.0000.0 | 1 |
| 35 x 24 x 15 EN 60715 | 98.360.0000.0 | 1 |
| 9006 EN 60715 G-32 | 98.190.0000.0 | 1 |

* CL I, ZN1, AExe II / **CL I, ZN1, Exe II pending

## WKN 35 SL/U

| fine stranded | stranded | V | A |
|---|---|---|---|
| 10 – 35 mm² | 10 – 50 mm² | 800 V/8 kV/3*) | **) |
| No. 10-2 AWG | | | |
| No. 10-2 AWG | | | |
| 16 mm | | | 20 mm |

GL EPM SEV-EEX SEV N NV FI KEMA S LR UL * CSA **
BKI-EEx

| Type | Part no. | Std. pack |
|---|---|---|
| WKN 35 SL/U | 57.535.9055.0 | 20 |
| WKN 35 SL/U[2)] | 57.535.9055.0 | 20 |
| | | |
| | | |
| 35 x 27 x 7,5 EN 60715 | 98.300.0000.0 | 1 |
| 35 x 24 x 15 EN 60715 | 98.360.0000.0 | 1 |
| 9006 EN 60715 G-32 | 98.190.0000.0 | 1 |

* CL I, ZN1, AExe II / **CL I, ZN1, Exe II pending

# Ground blocks
# with screw connection, type *WKN*

selos

For ground blocks of 70 mm² or more only mounting rails from E-copper must be used because of the current carrying capability.

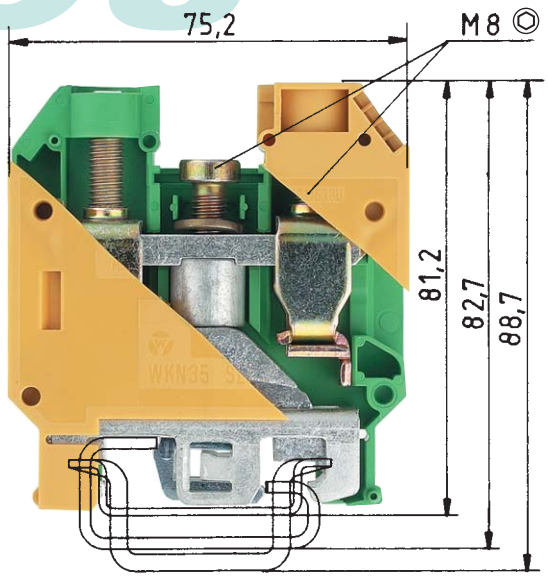


enclosed design available from October 2001

## WKN 70 SL/U

| | fine stranded | stranded | V | A |
|---|---|---|---|---|
| DIN VDE 0611 Teil 3/11.89, DIN VDE 0110/01.89 | 10 – 70 mm² | 16 – 95 mm² | 800 V/8 kV/3 | **) |
| UL-ratings field/factory wiring | | | | |
| CSA ratings | CSA No. 6-2/0 AWG | | Pending | |
| Width Wire strip length | 24 mm | | | |
| Approvals | SEV UL * CSA * | | | |

| | Type | Part no. | Std. pack |
|---|---|---|---|
| **Ground block with U-foot** Color: yellow/green | WKN 70 SL/U | 57.570.9055.0 | |
| **Ground block** for TS 35 EN60715 Color: yellow/green | | | |
| | | | |
| | | | |
| **Accessories** | | | |
| 1. Mounting rail TS 35, DIN rail, 7.5 mm high L = 2 m | | | |
| Mounting rail TS 35, DIN rail, 15mm high L = 2 m | 35 x 24 x 15 EN 60715 CU | 98.380.0000.0 | 10 |
| Mounting rail TS 32, G rail L = 2 m | 9006 EN 60715 G-32 E-CU | 98.220.0000.0 | 10 |
| 2. End clamp with U-foot 10 mm wide | | | |
| End clamp TS 35, with screw 8 mm wide | | | |
| End clamp TS 32, with screw 7.5 mm wide | | | |
| 3. End plate, 1.5 mm thick Color: gray | | | |
| Color: blue | | | |
| End plate, 2 mm thick Color: gray | | | |
| Color: blue | | | |
| 4. Partition, 1.5 mm thick Color: gray | | | |
| Color: blue | | | |
| Partition, 2 mm thick Color: gray | | | |
| Color: blue | | | |
| Partition, 3 mm thick Color: gray | | | |
| Color: blue | | | |
| 5. Cross connector (jumper) with screws, E-Cu | | | |
| insulated 2pole | | | |
| 3pole | | | |
| to 12pole | | | |
| 6. Single cover f. cross conn. with marking facility | | | |
| 7. Partition plate with marking facility | | | |
| 8. Cover strip for cross conn. over 10 blocks | | | |
| Cover strip with warn. symb. over 4 blocks | | | |
| | | | |
| | | | |
| For more accessories see pages160-177 | | | |
| For marking systems see pages 178-179 and 200-202 | * CL I, ZN1, AExe II / Exe II pending | | |
| **) For the current carrying capability of the mounting rail see section ***facts*** & DATA | | | |

# Ground blocks for TS 35

selos



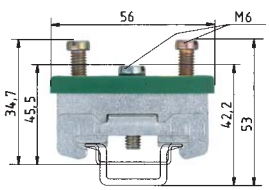


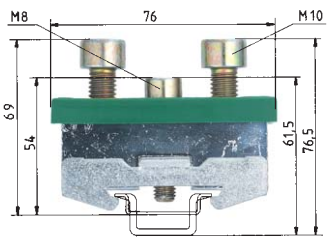


Clamping screw stop-plate, Polyamide 66/6
Clamping body, nickel-plated brass
Screws: nickel-plated brass
Clamping foot: nickel-plated brass
Clamping spring: zinc-plated steel

## 9700 A/35 E S 35

fine stranded 35 mm² | stranded 50 mm² | V | A **)

## 9700 A/70 E S 35

fine stranded 70 mm² | stranded 120 mm² | V | A **)
No. 6-2/0 AWG
No. 6-2/0 AWG

| Type | Part no. | Std. pack | Type | Part no. | Std. pack |
|---|---|---|---|---|---|
| 9700 A/35 E S 35 | Z2.302.0621.0 | 25 | 9700 A/70 E S 35 | Z2.302.0421.0 | 10 |
| 35 x 27 x 7,5 EN 60715 | 98.300.0000.0 | 1 | | | |
| 35 x 24 x 15 EN 60715 | 98.360.0000.0 | 1 | 35 x 24 x 15 EN 60715 CU | 98.380.0000.0 | 10 |

# Duo feed through blocks, type *WK 4/D...*

selos

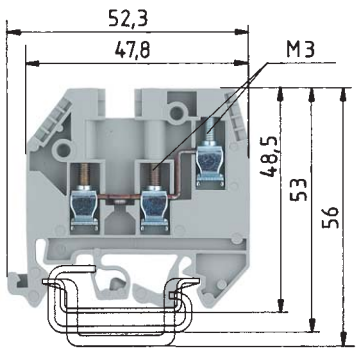


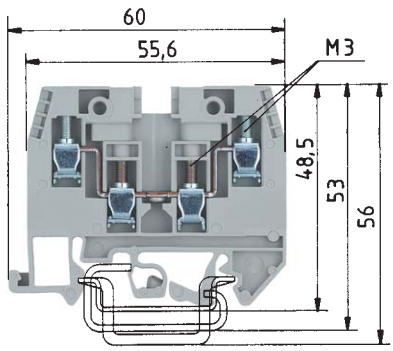


| | | WK 4/D 1/2 /U | | | WK 4/D 2/2 /U | | |
|---|---|---|---|---|---|---|---|
| EN 60 947-7-1/DIN VDE 0611 T1 | | fine stranded | solid | V | fine stranded | solid | V |
| EN 60 947-7-2/DIN VDE 0611 T3 | | 0.5 – 4 mm² | 0.5 – 6 mm² | 500 V/6 kV/3 | 0.5 – 4 mm² | 0.5 – 6 mm² | 500 V/6 kV/3 |
| UL-ratings | field/factory wiring | No. 22-10 AWG | | 600 V | No. 22-10 AWG | | 600 V |
| CSA ratings | | No. 20-10 AWG | | 600 V | No. 20-10 AWG | | 600 V |
| Width | Wire strip length | 6 mm | | 9 mm | 6 mm | | 9 mm |
| Approvals | | GL SEV N NV FI S LR UL * CSA ** VDE B | | | GL SEV N NV FI S LR UL * CSA ** VDE B | | |

| | | Type | Part no. | Std. pack | Type | Part no. | Std. pack |
|---|---|---|---|---|---|---|---|
| **Duo feed-through block 1/2** | Color: gray | WK 4/D 1/2 /U | 57.504.5055.0 | 100 | | | |
| | Color: blue | WK 4/D 1/2 /U BLAU | 57.504.5055.6 | 100 | | | |
| **Duo feed-through block 2/2** | Color: gray | | | | WK 4/D 2/2 /U | 57.504.5155.0 | 100 |
| | Color: blue | | | | WK 4/D 2/2 /U BLAU | 57.504.5155.6 | 100 |
| **Duo multi-tier block** | Color: gray | | | | | | |
| **Duo ground block 2/2** | Color: green/yellow | | | | | | |
| | | | | | | | |
| **Accessories** | | | | | | | |
| 1. Mounting rail TS 35, DIN rail, 7.5 mm high | L = 2 m | 35 x 27 x 7,5 EN 60715 | 98.300.0000.0 | 1 | 35 x 27 x 7,5 EN 60715 | 98.300.0000.0 | 1 |
| Mounting rail TS 35, DIN rail 15 mm high | L = 2 m | 35 x 24 x 15 EN 60715 | 98.360.0000.0 | 1 | 35 x 24 x 15 EN 60715 | 98.360.0000.0 | 1 |
| Mounting rail TS 32, G rail | L = 2 m | 9006 EN 60715 G-32 | 98.190.0000.0 | 1 | 9006 EN 60715 G-32 | 98.190.0000.0 | 1 |
| 2. End clamp with U-foot | 10 mm wide | WE 1/U | Z5.523.5753.0 | 100 | WE 1/U | Z5.523.5753.0 | 100 |
| End clamp TS 35, with screw | 8 mm wide | 9708/2 S 35 | Z5.522.8553.0 | 100 | 9708/2 S 35 | Z5.522.8553.0 | 100 |
| End clamp TS 32 with screw | 7.5 mm wide | 9708 | Z5.522.7053.0 | 100 | 9708 | Z5.522.7053.0 | 100 |
| 3. End plate, 1.5 mm thick | Color: gray | AP 4/D 1/2 | 07.311.6455.0 | 10 | AP 4/D.. | 07.311.6355.0 | 10 |
| | Color: blue | AP 4/D 1/2 BLAU | 07.311.6455.6 | | AP 4/D.. BLAU | 07.311.6355.6 | 10 |
| 4. Partition, 1.5 mm thick | Color: gray | | | | | | |
| 5. Cross connector with screws, E-Cu | | | | | | | |
| insulated (jumper) | 2pole | IVB WK 4 D...-2 | Z7.281.7227.0 | 10 | IVB WK 4 D...-2 | Z7.281.7227.0 | 10 |
| | 3pole | IVB WK 4 D...-3 | Z7.281.7327.0 | 10 | IVB WK 4 D...-3 | Z7.281.7327.0 | 10 |
| | to 12pole | IVB WK 4 D...-12 | Z7.281.8227.0 | 10 | IVB WK 4 D...-12 | Z7.281.8227.0 | 10 |
| 6. Jumper comb for lower tier blocks | | | | | | | |
| insulated | 2pole | IVK WK 4/D...-2 | Z7.256.2227.0 | 10 | IVK WK 4/D...-2 | Z7.256.2227.0 | 10 |
| | to 6pole | IVK WK 4/D...-6 | Z7.256.2627.0 | 10 | IVK WK4/D...-6 | Z7.256.2627.0 | 10 |
| Jumper comb, straight, 1mm thick | 2pole | | | | | | |
| | to 6pole | | | | | | |
| 7. Single cover f. cross conn. with marking facility | | AD VB 4 GELB | 04.326.2153.8 | 10 | AD VB 4 GELB | 04.326.2153.8 | 10 |
| 8. Partition plate with marking facility | | TS 4/15 GELB | 07.311.2953.8 | 10 | TS 4/15 GELB | 07.311.2953.8 | 10 |
| 9. Cover strip for cross conn. over 10 blocks | | AD VB 6/10 GELB | 04.342.0656.8 | 10 | AD VB 6/10 GELB | 04.342.0656.8 | 10 |
| Cover strip with warn. symb. over 4 blocks | | | | | | | |
| 10. Cover with warning symbol | | | | | | | |
| | | | | | | | |
| For more accessories see pages 160-177 | | | | | | | |
| For marking systems see pages 178-179 and 200-202 | | * CL I, ZN1, AExe II / **CL I, ZN1, Exe II pending | | | * CL I, ZN1, AExe II / **CL I, ZN1, Exe II pending | | |

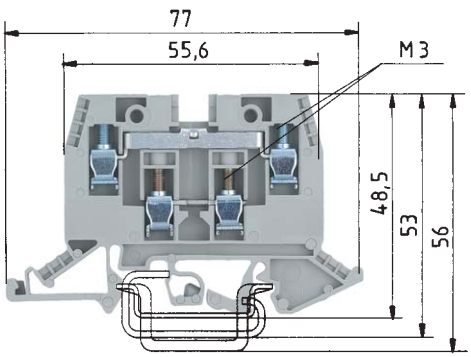


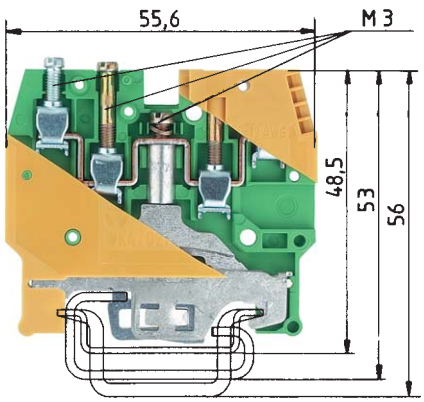


*) 500 V/6 kV/3 with partition plate 07.311.2953.8 between two adjacent blocks
**) with partition plate 07.311.2953.8 between two adjacent blocks

enclosed design
*) For the ratings to adjacent feed-through blocks of the same series and size and the current carrying capability of the mounting rail see section ***facts*** & DATA

## WK 4/D EU

| | | V | A |
|---|---|---|---|
| 0.5 – 4 mm² | 0.5 – 6 mm² | 320 V/4 kV/3*) | 26 |
| No. 22-10 AWG | | 300 V**) | 30 |
| No. 20-10 AWG | | 600 V**) | 30 |
| 6 mm | | | 9 mm |

## WK 4/D 2/2 SL U

| fine stranded | solid | V | A |
|---|---|---|---|
| 0.5 – 4 mm² | 0.5 – 6 mm² | 500 V/6 kV/3*) | |
| No. 22-10 AWG | | | |
| No. 20-10 AWG | | | |
| 6 mm | | | 9 mm |

| Type | Part no. | Std. pack |
|---|---|---|
| WK 4/D EU | 57.504.5255.0 | 100 |
| 35 x 27 x 7,5 EN 60715 | 98.300.0000.0 | 1 |
| 35 x 24 x 15 EN 60715 | 98.360.0000.0 | 1 |
| 9006 EN 60715 G-32 | 98.190.0000.0 | 1 |
| WE 1/U | Z5.523.5753.0 | 100 |
| 9708/2 S 35 | Z5.522.8553.0 | 100 |
| 9708 | Z5.522.7053.0 | 100 |
| AP 4/D... | 07.311.6355.0 | 10 |
| AP 4/D.. BLAU | 07.311.6355.6 | 10 |
| IVB WK 4/DEU-2 | Z7.271.0227.0 | 10 |
| IVB WK 4 /DEU-3 | Z7.271.0327.0 | 10 |
| IVB WK 4/DEU-12 | Z7.271.1227.0 | 10 |
| IVK WK 4/D...-2 | Z7.256.2227.0 | 10 |
| IVK WK 4/D...-6 | Z7.256.2627.0 | 10 |
| AD VB 4 GELB | 04.326.2153.8 | 10 |
| TS 4/15 GELB | 07.311.2953.8 | 10 |
| AD VB 6/10 GELB | 04.342.0656.8 | 10 |

* CL I, ZN1, AExe II / **CL I, ZN1, Exe II

| Type | Part no. | Std. pack |
|---|---|---|
| WK 4/D 2/2 SL U | 57.504.9155.0 | 100 |
| 35 x 27 x 7,5 EN 60715 | 98.300.0000.0 | 1 |
| 35 x 24 x 15 EN 60715 | 98.360.0000.0 | 1 |
| 9006 EN 60715 G-32 | 98.190.0000.0 | 1 |

* CL I, ZN1, AExe II / **CL I, ZN1, Exe II

# Multi-tier blocks
## type *WK 4 E...*

selos

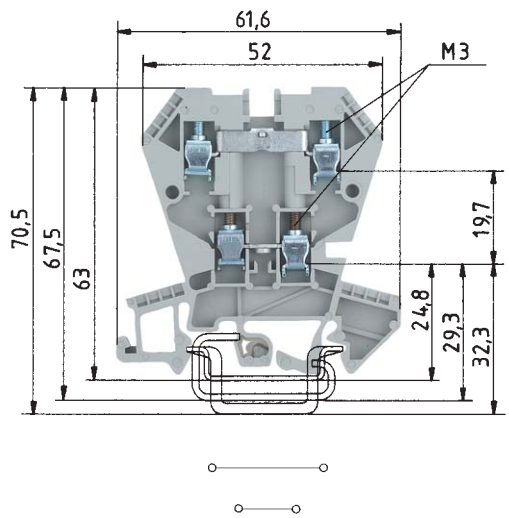


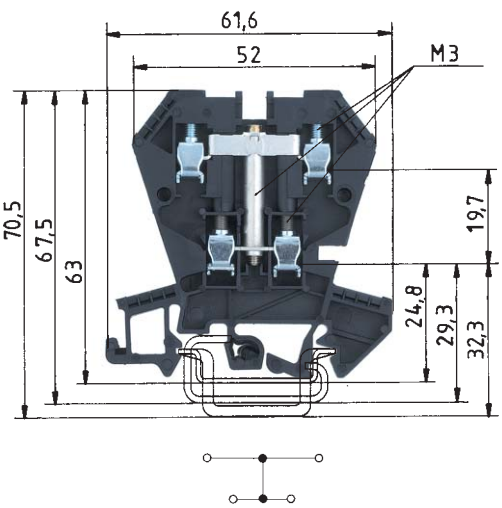


| | | WK 4 E/U | | | | WK 4 E/U /VB | | | |
|---|---|---|---|---|---|---|---|---|---|
| EN 60 947-7-1/DIN VDE 0611 T1 | | fine stranded | solid | V | A | fine stranded | solid | V | A |
| EN 60 947-7-2/DIN VDE 0611 T3 | | 0.5 – 4 mm² | 0.5 – 4 mm² | 400 V/6 kV/3[1] | 32 | 0.5 – 4 mm² | 0.5 – 4 mm² | 400 V/6 kV/3 | 32 |
| UL-ratings | field/factory wiring | No. 22-10 AWG | | 300 V | 20 | No. 22-10 AWG | | 300 V | 20 |
| CSA ratings | | No. 20-12 AWG | | 300 V | 10 | No. 20-12 AWG | | 300 V | 10 |
| Width | Wire strip length | 6 mm | | | 9 mm | 6 mm | | | 9 mm |
| Approvals | | GL, Ex, N, NV, FI, CCC, S, LR, UL, * CSA, ** | | | | GL, Ex, N, NV, FI, CCC, S, LR, UL, CSA | | | |

| | | Type | Part no. | Std. pack | Type | Part no. | Std. pack |
|---|---|---|---|---|---|---|---|
| **Multi-tier block** | Color: gray | WK 4 E/U | 57.404.7055.0 | 100 | | | |
| **Multi-tier block** | Color: black | | | | WK 4 E/U/VB SCHWARZ | 57.404.6955.1 | 100 |
| **Multi-tier block with inverted diode** | Color: orange | | | | | | |
| **Multi-tier block** | Color: red | | | | | | |
| **Ground block** | Color: green/yellow | | | | | | |
| | | | | | | | |
| | | | | | | | |
| **Accessories** | | | | | | | |
| 1. Mounting rail TS 35, DIN rail, 7.5 mm high | L = 2 m | 35 x 27 x 7,5 EN 60715 | 98.300.0000.0 | 1 | 35 x 27 x 7,5 EN 60715 | 98.300.0000.0 | 1 |
| Mounting rail TS 35, DIN rail 15 mm high | L = 2 m | 35 x 24 x 15 EN 60715 | 98.360.0000.0 | 1 | 35 x 24 x 15 EN 60715 | 98.360.0000.0 | 1 |
| Mounting rail TS 32, G rail | L = 2 m | 9006 EN 60715 G-32 | 98.190.0000.0 | 1 | 9006 EN 60715 G-32 | 98.190.0000.0 | 1 |
| 2. End clamp with U-foot | 10 mm wide | WE 1/U | Z5.523.5753.0 | 100 | WE 1/U | Z5.523.5753.0 | 100 |
| End clamp TS 35, with screw | 8 mm wide | 9708/2 S 35 | Z5.522.8553.0 | 100 | 9708/2 S 35 | Z5.522.8553.0 | 100 |
| End clamp TS 32 with screw | 7.5 mm wide | 9708 | Z5.522.7053.0 | 100 | 9708 | Z5.522.7053.0 | 100 |
| 3. End plate, 1.5 mm thick | Color: gray | AP 4 E | 07.311.4055.0 | 10 | AP 4 E | 07.311.4055.0 | 10 |
| Partition, 1.5 mm thick | Color: gray | TW 4 E | 07.311.5055.0 | 10 | TW 4 E | 07.311.5055.0 | 10 |
| 5. Cross connector with screws, E-Cu | | | | | | | |
| uninsulated for top tier | 2pole | 9215-2 | Z7.210.3227.0 | 50 | | Z7.210.3227.0 | 50 |
| | 3pole | 9215-3 | Z7.210.3327.0 | 50 | | Z7.210.3327.0 | 50 |
| | to 6pole | 9215-6 | Z7.210.3627.0 | 50 | | Z7.210.3627.0 | 50 |
| 6. Jumper comb for lower tier block | | | | | | | |
| angled, 1 mm thick insulation | 2pole | IVBS WK 4 E-2 | Z7.256.4227.0 | 10 | IVBS WK 4 E-2 | Z7.256.4227.0 | 10 |
| | to 6pole | IVBS WK 4 E-6 | Z7.256.4627.0 | 10 | IVBS WK 4 E-6 | Z7.256.4627.0 | 10 |
| Jumper comb for lower tier block | | | | | | | |
| straight, 1mm thick insulated | 2pole | | IVB WK 4 E-2Z7.255.2227.0 | 10 | IVB WK 4 E-2 | Z7.255.2227.0 | 10 |
| | to 6pole | | | | IVB WK 4 E-6 | Z7.255.2627.0 | 10 |
| 7. Single cover f. cross conn. with marking facility | | IVB WK 4 E-6 | Z7.255.2627.0 | 10 | | | |
| 8. Snap-in partition plate with marking facility | | AD VB 4/15 GELB | 04.326.2953.8 | 10 | | | |
| 9. Cover strip for cross conn. over 10 blocks | | | | | AD VB 6/10 E GELB | 04.342.2656.8 | 10 |
| Cover strip with warning symbol over 4 blocks | | AD VB 6/10 E GELB | 04.342.2656.8 | 10 | | | |
| | | | | | | | |
| For more accessories see pages 160-177 | | | | | | | |
| For marking systems see pages 178-179 and 200-202 | | | | | | | |
| [1] With end plates 500 V/6 kV/3 | | * CL I, ZN1, AExe II / **CL I, ZN1, Exe II pending | | | | | |

# Ground block
# Type *WK 4 E SL/U*



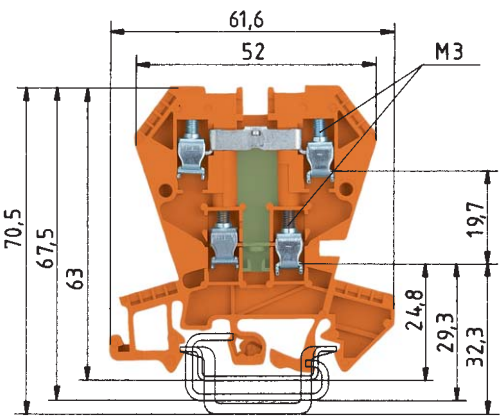


Diode versions: 300 V max.

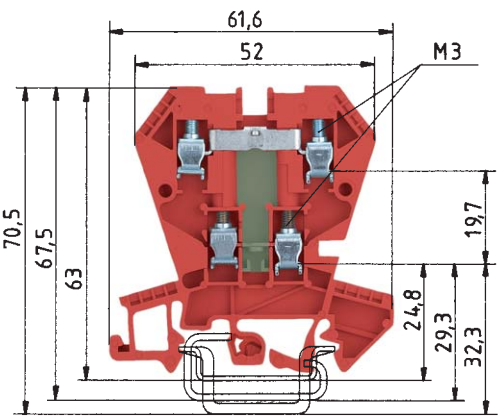


LED version 24 V DC max.

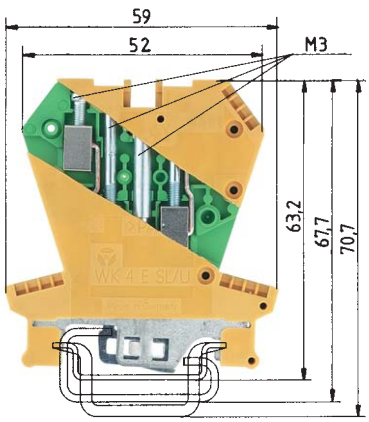


enclosed design

*) Rating to the adjacent feed-through block of the same series and size. For the current carrying capability of the mounting rail see section ***facts*** & DATA

## WK 4 E/U...

| fine stranded | solid | V | A |
|---|---|---|---|
| 0.5 – 4 mm² | 0.5 – 4 mm² | | |
| No. 22-10 AWG | | | |
| No. 20-12 AWG | | | |
| 6 mm | | | 9 mm |

| Type | Part no. | Std. pack |
|---|---|---|
| WK 4 E/U... | 57.404.XX55.9 | |
| WK 4 E/U... | 57.404.XX55.5 | |
| 35 x 27 x 7,5 EN 60715 | 98.300.0000.0 | 1 |
| 35 x 24 x 15 EN 60715 | 98.360.0000.0 | 1 |
| 9006 EN 60715 G-32 | 98.190.0000.0 | 1 |
| WE 1/U | Z5.523.5753.0 | 100 |
| 9708/2 S 35 | Z5.522.8553.0 | 100 |
| 9708 | Z5.522.7053.0 | 100 |
| AP 4 E | 07.311.4055.0 | 10 |
| TW 4 E | 07.311.5055.0 | 10 |
| IVBS WK 4 E-2 | Z7.256.4227.0 | 10 |
| IVBS WK 4 E-6 | Z7.256.4627.0 | 10 |
| IVB WK 4 E-2 | Z7.255.2227.0 | 10 |
| IVB WK 4 E-6 | Z7.255.2627.0 | 10 |

## WK 4 E/U...

| fine stranded | solid | V | A |
|---|---|---|---|
| 0.5 – 4 mm² | 0.5 – 4 mm² | | |
| No. 22-10 AWG | | | |
| No. 20-12 AWG | | | |
| 6 mm | | | 9 mm |

| Type | Part no. | Std. pack |
|---|---|---|
| 57.404.8355.5<br>57.404.8055.9<br>with inverted diode | 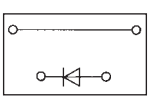 1 A/1000 V | |
| 57.404.8255.5<br>57.404.8155.9<br>with inverted diode | 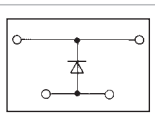 1 A/1000 V | |
| 57.404.7255.5 LED red<br>57.404.8755.5 LED green | 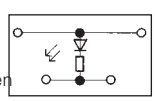 R = 2.2 K<br>0.35 W | 35 x 27 x 7,5 EN 60715 98.300.0000.0 1<br>35 x 24 x 15 EN 60715 98.360.0000.0 1<br>9006 EN 60715 G-32 98.190.0000.0 1<br>WE 1/U Z5.523.5753.0 100 |
| 57.404.7455.9 LED red | 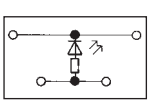 R = 2.2 K<br>0.35 W | 9708/2 S 35 Z5.522.8553.0 100<br>9708 Z5.522.7053.0 100 |
| 57.404.7955.5<br>57.404.8855.9<br>with inverted diodes | 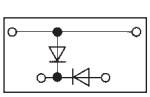 1 A/1000 V | |
| 57.404.8455.5 | 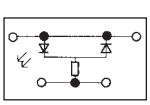 1 A/1000 V<br>R = 6.8 K<br>0.6 W | |
| 57.404.6255.9 | 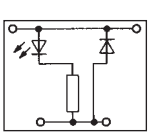 1 A/1000 V<br>R = 2.2 K<br>0.35 W | |

## WK 4 E SL/U

| fine stranded | solid | V | A |
|---|---|---|---|
| 0.5 – 4 mm² | 0.5 – 6 mm² | 500 V/6 kV/3*) | |
| No. 22-12 AWG | | | |
| No. 22-10 AWG | | | |
| 6.2 mm | | | 9 mm |

| Type | Part no. | Std. pack |
|---|---|---|
| WK 4 E SL/U | 57.504.9255.0 | 100 |
| 35 x 27 x 7,5 EN 60715 | 98.300.0000.0 | 1 |
| 35 x 24 x 15 EN 60715 | 98.360.0000.0 | 1 |
| 9006 EN 60715 G-32 | 98.190.0000.0 | 1 |
| WE 1/U | Z5.523.5753.0 | 100 |
| 9708/2 S 35 | Z5.522.8553.0 | 100 |
| 9708 | Z5.522.7053.0 | 100 |

* CL I, ZN1, AExe II

# Multi-tier feed-through block

selos

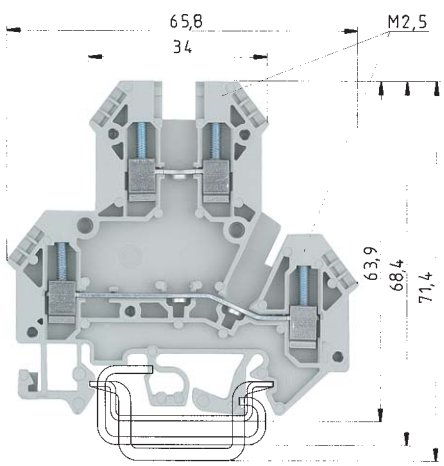


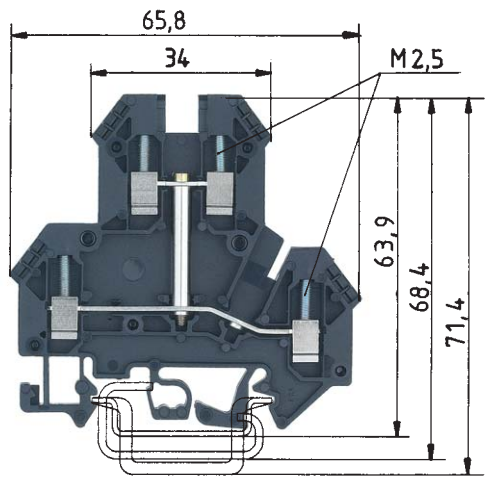


| | | WKN 2,5 E/U | | | WKN 2,5 E/U/VB | | |
|---|---|---|---|---|---|---|---|
| | | fine stranded | solid | V | fine stranded | solid | V |
| EN 60 947-7-1/DIN VDE 0611 T1 | | 0.5 – 2.5 mm² | 0.5 – 4 mm² | 500 V/6 kV/3 | 0.5 – 2.5 mm² | 0.5 – 4 mm² | 500 V/6 kV/3 |
| UL-ratings | field/factory wiring | No. 22-12 AWG | | 600 V | No. 22-12 AWG | | 600 V |
| CSA ratings | | No. 24-12 AWG | | 600 V | No. 24-12 AWG | | 600 V |
| Width | Wire strip length | 5 mm | | | 5 mm | | |
| Approvals | | * | | | | | |

| | | Type | Part no. | Std. pack | Type | Part no. | Std. pack |
|---|---|---|---|---|---|---|---|
| **Multi-tier feed-through block** | Color: gray | WKN 2,5 E/U | 57.403.7055.0 | 100 | | | |
| uper and lower feed-through tier | Color: black | | | | WKN 2,5 E/U/VB | 57.403.6955.1 | 100 |
| connected | | | | | | | |
| **Accessories** | | | | | | | |
| 1. Mounting rail TS 35, DIN rail 7.5mm high | L = 2 m | 35 x 27 x 7,5 EN 60715 | 98.300.0000.0 | 1 | 35 x 27 x 7,5 EN 60715 | 98.300.0000.0 | 1 |
| Mounting rail TS 35, DIN rail 1.5mm high | L = 2 m | 35 x 24 x 15 EN 60715 | 98.360.0000.0 | 1 | 35 x 24 x 15 EN 60715 | 98.360.0000.0 | 1 |
| Mounting rail TS 32, G rail | L = 2 m | 9006 EN 60715 G-32 | 98.190.0000.0 | 1 | 9006 EN 60715 G-32 | 98.190.0000.0 | 1 |
| 2. End clamp with U-foot | 10 mm wide | WE 1/U | Z5.523.5753.0 | 100 | WE 1/U | Z5.523.5753.0 | 100 |
| End clamp TS 35, with screw | 8 mm wide | 9708/2 S 35 | Z5.522.8553.0 | 100 | 9708/2 S 35 | Z5.522.8553.0 | 100 |
| End clamp TS 32, with screw | 7.5 mm wide | 9708 | Z5.522.7053.0 | 100 | 9708 | Z5.522.7053.0 | 100 |
| 3. End plate | 1.5 mm thick | APN 2,5 E | 07.312.1755.0 | 10 | APN 2,5 E | 07.312.1755.0 | 10 |
| 4. Partition | 1.5 mm thick | TWN 2,5 E | 07.312.1855.0 | 10 | TWN 2,5 E | 07.312.1855.0 | 10 |
| 5. Cross connector with screws for upper and lower | | | | | | | |
| feed-through tier, insulated | 2pole | IVB WK 2,5 - 2 | Z7.280.2227.0 | 10 | IVB WK 2,5 - 2 | Z7.280.2227.0 | 10 |
| | 3pole | IVB WK 2,5 - 3 | Z7.280.2327.0 | 10 | IVB WK 2,5 - 3 | Z7.280.2327.0 | 10 |
| | to 12pole | IVB WK 2,5 - 12 | Z7.280.3227.0 | 10 | IVB WK 2,5 - 12 | Z7.280.3227.0 | 10 |
| 6. Single cover f. cross conn. with marking facility | | AD VB 2,5 GELB | 04.326.2053.8 | 10 | AD VB 2,5 GELB | 04.326.2053.8 | 10 |
| 7. Cover strip for cross conn. over 10 blocks | | AD VB 5/10 GELB | 04.342.0556.8 | 10 | AD VB 5/10 GELB | 04.342.0556.8 | 10 |
| 8. Cover strip with warning symbol over 4 blocks | | | 04.343.4756.8 | 10 | | 04.343.4756.8 | 10 |
| 9. Sanp-in partition plate | | TS 2,5 GELB | 07.311.2053.8 | 10 | TS 2,5 GELB | 07.311.2053.8 | 10 |
| For marking systems see pages178-183 | | * CL I, ZN1, AExe II pending | | | | | |

# selos

# Sensor/actuator blocks 250 V with LED for 24 V

selos

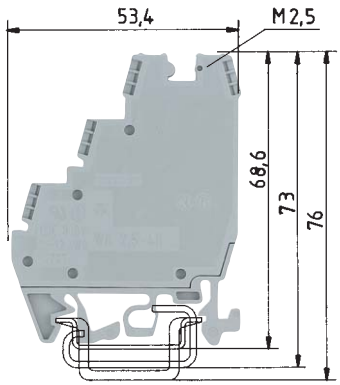


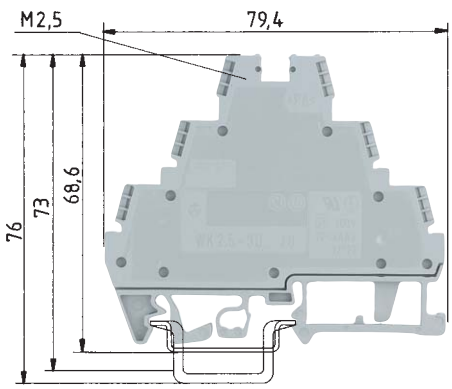


- Compact design for sensor/actuator wiring
- Insulated jumpers eliminate redundant wiring
- The blocks are also available with integrated LED for NPN or PNP sensors
- The use of cross connectors (jumper combs), requires partitions in order to maintain the air and creepage distances.

Indicator: R = 2.2 K; 0.35 W
Lamp color: green: 24 V DC

*) 24 V⎓ with LED

WK 2,5 - 4 KI/U-NGN

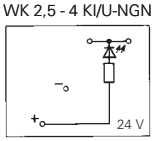


WK 2.5 - 4 KI/U-PGN

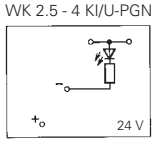


WK 2.5 - 3 D/U-NGN

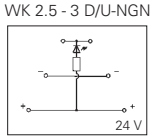


WK 2.5 - 3 D/U-PGN

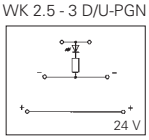


| | | WK 2,5-4 KI/U | | | WK 2,5-3 D/U | | |
|---|---|---|---|---|---|---|---|
| | | fine stranded | solid | V | fine stranded | solid | V |
| EN 60 947-7-1/DIN VDE 0611 T1 | | 0.5 – 2.5 mm² | 0.5 – 4 mm² | 250 V/4 kV/3*) | 0.5 – 2.5 mm² | 0.5 – 4 mm² | 400 V/6 kV/3*) |
| UL-ratings | field/factory wiring | No. 22-12 AWG | | 300 V*) | No. 22-12 AWG | | 300 V*) |
| CSA ratings | | No. 22-12 AWG | | 300 V*) | No. 22-12 AWG | | 300 V*) |
| Width | Wire strip length | 6 mm | | | 6 mm | | |
| Approvals | | EPM | | | | | |

| | | Type | Part no. | Std. pack | Type | Part no. | Std. pack |
|---|---|---|---|---|---|---|---|
| **Sensor/actuator block** | Color: gray | WK 2,5 - 4 KI/U | 57.503.7855.0 | 100 | | | |
| with LED (green) for NPN | Color: gray | WK 2,5 - 4 KI/U-NGN | 57.503.7955.0 | 100 | | | |
| with LED (green) for PNP | Color: gray | WK 2,5 - 4 KI/U-PGN | 57.503.8055.0 | 100 | | | |
| with LED (red) for PNP | Color: gray | | | | | | |
| **Three-tier feed through block** | Color: gray | | | | WK 2,5 - 3 D/U | 57.503.8855.0 | 50 |
| with LED for NPN | Color: gray | | | | WK 2,5 - 3 D/U-NGN | 57.503.8955.0 | 50 |
| with LED for PNP | Color: gray | | | | WK 2,5 - 3 D/U-PGN | 57.503.9055.0 | 50 |
| | | | | | | | |
| **Accessories** | | | | | | | |
| 1. Mounting rail TS 35, DIN rail, 7.5 mm high | L = 2 m | 35 x 27 x 7,5 EN 60715 | 98.300.0000.0 | 1 | 35 x 27 x 7,5 EN 60715 | 98.300.0000.0 | 1 |
| Mounting rail TS 35, DIN rail 15 mm high | L = 2 m | 35 x 24 x 15 EN 60715 | 98.360.0000.0 | 1 | 35 x 24 x 15 EN 60715 | 98.360.0000.0 | 1 |
| Mounting rail TS 32, G rail | L = 2 m | 9006 EN 60715 G-32 | 98.190.0000.0 | 1 | 9006 EN 60715 G-32 | 98.190.0000.0 | 1 |
| 2. End clamp with U-foot | 10 mm wide | WE 2/U | Z5.523.5653.0 | 100 | WE 2/U | Z5.523.5653.0 | 100 |
| End clamp TS 35, with screw | 8 mm wide | 9708/2 S 35 | Z5.522.8553.0 | 100 | 9708/2 S 35 | Z5.522.8553.0 | 100 |
| End clamp TS 32, with screw | 7.5 mm wide | 9708 | Z5.522.7053.0 | 100 | 9708 | Z5.522.7053.0 | 100 |
| 3. Partition, 2 mm thick | Color: gray | TW 2,5 - 3 K/U | 07.312.0555.0 | 10 | TW 2,5 - 3 D/U | 07.312.1255.0 | 50 |
| 4. Cross connector with screws, E-Cu | | | | | | | |
| insulated (jumpers) | 2pole, yellow | | | | IVB WK/3D-02 | Z7.270.0227.0 | 10 |
| | 3pole, yellow | | | | IVB WK/3D-03 | Z7.270.0327.0 | 10 |
| | to 12pole, yellow | | | | IVB WK/3D-12 | Z7.270.1227.0 | 10 |
| 5. Jumper comb, angled (middle & lower tier) | | | | | | | |
| insulated | 2pole, red | IVB WK 2,5-K-2 ROT | Z7.267.0227.5 | 10 | IVB WK 2,5-K-2 ROT | Z7.267.0227.5 | 10 |
| | to 12pole, red | IVB WK 2,5-K-12 ROT | Z7.267.1227.5 | 10 | IVB WK 2,5-K-12 ROT | Z7.267.1227.5 | 10 |
| insulated | 2pole blue | IVB WK 2,5-K-2 BLAU | Z7.267.0227.6 | 10 | IVB WK 2,5-K-2 BLAU | Z7.267.0227.6 | 10 |
| | to 12pole blue | IVB WK 2,5-K-12 BLAU | Z7.267.1227.6 | 10 | IVB WK 2,5-K-12 BLAU | Z7.267.1227.6 | 10 |

For more accessories see pages 160-177
For marking systems see pages 178-179 and 200-202

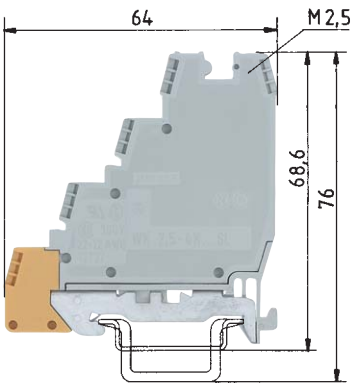


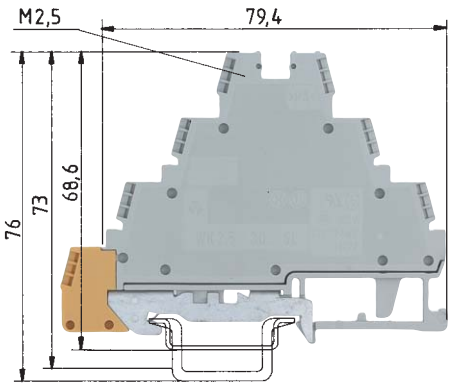


WK 2.5 - 4 KI SL-NGN

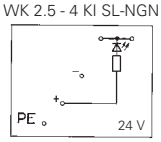


WK 2.5 - 4 KI SL-PGN
WK 2.5 - 4 KI SL-PRT

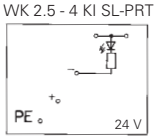


WK 2.5 - 3 D SL-NGN

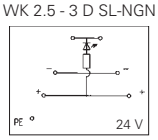


WK 2.5 - 3 D SL-PGN

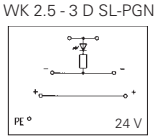


- The four tier terminals (signal, plus, minus, and shiedl/ground) are fully enclosed, clam shell with the ground connection snapped on the lower tier.
- These versions are designed only for TS 35 mounting rails due to the integrated ground foot.
- The rated voltage for the adjacent terminal also apply to the ground terminal.

Indicator: R = 2.2 K; 0.35 W
Lamp color: green: 24 V DC
red: 24 V DC

## WK 2,5-4 KI/SL

| fine stranded | solid | V | A |
|---|---|---|---|
| 0.5 – 2.5 mm² | 0.5 – 4 mm² | 250 V/4 kV/3*) | 24 |
| No. 22-12 | AWG | 300 V*) | 25 |
| No. 22-12 | AWG | 300 V*) | 25 |
| 6 mm | | | 7 mm |

EPM

## WK 2,5-3 D/SL

| fine stranded | solid | V | A |
|---|---|---|---|
| 0.5 – 2.5 mm² | 0.5 – 4 mm² | 400 V/6 kV/3*) | 24 |
| No. 22-12 | AWG | 300 V*) | 25 |
| No. 22-12 | AWG | 300 V*) | 25 |
| 6 mm | | | 7 mm |

| Type | Part no. | Std. pack | Type | Part no. | Std. pack |
|---|---|---|---|---|---|
| WK 2,5 - 4 KI SL | 56.503.7355.0 | 100 | | | |
| WK 2,5 - 4 KI SL-NGN | 56.503.7455.0 | 100 | | | |
| WK 2,5 - 4 KI SL-PGN | 56.503.7555.0 | 100 | | | |
| WK 2,5 - 4 KI SL-PRT | 56.503.7655.0 | 100 | | | |
| | | | WK 2,5 - 3 D SL | 56.503.8355.0 | 50 |
| | | | WK 2,5 - 3 D SL-NGN | 56.503.8455.0 | 50 |
| | | | WK 2,5 - 3 D SL-PGN | 56.503.8555.0 | 50 |
| 35 x 27 x 7,5 EN 60715 | 98.300.0000.0 | 1 | 35 x 27 x 7,5 EN 60715 | 98.300.0000.0 | 1 |
| 35 x 24 x 15 EN 60715 | 98.360.0000.0 | 1 | 35 x 24 x 15 EN 60715 | 98.360.0000.0 | 1 |
| WE 2/U | Z5.523.5653.0 | 100 | WE 2/U | Z5.523.5653.0 | 100 |
| 9708/2 S 35 | Z5.522.8553.0 | 100 | 9708/2 S 35 | Z5.522.8553.0 | 100 |
| TW 2,5 - 3 K/U | 07.312.0555.0 | 10 | TW 2,5 - 3 D/U | 07.312.1255.0 | 50 |
| | | | IVB WK/3D-02 | Z7.270.0227.0 | 10 |
| | | | IVB WK/3D-03 | Z7.270.0327.0 | 10 |
| | | | IVB WK/3D-12 | Z7.270.1227.0 | 10 |
| IVB WK 2,5-K-2 ROT | Z7.267.0227.5 | 10 | IVB WK 2,5-K-2 ROT | Z7.267.0227.5 | 10 |
| IVB WK 2,5-K-12 ROT | Z7.267.1227.5 | 10 | IVB WK 2,5-K-12 ROT | Z7.267.1227.5 | 10 |
| IVB WK 2,5-K-2 BLAU | Z7.267.0227.6 | 10 | IVB WK 2,5-K-2 BLAU | Z7.267.0227.6 | 10 |
| IVB WK 2,5-K-12 BLAU | Z7.267.1227.6 | 10 | IVB WK 2,5-K-12 BLAU | Z7.267.1227.6 | 10 |

# Sensor/actuator terminals with top entry system

# selos

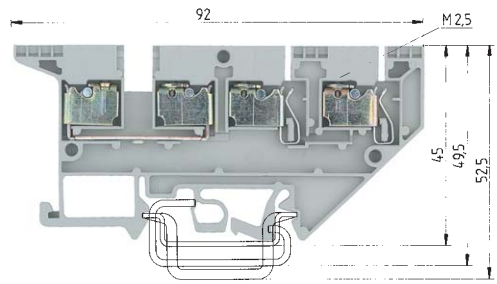


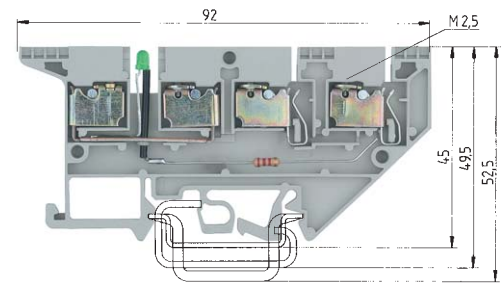


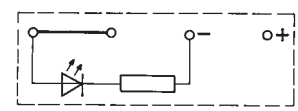


Indicator: R = 2.2 K; 0.35 W
Lamp color: green

| | | WK 2,5-4 KOI/U | | | | WK 2,5-4 KOI/U-NGN | | | |
|---|---|---|---|---|---|---|---|---|---|
| | | fine stranded | solid | V | A | fine stranded | solid | V | A |
| EN 60 947-7-1/DIN VDE 0611 T1 | | 0.5 - 2,5 mm² | 0.5 - 4 mm² | 400 V/6 kV/3 | 16*) | 0.5 - 2.5 mm² | 0.5 - 4 mm² | 24 DC | 16*) |
| UL-ratings | field/factory wiring | No. 22-12 | AWG | 300 V | 20/30 | No. 22-12 | AWG | 24 V | 20/30 |
| CSA ratings | | No. 22-12 | AWG | 300 V | 25 | No. 22-12 | AWG | 24 V | 25 |
| Width | Wire strip length | 5 mm | | | 10 mm | 5 mm | | | 10 mm |
| Approvals | | | | | | | | | |

| | | Type | Part no. | Std. pack | Type | Part no. | Std. pack |
|---|---|---|---|---|---|---|---|
| **Sensor/actuator terminal** | Color: gray | WK 2,5-4 KOI/U | 57.503.7055.0 | 50 | | | |
| **Sensor/actuator terminal W/ LED (NPN)** | Color: gray | | | | WK 2,5-4 KOI/U-NGN | 57.503.7155.0 | 50 |
| | | | | | | | |
| | | | | | | | |
| | | | | | | | |
| | | | | | | | |
| **Accessories** | | | | | | | |
| 1. Mounting rail TS 35, DIN rail 7.5mm high | L = 2 m | 35 x 27 x 7,5 EN 60715 | 98.300.0000.0 | 1 | 35 x 27 x 7,5 EN 60715 | 98.300.0000.0 | 1 |
| Mounting rail TS 35, DIN rail 1.5mm high | L = 2 m | 35 x 24 x 15 EN 60715 | 98.360.0000.0 | 1 | 35 x 24 x 15 EN 60715 | 98.360.0000.0 | 1 |
| Mounting rail TS 32, G rail | L = 2 m | 9006 EN 60715 G-32 | 98.190.0000.0 | 1 | 9006 EN 60715 G-32 | 98.190.0000.0 | 1 |
| 2. End clamp with U-foot | 10 mm wide | WE 1/U | Z5.523.5753.0 | 100 | WE 1/U | Z5.523.5753.0 | 100 |
| End clamp TS 35, with screw | 8 mm wide | 9708/2 S 35 | Z5.522.8553.0 | 100 | 9708/2 S 35 | Z5.522.8553.0 | 100 |
| End clamp TS 32, with screw | 7.5 mm wide | 9708 | Z5.522.7053.0 | 100 | 9708 | Z5.522.7053.0 | 100 |
| 3. End plate | 1.5 mm thick | AP 2,5-4 KO | 07.310.9355.0 | 50 | AP 2,5-4 KO | 07.310.9355.0 | 50 |
| | | | | | | | |
| 4. Partition plate | 1.5 mm thick | TW 2,5-4 KO | 07.310.9455.0 | 50 | TW 2,5-4 KO | 07.310.9455.0 | 50 |
| 5. Cross connector for voltage supply | | | | | | | |
| uninsulated | 2pole | VB WK 2,5 KO-2 | 07.257.0227.0 | 100 | VB WK 2,5 KO-2 | 07.257.0227.0 | 100 |
| | 3pole | VB WK 2,5 KO-3 | 07.257.0327.0 | 100 | VB WK 2,5 KO-3 | 07.257.0327.0 | 100 |
| | to 20pole | VB WK 2,5 KO-20 | 07.257.2027.0 | 50 | VB WK 2,5 KO-20 | 07.257.2027.0 | 50 |
| 6. Jumper bar for signal, | | | | | | | |
| uninsulated | 2pole | VB WK 2,5-2 | Z7.280.0227.0 | 10 | VB WK 2,5-2 | Z7.280.0227.0 | 10 |
| | 3pole | VB WK 2,5-3 | Z7.280.0327.0 | 10 | VB WK 2,5 3 | Z7.280.0327.0 | 10 |
| | to 6pole | VB WK 2,5-6 | Z7.280.0627.0 | 10 | VB WK 2,5-6 | Z7.280.0627.0 | 10 |
| 7. Single cover f. cross conn. with marking facility | | AD VB 2,5 GELB | 04.326.2053.8 | 10 | AD VB 2,5 GELB | 04.326.2053.8 | 10 |
| 8. Cover strip with test hole over 10 blocks | | AD VB 5/10 P GELB | 04.342.3556.8 | 10 | AD VB 5/10 P GELB | 04.342.3556.8 | 10 |
| 9. Cover strip for cross connectors over 10 blocks | | AD VB 5/10 | 04.342.0556.0 | 10 | AD VB 5/10 | 04.342.0556.0 | 10 |
| 10. Partition plate | | TS 2,5 GELB | 07.311.2053.8 | 10 | TS 2,5 GELB | 07.311.2053.8 | 10 |
| 11. Tear-off marking strip, red, marked "+" | | 9705 A/5/10 B + ROT | 04.855.0253.5 | 25 | 9705 A/5/10 B + ROT | 04.855.0253.5 | 25 |
| 12. Tear-off marking strip, blue, marked "-" | | 9705 A/5/10 B - BLAU | 04.855.0353.6 | 25 | 9705 A/5/10 B - BLAU | 04.855.0353.6 | 25 |
| | | | | | | | |
| | | | | | | | |
| For marking systems see pages 178-179 and 200-202 | | | | | | | |
| *) feed-through 16 A | | | | | | | |

# selos



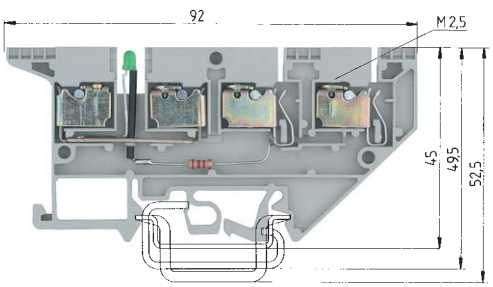


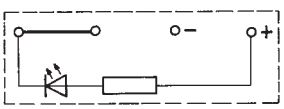


Indicator: R = 2.2 K; 0.35 W
Lamp color: green

Sensor/actuator blocks with TOP connection and universal foot for the connection of three wire sensors.
Space-saving design which distributes the plus-minus lines via pluggable, multi-pole jumpers.
You have to consider the maximum current carrying load of the cross connector of 32A: for the initiator blocks per infeed block, and for the current load per initiator.
Benefits:
- Plus-minus distribution via jumpering saves space and wiring material
- Only one feed-through block is required for the signal which guarantees a clear wiring
- One block per initiator guarantees a clear assignment of the power circuits
- Blocks with TOP connection guarantee clear wire connections
- The blocks of only 5mm width save mounting space
- Trouble shooting is easy as the switching status is indicated via LEDs
- Ample marking space

## WK 2,5-4 KOI/U-PGN

| fine stranded | solid | V | A |
|---|---|---|---|
| 0.5 - 2.5 mm² | 0.5 - 4 mm² | 24 DC | 16*) |
| No. 22-12 AWG | | 24 V | 20/30 |
| No. 22-12 AWG | | 24 V | 25 |
| 5 mm | | | 10 mm |

| Type | Part no. | Std. pack |
|---|---|---|
| WK 2,5-4 KOI/U-PGN | 57.503.7255.0 | 50 |
| AP 2,5-4 KO | 07.310.9355.0 | 50 |
| TW 2,5-4 KO | 07.310.9455.0 | 50 |
| VB WK 2,5 KO-2 | 07.257.0227.0 | 100 |
| VB WK 2,5 KO-3 | 07.257.0327.0 | 100 |
| VB WK 2,5 KO-20 | 07.257.2027.0 | 50 |
| VB WK 2,5-2 | Z7.280.0227.0 | 10 |
| VB WK 2,5 3 | Z7.280.0327.0 | 10 |
| VB WK 2,5-6 | Z7.280.0627.0 | 10 |
| AD VB 2,5 GELB | 04.326.2053.8 | 10 |
| AD VB 5/10 P GELB | 04.342.3556.8 | 10 |
| AD VB 5/10 | 04.342.0556.0 | 10 |
| TS 2,5 GELB | 07.311.2053.8 | 10 |
| 9705 A/5/10 B + ROT | 04.855.0253.5 | 25 |
| 9705 A/5/10 B - BLAU | 04.855.0353.6 | 25 |

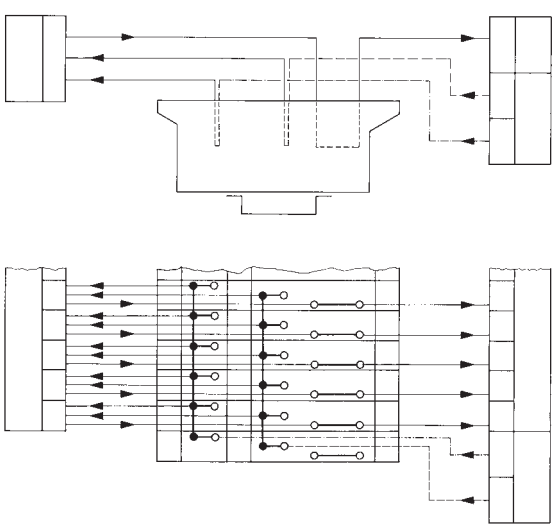

# Disconnect blocks with U-foot, type *WK*

selos

Fuse plug:
Nominal voltage: 250 V ~
Nominal current accord. to: VDE 0820 T2/IEC 257 at a power loss of 1.5 W.
– 6.3 A for single blocks
– 4 A for blocks mounted adjacent to each other

Indicator (24 V): Lamp color: red
Current consumed 10.3 mA
Indicator (110-220 V): Lamp color: red
Current input: 0.3 mA

*) Voltage and current are determined by the built-in LED and the fuse inserted into the fuse holder

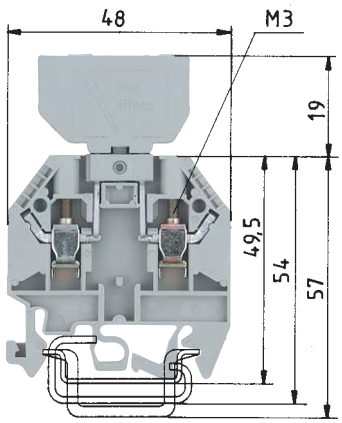


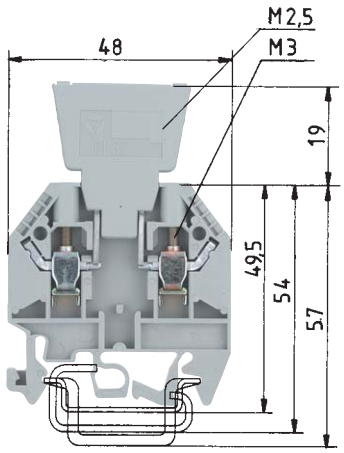


The current carrying load depends on the built-in component.
Temporary peak voltage 1000 V.

| Pole assignment of the diode: | Anode Cathode | Cathode [1] Anode[2] |
|---|---|---|

| | | WK 4 TKG... SIST | | | | WK 4 TKG... DIST | | | |
|---|---|---|---|---|---|---|---|---|---|
| EN 60 947-7-1/DIN VDE 0611 Teil 1 | | fine stranded | solid | V | A | fine stranded | solid | V | A |
| EN 60 127-6/DIN VDE 0820 T6 | | 0.5 – 4 mm² | 0.5 – 6 mm² | 800 V/8 kV/3*) | 6.3*) | 0.5 – 4 mm² | 0.5 – 6 mm² | 800 V/8 kV/3 | |
| UL-ratings | field/factory wiring | No. 22-10 AWG | | 300 V*) | 10 | No. 22-10 AWG | | 300 V | 10 |
| CSA ratings | | No. 20-10 AWG | | 250 V*) | 6.3 | No. 20-10 AWG | | 250 V | 6.3 |
| Width | Wire strip length | 6 mm | | | 9 mm | 6 mm | | | 9 mm |
| Approvals | | | | | | | | | |

| | | Type | Part no. | Std. pack | Type | Part no. | Std. pack |
|---|---|---|---|---|---|---|---|
| **Disconnect block** | Color: gray | WK 4 TKG/U | 57.504.4055.0 | 100 | WK 4 TKG/U | 57.504.4055.0 | 100 |
| Fuse holder for 5 x 20 fuse | Color: blue | Si ST | Z1.299.4055.0 | 10 | | | |
| Fuse holder with indicator (24 V) | Color: gray | Si ST LED | Z1.299.4155.0 | 10 | | | |
| Fuse holder with indicator (110-220 V) | Color: gray | Si ST GL | Z1.299.4255.0 | 10 | | | |
| Diode plug, without contacts $J_{max}$ = 10 A | Color: gray | | | | DIST ... | Z1.299.3055.0 | 10 |
| Diode plug - diode $J_{max}$ = 11 A | Color: gray | | | | DIST-1 N 4007-1[1] | Z1.299.3155.0 | 10 |
| Diode plug - diode $J_{max}$ = 11 A | Color: gray | | | | DIST-1 N 4007-2[2] | Z1.299.3355.0 | 10 |
| Diode plug with jumper $J_{max}$ = 10 A | Color: gray | | | | DIST-D | Z1.299.3255.0 | 10 |
| **Knife edge disconnect block** | Color: gray | | | | | | |
| | Color: blue | | | | | | |
| – with 2 test bolts | Color: gray | | | | | | |
| **Invertible plug disconnect block** | | | | | | | |
| m. Inver. plug w/o test bolt | Color: gray | | | | | | |
| – with test bolts left and right | Color: gray | | | | | | |
| Feed through block | Color: gray | | | | | | |
| | | | | | | | |
| **Accessories** | | | | | | | |
| 1. Mounting rail TS 35, DIN rail, 7.5 mm high | L = 2 m | 35 x 27 x 7,5 EN 60715 | 98.300.0000.0 | 1 | 35 x 27 x 7,5 EN 60715 | 98.300.0000.0 | 1 |
| Mounting rail TS 35, DIN rail 15 mm high | L = 2 m | 35 x 24 x 15 EN 60715 | 98.360.0000.0 | 1 | 35 x 24 x 15 EN 60715 | 98.360.0000.0 | 1 |
| Mounting rail TS 32, G rail | L = 2 m | 9006 EN 60715 G-32 | 98.190.0000.0 | 1 | 9006 EN 60715 G-32 | 98.190.0000.0 | 1 |
| 2. End clamp with U-foot | 10 mm wide | WE 2/U | Z5.523.5653.0 | 100 | WE 2/U | Z5.523.5653.0 | 100 |
| End clamp TS 35, with screw | 8 mm wide | 9708/2 S 35 | Z5.522.8553.0 | 100 | 9708/2 S 35 | Z5.522.8553.0 | 100 |
| End clamp TS 32, with screw | 7.5 mm wide | 9708 | Z5.522.7053.0 | 100 | 9708 | Z5.522.7053.0 | 100 |
| 3. End plate, 1.5 mm thick | Color: gray | AP 4 TK | 07.311.6155.0 | 10 | AP 4 TK | 07.311.6155.0 | 10 |
| | Color: blue | | | | | | |
| 4. Partition, 1.5 mm thick | Color: gray | TW 4 TK | 07.311.8155.0 | 10 | TW 4 TK | 07.311.8155.0 | 10 |
| | Color: blue | | | | | | |
| 5. Jumper comb | insulated 2pole | IVB 1 WK 4..-2 | Z7.255.4227.0 | 10 | IVB 1 WK 4..-2 | Z7.255.4227.0 | 10 |
| | to 6pole | IVB 1 WK 4..-6 | Z7.255.4627.0 | 10 | IVB 1 WK 4..-6 | Z7.255.4627.0 | 10 |
| 6. Cover f. cross conn. with marking facility | | | | | | | |
| 7. Snap-in partition plate with marking facility | | | | | | | |
| | | | | | | | |
| | | | | | | | |
| For marking systems see pages 178-179 and 200-202 | | | | | | | |

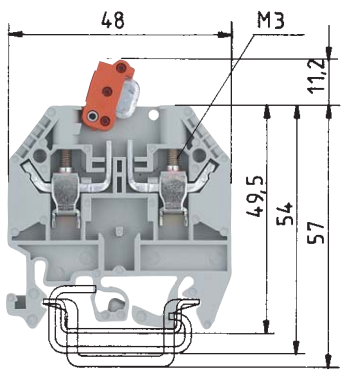


The disconnecting knife in these WK versions swing in and out on a pivot point. The distinctive color of the disconnecting lever signals the open state. The terminals can be connected with the lever open or closed. Designs with a different number and arrangement of test sockets permit safe measurements using the test plug.

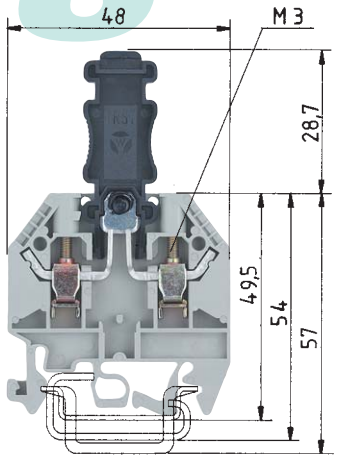


The plug in disconnect terminal has the same profile as the modular terminal WK4. The isolating connector is detachable and can be fitted as a dummy plug. This signals the open state. Designs with different numbers of test sockets permit safe measurements using the test plug.

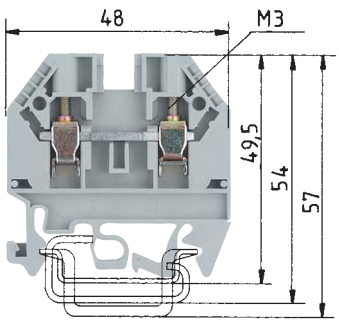


same dimensions as types
WK 4 TKG/U and WK 4/TKM/U
for symetry across the rail

## WK 4/TKM

| fine stranded | solid | V | A |
|---|---|---|---|
| 0.5 – 4 mm² | 0.5 – 6 mm² | 800 V/8 kV/3*) | 20 |
| No. 22-10 AWG | | 600 V | 20 |
| No. 22-10 AWG | | 600 V*) | 20 |
| 6 mm | | | 9 mm |

| Type | Part no. | Std. pack |
|---|---|---|
| WK 4/TKM/U | 57.504.2055.0 | 100 |
| WK 4/TKM/U BLAU | 57.504.2055.6 | 100 |
| WK 4/TKM/P3/U | 57.504.2355.0 | 100 |
| 35 x 27 x 7,5 EN 60715 | 98.300.0000.0 | 1 |
| 35 x 24 x 15 EN 60715 | 98.360.0000.0 | 1 |
| 9006 EN 60715 G-32 | 98.190.0000.0 | 1 |
| WE 2/U | Z5.523.5653.0 | 100 |
| 9708/2 S 35 | Z5.522.8553.0 | 100 |
| 9708 | Z5.522.7053.0 | 100 |
| AP 4 TK | 07.311.6155.0 | 10 |
| AP 4 TK BLAU | 07.311.6155.6 | 10 |
| TW 4 TK | 07.311.8155.0 | 10 |
| TW 4 TK BLAU | 07.311.8155.6 | |
| IVB 1 WK 4..-2 | Z7.255.4227.0 | 10 |
| IVB 1 WK 4..-6 | Z7.255.4627.0 | 10 |

*) **Version with test bolt:** CSA: 300 V
EN 60 947-7-1/DIN VDE 0611 T1 – 690 V/6 kV/3
Test bolt can be loaded with 1 A

## WK 4 TKG-TRST/U

| fine stranded | solid | V | A |
|---|---|---|---|
| 0.5 – 4 mm² | 0.5 – 6 mm² | 800 V/8 kV/3*) | 20 |
| No. 22-10 AWG | | 300 V | 10 |
| No. 22-10 AWG | | 600 V*) | 20 |
| 6 mm | | | 9 mm |

| Type | Part no. | Std. pack |
|---|---|---|
| WK 4 TKG-TRST/U | 57.504.4555.0 | 100 |
| WK 4 TKG-TRST P3/U | 57.504.4855.0 | 100 |
| 35 x 27 x 7,5 EN 60715 | 98.300.0000.0 | 1 |
| 35 x 24 x 15 EN 60715 | 98.360.0000.0 | 1 |
| 9006 EN 60715 G-32 | 98.190.0000.0 | 1 |
| WE 2/U | Z5.523.5653.0 | 100 |
| 9708/2 S 35 | Z5.522.8553.0 | 100 |
| 9708 | Z5.522.7053.0 | 100 |
| AP 4 TK | 07.311.6155.0 | 10 |
| TW 4 TK | 07.311.8155.0 | 10 |
| IVB 1 WK 4..-2 | Z7.255.4227.0 | 10 |
| IVB 1 WK 4..-6 | Z7.255.4627.0 | 10 |

*) **Version with test bolt:** CSA: 300 V
EN 60 947-7-1/DIN VDE 0611 T1 – 690 V/6 kV/3
Test bolt can be loaded with 1 A

## WK 4 TKS D/U

| fine stranded | solid | V | A |
|---|---|---|---|
| 0.5 – 4 mm² | 0.5 – 6 mm² | 800 V/8 kV/3 | 32 |
| No. 22-10 AWG | | 300 V | 25 |
| No. 20-10 AWG | | 600 V | 20 |
| 6 mm | | | 9 mm |

| Type | Part no. | Std. pack |
|---|---|---|
| WK 4 TKS D/U | 57.504.4455.0 | 100 |
| 35 x 27 x 7,5 EN 60715 | 98.300.0000.0 | 1 |
| 35 x 24 x 15 EN 60715 | 98.360.0000.0 | 1 |
| 9006 EN 60715 G-32 | 98.190.0000.0 | 1 |
| WE 2/U | Z5.523.5653.0 | 100 |
| 9708/2 S 35 | Z5.522.8553.0 | 100 |
| 9708 | Z5.522.7053.0 | 100 |
| AP 4 TK | 07.311.6155.0 | 10 |
| TW 4 TK | 07.311.8155.0 | 10 |
| IVB 1 WK 4..-2 | Z7.255.4227.0 | 10 |
| IVB 1 WK 4..-6 | Z7.255.4627.0 | 10 |
| AD VB 4 GELB | 04.326.2153.8 | 10 |
| TS 4 GELB | 07.311.2153.8 | 10 |

# Fuse blocks with U-foot, type *WK*

**selos**

Fuse terminals of this type have a hinged fuse carrier. This takes the mini 5 x 20, 5 x 25, and 5 x 30 mm (width of terminal 8mm) or 6.3 x 32 mm (width 10 mm). The swivel carrier has locking points both when open and closed and can be sealed. All terminals are available in two versions – with or without red LED indicator

Rated current in accordance with VDE 0820 T2/IEC 257

1) up to a power loss of 1.5 W
2) up to a power loss of 2.5 W
*) Voltage and current are determined by the LED installed and fuse used.

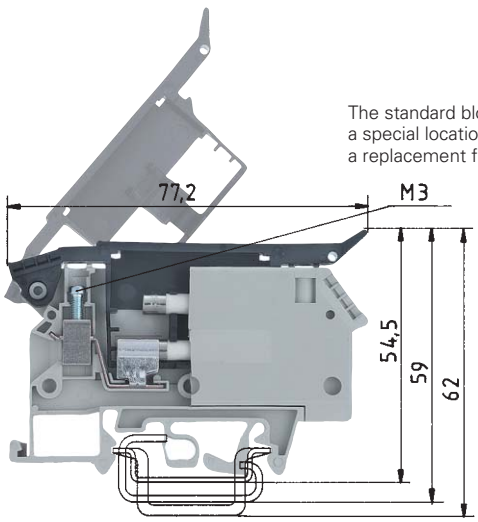


for 5 mm fuses

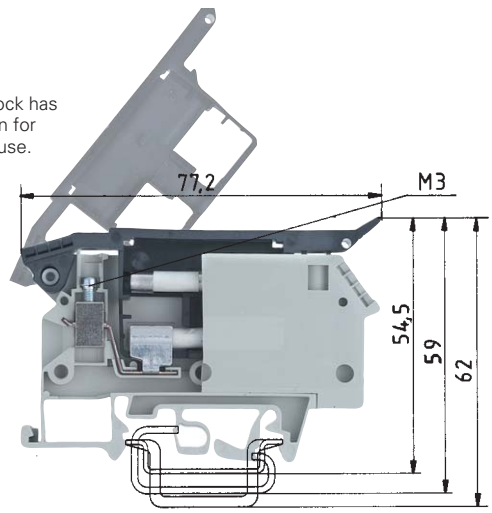


for 1/4 x 1 1/4 fuses

| | | WK 4 THSI 5... /U | | | | WK 4 THSI 6,3... /U | | | |
|---|---|---|---|---|---|---|---|---|---|
| | | fine stranded | solid | V | A | fine stranded | solid | V | A |
| EN 60 947-7-1, EN 60 127-6 | | 0.5 – 4 mm² | 0.5 – 6 mm² | 800 V/8 kV/3*) | 6,3 1) | 0.5 – 4 mm² | 0.5 – 6 mm² | 800 V/8 kV/3*) | 10 2) |
| UL-ratings | | No. 22-10 | AWG | 600 V*) | 15 | No. 22-10 | AWG | 600 V*) | 15 |
| CSA ratings | | No. 22-10 | AWG | 600 V*) | 6,3 | No. 22-10 | AWG | 600 V*) | 10 |
| Width | Wire strip length | 8 mm | | | 8 mm | 10 mm | | | 8 mm |
| Approvals | | | | | | | | | |

| | | Type | Part no. | Std. pack | Type | Part no. | Std. pack |
|---|---|---|---|---|---|---|---|
| **Fuse block** | Color: gray | WK 4/THSi 5 ... U | 57.904.5355.0 | 50 | WK 4/THSi 6,3 ... U | 57.904.6355.0 | 50 |
| – with LED | 5 - 12 V ~/⎓ current consumed. 2.3-7 mA | WK 4/THSi 5 LED 12 U | 57.904.5455.0 | 50 | WK 4/THSi 6,3 LED 12 U | 57.904.6455.0 | 50 |
| – with LED | 12 - 24 V ~/⎓ current consumed. 2.8-6.2 mA | WK 4/THSi 5 LED 24 U | 57.904.5555.0 | 50 | WK 4/THSi 6,3 LED 24 U | 57.904.6555.0 | 50 |
| – with LED | 24 - 60 V ~/⎓ current consumed. 1.5-4 mA | WK 4/THSi 5 LED 60 U | 57.904.5655.0 | 50 | WK 4/THSi 6,3 LED 60 U | 57.904.6655.0 | 50 |
| – with lamp | 110 -250 V ~/⎓ current consumed. 0.13 – 0.55 mA | WK 4/THSi 5 GL 250 U | 57.904.5755.0 | 50 | WK 4/THSi 6,3 GL 250 U | 57.904.6755.0 | 50 |
| – with lamp | 380 -500 V ~/⎓ current consumed. 0.2-0.3 mA | WK 4/THSi 5 GL 500 U | 57.904.5855.0 | 50 | WK 4/THSi 6,3 GL 500 U | 57.904.6855.0 | 50 |
| **Fuse block** | Color: gray | | | | | | |
| – with screw cap A DIN 41674 for G-fuses DIN 41571, 250 V, 5 x 20 mm | | | | | | | |
| – with screw cap B DIN 41674 for G fuses DIN 41576, 250 V, 5 x 25 mm | | | | | | | |
| – with screw cap A DIN 41674 for G-fuses , 500 V, 5 x 30 mm | | | | | | | |
| – with screw cap for G-fuses, 500 V, ¼ x 1¼" (6.3 x 32 mm) | | | | | | | |
| Feed-through block, same dimensions as fuse block | Color: gray | | | | | | |
| **Accessories** | | | | | | | |
| 1. Mounting rail TS 35, DIN rail, 7.5 mm high | L = 2 m | 35 x 27 x 7,5 EN 60715 | 98.300.0000.0 | 1 | 35 x 27 x 7,5 EN 60715 | 98.300.0000.0 | 1 |
| Mounting rail TS 35, DIN rail 15mm high | L = 2 m | 35 x 24 x15 EN 60715 | 98.360.0000.0 | 1 | 35 x 24 x 15 EN 60715 | 98.360.0000.0 | 1 |
| Mounting rail TS 32, G rail | L = 2 m | 9006 EN 60715 G-32 | 98.190.0000.0 | 1 | 9006 EN 60715 G-32 | 98.190.0000.0 | 1 |
| 2. End clamp with U-foot | 10 mm wide | WE 1/U | Z5.523.5753.0 | 100 | WE 1/U | Z5.523.5753.0 | 100 |
| End clamp TS 35, with screw | 8 mm wide | 9708/2 S 35 | Z5.522.8553.0 | 100 | 9708/2 S 35 | Z5.522.8553.0 | 100 |
| End clamp TS 32, with screw | 7.5 mm wide | 9708 | Z5.522.7053.0 | 100 | 9708 | Z5.522.7053.0 | 100 |
| 3. End plate, 1.5 mm thick | Color: gray | | | | | | |
| 4. Cross connector with screws, E-Cu | | | | | Jumper combs available on request | | |
| uninsulated | 2pole | | | | | | |
| | 3pole | | | | | | |
| | to 6pole | | | | | | |
| 5. Transparent cover (for 1 block) | | | | | | | |
| 6. Connecting strip for ganging levers together | red | VST WK4 THSI | 05.563.8053.0 | 50 | VST WK4 THSI | 05.563.8053.0 | 50 |
| For marking systems see pages 178-179 and 200-202 | | | | | Jumper combs available upon request | | |

# selos



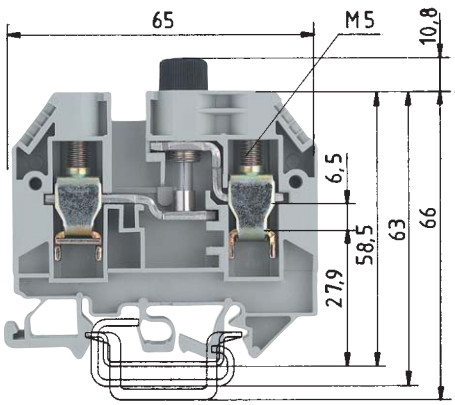


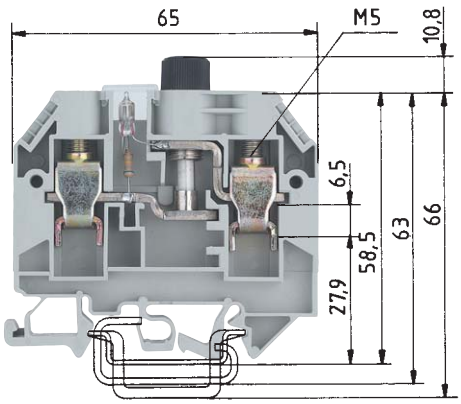


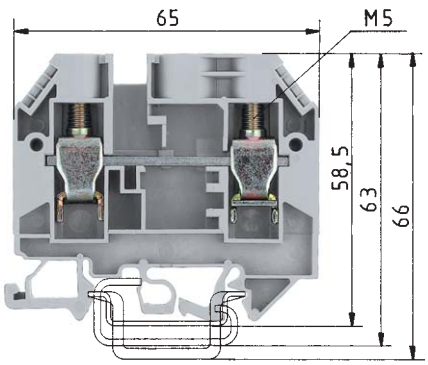


*) Voltage and current are determined by the built-in LED and the inserted G-fuse.
9) 6.3 A up to a power loss of 1.6 W
10) 10 A up to a power loss of 2.5 W

*) Voltage and current are determined by the built-in indicator and the inserted G-fuse.
7) 6.3 A up to a power loss of 1.6 W
8) 10 A up to a power loss of 2.5 W

## WK 10/SI ... /U

| fine stranded | solid/stranded | V | A |
|---|---|---|---|
| 1 – 10 mm² | 1 – 16 mm² | 500 V/6 kV/3*) | 10*) |
| No. 22-6 AWG | | 600 V*) | 15 |
| No. 16-6 AWG | | 600 V*) | max. 15 |
| 12 mm | | | 13 mm |

1) 2) 3) 4) LR 5) 6) 7) 8)

## WK 10/SI ... /U with indicator

| fine stranded | solid/stranded | V | A |
|---|---|---|---|
| 1 – 10 mm² | 1 – 16 mm² | 500 V/6 kV/3*) | max. 10*) |
| No. 22-6 AWG | | 600 V*) | 15 |
| No. 16-6 AWG | | 600 V*) | max. 15 |
| 12 mm | | | 13 mm |

1) 2) 3) 4) 5) 6)

## WK 10/SI U D

| fine stranded | solid/stranded | V | A |
|---|---|---|---|
| 1 – 10 mm² | 1 – 16 mm² | 500 V/6 kV/3 | 57 |
| No. 22-6 AWG | | 600 V | 50 |
| No. 16-6 AWG | | 600 V | 65 |
| 12 mm | | | 13 mm |

| Type | Part no. | Std. pack |
|---|---|---|
| WK 10/Si U 5 x 20 2) - 8) 9) 10) | 57.910.5055.0 | 50 |
| WK 10/Si U 5 x 25 2) - 8) 9) 10) | 57.910.5155.0 | 50 |
| WK 10/Si U 5 x 30 2) - 8) 10) | 57.910.5255.0 | 50 |
| WK 10/Si U 6,3 x 32 1) - 8) 10) | 57.910.5355.0 | 50 |
| 35 x 27 x 7,5 EN 60715 | 98.300.0000.0 | 1 |
| 35 x 24 x 15 EN 60715 | 98.360.0000.0 | 1 |
| 9006 EN 60715 G-32 | 98.190.0000.0 | 1 |
| WE 1/U | Z5.523.5753.0 | 100 |
| 9708/2 S 35 | Z5.522.8553.0 | 100 |
| 9708 | Z5.522.7053.0 | 100 |
| AP 10/Si | 07.311.4155.0 | 10 |
| VB WK 10/Si-2 | Z7.287.0227.0 | 10 |
| VB WK 10/Si-3 | Z7.287.0327.0 | 10 |
| VB WK 10/Si-6 | Z7.287.0627.0 | 10 |
| | 04.312.2056.0 | 100 |

Screw cap made from thermoset type 131 and silver-plated brass

| Type | Part no. | Std. pack |
|---|---|---|
| WK 10/Si U 5 x 20M, NGL 2) - 6) 7) 8) | 57.910.5455.0 | 50 |
| WK 10/Si U 5 x 20M, GLB 2) - 6) 7) 8) | 57.910.5855.0 | 50 |
| WK 10/Si U 6,3 x 32M, NGL 1) - 6) 8) | 57.910.5755.0 | 50 |
| WK 10/Si U 6,3 x 32M, GLB 1) - 6) 8) | 57.910.6155.0 | 50 |
| 35 x 27 x 7,5 EN 60715 | 98.300.0000.0 | 1 |
| 35 x 24 x 15 EN 60715 | 98.360.0000.0 | 1 |
| 9006 EN 60715 G-32 | 98.190.0000.0 | 1 |
| WE 1/U | Z5.523.5753.0 | 100 |
| 9708/2 S 35 | Z5.522.8553.0 | 100 |
| 9708 | Z5.522.7053.0 | 100 |
| AP 10/Si | 07.311.4155.0 | 10 |
| VB WK 10/Si-2 | Z7.287.0227.0 | 10 |
| VB WK 10/Si-3 | Z7.287.0327.0 | 10 |
| VB WK 10/Si-6 | Z7.287.0627.0 | 10 |
| | 04.312.2056.0 | 100 |

| | VDE | CSA | UL |
|---|---|---|---|
| **57.910.5453.0** Indicator Current consumed: 0.16 – 0.8 mA 9) | 110 - 250 V ~ | 500 V | 150 V |
| **57.910.5853.0** Indicator Current consumed: 24 mA 10) | 28 V ~ | 28 V | 28 V |
| **57.910.5753.0** Indicator Current consumed: 0.16 – 0.8 mA 9) | 110 - 500 V ~ | 500 V | 150 V |
| **57.910.6153.0** Indicator Current consumed: 24 mA 10) | 28 V ~ | 28 V | 28 V |

Lamp color of the indicator: 9) red, 10) yellow

| Type | Part no. | Std. pack |
|---|---|---|
| WK 10/Si U D | 57.910.4955.0 | 50 |
| 35 x 27 x 7,5 EN 60715 | 98.300.0000.0 | 1 |
| 35 x 24 x 15 EN 60715 | 98.360.0000.0 | 1 |
| 9006 EN 60715 G-32 | 98.190.0000.0 | 1 |
| WE 1/U | Z5.523.5753.0 | 100 |
| 9708/2 S 35 | Z5.522.8553.0 | 100 |
| 9708 | Z5.522.7053.0 | 100 |
| AP 10/Si | 07.311.4155.0 | 10 |
| VB WK 10/Si-2 | Z7.287.0227.0 | 10 |
| VB WK 10/Si-3 | Z7.287.0327.0 | 10 |
| VB WK 10/Si-6 | Z7.287.0627.0 | 10 |
| | 04.312.2056.0 | 100 |

# Fuse blocks
# with U-foot, type *WK*

selos

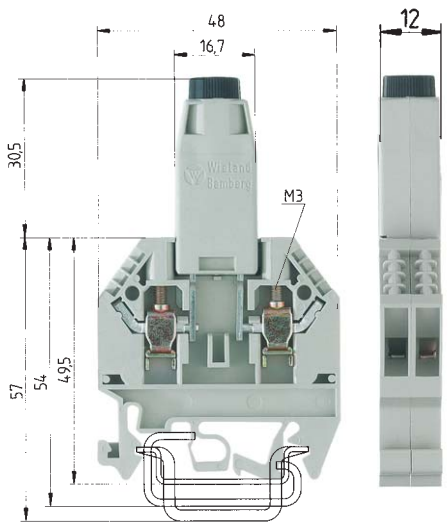


*) Voltage and current are determined by the fuse used.

Rated current in accordance to VDE 0820 T2/EN 60 127-2, up to a power loss of 1.6 W

## WK 4/Si-D/U 5 x 25

| | | fine stranded | solid | V | A |
|---|---|---|---|---|---|
| EN 60 947-7-1, EN 60 127-6 | | 0.5 – 4 mm² | 0.5 – 6 mm² | 800 V/8 kV/3*) | 6.3*) |
| UL-ratings | | | | | |
| CSA ratings | | No. 20-10 | AWG | 250 V | 10 |
| Width | Wire strip length | 12 mm | | | 9 mm |
| Approvals | | | | | |

| | | Type | Part no. | Std. pack |
|---|---|---|---|---|
| **Fuse block** | Color: gray | | | |
| – Fused feed through terminal block | | | | |
| (G-screw cap B DIN 41674, 5 x 25 mm – 250 V/6.3 A) | | WK 4/Si-D/U 5 x 25 | 57.504.1655.0 | 50 |
| – Fused feed through terminal block | | | | |
| (G-screw cap A DIN 41674, 5 x 20 mm – 250 V/6.3 A) | | WK 4/Si-D/U 5 x 20 | 57.504.1755.0 | 50 |
| | | | | |
| **Accessories** | | | | |
| 1. Mounting rail TS 35, DIN rail, 7.5 mm high | L = 2 m | 35 x 27 x 7,5 EN 60715 | 98.300.0000.0 | 1 |
| Mounting rail TS 35, DIN rail 1.5mm high | L = 2 m | 35 x 24 x 15 EN 60715 | 98.360.0000.0 | 1 |
| Mounting rail TS 32, G rail | | 9006 EN 60715 G-32 | 98.190.0000.0 | 1 |
| 2. End clamp with U-foot | 10 mm wide | WE 1/U | Z5.523.5753.0 | 100 |
| End clamp TS 35, with screw | 8 mm wide | 9708/2 S 35 | Z5.522.8553.0 | 100 |
| End clamp TS 32, with screw | 7.5 mm wide | 9780 | Z5.522.7053.0 | 100 |
| 3. End plate | 1.5 mm wide | AP 4 TK | 07.311.6155.0 | 10 |

For marking systems see pages 178-179 and 200-202

# selos

# Fuse block for NEOZED® mounting on TS 35 and TS 32 rail

selos

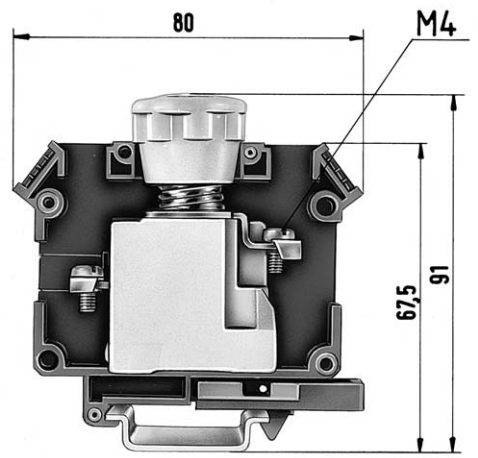


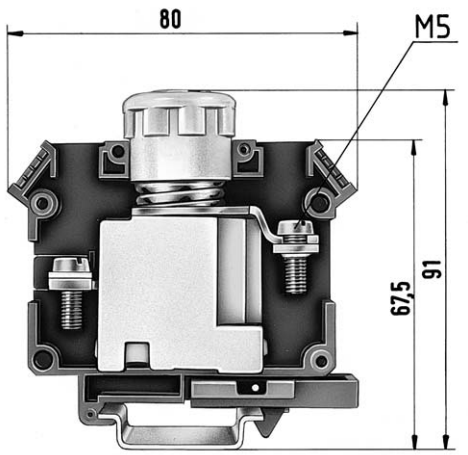


*) Current and voltage are determined by the fuse

| | | 9700 B/30 Si E 14/S 35 | | | 2–16 A | 9700 B/30 Si E 18/S 35 | | | 2–63 A |
|---|---|---|---|---|---|---|---|---|---|
| | | fine stranded | solid | V | A | fine stranded | solid/stranded | V | A |
| DIN VDE 0636 | | 1.5 – 4 mm² | 1.5 – 4 mm² | 400 V ~*) | 16*) | 1.5 – 25 mm² | 1.5 – 25 mm² | 400 V ~*) | 63*) |
| UL-ratings | | | | | | | | | |
| CSA ratings | | | | | | | | | |
| Width | Wire strip length | 30 mm | | | 10 mm | 30 mm | | | 12 mm |
| Approvals | | | | | | | | | |

| | | Type | Part no. | Std. pack | Type | Part no. | Std. pack |
|---|---|---|---|---|---|---|---|
| **Fuse block** | Color: gray | | | | | | |
| complete with closed insulating housing | | 9700 B/30 Si E 14/S 35 | 56.904.4055.0 | 20 | 9700 B/30 Si E 18/S 35 | 56.925.4055.0 | 20 |
| | | | | | | | |
| | | | | | | | |
| **Accessories** | | | | | | | |
| 1. Mounting rail TS 35, DIN rail, 7.5 mm high | L = 2 m | 35 x 27 x 7,5 EN 60715 | 98.300.0000.0 | 1 | 35 x 27 x 7,5 EN 60715 | 98.300.0000.0 | 1 |
| Mounting rail TS 35, DIN rail 1.5mm high | L = 2 m | 35 x 24 x 15 EN 60715 | 98.360.0000.0 | 1 | 35 x 24 x 15 EN 60715 | 98.360.0000.0 | 1 |
| Mounting rail TS 32, G rail | | | | | | | |
| 2. End clamp with U-foot | 10 mm wide | WE 1/U | Z5.523.5753.0 | 100 | WE 1/U | Z5.523.5753.0 | 100 |
| End clamp TS 35, with screw | 8 mm wide | 9708/2 S 35 | Z5.522.8553.0 | 100 | 9708/2 S 35 | Z5.522.8553.0 | 100 |
| End clamp TS 32, with screw | 7.5 mm wide | | | | | | |
| 3. NEOZED® adapter sleeve | 2 A – pink | | 05.595.9200.0 | 50 | | 05.595.5900.0 | 50 |
| | 4 A – brown | | 05.595.9300.0 | 50 | | 05.595.6000.0 | 50 |
| | 6 A – green | | 05.595.9400.0 | 50 | | 05.595.6100.0 | 50 |
| | 10 A – red | | 05.595.9500.0 | 50 | | 05.595.6200.0 | 50 |
| | 16 A – gray | | | | | 05.595.6300.0 | 50 |
| | 20 A – blue | | | | | 05.595.6400.0 | 50 |
| | 25 A – yellow | | | | | 05.595.6500.0 | 50 |
| | 35 A – black | | | | | 05.595.6600.0 | 50 |
| | 50 A – white | | | | | 05.595.6700.0 | 50 |
| 4. Cover cap | | | 04.326.1053.0 | 100 | | 04.326.1053.0 | 100 |
| 5. Jumper comb | | | | | | | |
| | 6pole | | | | | 07.250.3027.0 | 25 |
| | uninsulated10pole | | | | | 07.250.3127.0 | 10 |
| 6. Special retaining clip | | | | | | 05.549.0500.0 | |
| | | | | | | | |
| | | | | | | | |
| | | | | | | | |
| | | | | | | | |
| | | | | | | | |
| | | | | | | | |
| | | | | | | | |
| For marking systems see pages 178-179 and 200-202 | | | | | | | |
| NEOZED® = registered trademark of Siemens AG | | | | | | | |

# selos



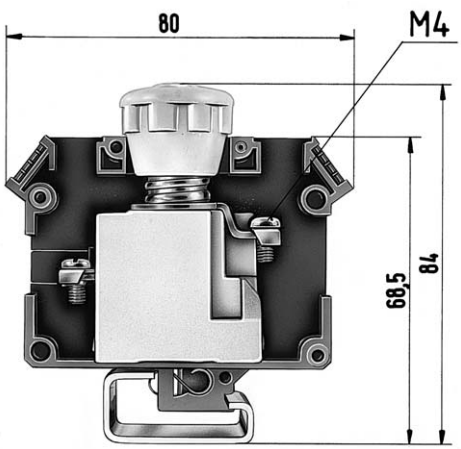


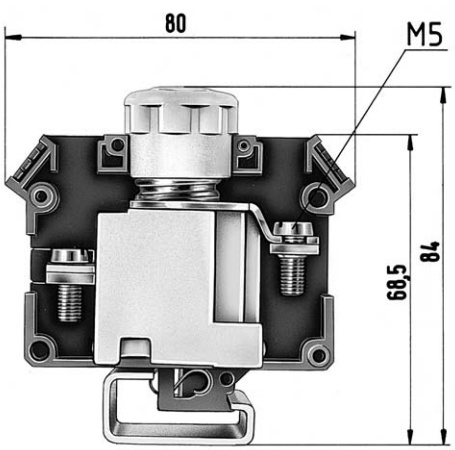


## 9700 B/30 Si E 14/S 32 — 2–16 A

| fine stranded | solid | V | A |
|---|---|---|---|
| 1.5 – 4 mm² | 1.5 – 4 mm² | 400 V ~*) | 16*) |

30 mm — 10 mm

| Type | Part no. | Std. pack |
|---|---|---|
| | | |
| 9700 B/30 Si E 14/S 35 | 54.904.4055.0 | 20 |
| | | |
| | | |
| | | |
| | | |
| | | |
| 9006 EN 60715 G-32 | 98.190.0000.0 | 1 |
| WE 1/U | Z5.523.5753.0 | 100 |
| | | |
| 9780 | Z5.522.7053.0 | 100 |
| | 05.595.9200.0 | 50 |
| | 05.595.9300.0 | 50 |
| | 05.595.9400.0 | 50 |
| | 05.595.9500.0 | 50 |
| | | |
| | | |
| | | |
| | | |
| | | |
| | 04.326.1053.0 | 100 |
| | | |
| | | |
| | | |
| | | |
| | | |
| | | |
| | | |
| | | |
| | | |

## 9700 B/30 Si E 18/S 32 — 2–63 A

| fine stranded | solid/stranded | V | A |
|---|---|---|---|
| 1.5 – 25 mm² | 1.5 – 25 mm² | 400 V ~*) | 63*) |

30 mm — 12 mm

| Type | Part no. | Std. pack |
|---|---|---|
| | | |
| 9700 B/30 Si E 18/S 32 | 54.925.4055.0 | 20 |
| | | |
| | | |
| | | |
| | | |
| | | |
| 9006 EN 60715 G-32 | 98.360.0000.0 | 1 |
| WE 1/U | Z5.523.5753.0 | 100 |
| | | |
| 9780 | Z5.522.7053.0 | 100 |
| | 05.595.5900.0 | 50 |
| | 05.595.6000.0 | 50 |
| | 05.595.6100.0 | 50 |
| | 05.595.6200.0 | 50 |
| | 05.595.6300.0 | 50 |
| | 05.595.6400.0 | 50 |
| | 05.595.6500.0 | 50 |
| | 05.595.6600.0 | 50 |
| | 05.595.6700.0 | 50 |
| | 04.326.1053.0 | 100 |
| | | |
| | 07.250.3027.0 | 25 |
| | 07.250.3127.0 | 10 |
| | 05.549.0500.0 | |
| | | |
| | | |
| | | |
| | | |
| | | |
| | | |
| | | |
| | | |
| | | |

# Compensating terminals with trimming potentiometer and as a potential divider / U-foot

selos

The compensating terminal is available from10 to 50 Ohms. The 12 mm width has two clamping points for connectring the adjustable resistance and two clamping points for connecting the return conductor. A marking facility is provided for each clamping point. Switch symbols on the insulating housing identify the connections and the direction of rotation for the adjustable resistance. The device operates with a linear characteristic. The fine spread of the main spindle enables the desired resistance value to be set accurately. Insulating housing with snap on end section.

Electrical specifications for the compensating terminal.

| | |
|---|---|
| Resistor range: | 0.25 Ω to 100 Ω |
| Resistor tolerance: | ± 10% |
| Resistor range: | 100 Ω to 50 kΩ |
| Resistor tolerance | ± 20% |
| Limited continuous resistance value: | 0.75 W to 70 °C |
| Max. load: | 100 mA |
| Temperature coefficient: | 0 to +500 ppm/°C |
| Max. operating voltage: | 300 V |

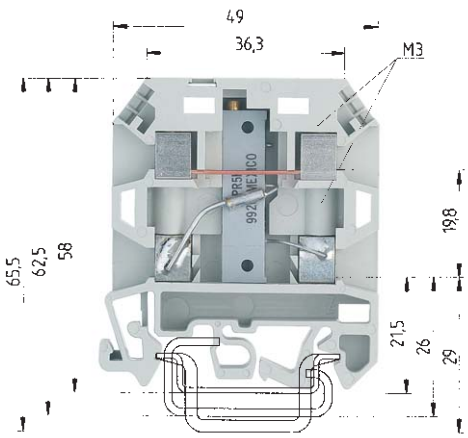


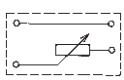

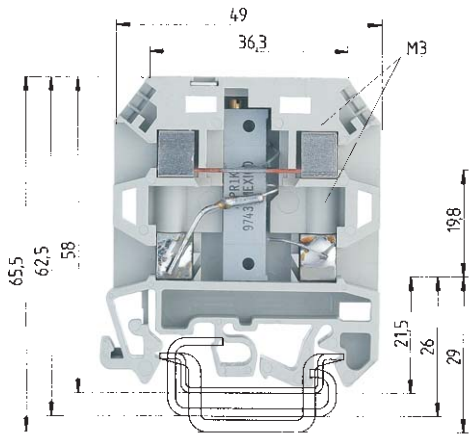


as voltage divider

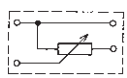

| | 9785 U/... | | | | 9785 U/... - SPT | | | |
|---|---|---|---|---|---|---|---|---|
| | fine stranded | solid | V | A | fine stranded | solid | V | A |
| EN 60 947-7-1/DIN VDE 0611 T1 | 0.5 – 2.5 mm² | 0.5 – 2.5 mm² | see the description | | 0.5 – 2,5 mm² | 0.5 – 2.5 mm² | see the description | |
| UL ratings | | | | | | | | |
| CSA ratings | | | | | | | | |
| Width | 12 mm | | | | 12 mm | | | |
| Wire strip length | | | | 9 mm | | | | 9 mm |
| Approvals | | | | | | | | |

| | | | Type | Part no. | Std. pack | Type | Part no. | Std. pack |
|---|---|---|---|---|---|---|---|---|
| **Compensating terminal** | Color: gray | 10 Ω | 9785 U/10 Ω | 57.904.0055.0 | 50 | 9785 U/10 Ω-SPT | 57.904.3955.0 | 50 |
| **with potentiometer** | | 20 Ω | 9785 U/20 Ω | 57.904.0155.0 | 50 | 9785 U/20 Ω-SPT | 57.904.4155.0 | 50 |
| | | 50 Ω | 9785 U/50 Ω | 57.904.0255.0 | 50 | 9785 U/50 Ω-SPT | 57.904.4255.0 | 50 |
| | | 100 Ω | 9785 U/100 Ω | 57.904.0355.0 | 50 | 9785 U/100 Ω-SPT | 57.904.4355.0 | 50 |
| | | 200 Ω | 9785 U/200 Ω | 57.904.0455.0 | 50 | 9785 U/200 Ω-SPT | 57.904.4455.0 | 50 |
| | | 510 Ω | 9785 U/500 Ω | 57.904.0555.0 | 50 | 9785 U/500 Ω-SPT | 57.904.4555.0 | 50 |
| | | 1 kΩ | 9785 U/1 kΩ | 57.904.0655.0 | 50 | 9785 U/1 kΩ-SPT | 57.904.4655.0 | 50 |
| | | 2 kΩ | 9785 U/2 kΩ | 57.904.0755.0 | 50 | 9785 U/2 kΩ-SPT | 57.904.4755.0 | 50 |
| | | 5 kΩ | 9785 U/5 kΩ | 57.904.0855.0 | 50 | 9785 U/5 kΩ-SPT | 57.904.4855.0 | 50 |
| | | 10 kΩ | 9785 U/10 kΩ | 57.904.0955.0 | 50 | 9785 U/10 kΩ-SPT | 57.904.4955.0 | 50 |
| | | 20 kΩ | 9785 U/20 kΩ | 57.904.1055.0 | 50 | 9785 U/20 kΩ-SPT | 57.904.5055.0 | 50 |
| | | 50 kΩ | 9785 U/50 kΩ | 57.904.1155.0 | 50 | 9785 U/50 kΩ-SPT | 57.904.5155.0 | 50 |
| **Diode terminal** | | | | | | | | |
| **Accessories** | | | | | | | | |
| 1. Mounting rail TS 35, DIN rail 7.5mm high | | L = 2 m | 35 x 27 x 7,5 EN 60715 | 98.300.0000.0 | 1 | 35 x 27 x 7,5 EN 60715 | 98.300.0000.0 | 1 |
| Mounting rail TS 35, DIN rail 1.5mm high | | L = 2 m | 35 x 24 x 15 EN 60715 | 98.360.0000.0 | 1 | 35 x 24 x 15 EN 60715 | 98.360.0000.0 | 1 |
| Mounting rail TS 32 | G rail | L = 2 m | 9006 EN 60715 G-32 | 98.190.0000.0 | 1 | 9006 EN 60715 G-32 | 98.190.0000.0 | 1 |
| 2. End clamp with U-foot | | 10 mm wide | WE 1/U | Z5.523.5753.0 | 100 | WE 1/U | Z5.523.5753.0 | 100 |
| End clamp TS 35, with screw | | 8 mm wide | 9708/2 S 35 | Z5.522.8553.0 | 100 | 9708/2 S 35 | Z5.522.8553.0 | 100 |
| End clamp TS 32, with screw | | 7.5 mm wide | 9708 | Z5.522.7053.0 | 100 | 9708 | Z5.522.7053.0 | 100 |
| 3. Jumper comb | | | | | | | | |
| uninsulated | | 2pole | VB 9786-2 | 07.253.0227.0 | 50 | VB 9786-2 | 07.253.0227.0 | 50 |
| | | 3pole | VB 9786-3 | 07.253.0327.0 | 50 | VB 9786-3 | 07.253.0327.0 | 50 |
| | | to 6pole | VB 9786-6 | 07.253.0627.0 | 50 | VB 9786-6 | 07.253.0627.0 | 50 |

For more accessories see pages 160-177
For marking systems see pages 178-179 and 200-202

# Diode block

selos

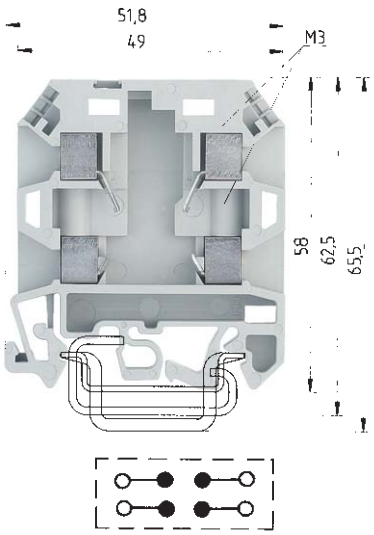


The diode terminal consists of an insulating housing with snap-on end section. It has four screw terminals with four marking points. Solder tabs inside the screw terminals are available to connect diodes or other components.

*) Current and voltage are determined by the electronic component.

Material:
Insulating housing: Polyamide 66/6, tracking resistant
Clamping body and screws: Nickel-plated copper alloy

## 9786 U/12

| fine stranded | solid | V | A |
|---|---|---|---|
| 0.5 –2.5 mm² | 0.5 – 2.5 mm² | 800 V/8 kV/3*) | 24** |
| No. 22-14 AWG | | 300 V | 6 |
| 12 mm | | | 9 mm |

| Type | Part no. | Std. pack |
|---|---|---|
| 9786 U/12 | 57.904.2055.0 | 50 |
| VB 9786-2 | 07.253.0227.0 | 50 |
| VB 9786-3 | 07.253.0327.0 | 50 |
| VB 9786-6 | 07.253.0627.0 | 50 |

# selos

Field of application:
In thermocouple measurement circuits, thermocouples are extended using compensating lines. Compensating lines are made of materials which have the same thermal emf values as the thermocouples up to 200 °C. In the thermocouple terminals, the combined metals are made up of the same materials as the compensating lines in accordance with DIN 43713 and DIN 43714 in order to ensure that no corrupting thermal electromotice forces are produced and the basic values in accordance with DIN IED 584 are maintained at the compensating line.

The thermocouple terminal consists of an insulating housing and a snap-in end section.

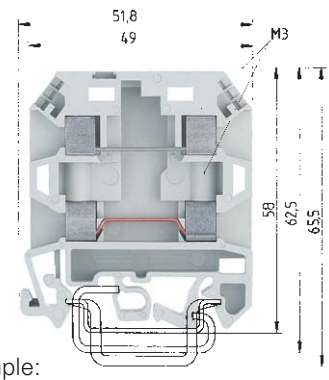


Example:
Fe/constantan Fe/CuNi 44

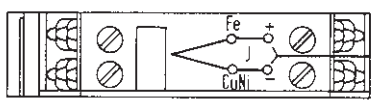


fully enclosed design
*) to the adjacent terminal block type 9786 U/...

## 9786 U/TSK...

| | | fine stranded | solid | V | A |
|---|---|---|---|---|---|
| EN 60 947-7-1/DIN VDE 0611 T1 | | 0.5 - 2,5 mm² | 0.5 - 2.5 mm² | 800 V/8 kV/3*) | |
| UL-ratings | | | | | |
| CSA ratings | | | | | |
| Width | Wire strip length | 12 mm | | | 9 mm |
| Approvals | | | | | |

| | | Type | Part no. | Std. pack |
|---|---|---|---|---|
| **Thermocouple terminal** | Typ T-Cu/CuNi 44 | 9786 U/TSK Cu-CuNi | 57.904.7355.0 | 50 |
| **Thermocouple terminal** | Typ E-NiCr/CuNi 44 | 9786 U/TSK NiCr-CuNi | 57.904.7055.0 | 50 |
| **Thermocouple terminal** | Typ J-Fe/CuNi 44 | 9786 U/TSK Fe-CuNi | 57.904.7155.0 | 50 |
| **Thermocouple terminal** | Typ K-NiCr/Ni | 9786 U/TSK NiCr-Ni | 57.904.7255.0 | 50 |
| **Thermocouple terminal** | Typ R-PtRh 13/Pt | 9786 U/TSK E-Cu-A-Cu | 57.904.7455.0 | 50 |
| Earth disconnect 24 - 48 V≃ with LED | Typ S-PtRh 10/Pt | | | |
| Earth disconnect 110 - 220 V ≃ with indicator lamp | | | | |
| **Accessories** | | | | |
| 1. Mounting rail TS 35, DIN rail 7.5 mm high | L = 2 m | 35 x 27 x 7,5 EN 60715 | 98.300.0000.0 | 1 |
| Mounting rail TS 35, DIN rail 1.5mm high | L = 2 m | 35 x 24 x 15 EN 60715 | 98.360.0000.0 | 1 |
| Mounting rail TS 32, G rail | L = 2 m | 9006 EN 60715 G-32 | 98.190.0000.0 | 1 |
| 2. End clamp with U-foot | 10 mm wide | WE 1/U | Z5.523.5753.0 | 100 |
| End clamp TS 35, with screw | 8 mm wide | 9708/2 S 35 | Z5.522.8553.0 | 100 |
| End clamp TS 32, with screw | 7.5 mm wide | 9708 | Z5.522.7053.0 | 100 |
| For more accessories see pages 160-177 | | | | |
| For marking systems see pages 178-179 and 200-202 | | | | |

# Ground disconnect blocks

selos

EN 60 204 part 1 / DIN VDE 0113 part 1 "Fitting industrial machines with electrical equipment".

9.4.3.1. Protection against unintentional start-up caused by earth faults.
Earth faults in control circuits may not cause an unintentional start-up, dangerous movements by the machine, or prevent the machine from stopping.

During normal operation the auxiliary circuit is connected to the funcational earth and the green (24 - 48 V) or yellow (110 - 220 V) status display is illuminated.

If a low resistance earth fault occurs, the line fuse will blow.

Once the contact separator is open, you can replace the fuse.

The illumination of the red lamp alone indicates an earth fault.

After the fault had been rectified, the green (24-48V) or yellow (110-220V) display will light up. The contacts should now be moved to the "on" position as a result of which the red lamp will go out.

The illumination of the yellow or green lamp and external display indicates that the auxiliary circuit had been reconnected to the functional earth.

selos

## 9760 U/8 TKE...

| fine stranded | solid/stranded | V | A |
|---|---|---|---|
| 1 – 10 mm² | 1 – 10 mm² | 24-48 V/110-220 V | 30 |
| No. 18-8 AWG | | 48 V/220 V | 25 |
| No. 18-8 AWG | | 48 V/220 V | 25 |
| 17.5 mm | | | 9 mm |

| Type | Part no. | Std. pack |
|---|---|---|
| | | |
| | | |
| | | |
| | | |
| | | |
| | | |
| | | |
| | | |
| 9760 U/8 TKE 48 | 57.110.1655.0 | 25 |
| 9760 U/8 TKE 220 | 57.110.1555.0 | 25 |
| | | |
| | | |
| 35 x 27 x 7,5 EN 60715 | 98.300.0000.0 | 1 |
| 35 x 24 x 15 EN 60715 | 98.360.0000.0 | 1 |
| 9006 EN 60715 G-32 | 98.190.0000.0 | 1 |
| WE 1/U | Z5.523.5753.0 | 100 |
| 9708/2 S 35 | Z5.522.8553.0 | 100 |
| 9708 | Z5.522.7053.0 | 100 |

Earth Disconnect terminal with LED 24 - 48 V≃

Normal operation

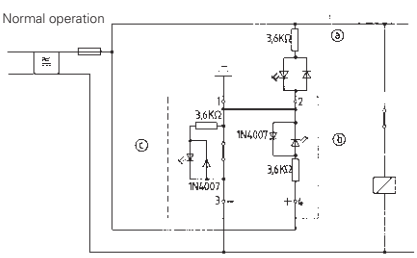


ⓐ external status display lights up
ⓑ green status display lights up
ⓒ red earth-fault indicator lights up

Ground fault

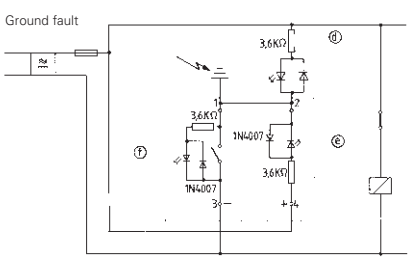


ⓓ external status display lights up
ⓔ green status display lights up
ⓕ red earth-fault indicator lights up

Earth Disconnect terminal with Neon Lamp

Normal operation

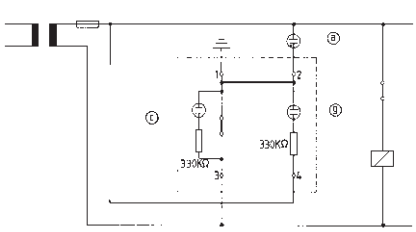


ⓖ yellow status display lights up

Ground fault

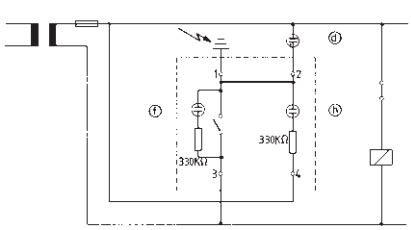


ⓗ yellow indicator light not flashing

# Modular terminal block with socket for PCB pluggable connector

# selos PLUG

for PC board terminal type:

Type 8113 B
Type 8313 B
Type 8113 B/VL
Type 8113 B/VR
Type 8113 B/Top

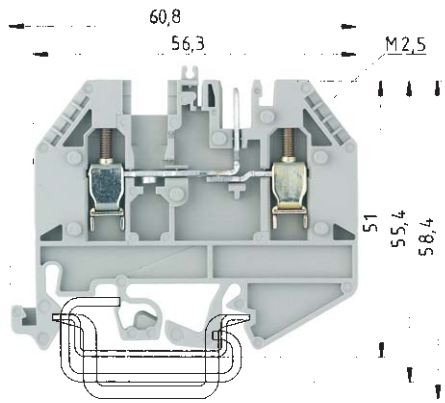


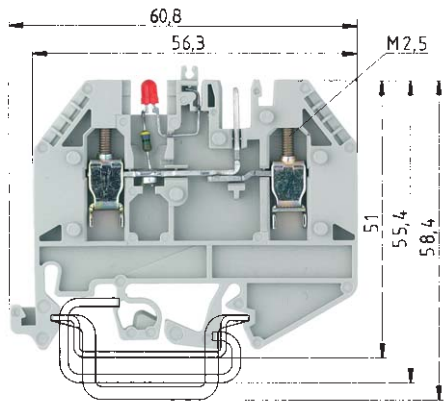


Indicator: R = 4.7 K; 0.5 W
Lamp color: red

[1] voltage rating determinted by lamp / LED

| | | WK 2,5 U/D/8113 S/V | | | WK 2,5 U/D/8113 S/V/LED 25 | | |
|---|---|---|---|---|---|---|---|
| | | fine stranded | solid | V | fine stranded | solid | V |
| EN 60 947-7-1/DIN VDE 0611 T1 | | 0.5 – 2.5 mm² | 0.5 – 4 mm² | 250 V/4 kV/3 | 0.5 – 2.5 mm² | 0.5 – 4 mm² | [1] |
| UL-ratings | field/factory wiring | No. 22-12 AWG | | 300 V[1] | No. 22-12 AWG | | 300 V[1] |
| CSA ratings | | No. 24-12 AWG | | 300 V [1] | No. 24-12 AWG | | 25 V due to LED/300 V[1] |
| Width | Wire strip length | 5 mm | | 9 mm | 5 mm | | 9 mm |
| Approvals | | | | | | | |

| | | Type | Part no. | Std. pack | Type | Part no. | Std. pack |
|---|---|---|---|---|---|---|---|
| **Pluggable terminal** | Color: gray | WK 2,5 U/D/8113 S/V... | 57.503.2155.0 | 50 | | | |
| **Pluggable terminal** with LED 25 V[1] | Color: gray | | | | WK 2,5 U/D/8113 S/V/LED 25 | 57.503.2255.0 | 50 |
| **Pluggable terminal** with LED 50 V[1] | Color: gray | | | | | | |
| **Supply terminal** | Color: blue | | | | | | |
| PCB Pluggable connector type 8113 | | | | | | | |
| (in ***wiecon*** section) | | | | | | | |
| | | | | | | | |
| **Accessories** | | | | | | | |
| 1. Mounting rail TS 35, DIN rail, 7.5 mm high | L = 2 m | 35 x 27 x 7,5 EN 60715 | 98.300.0000.0 | 1 | 35 x 27 x 7,5 EN 60715 | 98.300.0000.0 | 1 |
| Mounting rail TS 35, DIN rail 15mm high | L = 2 m | 35 x 24 x 15 EN 60715 | 98.360.0000.0 | 1 | 35 x 24 x 15 EN 60715 | 98.360.0000.0 | 1 |
| Mounting rail TS 35, G rail | L = 2 m | 9006 EN 60715 G-32 | 98.190.0000.0 | 1 | 9006 EN 60715 G-32 | 98.190.0000.0 | 1 |
| 2. End clamp with U-foot | 10 mm wide | 2/U | Z5.523.5653.0 | 100 | WE 2/U | Z5.523.5653.0 | 100 |
| End clamp TS 35 with screw | 8 mm wide | 9708/2 S 35 | Z5.522.8553.0 | 100 | 9708/2 S 35 | Z5.522.8553.0 | 100 |
| End clamp TS 32 with screw | 7.5 mm wide | 9708 | Z5.522.7053.0 | 100 | 9708 | Z5.522.7053.0 | 100 |
| 3. End plate 2.5 mm thick | Color: gray | AP 2,5 U/D/8113 S/V | 07.311.9055.0 | 10 | AP 2,5 U/D/8113 S/V | 07.311.9055.0 | 10 |
| End plate 2.5 mm thick | Color: blue | | | | | | |
| 4. Spacer 2.5 mm thick | Color: gray | ZP 2,5 U/D/8113 S/V | 07.311.9155.0 | 10 | ZP 2,5 U/D/8113 S/V | 07.311.9155.0 | 10 |
| Spacer 2.5 mm thick | Color: blue | | | | | | |
| use for 7.5 mm pitch pluggable connectors | | | | | | | |
| 5. Cross connector with screws, | 2pole | IVB WK 2,5-2 | Z7.280.2227.0 | 10 | IVB WK 2,5-2 | Z7.280.2227.0 | 10 |
| E-Cu, insulated | 3pole | IVB WK 2,5-3 | Z7.280.2327.0 | 10 | IVB WK 2,5-3 | Z7.280.2327.0 | 10 |
| | 12pole | IVB WK 2,5-12 | Z7.280.3227.0 | 10 | IVB WK 2,5-12 | Z7.280.3227.0 | 10 |
| 6. LED bus bar, tin-plated brass | L = 0.4 m | | | | | 05.561.4125.0 | 1 |
| 7. Cover strip for LED (transparent) | | AD VB 5/10 P | 04.342.3556.8 | 10 | AD VB 5/10 P | 04.342.3556.8 | 10 |
| 8. Single cover f. cross conn. with mark.facility | | AD VB 2,5 GELB | 04.326.2053.8 | 10 | AD VB 2,5 GELB | 04.326.2053.8 | 10 |
| 9. Cover stripfor PCB terminal | 24pole | | 04.343.9056.8 | 10 | | 04.343.9056.8 | 10 |
| with warning symbol | 24pole | | 04.343.9156.8 | 10 | | 04.343.9156.8 | 10 |
| 10. Snap-in partition | | TS 2,5 GELB | 07.311.2053.8 | 10 | TS 2,5 GELB | 07.311.2053.8 | 10 |
| 11. Coding strip | | | 05.561.0053.0 | 100 | | 05.561.0053.0 | 100 |
| 12. Locking piece | 10pole | | | | | | |
| | | | | | | | |
| | | | | | | | |
| | | | | | | | |
| For marking systems see pages 178-179 and 200-202 | | | | | | | |

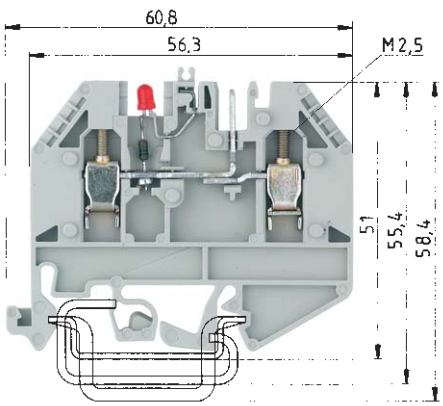


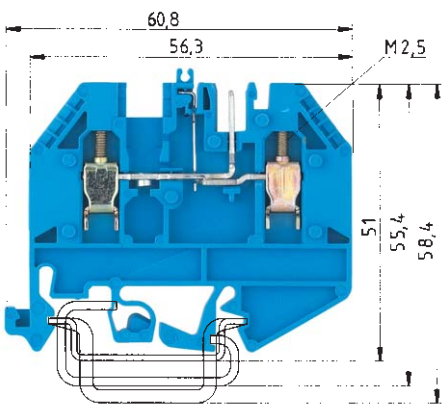


Indicator: R = 10 K; 0.5 W
Lamp color: red

[1] voltage rating determinted by lamp / LED

## WK 2,5 U/D/8113 S/V/LED 50

| fine stranded | solid | V | A |
|---|---|---|---|
| 0.5 – 2.5 mm² | 0.5 – 4 mm² | [1] | 12 |
| No. 22-12 AWG | | 300 V[1] | 15 |
| No. 24-12 AWG | | 50 V due to LED/300 V[1] | 15 |
| 5 mm | | | 9 mm |

## WK 2,5 U/D/8113 S/V/VK

| fine stranded | solid | V | A |
|---|---|---|---|
| 0.5 – 2.5 mm² | 0.5 – 4 mm² | 250 V/4 kV/3 | 12 |
| No. 22-12 AWG | | 300 V | 15 |
| No. 24-12 AWG | | 300 V | 15 |
| 5 mm | | | 9 mm |

| Type | Part no. | Std. pack | Type | Part no. | Std. pack |
|---|---|---|---|---|---|
| | | | | | |
| | | | | | |
| WK 2,5 U/D/8113 S/V/LED 50 | 57.503.2355.0 | 50 | | | |
| | | | WK 2,5 U/D/8113 S/V/VK | 57.503.2555.6 | 50 |
| | | | | | |
| | | | | | |
| | | | | | |
| | | | | | |
| 35 x 27 x 7,5 EN 60715 | 98.300.0000.0 | 1 | 35 x 27 x 7,5 EN 60715 | 98.300.0000.0 | 1 |
| 35 x 24 x 15 EN 60715 | 98.360.0000.0 | 1 | 35 x 24 x 15 EN 60715 | 98.360.0000.0 | 1 |
| 9006 EN 60715 G-32 | 98.190.0000.0 | 1 | 9006 EN 60715 G-32 | 98.190.0000.0 | 1 |
| WE 2/U | Z5.523.5653.0 | 100 | WE 2/U | Z5.523.5653.0 | 100 |
| 9708/2 S 35 | Z5.522.8553.0 | 100 | 9708/2 S 35 | Z5.522.8553.0 | 100 |
| 9708 | Z5.522.7053.0 | 100 | 9708 | Z5.522.7053.0 | 100 |
| AP 2,5 U/D/8113 S/V | 07.311.9055.0 | 10 | AP 2,5 U/D/8113 S/V | 07.311.9055.0 | 10 |
| | | | | | |
| ZP 2,5 U/D/8113 S/V | 07.311.9155.0 | 10 | ZP 2,5 U/D/8113 S/V | 07.311.9155.0 | 10 |
| | | | | | |
| | | | | | |
| IVB WK 2,5-2 | Z7.280.2227.0 | 10 | IVB WK 2,5-2 | Z7.280.2227.0 | 10 |
| IVB WK 2,5-3 | Z7.280.2327.0 | 10 | IVB WK 2,5-3 | Z7.280.2327.0 | 10 |
| IVB WK 2,5-12 | Z7.280.3227.0 | 10 | IVB WK 2,5-12 | Z7.280.3227.0 | 10 |
| | 05.561.4125.0 | 1 | | 05.561.4125.0 | 1 |
| AD VB 5/10 P | 04.342.3556.8 | 10 | AD VB 5/10 P | 04.342.3556.8 | 10 |
| AD VB 2,5 GELB | 04.326.2053.8 | 10 | AD VB 2,5 GELB | 04.326.2053.8 | 10 |
| | 04.343.9056.8 | 10 | | 04.343.9056.8 | 10 |
| | 04.343.9156.8 | 10 | | 04.343.9156.8 | 10 |
| TS 2,5 GELB | 07.311.2053.8 | 10 | TS 2,5 GELB | 07.311.2053.8 | 10 |
| | 05.561.0053.0 | 100 | | 05.561.0053.0 | 100 |
| | | | | | |
| | | | | | |
| | | | | | |
| | | | | | |
| | | | | | |

# Modular terminal block with socket for PCB pluggable connector

# selos PLUG

for PCB terminal types:

Type 8113 B
Type 8313 B
Type 8113 B/VL
Type 8113 B/VR
Type 8113 B/Top

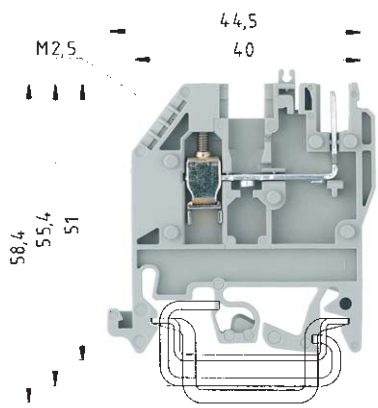


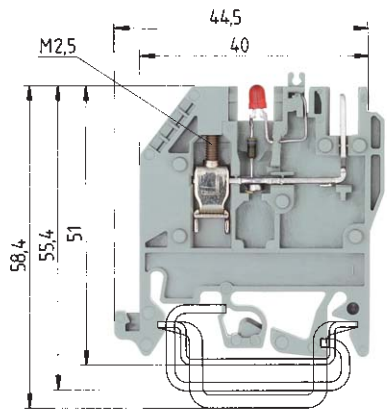


Indicator: R = 4.7 K; 0.5 W
Lamp color: red

[1] voltage rating determinted by lamp / LED

| | | WK 2,5 U/8113 S/V | | | WK 2,5 U/8113 S/V/LED 25 | | |
|---|---|---|---|---|---|---|---|
| | | fine stranded | solid | V | A | fine stranded | solid | V | A |
| DIN VDE 0110 | | 0.5 – 2.5 mm² | 0.5 – 4 mm² | 250 V/4 kV/3 | 12 | 0.5 – 2.5 mm² | 0.5 – 4 mm² | [1] | 12 |
| UL-ratings | field/factory wiring | No. 22-12 AWG | | 300 V | 15 | No. 22-12 AWG | | 300 V[1] | 15 |
| CSA ratings | | No. 24-12 AWG | | 300 V | 15 | No. 24-12 AWG | | 25 V due to LED/300 V[1] | 15 |
| Width | Wire strip length | 5 mm | | | 9 mm | 5 mm | | | 9 mm |
| Approvals | | | | | | | | | |

| | | Type | Part no. | Std. pack | Type | Part no. | Std. pack |
|---|---|---|---|---|---|---|---|
| **Pluggable terminal** | Color: gray | WK 2,5 U/8113 S/V... | 57.503.2655.0 | 50 | | | |
| **Pluggable terminal** with LED 25 V[1] | Color: gray | | | | WK 2,5 U/8113 S/V/LED 25 | 57.503.2755.0 | 50 |
| **Pluggable terminal** with LED 50 V[1] | Color: gray | | | | | | |
| **Supply terminal** | Color: blue | | | | | | |
| **Pluggable terminal** with pluggable connection for PCB | | | | | | | |
| PCB Pluggable connector type 8113 | | | | | | | |
| (in **wiecon** section) | | | | | | | |
| **Accessories** | | | | | | | |
| 1. Mounting rail TS 35, DIN rail, 7.5 mm high | L = 2 m | 35 x 27 x 7,5 EN 60715 | 98.300.0000.0 | 1 | 35 x 27 x 7,5 EN 60715 | 98.300.0000.0 | 1 |
| Mounting rail TS 35, DIN rail 15mm high | L = 2 m | 35 x 24 x 15 EN 60715 | 98.360.0000.0 | 1 | 35 x 24 x 15 EN 60715 | 98.360.0000.0 | 1 |
| Mounting rail TS 35, G rail | L = 2 m | 9006 EN 60715 G-32 | 98.190.0000.0 | 1 | 9006 EN 60715 G-32 | 98.190.0000.0 | 1 |
| 2. End clamp with U-foot | 10 mm wide | 2/U | Z5.523.5653.0 | 100 | WE 2/U | Z5.523.5653.0 | 100 |
| End clamp TS 35 with screw | 8 mm wide | 9708/2 S 35 | Z5.522.8553.0 | 100 | 9708/2 S 35 | Z5.522.8553.0 | 100 |
| End clamp TS 32 with screw | 7.5 mm wide | 9708 | Z5.522.7053.0 | 100 | 9708 | Z5.522.7053.0 | 100 |
| 3. End plate for right side, 2.5 mm thick | Color: gray | AP 2,5 U/8113 S/V | 07.312.1555.0 | 10 | AP 2,5 U/8113 S/V | 07.312.1555.0 | 10 |
| End plate for left side, 2.5 mm thick | Color: gray | AP 2,5 U/8113 | 07.312.4655.0 | 10 | AP 2,5 U/8113 | 07.312.4655.0 | 10 |
| End plate 2.5 mm thick | Color: blue | | | | | | |
| 4. Spacer, right side, 2.5 mm thick | Color: gray | ZP 2,5 U/8113 S/V | 07.312.1655.0 | 10 | ZP 2,5 U/8113 S/V | 07.312.1655.0 | 10 |
| Spacer 2.5 mm thick | Color: blue | | | | | | |
| use for 7.5 mm pitch pluggable connectors | | | | | | | |
| 5. Cross connector with screws, | 2pole | IVB WK 2,5-2 | Z7.280.2227.0 | 10 | | | |
| E-Cu, insulated | 3pole | IVB WK 2,5-3 | Z7.280.2327.0 | 10 | | | |
| | 12pole | IVB WK 2,5-12 | Z7.280.3227.0 | 10 | | | |
| 6. LED bus bar, tin-plated brass | L = 0.4 m | | | | | 05.561.4125.0 | 1 |
| 7. Cover strip for LED (transparent) | | | | | | | |
| 8. Single cover f. cross conn. with marking facility | | AD VB 2,5 GELB | 04.326.2053.8 | 10 | AD VB 2,5 GELB | 04.326.2053.8 | 10 |
| 9. Cover strip for PCB terminal | 24pole | | 04.343.9056.8 | 10 | | 04.343.9056.8 | 10 |
| with warning symbol | 24pole | | 04.343.9156.8 | 10 | | 04.343.9156.8 | 10 |
| 10. Snap-in partition plate | | TS 2,5 GELB | 07.311.2053.8 | 10 | TS 2,5 GELB | 07.311.2053.8 | 10 |
| 11. Coding strip | | | 05.561.0053.0 | 100 | | 05.561.0053.0 | 100 |
| 12. Locking piece | 10pole | | | | | | |

For marking systems see pages 178-179 and 200-202

# selos



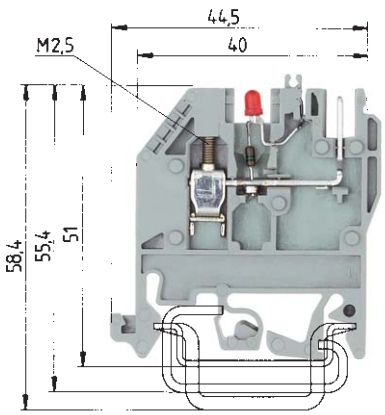


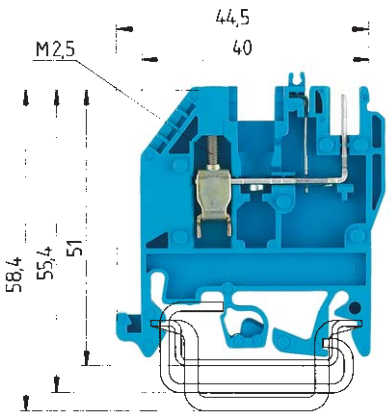


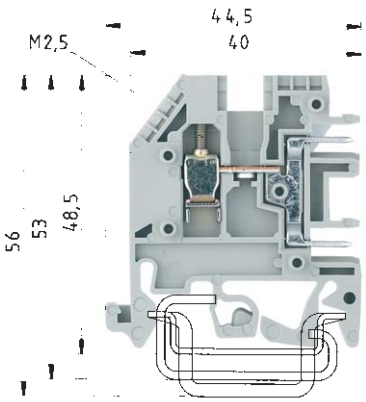


Indicator: R = 10 K; 0.5 W
Lamp color: red

[1] voltage rating determinted by lamp / LED

## WK 2,5 U/8113 S/V/LED 50

| fine stranded | solid | V | A |
|---|---|---|---|
| 0.5 – 2.5 mm² | 0.5 – 4 mm² | [1] | 12 |
| No. 22-12 AWG | | 300 V[1] | 15 |
| No. 24-12 AWG | | 50 V due to LED/300 V[1] | 15 |
| 5 mm | | | 9 mm |

## WK 2,5 U/8113 S/V/VK

| fine stranded | solid | V | A |
|---|---|---|---|
| 0.5 – 2.5 mm² | 0.5 – 4 mm² | 250 V/4 kV/3 | 12 |
| No. 22-12 AWG | | 300 V | 15 |
| No. 24-12 AWG | | 300 V | 15 |
| 5 mm | | | 9 mm |

## WK 2,5 U/D/8113 S/V/VK

| fine stranded | solid | V | A |
|---|---|---|---|
| 0,5 – 2,5 mm² | 0,5 – 4 mm² | 250 V/4 kV/3 | 12 |
| No. 22-12 AWG | | 300 V | 20 |
| No. 24-12 AWG | | 300 V | 15 |
| 5 mm | | | 9 mm |

| Type | Part no. | Std. pack | Type | Part no. | Std. pack | Type | Part no. | Std. pack |
|---|---|---|---|---|---|---|---|---|
| | | | | | | | | |
| | | | | | | | | |
| WK 2,5 U/8113 S/V/LED 50 | 57.503.2855.0 | 50 | | | | | | |
| | | | WK 2,5 U/8113 S/V/VK | 57.503.3055.6 | 50 | | | |
| | | | | | | WK 2,5 U/8113 S/H | 57.503.2055.0 | 100 |
| | | | | | | | | |
| | | | | | | | | |
| | | | | | | | | |
| 35 x 27 x 7,5 EN 60715 | 98.300.0000.0 | 1 | 35 x 27 x 7,5 EN 60715 | 98.300.0000.0 | 1 | 35 x 27 x 7,5 EN 60715 | 98.300.0000.0 | 1 |
| 35 x 24 x 15 EN 60715 | 98.360.0000.0 | 1 | 35 x 24 x 15 EN 60715 | 98.360.0000.0 | 1 | 35 x 24 x 15 EN 60715 | 98.360.0000.0 | 1 |
| 9006 EN 60715 G-32 | 98.190.0000.0 | 1 | 9006 EN 60715 G-32 | 98.190.0000.0 | 1 | 9006 EN 60715 G-32 | 98.190.0000.0 | 1 |
| WE 2/U | Z5.523.5653.0 | 100 | WE 2/U | Z5.523.5653.0 | 100 | WE 2/U | Z5.523.5653.0 | 100 |
| 9708/2 S 35 | Z5.522.8553.0 | 100 | 9708/2 S 35 | Z5.522.8553.0 | 100 | 9708/2 S 35 | Z5.522.8553.0 | 100 |
| 9708 | Z5.522.7053.0 | 100 | 9708 | Z5.522.7053.0 | 100 | 9708 | Z5.522.7053.0 | 100 |
| AP 2,5 U/8113 S/V | 07.312.1555.0 | 10 | | | | | | |
| AP 2,5 U/8113 | 07.312.4655.0 | 10 | AP 2,5 U/8113 | 07.312.4655.0 | 10 | | | |
| | | | AP 2,5 U/8113 S/V BL | 07.312.1555.6 | 10 | AP 2,5 U/8113 S/H***[)] | 07.311.9853.0 | |
| ZP 2,5 U/8113 S/V | 07.312.1655.0 | 10 | ZP 2,5 U/8113 S/V | 07.312.1655.0 | 10 | | | |
| | | | ZP 2,5 U/8113 S/V BL | 07.312.1655.6 | 10 | | | |
| | | | | | | | | |
| | | | IVB WK 2,5-2 | Z7.280.2227.0 | 10 | IVB WK 2,5-2 | Z7.280.2227.0 | 10 |
| | | | IVB WK 2,5-3 | Z7.280.2327.0 | 10 | IVB WK 2,5-3 | Z7.280.2327.0 | 10 |
| | | | IVB WK 2,5-12 | Z7.280.3227.0 | 10 | IVB WK 2,5-12 | Z7.280.3227.0 | 10 |
| | 05.561.4125.0 | 1 | | | | | | |
| | | | | | | | | |
| AD VB 2,5 GELB | 04.326.2053.8 | 10 | AD VB 2,5 GELB | 04.326.2053.8 | 10 | AD VB 2,5 GELB | 04.326.2053.8 | 10 |
| | 04.343.9056.8 | 10 | | 04.343.9056.8 | 10 | | | |
| | 04.343.9156.8 | 10 | | 04.343.9156.8 | 10 | | | |
| TS 2,5 GELB | 07.311.2053.8 | 10 | TS 2,5 GELB | 07.311.2053.8 | 10 | TS 2,5 GELB | 07.311.2053.8 | 10 |
| | 05.561.0053.0 | 100 | | 05.561.0053.0 | 100 | | 05.584.0053.0 | 100 |
| | | | | | | | 05.576.5853.0 | 25 |
| | | | | | | | | |
| | | | | | | | | |
| | | | | | | | | |

# Feed-through terminal blocks with screw/push-on connection

## selos PLUG

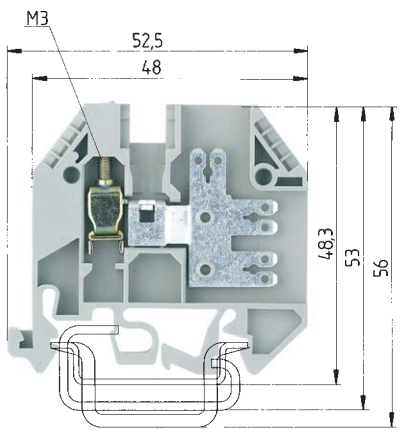


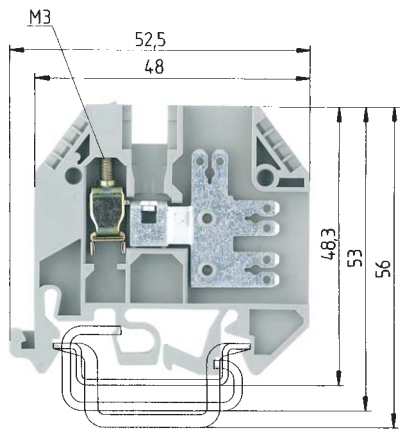


Push-on connectors 2.8 x 0.8 accord. to DIN 46247
Push-on connectors 6.3 x 0.8 accord. to DIN 46247

Push-on connectors 2.8 x 0.8 accord. to DIN 46247

| | | WK 4 3-6 S 1 K/U | | | | WK 4 5 S 2,8 1 K/U | | | |
|---|---|---|---|---|---|---|---|---|---|
| Nominal data when using insulating housing | | fine stranded | solid | V | A | fine stranded | solid | V | A |
| EN 60 947-7-1, EN 61 210 | | 0.5 – 4 mm² | 0.5 – 6 mm² | 800 V/8 kV/3 | 20*) | 0.5 – 4 mm² | 0.5 – 6 mm² | 800 V/8 kV/3 | 20*) |
| UL-ratings | field/factory wiring | No. 22-12 AWG | | 300 V | 10 | No. 22-12 AWG | | 300 V | 10 |
| CSA ratings | | No. 22-12 AWG | | 300 V | 10 | No. 22-12 AWG | | 300 V | 10 |
| Width | Wire strip length | 6 mm | | | 9 mm | 6 mm | | | 9 mm |
| Approvals | | | | | | | | | |

| | | Type | Part no. | Std. pack | Type | Part no. | Std. pack |
|---|---|---|---|---|---|---|---|
| **Terminal block with screw and** | | | | | | | |
| **push-on connectors** | Color: gray | | | | | | |
| Push-on with 6 connectors 2.8 x 0.8 | | WK 4 3-6 S 1 K/U | 57.504.3755.0 | 100 | | | |
| Push-on with 5 connectors 2.8 x 0.8 | | | | | WK 4 5 S 2,8 1 K/U | 57.504.3855.0 | 100 |
| **Distribution terminal** | Color: gray | | | | | | |
| Push-on with 10 connectors | | | | | | | |
| | | | | | | | |
| | | | | | | | |
| **Accessories** | | | | | | | |
| 1. Mounting rail TS 35, DIN rail, 7.5 mm high | L = 2 m | 35 x 27 x 7,5 EN 60715 | 98.300.0000.0 | 1 | 35 x 27 x 7,5 EN 60715 | 98.300.0000.0 | 1 |
| Mounting rail TS 35, DIN rail 15mm high | L = 2 m | 35 x 24 x 15 EN 60715 | 98.360.0000.0 | 1 | 35 x 24 x 15 EN 60715 | 98.360.0000.0 | 1 |
| Mounting rail TS 35, G rail | L = 2 m | 9006 EN 60715 G-32 | 98.190.0000.0 | 1 | 9006 EN 60715 G-32 | 98.190.0000.0 | 1 |
| 2. End clamp with U-foot | 10 mm wide | 2/U | Z5.523.5653.0 | 100 | WE 2/U | Z5.523.5653.0 | 100 |
| End clamp TS 35 with screw | 8 mm wide | 9708/2 S 35 | Z5.522.8553.0 | 100 | 9708/2 S 35 | Z5.522.8553.0 | 100 |
| End clamp TS 32 with screw | 7.5 mm wide | 9708 | Z5.522.7053.0 | 100 | 9708 | Z5.522.7053.0 | 100 |
| 3. End plate, 1.5 mm thick | Color: gray | AP4 3 S 1 K | 07.311.3855.0 | 10 | AP4 3 S 1 K | 07.311.3855.0 | 10 |
| | Color: blue | | | | | | |
| 4. Insulating housing for push-on connector | yellow | | | | | | |
| for H0. V-K 1.5 mm² | | | 05.592.7553.0 | 2000 | | 05.592.7553.0 | 2000 |
| for H0. V-K 2.5 mm² | | | 05.592.7653.0 | 2000 | | 05.592.7653.0 | 2000 |
| 5. Cross connector with screws, E-Cu, | | | | | | | |
| insulated | 2pole | IVB WK 4-2 | Z7.281.1227.0 | 10 | IVB WK 4-2 | Z7.281.1227.0 | 10 |
| | 3pole | IVB WK 4-3 | Z7.281.1327.0 | 10 | IVB WK 4-3 | Z7.281.1327.0 | 10 |
| | to 12pole | IVB WK 4-12 | Z7.281.2227.0 | 10 | IVB WK 4-12 | Z7.281.2227.0 | 10 |
| 6. Jumper rail, tin-plated brass | L = 0.4 m | | | | | | |
| 7. Cover strip for LED (transparent) | | | | | | | |
| 8. Single cover f. cross conn. with marking facility | | AD VB 4 GELB | 04.326.2153.8 | 10 | AD VB 4 GELB | 04.326.2153.8 | 10 |
| 9. Cover strip for cross conn. over 10 blocks | | AD VB 6/10 GELB | 04.342.0656.8 | 10 | AD VB 6/10 GELB | 04.342.0656.8 | 10 |
| 10. Partition plate | | TS 4 GELB | 07.311.2153.8 | 10 | TS 4 GELB | 07.311.2153.8 | 10 |
| 11. Coding strip | | | | | | | |
| | | | | | | | |
| | | | | | | | |
| | | | | | | | |
| For marking systems see pages 178-179 and 200-202 | | | | | *) Current carrying capability accord. to DIN 46249 | | |

# selos



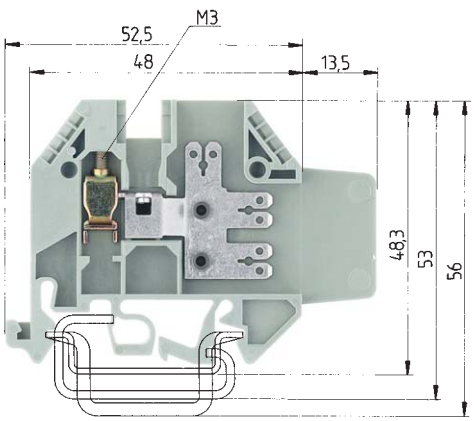


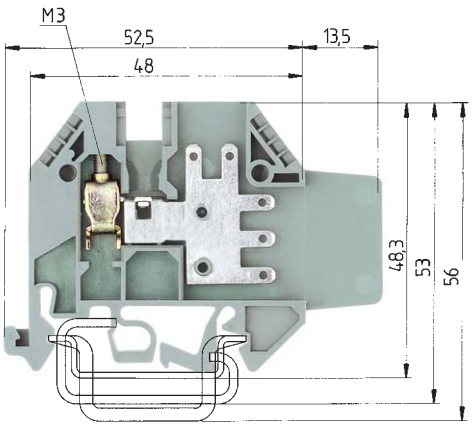


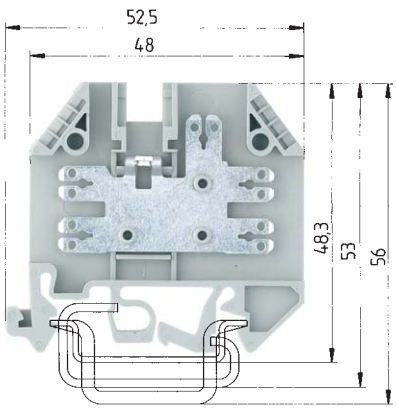


Push-on connectors 2.8 x 0.8 accord. to DIN 46247
Push-on connectors 6.3 x 0.8 accord. to DIN 46247

## WK 4-3-6 S 1 K/IW/U

| fine stranded | solid | V | A |
|---|---|---|---|
| 0.5 – 4 mm² | 0.5 – 6 mm² | 800 V/8 kV/3 | 20*) |
| No. 22-12 AWG | | 600 V | 10 |
| No. 22-12 AWG | | 300 V | 10 |
| 6 mm | | | 9 mm |

| Type | Part no. | Std. pack |
|---|---|---|
| | | |
| | | |
| WK 4 3-6 S 1 K/IW/U | 57.504.2755.0 | 100 |
| | | |
| | | |
| | | |
| | | |
| | | |
| 35 x 27 x 7,5 EN 60715 | 98.300.0000.0 | 1 |
| 35 x 24 x 15 EN 60715 | 98.360.0000.0 | 1 |
| 9006 EN 60715 G-32 | 98.190.0000.0 | 1 |
| WE 2/U | Z5.523.5653.0 | 100 |
| 9708/2 S 35 | Z5.522.8553.0 | 100 |
| 9708 | Z5.522.7053.0 | 100 |
| AP4 3 S 1 K | 07.311.3855.0 | 10 |
| | | |
| | | |
| | 05.592.7553.0 | 2000 |
| | 05.592.7653.0 | 2000 |
| | | |
| IVB WK 4-2 | Z7.281.1227.0 | 10 |
| IVB WK 4-3 | Z7.281.1327.0 | 10 |
| IVB WK 4-12 | Z7.281.2227.0 | 10 |
| | | |
| | | |
| AD VB 4 GELB | 04.326.2153.8 | 10 |
| AD VB 6/10 GELB | 04.342.0656.8 | 10 |
| TS 4 GELB | 07.311.2153.8 | 10 |

Push-on connectors 2.8 x 0.8 accord. to DIN 46247

## WK 4-5 S 2,8 1 K/IW/U

| fine stranded | solid | V | A |
|---|---|---|---|
| 0.5 – 4 mm² | 0.5 – 6 mm² | 800 V/8 kV/3 | 20*) |
| No. 22-12 AWG | | 600 V | 10 |
| No. 22-12 AWG | | 300 V | 10 |
| 6 mm | | | 9 mm |

| Type | Part no. | Std. pack |
|---|---|---|
| | | |
| | | |
| WK 4 5 S 2,8 1 K/IW/U | 57.504.2855.0 | 100 |
| | | |
| | | |
| | | |
| | | |
| | | |
| 35 x 27 x 7,5 EN 60715 | 98.300.0000.0 | 1 |
| 35 x 24 x 15 EN 60715 | 98.360.0000.0 | 1 |
| 9006 EN 60715 G-32 | 98.190.0000.0 | 1 |
| WE 2/U | Z5.523.5653.0 | 100 |
| 9708/2 S 35 | Z5.522.8553.0 | 100 |
| 9708 | Z5.522.7053.0 | 100 |
| AP4 3 S 1 K | 07.311.3855.0 | 10 |
| | | |
| | | |
| | 05.592.7553.0 | 2000 |
| | 05.592.7653.0 | 2000 |
| | | |
| IVB WK 4-2 | Z7.281.1227.0 | 10 |
| IVB WK 4-3 | Z7.281.1327.0 | 10 |
| IVB WK 4-12 | Z7.281.2227.0 | 10 |
| | | |
| | | |
| AD VB 4 GELB | 04.326.2153.8 | 10 |
| AD VB 6/10 GELB | 04.342.0656.8 | 10 |
| TS 4 GELB | 07.311.2153.8 | 10 |

Push-on connectors 2.8 x 0.8 accord. to DIN 46247
Push-on connectors 6.3 x 0.8 accord. to DIN 46247

## WK/5-10 S/U

| fine stranded | solid | V | A |
|---|---|---|---|
| | | 800 V/8 kV/3 | 20*) |
| | | 300 V | 10 |
| No. 22-12 AWG | | 300 V | 10 |
| 6 mm | | | |

| Type | Part no. | Std. pack |
|---|---|---|
| | | |
| | | |
| WK/5-10 S/U | 57.504.3655.0 | 100 |
| | | |
| | | |
| | | |
| | | |
| 35 x 27 x 7,5 EN 60715 | 98.300.0000.0 | 1 |
| 35 x 24 x 15 EN 60715 | 98.360.0000.0 | 1 |
| 9006 EN 60715 G-32 | 98.190.0000.0 | 1 |
| WE 2/U | Z5.523.5653.0 | 100 |
| 9708/2 S 35 | Z5.522.8553.0 | 100 |
| 9708 | Z5.522.7053.0 | 100 |
| AP 5 S | 07.311.4655.0 | 10 |
| | | |
| | | |
| | 05.592.7553.0 | 2000 |
| | 05.592.7653.0 | 2000 |
| | | |
| IVB WKI 4-2 | Z7.271.4227.0 | 10 |
| IVB WKI 4-3 | Z7.271.4327.0 | 10 |
| IVB WKI 4-12 | Z7.271.5227.0 | 10 |
| | | |
| | | |
| AD VB 4 GELB | 04.326.2153.8 | 10 |
| AD VB 6/10 GELB | 04.342.0656.8 | 10 |
| TS 4 GELB | 07.311.2153.8 | 10 |

# Distribution terminals for push-on connectors

# selos PLUG

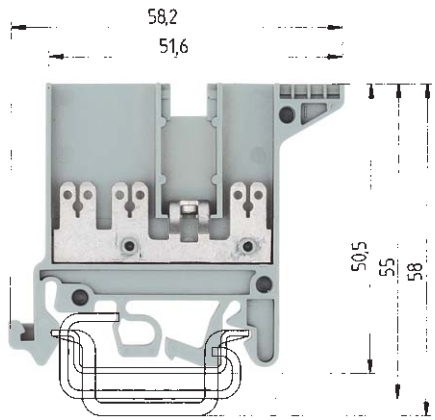


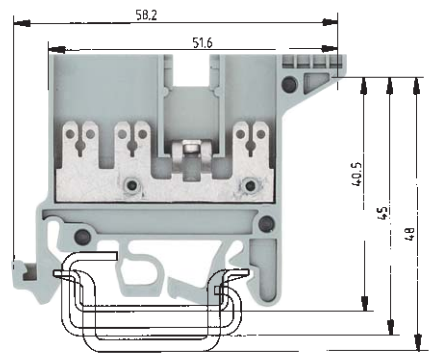


Current carrying capability in accordance with DIN 46249
Push-on connector
2.8 10 A
6.3 20 A

Current carrying capability in accordance with EN 60 947-7-1, EN 61 210
UL-ratings field/factory wiring
CSA ratings
Width Wire strip length
Approvals

Push-on connectors 2.8 x 0.8 accord. to DIN 46247
Push-on connectors 6.3 x 0.8 accord. to DIN 46247

## WK/3-6 S/IW/U

| fine stranded | solid | V | A |
|---|---|---|---|
| 0.5 – 4 mm² | 0.5 – 6 mm² | 800 V/8 kV/3 | 20 |
| | | 600 V | 10 |
| No. 22-12 AWG | | 300 V | 10 |
| 6 mm | | | |

Push-on connectors 2.8 x 0.8 accord. to DIN 46247
Push-on connectors 6.3 x 0.8 accord. to DIN 46247

## WK/3-6 S/U

| fine stranded | solid | V | A |
|---|---|---|---|
| | | 800 V/8 kV/3 | 20 |
| | | 300 V | 10 |
| No. 24-12 AWG | | 300 V | 10 |
| 6 mm | | | |

| | | Type | Part no. | Std. pack | Type | Part no. | Std. pack |
|---|---|---|---|---|---|---|---|
| **Distribution terminals** | | | | | | | |
| with 6 push-on connectors 2.8 x 0.8 | Color: gray | WK/3-6 S/IW/U | 57.504.6755.0 | 100 | WK/3-6 S/U | 57.504.6655.0 | 100 |
| **Rapid mounting feed-through block** | | | | | | | |
| | | | | | | | |
| **Accessories** | | | | | | | |
| 1. Mounting rail TS 35, DIN rail, 7.5 mm high | L = 2 m | 35 x 27 x 7,5 EN 60715 | 98.300.0000.0 | 1 | 35 x 27 x 7,5 EN 60715 | 98.300.0000.0 | 1 |
| Mounting rail TS 35, DIN rail 15mm high | L = 2 m | 35 x 24 x 15 EN 60715 | 98.360.0000.0 | 1 | 35 x 24 x 15 EN 60715 | 98.360.0000.0 | 1 |
| Mounting rail TS 35, G rail | L = 2 m | 9006 EN 60715 G-32 | 98.190.0000.0 | 1 | 9006 EN 60715 G-32 | 98.190.0000.0 | 1 |
| 2. End clamp with U-foot | 10 mm wide | 2/U | Z5.523.5653.0 | 100 | WE 2/U | Z5.523.5653.0 | 100 |
| End clamp TS 35 with screw | 8 mm wide | 9708/2 S 35 | Z5.522.8553.0 | 100 | 9708/2 S 35 | Z5.522.8553.0 | 100 |
| End clamp TS 32 with screw | 7.5 mm wide | 9708 | Z5.522.7053.0 | 100 | 9708 | Z5.522.7053.0 | 100 |
| 3. End plate, 2.5 mm thick | Color: gray | AP 3 S/IW | 07.311.4555.0 | 50 | AP 3 S | 07.311.4455.0 | 50 |
| End plate 2.5 mm thick | Color: blue | | | | | | |
| 4. Insulating sleeve for tab connector | yellow | | | | | | |
| for H0. V-K 1.5 mm² | | | 05.592.7553.0 | 2000 | | 05.592.7553.0 | 2000 |
| for H0. V-K 2.5 mm² | | | 05.592.7653.0 | 2000 | | 05.592.7653.0 | 2000 |
| 5. Cross connector with screws, E-Cu, | | | | | | | |
| uninsulated | 2pole | VB WK/...S/IW/U-2 | Z7.281.3227.0 | 10 | 9703/6-2 | Z7.211.0227.0 | 50 |
| | 3pole | VB WK/...S/IW/U-3 | Z7.281.3327.0 | 10 | 9703/6-3 | Z7.211.0327.0 | 50 |
| | to 6pole | VB WK/...S/IW/U-6 | Z7.281.3627.0 | 10 | 9703/6-6 | Z7.211.0627.0 | 50 |
| 6. Jumper rail, tin-plated brass | L = 0.4 m | | | | | | |
| 7. Cover strip for LED (transparent) | | | | | | | |
| 8. Single cover f. cross conn. with marking facility | | AD VB 4 GELB | 04.326.2153.8 | 10 | AD VB 4 GELB | 04.326.2153.8 | 10 |
| 9. Cover strip for cross conn. over 10 blocks | | AD VB 6-10 GELB | 04.342.0653.8 | | AD VB 6-10 GELB | 04.342.0653.8 | |
| Cover strip with warning symbol over 4 blocks | | | | | | | |
| 10. Snap-on partition plate | | TS 4 GELB | 07.311.2153.8 | 10 | TS 4 GELB | 07.311.2153.8 | 10 |
| 11. Coding piece | | | | | | | |
| | | | | | | | |
| | | | | | | | |
| | | | | | | | |
| | | | | | | | |
| | | | | | | | |
| | | | | | | | |
| For marking systems see pages 178-179 and 200-202 | | | | | | | |

# selos



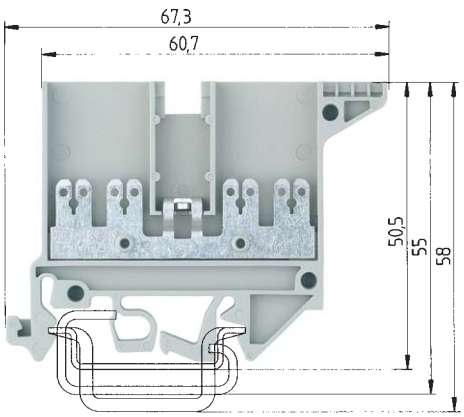


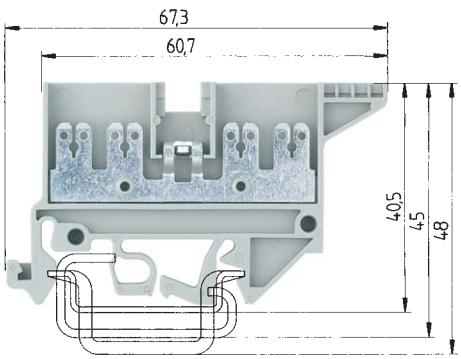


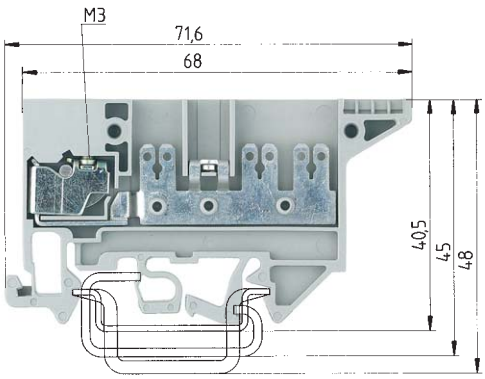


Push-on connectors 2.8 x 0.8 accord. to DIN 46247
Push-on connectors 6.3 x 0.8 accord. to DIN 46247

## WK/4-8 S/IW/U

| | | V | A |
|---|---|---|---|
| fine stranded | solid | | |
| | | 800 V/8 kV/3 | 20 |
| | | 600 V | 10 |
| No. 22-12 AWG | | 300 V | 10 |
| 6 mm | | | |

| Type | Part no. | Std. pack |
|---|---|---|
| WK/4-8 S/IW/U | 57.504.6355.0 | 100 |
| 35 x 27 x 7,5 EN 60715 | 98.300.0000.0 | 1 |
| 35 x 24 x 15 EN 60715 | 98.360.0000.0 | 1 |
| 9006 EN 60715 G-32 | 98.190.0000.0 | 1 |
| WE 2/U | Z5.523.5653.0 | 100 |
| 9708/2 S 35 | Z5.522.8553.0 | 100 |
| 9708 | Z5.522.7053.0 | 100 |
| AP 4 S/IW | 07.311.4355.0 | 50 |
| | 05.592.7553.0 | 2000 |
| | 05.592.7653.0 | 2000 |
| VB WK/...S/IW/U-2 | Z7.281.3227.0 | 10 |
| VB WK/...S/IW/U-3 | Z7.281.3327.0 | 10 |
| VB WK/...S/IW/U-6 | Z7.281.3627.0 | 10 |
| AD VB 4 GELB | 04.326.2153.8 | 10 |
| AD VB 6-10 GELB | 04.342.0653.8 | |
| TS 4 GELB | 07.311.2153.8 | 10 |

Push-on connectors 2.8 x 0.8 accord. to DIN 46247
Push-on connectors 6.3 x 0.8 accord. to DIN 46247

## WK/4-8 S/U

| | | V | A |
|---|---|---|---|
| fine stranded | solid | | |
| | | 800 V/8 kV/3 | 20 |
| No. 22-12 AWG | | 300 V | 10 |
| 6 mm | | | |

| Type | Part no. | Std. pack |
|---|---|---|
| WK/4-8 S/U | 57.504.6255.0 | 100 |
| 35 x 27 x 7,5 EN 60715 | 98.300.0000.0 | 1 |
| 35 x 24 x 15 EN 60715 | 98.360.0000.0 | 1 |
| 9006 EN 60715 G-32 | 98.190.0000.0 | 1 |
| WE 2/U | Z5.523.5653.0 | 100 |
| 9708/2 S 35 | Z5.522.8553.0 | 100 |
| 9708 | Z5.522.7053.0 | 100 |
| AP 4 S | 07.311.4255.0 | 10 |
| | 05.592.7553.0 | 2000 |
| | 05.592.7653.0 | 2000 |
| 9703/6-2 | Z7.211.0227.0 | 50 |
| 9703/6-3 | Z7.211.0327.0 | 50 |
| 9703/6-6 | Z7.211.0627.0 | 50 |
| AD VB 4 GELB | 04.326.2153.8 | 10 |
| AD VB 6-10 GELB | 04.342.0653.8 | |
| TS 4 GELB | 07.311.2153.8 | 10 |

Push-on connectors 2.8 x 0.8 accord. to DIN 46247
Push-on connectors 6.3 x 0.8 accord. to DIN 46247

## WK/3-6 S KO/U

| | | V | A |
|---|---|---|---|
| fine stranded | solid | | |
| 0.5 – 4 mm$^2$ | | 690 V/8 kV/3 | 20 |
| No. 22-12 AWG | | 300 V | 10 |
| No. 22-12 AWG | | 300 V | 10 |
| 6 mm | | | 9 mm |

| Type | Part no. | Std. pack |
|---|---|---|
| WK/3-6 S KO/U | 57.504.7355.0 | |
| 35 x 27 x 7,5 EN 60715 | 98.300.0000.0 | 1 |
| 35 x 24 x 15 EN 60715 | 98.360.0000.0 | 1 |
| 9006 EN 60715 G-32 | 98.190.0000.0 | 1 |
| WE 2/U | Z5.523.5653.0 | 100 |
| 9708/2 S 35 | Z5.522.8553.0 | 100 |
| 9708 | Z5.522.7053.0 | 100 |
| 9701 A/6 1 S KO TP 2 | 07.310.5855.0 | 50 |
| | 05.592.7553.0 | 2000 |
| | 05.592.7653.0 | 2000 |
| 2072/2 | Z7.220.0227.0 | 50 |
| 2072/2 | Z7.220.0227.0 | 50 |
| 2072/6 | Z7.220.0627.0 | 50 |

# Feed-through blocks with solder connection

selos

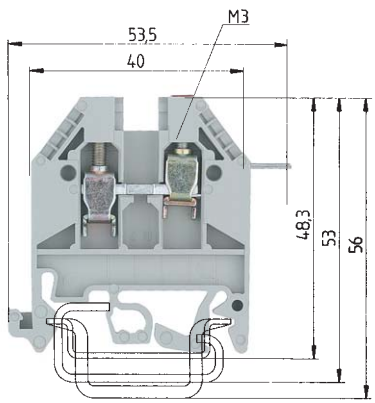


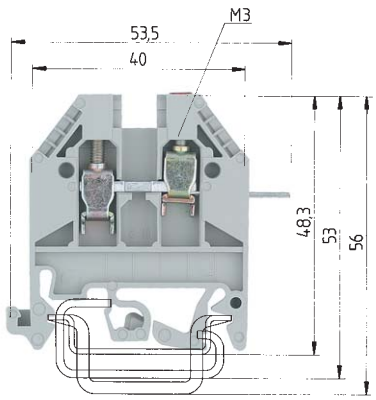


terminals WK 4/UF1 and WK 4/UF2 should be mounted alternately in order to observe the creepages and clearances required for the specific rated voltages.

| | | WK 4/U F1 | | | | WK 4/U F2 | | | |
|---|---|---|---|---|---|---|---|---|---|
| | | fine stranded | solid | V | A | fine stranded | solid | V | A |
| EN 60 947-7-1/DIN VDE 0611 T1 | | 0.5 - 4 mm² | 0.5 - 6 mm² | 400 V/6 kV/3 | 32 | 0.5 - 4 mm² | 0.5 - 6 mm² | 400 V/6 kV/3 | 32 |
| UL-ratings | | No. 22-10 | AWG | 300 V | 30 | No. 22-10 | AWG | 300 V | 30 |
| CSA ratings | | No. 22-10 | AWG | 300 V | 20 | No. 22-10 | AWG | 300 V | 20 |
| Width | Wire strip length | 6 mm | | | 9 mm | 6 mm | | | 9 mm |
| Approvals | | | | | | | | | |

| | | Type | Part no. | Std. pack | Type | Part no. | Std. pack |
|---|---|---|---|---|---|---|---|
| **Feed through terminal** | | WK 4/U F1 | 57.504.1055.0 | 100 | WK 4/U F2 | 57.504.1155.0 | 100 |
| Color: gray | | | | | | | |
| same dimensions as WK4 | | | | | | | |
| | | | | | | | |
| | | | | | | | |
| | | | | | | | |
| | | | | | | | |
| **Accessories** | | 35 x 27 x 7,5 EN 60715 | 98.300.0000.0 | 1 | 35 x 27 x 7,5 EN 60715 | 98.300.0000.0 | 1 |
| 1. Mounting rail TS 35, DIN rail 7.5mm high | L = 2 m | 35 x 24 x 15 EN 60715 | 98.360.0000.0 | 1 | 35 x 24 x 15 EN 60715 | 98.360.0000.0 | 1 |
| Mounting rail TS 35, DIN rail 1.5mm high | L = 2 m | 9006 EN 60715 G-32 | 98.190.0000.0 | 1 | 9006 EN 60715 G-32 | 98.190.0000.0 | 1 |
| Mounting rail TS 32 G rail | L = 2 m | WE 1/U | Z5.523.5753.0 | 100 | WE 1/U | Z5.523.5753.0 | 100 |
| 2. End clamp with U-foot | 10 mm wide | 9708/2 S 35 | Z5.522.8553.0 | 100 | 9708/2 S 35 | Z5.522.8553.0 | 100 |
| End clamp TS 35, with screw | 8 mm wide | 9708 | Z5.522.7053.0 | 100 | 9708 | Z5.522.7053.0 | 100 |
| End clamp TS 32, with screw | 7.5 mm wide | AP 2,5-4 | 07.311.0155.0 | 10 | AP 2,5-4 | 07.311.0155.0 | 10 |
| 3. End plate, 1.5 mm thick | Color: gray | | | | | | |
| | | TW 2,5-4 | 07.311.1155.0 | 10 | TW 2,5-4 | 07.311.1155.0 | 10 |
| 4. Partition, 1.5 mm thick | | | | | | | |
| | | | | | | | |
| | | | | | | | |
| | | | | | | | |
| | | | | | | | |
| | | | | | | | |
| 5. Cross connector with screws, E-Cu | | IVB WK 4-2 | Z7.281.1227.0 | 10 | IVB WK 4-2 | Z7.281.1227.0 | 10 |
| insulated | 2pole | IVB WK 4-3 | Z7.281.1327.0 | 10 | IVB WK 4-3 | Z7.281.1327.0 | 10 |
| | 3pole | IVB WK 4-12 | Z7.281.2227.0 | 10 | IVB WK 4-12 | Z7.281.2227.0 | 10 |
| | to 12pole | | | | | | |
| | | | | | | | |
| 6. Cover for jumper bar with marking capability | | AD VB 4 GELB | 04.326.2153.8 | 10 | AD VB 4 GELB | 04.326.2153.8 | 10 |
| | | | | | | | |
| | | | | | | | |
| 7. Partition plate | | TS 4 GELB | 07.311.2153.8 | 10 | TS 4 GELB | 07.311.2153.8 | 10 |
| | | | | | | | |
| | | | | | | | |
| For marking systems see pages 178-179 and 200-202 | | | | | | | |

# selos

# Micro modular feed through blocks type *WKM*

**selos** MINI

The terminal blocks of series WKM 2,5 F1/15 and WKM 2,5 F2/15 must be mounted alternately in order to maintain the required air and creepage distances for the indicated rated voltage.

*) Ratings to adjacent feed-through block of same series and size

**) For the current carrying capability of the mounting rail see section ***facts*** & DATA

When using switchable connecting links you have to insert a partition which reduces the rated voltage to 400 V/6 kV/3

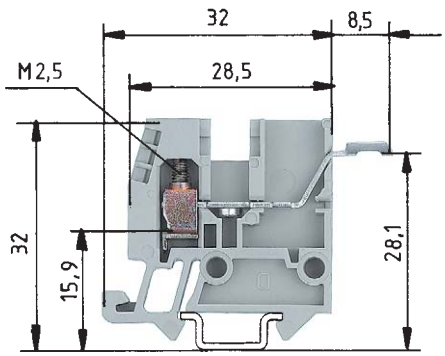


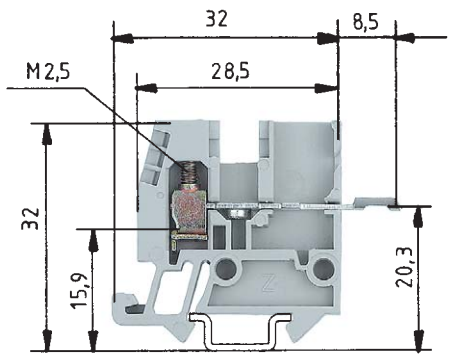


| | WKM 2,5 F1/15 | | | | WKM 2,5 F2/15 | | | |
|---|---|---|---|---|---|---|---|---|
| | fine stranded | solid | V | A | fine stranded | solid | V | A |
| EN 60 947-7-2/DIN VDE 0611 T3 | 0.5 – 2.5 mm² | 0.5 – 4 mm² | 500 V/6 kV/3 | 24 | 0.5 – 2.5 mm² | 0.5 – 4 mm² | 500 V/6 kV/3 | 24 |
| UL-ratings | field/factory wiring | | | | | | | |
| CSA ratings | | | | | | | | |
| Width | Wire strip length | | 5 mm | 9 mm | | | 5 mm | 9 mm |
| Approvals | | | | | | | | |

| | Type | Part no. | Std. pack | Type | Part no. | Std. pack |
|---|---|---|---|---|---|---|
| **Feed-through blocks** with solder connection Color: gray | WKM 2,5 F1/15 | 55.503.1253.0 | 100 | WKM 2,5 F2/15 | 55.503.1353.0 | 100 |
| **Feed-through block** Color: gray | | | | | | |
| **Feed-through block** Color: blue | | | | | | |
| **Ground block** Color: green/yellow | | | | | | |
| | | | | | | |
| **Accessories** | | | | | | |
| 1. Mounting rail 15, DIN rail 5.5 mm high L = 2 m | 9021/15 x 5,5 EN 60715 | 98.090.0015.0 | 10 | 9021/15 x 5,5 EN 60715 | 98.090.0015.0 | 10 |
| 2. End clamp, Polyamide 7.5 mm wide | 9208 S 15 | Z5.522.7553.0 | 100 | 9208 S 15 | Z5.522.7553.0 | 100 |
| 3. End plate 1,5 mm thick Color: gray | APM 2,5 F./15 | 07.311.0653.0 | 10 | APM 2,5 F./15 | 07.311.0653.0 | 10 |
| Color: blue | | | | | | |
| 4. Partition 1.5 mm thick Color: gray | | | | | | |
| Color: blue | | | | | | |
| 5. Cross connector with screws, E-Cu | | | | | | |
| insulated (jumper) 2pole | | | | | | |
| 3pole | | | | | | |
| to 12pole | | | | | | |
| 6. Single cover f. cross conn. with marking facility | AD VB 2,5/15 GELB | 04.326.3053.8 | 10 | AD VB 2,5/15 GELB | 04.326.3053.8 | 10 |
| 7. Partition plate with marking facility | TSM 2,5/15 | 07.311.2853.8 | 10 | TSM 2,5/15 | 07.311.2853.8 | 10 |

For more accessories see pages 160-177
For marking systems see pages 178-179 and 200-202

# selos



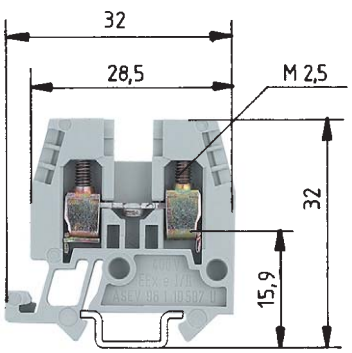


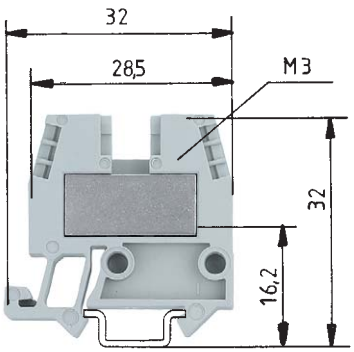


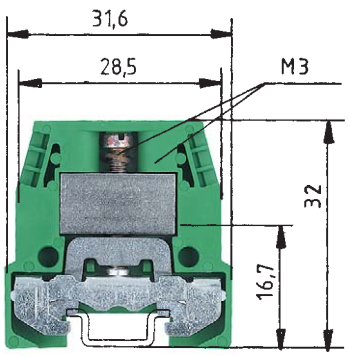


## WKM 2,5/15

| fine stranded | solid | V | A |
|---|---|---|---|
| 0.5 – 2.5 mm² | 0.5 – 4 mm² | 500 V/6 kV/3 | 24 |
| No. 22-14 AWG | | 300 V | 10 |
| No. 22-12 AWG | | 600 V | 25 |
| 5 mm | | | 9 mm |

SEV-EEX LR * ** BKI-EEx

| Type | Part no. | Std. pack |
|---|---|---|
| WKM 2,5/15 | 55.503.1053.0 | 100 |
| WKM 2,5/15 BLAU | 55.503.1053.6 | 100 |
| 9021/15 x 5,5 EN 60715 | 98.090.0015.0 | 10 |
| 9208 S 15 | Z5.522.7553.0 | 100 |
| APM 2,5 - 4/15 | 07.311.0853.0 | 10 |
| APM 2,5 - 4/15 BLAU | 07.311.0853.6 | 10 |
| TWM 2,5 - 4/15 | 07.311.1853.0 | 10 |
| TWM 2,5 - 4/15 BLAU | 07.311.1853.6 | 10 |
| AD VB 2,5/15 GELB | 04.326.3053.8 | 10 |
| TSM 2,5/15 | 07.311.2853.8 | 10 |

*CL I, ZN1, AExe II / **CL I, ZN1, Exe II pending

## WKM 4/15

| fine stranded | solid | V | A |
|---|---|---|---|
| 0.5 – 4 mm² | 0.5 – 6 mm² | 500 V/6 kV/3 | 32 |
| No. 22-10 AWG | | 600 V | 30 |
| No. 20-10 AWG | | 600 V | 37 |
| 6 mm | | | 9 mm |

LR * **

| Type | Part no. | Std. pack |
|---|---|---|
| WKM 4/15 | 55.504.1053.0 | 100 |
| WKM 4/15 BLAU | 55.504.1053.6 | 100 |
| 9021/15 x 5,5 EN 60715 | 98.090.0015.0 | 10 |
| 9208 S 15 | Z5.522.7553.0 | 100 |
| APM 2,5 - 4/15 | 07.311.0853.0 | 10 |
| APM 2,5 - 4/15 BLAU | 07.311.0853.6 | 10 |
| TWM 2,5 - 4/15 | 07.311.1853.0 | 10 |
| TWM 2,5 - 4/15 BLAU | 07.311.1853.6 | 10 |
| IVB WK 4 E/U-2 | Z7.271.2227.0 | 10 |
| IVB WK 4 E/U-3 | Z7.271.2327.0 | 10 |
| IVB WK 4 E/U-12 | Z7.271.3227.0 | 10 |
| AD VB 4/15 GELB | 04.326.2953.8 | 10 |
| TSM 4/15 | 07.311.2953.8 | 10 |

*CL I, ZN1, AExe II / **CL I, ZN1, Exe II pending

## WKM 4 SL/15

| fine stranded | solid | V | A |
|---|---|---|---|
| 0.5 – 4 mm² | 0.5 – 6 mm² | 500 V/6 kV/3*) | |
| No. 22-14 AWG | | 300 V*) | 10 |
| No. 22-10 AWG | | | |
| 6 mm | | | 9 mm |

SEV-EEX LR * ** BKI-EEx

| Type | Part no. | Std. pack |
|---|---|---|
| WKM 4 SL/15 | 55.504.9153.0 | 100 |
| 9021/15 x 5,5 EN 60715**) | 98.090.0015.0 | 10 |
| 9208 S 15 | Z5.522.7553.0 | 100 |
| APM 4 SL/15 | 07.311.0753.0 | 10 |

*CL I, ZN1, AExe II / **CL I, ZN1, Exe II pending

# Current transformer disconnect terminals

# selos

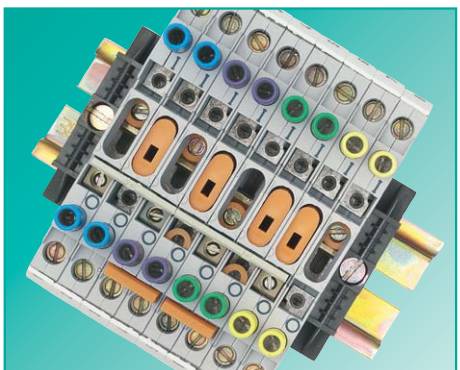

**Current transformer circuits must always have a closed secondary circuit. This rule applies even when changing measuring instruments or electric meters and when carrying out reference measurements with external measuring instruments.**

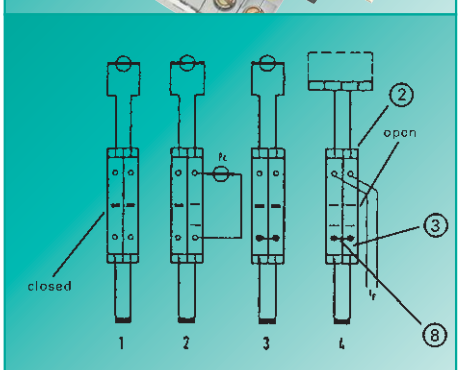


❒ The WKT-Terminal Block Series meets all circuit applications with the addition of a few accessories.

→ This modular concept reduces inventory and component costs.

❒ All components including the terminal block and accessories are insulated.

→ Test points are touch safe to the standard VGB4

→ Sliding link and jumper bars are touch safe.

❒ **Compact design:**

→ Easy to operate Sliding-Link

→ Jumper Bars

→ Siding Shorting Bars

→ Test plug socket

→ The insulated housing on the Sliding-Link provides a guide for the screwdriver blade. This prevents the blade from accidentally slipping off the screw head. The insulated housing also provides visual indication of the circuit status (open or closed).

→ Accessories are easily installed with a screwdriver, even the test plugs.

❒ Safe operation of the sliding shorting bar: The sliding shorting bar is touch safe.

→ The sliding shorting bar is designed such that the test plug socket remains available for testing.

# selos

Insulated Jumpering System

Distribution of the K - potential is possible due to the open slots for both the sliding shorting bar and the stationary jumper bar. Commoning every other terminal is possible by removing every other pole from the stationary jumper bar (see drawing on page 149).

Insulated **Test sockets**

The test sockets accept Wieland standard plugs or commercially available safety plugs with a diameter of 4mm.

This allows current tests without shut-down.

The sliding disconnect locking device prevents tampering of the disconnect screw. The locking device can lock the screw in open or closed position. This device is easily installed into the top of the terminal block. Removing the locking device requires a standard screwdriver.

Marking capability with the standard Wieland marking system.

- ❒ Single marking tags in the same pitch as the terminal block
- ❒ Snap-on marking strips (10 individual marking tags per strip) for rapid marking
- ❒ Tear-off marking strips for marking up to 3-digits per terminal block

**DQS certificates for all product families**

- ❒ Quality standard as per DIN ISO 9001
- ❒ in Development, Production, Assembly
- ❒ Continued control of the quality standard by means of regular internal and external quality audits
- ❒ Compatible with certificates of other countries:
  - – BSI Certificate, Great Britain
  - – SQS Certificate, Switzerland
  - – Aib-Vincotte Certificate, Belgium
  - – ÖQS Certificate, Austria

**Material**

- ❒ Special alloys and surface treatments
- ❒ Low contact resistance
- ❒ High corrosion Resistance

❒ Metal parts

Clamping body/clamping screws: steel, zinc-plated and dichromated

Current carrying bar: Tin plated copper alloy

❒ Insulation material

Polyamide 66/6 for its excellent electrical, chemical and mechanical characteristics
(see section ***facts*** & DATA)
Material accord. to US standard UL 94-V0

You can use our **wieplan** software to configure your own terminal block assemblies
(see page 10/11).

**Note:**

The information regarding cross sectional area and connection types pertains to unprepared wires without ferrules.

The voltage ratings apply to the terminals in their intended application. When different products are mounted adjacent to each other, the proper isolation distances must be adhered to. For this purpose, **Wieland** offers a large selection of appropriate accessories.

A detailed description of technical data, the standards' requirements, and the application conditions can be found in part ***facts*** & DATA.

# Current transformer disconnect terminal block

selos

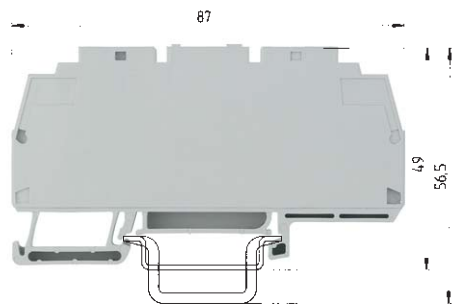


available from 02/02

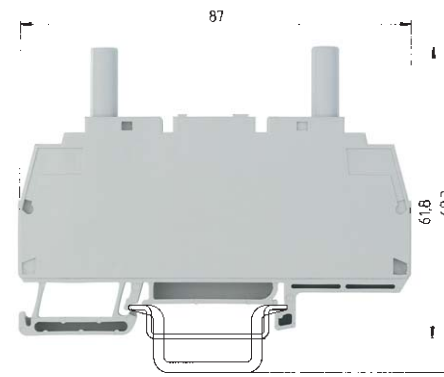


available from 02/02

| | | WK6 TK/35 | | | WK6 TK P3/35 | | |
|---|---|---|---|---|---|---|---|
| | | fine stranded | solid | V | fine stranded | solid | V |
| EN 60 947-7-1/DIN VDE 0611 T1 | | 0.5 – 6 mm² | 0.5 – 10 mm² | 400 V/6 kV/3 | 0.5 – 6 mm² | 0.5 – 10 mm² | 400 V/6 kV/3 |
| UL-ratings | field/factory wiring | No. 20-8 AWG | | 600 V | No. 20-8 AWG | | 600 V |
| CSA ratings | | No. 20-8 AWG | | 300 V | No. 20-8 AWG | | 300 V |
| Width | Wire strip length | 8 mm | | | 8 mm | | |
| Approvals | | pending | | | pending | | |

| | | Type | Part no. | Std. pack | Type | Part no. | Std. pack |
|---|---|---|---|---|---|---|---|
| **Current transformer disconnect terminal** | | WK6 TK/35 | 56.106.0553.0 | | WK6 TK P3/35 | 56.106.0653.0 | |
| | | | | | | | |
| | | | | | | | |
| **Accessories** | | | | | | | |
| 1. Mounting rail TS 35, DIN rail 7.5mm high | L = 2 m | 35 x 27 x 7,5 EN 60715 | 98.300.0000.0 | 1 | 35 x 27 x 7,5 EN 60715 | 98.300.0000.0 | 1 |
| Mounting rail TS 35, DIN rail, 15mm high | L = 2 m | 35 x 24 x 15 EN 60715 | 98.360.0000.0 | 1 | 35 x 24 x 15 EN 60715 | 98.360.0000.0 | 1 |
| Mounting rail TS 32, G rail | L = 2 m | | | | | | |
| 2. End clamp with U-foot | 10 mm wide | WE 1/U | Z5.523.5753.0 | 100 | WE 1/U | Z5.523.5753.0 | 100 |
| End clamp TS 35 with screw | 8 mm wide | 9708/2 S 35 | Z5.522.8553.0 | 100 | 9708/2 S 35 | Z5.522.8553.0 | 100 |
| End clamp TS32 with screw | 7.5 mm wide | | | | | | |
| 3. Disconnect locking device | | SP WK6 TK | 05.563.5453.0 | | SP WK6 TK | 05.563.5453.0 | |
| 4. Sliding short-circuit slide | | | | | | | |
| insulated | 2pole | IVS WK6 TK-2 | Z7.212.2227.0 | | IVS WK6 TK-2 | Z7.212.2227.0 | |
| | 3pole | IVS WK6 TK-3 | Z7.212.2327.0 | | IVS WK6 TK-3 | Z7.212.2327.0 | |
| | 4pole | IVS WK6 TK-4 | Z7.212.2427.0 | | IVS WK6 TK-4 | Z7.212.2427.0 | |
| 5. Jumper bar with screws, E-Cu | | | | | | | |
| insulated | 2pole | IVB WK6 TK-2 | Z7.212.1227.0 | | IVB WK6 TK-2 | Z7.212.1227.0 | |
| | 3pole | IVB WK6 TK-3 | Z7.212.1327.0 | | IVB WK6 TK-3 | Z7.212.1327.0 | |
| | 4pole | IVB WK6 TK-4 | Z7.212.1427.0 | | IVB WK6 TK-4 | Z7.212.1427.0 | |
| | 5pole | IVB WK6 TK-5 | Z7.212.1527.0 | | IVB WK6 TK-5 | Z7.212.1527.0 | |
| | 10pole | IVB WK6 TK-10 | Z7.212.2027.0 | | IVB WK6 TK-10 | Z7.212.2027.0 | |
| 6. Test socket | Color: gray | SB 4 GRAU | 05.511.2953.0 | | SB 4 GRAU | 05.511.2953.0 | |
| | Color: violet | SB 4 VIOLETT | 05.511.2953.9 | | SB 4 VIOLETT | 05.511.2953.9 | |
| | Color: green | SB 4 GRÜN | 05.511.2953.7 | | SB 4 GRÜN | 05.511.2953.7 | |
| | Color: yellow | SB 4 GELB | 05.511.2953.8 | | SB 4 GELB | 05.511.2953.8 | |
| For more accessories see pages 160-177 | | | | | | | |
| For marking systems see pages 178-179 and 200-202 | | | | | | | |

# selos

Application example:

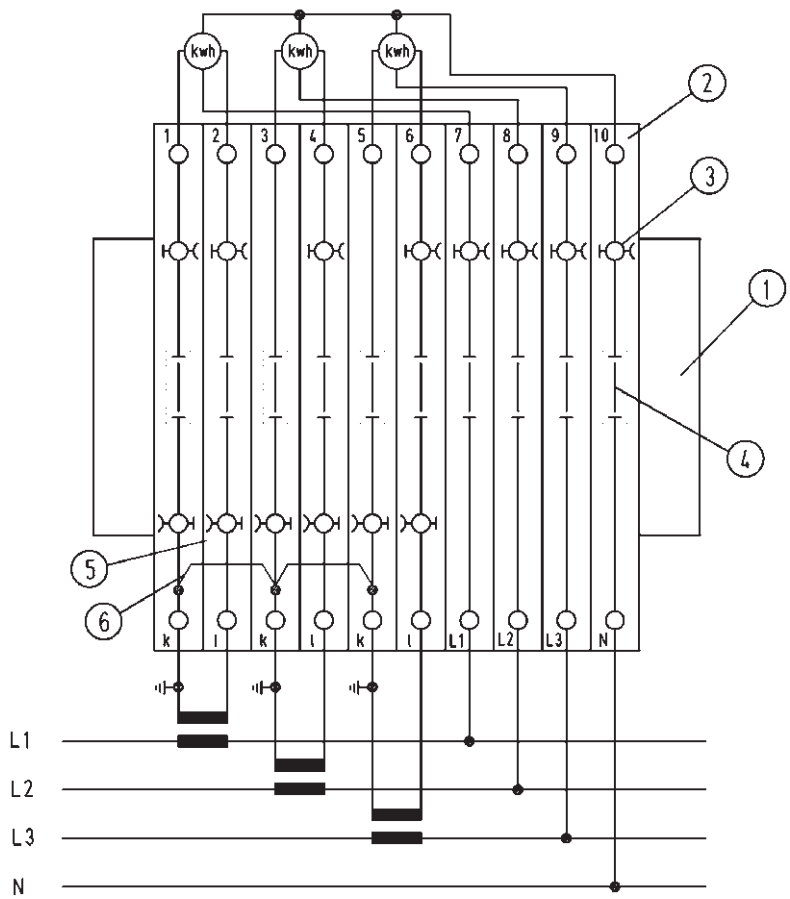


| Pos. | Type | Part no. | Std. pack |
|---|---|---|---|
| 1. | WE 1/4 | Z5.523.5753.0 | 100 |
| 2. | WK6 TK/35 | 56.106.0053.0 | |
| 3. | SB 4 GRAU | Z5.523.5753.0 | 100 |
| 4. | SB WK6 TK | 05.563.5453.0 | |
| 5. | IVS WK6 TK-2 | Z7.212.2227.0 | |
| | for a common K-potential | | |
| 6. | IVB WK6 TK-5 | Z7.212.1527.0 | |

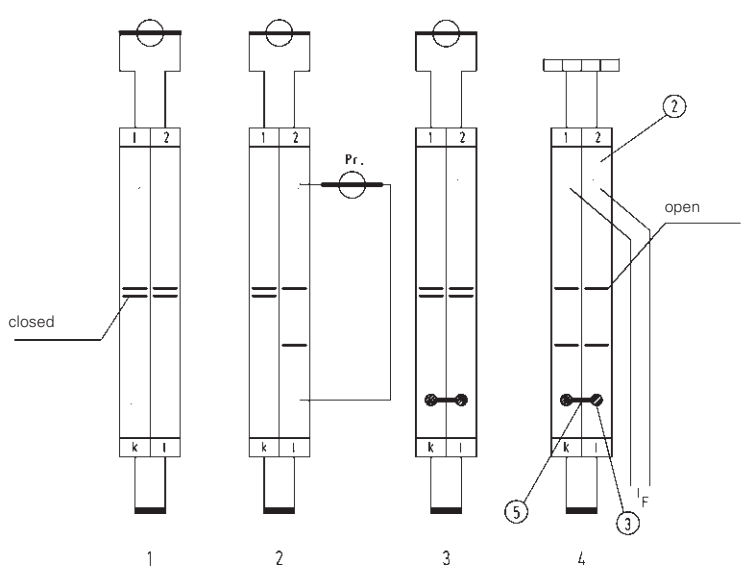


Simple current transformer circuits

1 = normal operation
2 = measured value testing
3 = transformer short circuit
4 = relay testing

# selos POWER LINE

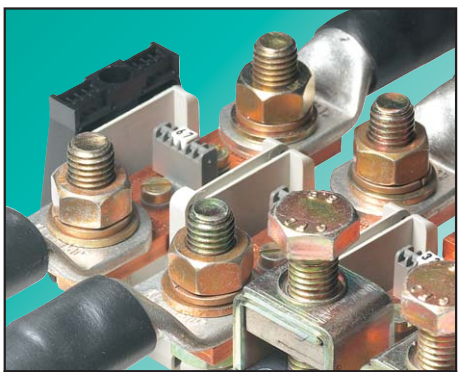

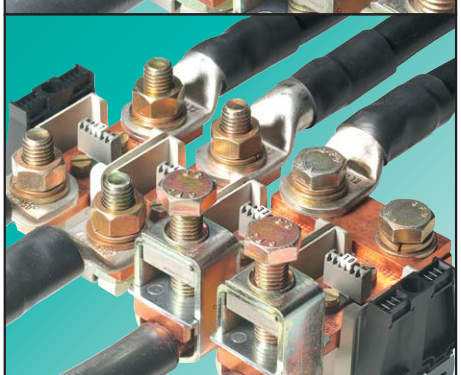

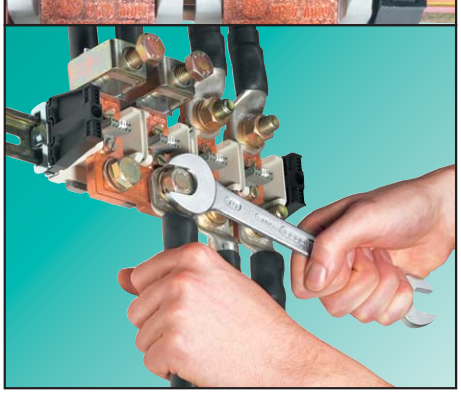

**RFK offers ...**

❒ **Rising Cage Connection Technology**

**Application advantages**

→ A stripped wire can be connected without ferules/unprepared

→ Secure connection due to the elastic design of the clamping body

❒ **Rising Cage and Ring Terminal Connection**

❒ **Ring Terminal** connections in two styles:
– Screw (bolt) with nut
– Screw (bolt) with threaded current bar

→ Connection requires ring lug terminal

→ Secure connection with use of lock washers

❒ **Rated cross section:** 95 – 240 $mm^2$

❒ **Connection Range:** 2/0 AWG - 500 MCM

❒ **Material:**
– Insulating housing, partition, cover: Polyamide 66/6
– Current carrying bar and jumper rail: E-Cu
– Screws, nuts, washers, clamping bodies: galvanically zinc-plated steel

→ Due to its excellent electrical, chemical and mechanical properties

→ Low contact resistance

❒ **Touch Safe Covers**

→ Touch safe covers can be installed after connections have been made and do not increase the pitch of the assembly.

→ Partition plates provide both visual and electrical separation of adjacent terminals. They do not increase the pitch of the assembly and can be marked with the Wieland standard marking system.

❒ **Partition Plates** with marking capability

❒ **Jumper bar:**
Available in 2, 3, or 4 pole versions.

→ Jumper bars are used to common the potential of RFK terminals with ring connection.

**Installation instructions:**
When tightening the terminal screw, it is recommended that you hold it against the conductor in order to prevent deformation of the mounting rail and to keep the foot of the terminal free from torsional forces.

The threaded hole in the foot of the terminal type RFK 1/...PA enables the terminals to be screwed to the mounting rail. Perforated rails are available for the purpose and the mounting rail is pre-drill accordingly on site or at the factory.

**Caution:** Make sure that the recommended stripped length for the conductor of 27 mm is observed!

# selos



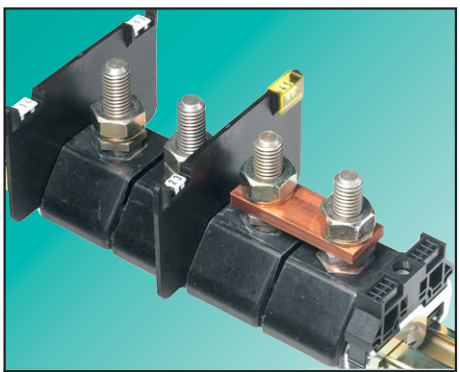

**BK offers ...**

- ❒ **Stud bolt connection**
- ❒ **Torque values to stud bolt diameter standard up to 10 Nm**

  **Connection range per stud bolt diameter standard DIN 46 234 from 2.5 to 240 mm**

**Application advantages**

→ No loose wires

→ High contact force ensures a secure connection with the use of a lock washer

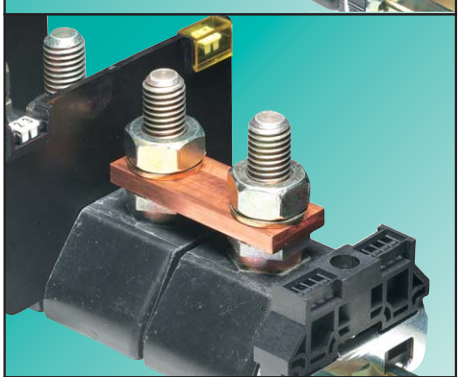

❒ **Material:**
- – Insulated housing: epoxy resin
- – Stud Bolt, nut and lock washer: galvanized steel, zinc plated
- – Jumper Bar: E-Cu
- – Locking slide, marking tag, and marking tag holder: Polyamide

→ Constant operating temperature; 150 °C

→ Nuts, washer, lock washer are included but are packaged separately

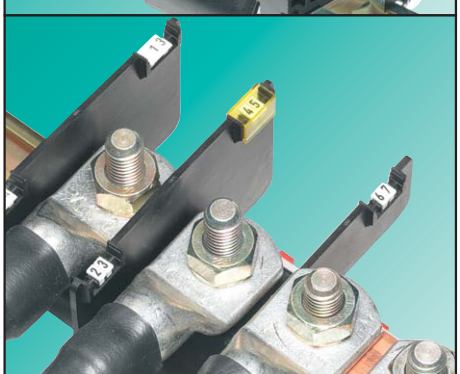

❒ **End plates / partition plate** with marking capability

→ End plates/partition plates provide both visual and electrical separation of adjacent terminals. They do not increase the pitch of the assembly and can be marked with the Wieland standard marking system.

❒ **Marking tag cover**

→ The marking tag cover is a translucent yellow material which protects the marking tag against dust and other industrial elements.

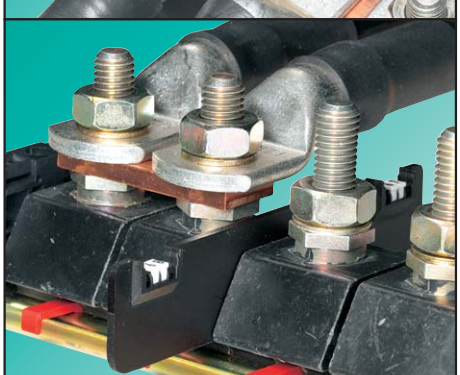

❒ **Jumper bar:**
Available in 2, 3, 4 pole versions

❒ **Locking slides**
allows the BK series to be locked onto the DIN rail

→ With the BK terminal series fot ting connection, it is possible to common the potential of adjacent terminals with a jumper bar.

→ The locking slide ensures secure mounting of the BK terminal on the DIN rail. This is important due to larger conductor sizes and higher torque values of the BK series.

**DQS certificates for all company divisions**

- ❒ Quality standard as per DIN ISO 9001
- ❒ in Development, Production, Assembly
- ❒ Continued control of the quality standard by means of regular internal and external quality audits
- ❒ Compatible with certificates of other countries:
- – BSI Certificate, Great Britain
- – SQS Certificate, Switzerland
- – Aib-Vincotte Certificate, Belgium
- – ÖQS Certificate, Austria

You can use our **wieplan** software to configure your own terminal block assemblies (see page 10/11).

A detailed description of technical data, the standards' requirements, and the application conditions can be found in part ***facts*** & DATA.

# Stud bolt terminal for 32 mm DIN rail

## selos POWER LINE

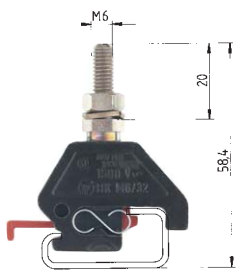


The wire size is dependent on the hole diameter of the ring terminal of 6.5 mm and the max. ring terminal width of 15 mm

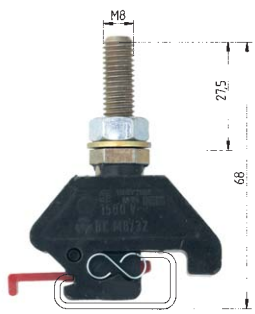


The wire size is dependent on the hole diameter of the ring terminal of 6.5 mm and the max. ring terminal width of 15 mm

| | | BK M 6/32 | | | | BK M 8/32 | | | |
|---|---|---|---|---|---|---|---|---|---|
| DIN VDE 0110 | | | | V | A | | | V | A |
| UL-ratings | field/factory wiring | 1500 V~ | 1800 V ⎓ | Gr. C | | 1500 V~ | 1800 V ⎓ | Gr. C | |
| CSA ratings | | 2 AWG | | 600 V | 115 | 3/0 AWG | | 1000 V | 200 |
| Width | Wire strip length | 18 mm | | | | 26 mm | | | |
| Approvals | | SEV, CSA, CE | | | | SEV, CSA, CE | | | |

| | Type | Part no. | Std. pack | Type | Part no. | Std. pack |
|---|---|---|---|---|---|---|
| **Stud bolt terminal** | BK M 6/32 | 32.630.0042.0 | 50 | BK M 8/32 | 32.640.0042.0 | 50 |
| | | | | | | |
| | | | | | | |
| **Accessories** | | | | | | |
| 1. Mounting rail TS 35, DIN rail, 7.5 mm high L = 2 m | | | | | | |
| Mounting rail TS 35, DIN rail 15 mm high L = 2 m | | | | | | |
| Mounting rail TS 35, G rail L = 2 m | 9006 EN 60715 G-32 | 98.190.0000.0 | 1 | 9006 EN 60715 G-32 | 98.190.0000.0 | 1 |
| 2. End clamp with U-foot 10 mm wide | WE 1/U | Z5.523.5753.0 | 100 | WE 1/U | Z5.523.5753.0 | 100 |
| End clamp TS32 with screw 8 mm wide | | | | | | |
| End clamp TS32 with screw 7.5 mm wide | 9708 | Z5.522.7053.0 | 100 | 9708 | Z5.522.7053.0 | 100 |
| 3. End plate with marking capability | | 07.340.4153.0 | 50 | | 07.340.4153.0 | 50 |
| | | | | or | 07.340.4353.0 *) | 50 |
| 4. Partition with marking capability | | 07.340.1153.0 | 50 | | 07.340.1153.0 | 50 |
| | | | | or | 07.340.1353.0 *) | 50 |
| 5. Jumper bar from E-Cu | | | | | | |
| for 2 blocks | | | | | | |
| for 3 blocks | | | | | | |
| for 4 blocks | | | | | | |
| 6. Marking tag cover (see page 151) Color: yellow | | 04.326.0056.0 | 100 | | 04.326.0056.0 | 100 |
| 7. Marking plate | | 07.340.2153.0 | 50 | | 07.340.2153.0 | 50 |
| | | | | or | 07.340.2353.0 *) | 50 |

*) When selecting the partition you have to consider the air and creepage distances.

For marking systems see pages 178-179 and 200-202

# selos



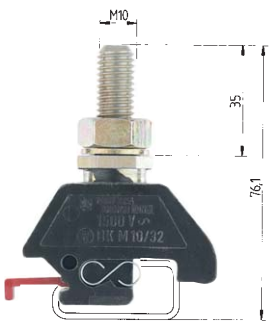


The cross sectional area is determined by the bore hole diameter of the ring terminal of 10.5 mm and the max. ring terminal width of 30 mm

## BK M 10/32

| | | V | A |
|---|---|---|---|
| 1500 V~ | 1800 V ⎓ | Gr. C | |
| 300 MCM | | 1000 V | 285 |
| 32 mm | | | |

| Type | Part no. | Std. pack |
|---|---|---|
| BK M 10/32 | 32.650.0042.0 | 50 |
| | | |
| | | |
| | | |
| | | |
| | | |
| 9006 EN 60715 G-32 | 98.190.0000.0 | 1 |
| WE 1/U | Z5.523.5753.0 | 100 |
| | | |
| 9708 | Z5.522.7053.0 | 100 |
| | 07.340.4353.0 | 50 |
| | | |
| | 07.340.1353.0 | 50 |
| | | |
| | | |
| VB RFK 1/95/2/32 | 07.205.1227.0 | 20 |
| VB RFK 1/95/3/32 | 07.205.1327.0 | 10 |
| VB RFK 1/95/4/32 | 07.205.1427.0 | 10 |
| | 04.326.0056.0 | 100 |
| | 07.340.2353.0 | 50 |
| | | |
| | | |
| | | |
| | | |
| | | |
| | | |
| | | |

| Part no. | B | $H_1$ | $H_2$ |
|---|---|---|---|
| 07.340.2153.0 | 80 | 22 | |
| 07.340.2353.0 | 115 | 25 | |
| 07.340.4153.0 | 80 | | 50 |
| 07.340.4353.0 | 115 | | 62 |
| 07.340.1153.0 | 80 | | 50 |
| 07.340.1353.0 | 115 | | 62 |

Standard to DIN 46 234

| Stud Bolt Diameter | Wire gauge $mm^2$ | AWG/MCM | Hole diameter of the ring terminal | Width of ring terminal |
|---|---|---|---|---|
| 6 | 2.5 | 14 | 6.5 | 11 |
| 6 | 6 | 10 | 6.5 | 11 |
| 6 | 10 | 8 | 6.5 | 11 |
| 6 | 16 | 6 | 6.5 | 11 |
| 6 | 25 | 4 | 6.5 | 12 |
| 6 | 35 | 2 | 6.5 | 15 |
| 8 | 2,5 | 14 | 8.4 | 14 |
| 8 | 6 | 10 | 8.4 | 14 |
| 8 | 10 | 8 | 8.4 | 14 |
| 8 | 16 | 6 | 8.4 | 14 |
| 8 | 25 | 4 | 8.4 | 16 |
| 8 | 35 | 2 | 8.4 | 16 |
| 8 | 50 | 0 | 8.4 | 18 |
| 8 | 70 | 2/0 | 8.4 | 22 |
| 8 | 95 | 3/0 | 8.4 | 24 |
| 8 | 120 | 250 | 8.4 | 24 |
| 10 | 6 | 10 | 10.5 | 18 |
| 10 | 10 | 8 | 10.5 | |
| 10 | 16 | 6 | 10.5 | 18 |
| 10 | 25 | 4 | 10.5 | 18 |
| 10 | 35 | 2 | 10.5 | 18 |
| 10 | 50 | 0 | 10.5 | 18 |
| 10 | 70 | 2/0 | 10.5 | 22 |
| 10 | 95 | 3/0 | 10.5 | 24 |
| 10 | 120 | 250 | 10.5 | 24 |
| 10 | 150 | 300 | 10.5 | 30 |

# Stud bolt terminal for TS 35 mm DIN rail

## selos POWER LINE

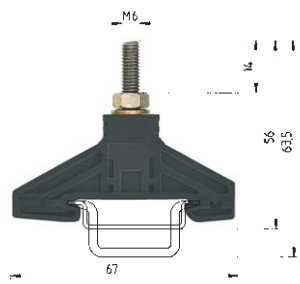


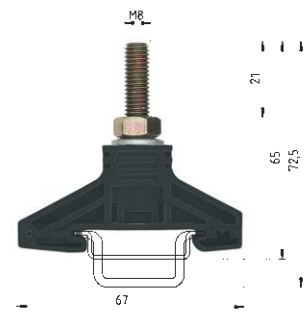


| | | BK M 6/35 | BK M 8/35 |
|---|---|---|---|
| | | V A | V A |
| DIN VDE 0110 | | 250 V/4 kV/6[1)] | 250 V/4 kV/6[1)] |
| UL-ratings | field/factory wiring | | |
| CSA ratings | | | |
| Width | | 19.6 mm | 24.6 mm |
| Approvals | | | |

| | | Type | Part no. | Std. pack | Type | Part no. | Std. pack |
|---|---|---|---|---|---|---|---|
| **Stud bolt terminal** | | BK M 6/35 | 32.530.0053.0 | | BK M 8/35 | 32.540.0053.0 | |
| | | | | | | | |
| | | | | | | | |
| **Accessories** | | | | | | | |
| 1. Mounting rail TS 35, DIN rail, 7.5 mm high | L = 2 m | 35 x 27 x 7,5 EN 60715 | 98.300.0000.0 | 1 | 35 x 27 x 7,5 EN 60715 | 98.300.0000.0 | 1 |
| Mounting rail TS 35, DIN rail 15 mm high | L = 2 m | 35 x 24 x 15 EN 60715 | 98.360.0000.0 | 1 | 35 x 24 x 15 EN 60715 | 98.360.0000.0 | 1 |
| Mounting rail TS 35, G rail | L = 2 m | | | | | | |
| 2. End clamp with U-foot | 10 mm wide | WE 1/U | Z5.523.5753.0 | 100 | WE 1/U | Z5.523.5753.0 | 100 |
| End clamp TS35 with screw | 8 mm wide | 9708/2 S 35 | Z5.522.8553.0 | 100 | 9708/2 S 35 | Z5.522.8553.0 | 100 |
| End clamp TS32 with screw | 7.5 mm wide | | | | | | |
| 3. Partition plate | | TW BK M 6/35 | 07.340.3553.0 | | TW BK M 8/35 | 07.340.3653.0 | |
| 4. Jumper bar: | from E-Cu | | | | | | |
| | for 2 pole | VB BK M 6/35-2 | 07.205.5227.0 | | VB BK M 8/35-2 | 07.205.7227.0 | |
| | for 3 pole | VB BK M 6/35-3 | 07.205.5327.0 | | VB BK M 8/35-3 | 07.205.7327.0 | |
| 6. Marking tag | | | | | | | |
| For marking systems see pages 178-179 and 200-202 | | available for delivery from 04/2002 | | | available for delivery from 04/2002 | | |

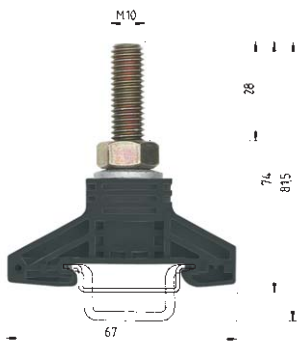


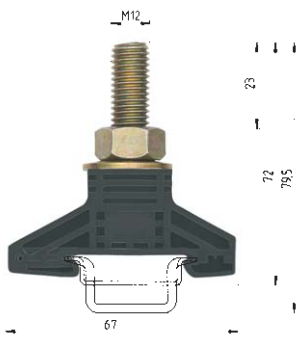


## BK M 10/35

V A
250 V/4 kV/6[1)]

35.6 mm

## BK M 12/35

V A
250 V/4 kV/6[1)]

[1)] Without partition plate
800V / 8K V/3 with partion plate TWBK

35.6 mm

| Type | Part no. | Std. pack | Type | Part no. | Std. pack |
|---|---|---|---|---|---|
| BK M 10/35 | 32.550.0053.0 | | BK M 12/35 | 32.560.0053.0 | |
| | | | | | |
| | | | | | |
| | | | | | |
| 35 x 27 x 7,5 EN 60715 | 98.300.0000.0 | 1 | 35 x 27 x 7,5 EN 60715 | 98.300.0000.0 | 1 |
| 35 x 24 x 15 EN 60715 | 98.360.0000.0 | 1 | 35 x 24 x 15 EN 60715 | 98.360.0000.0 | 1 |
| | | | | | |
| WE 1/U | Z5.523.5753.0 | 100 | WE 1/U | Z5.523.5753.0 | 100 |
| 9708/2 S 35 | Z5.522.8553.0 | 100 | 9708/2 S 35 | Z5.522.8553.0 | 100 |
| | | | | | |
| TW BK M 10-12/35 | 07.340.3753.0 | | TW BK M 10-12/35 | 07.340.3753.0 | |
| | | | | | |
| VB BK M 10/35-2 | 07.205.8227.0 | | VB BK M 10/35-2 | 07.205.9227.0 | |
| VB BK M 10/35-3 | 07.205.8327.0 | | VB BK M 10/35-3 | 07.205.9327.0 | |
| available for delivery from 04/2002 | | | available for delivery from 04/2002 | | |

# Terminal blocks for up to 240 mm² (500 MCM)

## selos POWER LINE

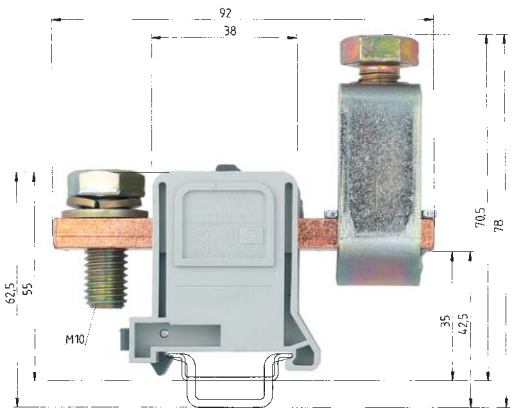


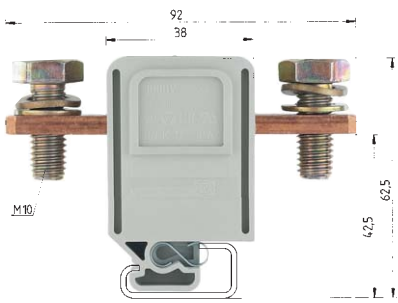


| | | RFK 1/95... S35 | | | RFK 1/95... PA | | |
|---|---|---|---|---|---|---|---|
| | | fine stranded | V | A | fine stranded | V | A |
| DIN VDE 0611 Teil 1/EN 60947-7-1 | | 16-95 mm² | 1000 V | 250 | 16-95 mm² | 1000 V | 250 |
| UL-ratings | field/factory wiring | 6-3/0 AWG | 600 V | 200 | 6-3/0 AWG | 600 V | 200 |
| CSA ratings | | 6-3/0 AWG | 600 V | 200 | 6-3/0 AWG | 600 V | 200 |
| Width | Wire strip length | 32 mm | | 27 mm | 32 mm | | 27 mm |
| Approvals | | GL SEV N NV KEMA LR UL CSA B CE | | | GL SEV N NV KEMA LR UL CSA B CE | | |

| | | | Type | Part no. | Std. pack | Type | Part no. | Std. pack |
|---|---|---|---|---|---|---|---|---|
| **Configurations** | Color: gray | **F** | RFK 1/95 F S 35 | 56.395.0055.0 | 10 | RFK 1/95 F PA | 59.195.0055.0 | 10 |
| | Color: gray | **K** | RFK 1/95 K S 35 | 56.395.0155.0 | 10 | RFK 1/95 K PA | 59.195.0155.0 | 10 |
| | Color: gray | **FK** | RFK 1/95 FK S 35 | 56.395.0255.0 | 10 | RFK 1/95 FK PA | 59.195.0255.0 | 10 |
| | Color: gray | **FM** | RFK 1/95 FM S 35 | 56.395.1055.0 | 10 | RFK 1/95 FM PA | 59.195.1055.0 | 10 |
| | Color: gray | **FMK** | RFK 1/95 FMK S 35 | 56.395.1255.0 | 10 | RFK 1/95 FMK PA | 59.195.1255.0 | 10 |
| **Accessories** | | | | | | | | |
| 1. Mounting rail TS 35, DIN rail, 7.5 mm high | | L = 2 m | 35 x 27 x 7,5 EN 60715 | 98.300.0000.0 | 1 | | | |
| Mounting rail TS 35, DIN rail 15 mm high | | L = 2 m | 35 x 24 x 15 EN 60715 | 98.360.0000.0 | 1 | | | |
| Mounting rail TS 35, G rail | | L = 2 m | | | | 9006 EN 60715 G-32 | 98.190.0000.0 | 1 |
| 2. End clamp with U-foot | | 10 mm wide | WE 2/U | Z5.523.5653.0 | 100 | WE 2/U | Z5.523.5653.0 | 100 |
| End clamp TS35 with screw | | 8 mm wide | 9708/2 S35 | Z5.522.8553.0 | 100 | 9708/2 S35 | Z5.522.8553.0 | 100 |
| End clamp TS32 with screw | | 7.5 mm wide | 9708 | Z5.522.7053.0 | 100 | 9708 | Z5.522.7053.0 | 100 |
| 3. Cover for RFK 1/... | | Color: yellow | | Z7.409.5753.0 | 10 | | Z7.409.5753.0 | 10 |
| 4. Partition/end plate PA 66/6 | | 2.8 mm thick | TE/RFK 1/95 | 07.340.0353.0 | 50 | TE/RFK 1/95 | 07.340.0353.0 | 50 |
| 5. Screws for fixation on the mounting rail | | | | | | AM 5 x 12 DIN 933 | 06.065.0021.0 | 100 |
| 6. Jumper bar for tab connection blocks | | from E-Cu | | | | | | |
| | | for 2 blocks | VB RFK 1/95/2/32 | 07.205.1227.0 | 20 | VB RFK 1/95/2/32 | 07.205.1227.0 | 20 |
| | | for 3 blocks | VB RFK 1/95/3/32 | 07.205.1327.0 | 10 | VB RFK 1/95/3/32 | 07.205.1327.0 | 10 |
| | | for 4 blocks | VB RFK 1/95/4/32 | 07.205.1427.0 | 10 | VB RFK 1/95/4/32 | 07.205.1427.0 | 10 |

For marking systems see pages 178-179 and 200-202

# selos



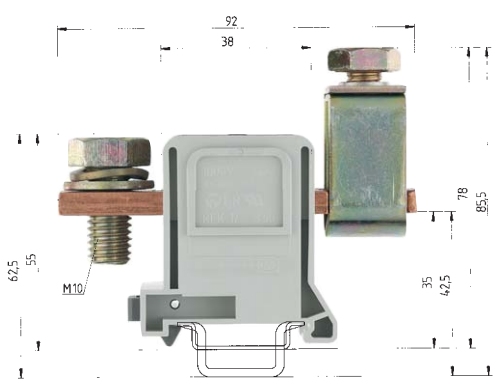


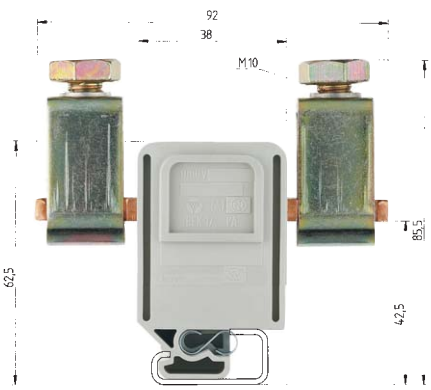


## RFK 1/150... S35

| fine stranded | V | A |
|---|---|---|
| 70-240 mm² 70-240 mm² | 1000 V | 335 |
| 0 AWG - 300 MCM | 600 V | 275 |
| 0 AWG - 300 MCM | 600 V | 300 |
| 42 mm | | 27 mm |

## RFK 1/150... PA

| fine stranded | V | A |
|---|---|---|
| 70-240 mm² 70-240 mm² | 1000 V | 335 |
| 0 AWG - 300 MCM | 600 V | 275 |
| 0 AWG - 300 MCM | 600 V | 300 |
| 42 mm | | 27 mm |

| mm² | Type | a x b | M I | M II | H | L | F | E |
|---|---|---|---|---|---|---|---|---|
| 95 | F, K, FK, FM, FMK | 5 x 18 | M 10 | M 8 | 78 | 180 | 92 | 46 |
| 150 | K, FK, FMK | 6 x 26 | M 12 | M 10 | 85.5 | 200 | 92 | 46 |

| Type | Part no. | Std. pack | Type | Part no. | Std. pack |
|---|---|---|---|---|---|
| RFK 1/150 K S35 | 56.397.0155.0 | | RFK 1/150 K PA | 59.197.0155.0 | 10 |
| RFK 1/150 FK S35 | 56.397.0255.0 | | RFK 1/150 FK PA | 59.197.0255.0 | 10 |
| RFK 1/150 FMK S35 | 56.397.1255.0 | | RFK 1/150 FMK PA | 59.197.1255.0 | 10 |
| 35 x 27 x 7,5 EN 60715 | 98.300.0000.0 | 1 | | | |
| 35 x 24 x 15 EN 60715 | 98.360.0000.0 | 1 | | | |
| | | | 9006 EN 60715 G-32 | 98.190.0000.0 | 1 |
| WE 2/U | Z5.523.5653.0 | 100 | WE 2/U | Z5.523.5653.0 | 100 |
| 9708/2 S35 | Z5.522.8553.0 | 100 | 9708/2 S 35 | Z5.522.8553.0 | 100 |
| 9708 | Z5.522.7053.0 | 100 | 9708 | Z5.522.7053.0 | 100 |
| | Z7.409.5753.0 | 10 | | Z7.409.5753.0 | 10 |
| TE/RFK 1/150 - 240 PA | 07.340.1053.0 | 50 | TE/RFK 1/150 - 240 PA | 07.340.1053.0 | 50 |
| | | | AM 5 x 12 DIN 933 | 06.065.0021.0 | 100 |
| VB RFK 1/185/2 | 07.201.4227.0 | 10 | VB RFK 1/185/2 | 07.201.4227.0 | 10 |
| VB RFK 1/185/3 | 07.201.4327.0 | 10 | VB RFK 1/185/3 | 07.201.4327.0 | 10 |
| VB RFK 1/185/4 | 07.201.4427.0 | 10 | VB RFK 1/185/4 | 07.201.4427.0 | 10 |

Configurations:

**F**

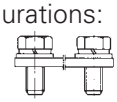

**K**

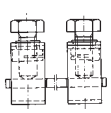

**FK**

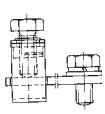

**FM**

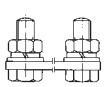

**FMK**

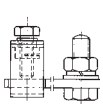

# Terminal blocks for up to 240 mm² (500 MCM)

# selos POWER LINE

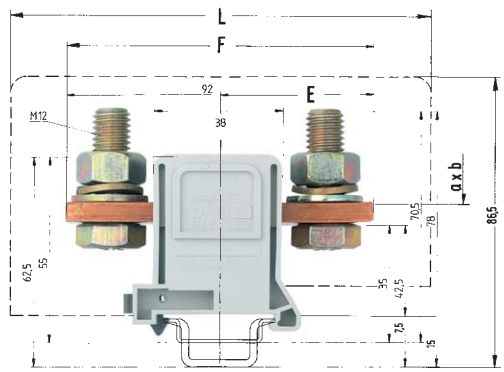


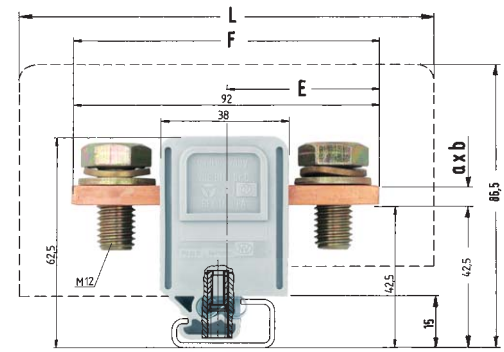


| | | RFK 1/185... S35 | | | | RFK 1/185... PA | | | |
|---|---|---|---|---|---|---|---|---|---|
| | | | | V | A | | | V | A |
| EN 60 947-7-1/DIN VDE 0611 T1 | | | | 1000 V/8 kV/3 | 353 | | | 1000 V/8 kV/3 | 353 |
| UL-ratings | field/factory wiring | 0 AWG - 400 kcmil | | 600 V | 375 | 0 AWG - 400 kcmil | | 600 V | 375 |
| CSA ratings | | 0 AWG - 400 MCM | | 600 V | 375 | 0 AWG - 400 MCM | | 600 V | 375 |
| Width | Wire strip length | 42 mm | | | 27 mm | 42 mm | | | 27 mm |
| Approvals | | | | | | | | | |

| | | | Type | Part no. | Std. pack | Type | Part no. | Std. pack |
|---|---|---|---|---|---|---|---|---|
| **Configuration** | Color: gray | **F** | RFK 1/185 F S 35 | 56.398.0055.0 | 10 | RFK 1/185 F PA | 59.198.0055.0 | 10 |
| | Color: gray | **K** | | | | | | |
| | Color: gray | **FK** | | | | | | |
| | Color: gray | **FM** | RFK 1/185 FM S 35 | 56.398.1055.0 | 10 | RFK 1/185 FM PA | 59.198.1055.0 | 10 |
| | Color: gray | **FMK** | | | | | | |
| | | | | | | | | |
| | | | | | | | | |
| **Accessories** | | | | | | | | |
| 1. Mounting rail TS 35, DIN rail, 7.5 mm high | | L = 2 m | 35 x 27 x 7,5 EN 60715 | 98.300.0000.0 | 1 | | | |
| Mounting rail TS 35, DIN rail 15 mm high | | L = 2 m | 35 x 24 x 15 EN 60715 | 98.360.0000.0 | 1 | | | |
| Mounting rail TS 35, G rail | | L = 2 m | | | | 9006 EN 60715 G-32 | 98.190.0000.0 | 1 |
| 2. End clamp with U-foot | | 10 mm wide | WE 2/U | Z5.523.5653.0 | 100 | WE 2/U | Z5.523.5653.0 | 100 |
| End clamp TS32 with screw | | 8 mm wide | 9708/2 S35 | Z5.522.8553.0 | 100 | | | |
| End clamp TS32 with screw | | 7.5 mm wide | | | | 9708 | Z5.522.7053.0 | 100 |
| 3. Cover for RFK 1/... | | Color: yellow | | Z7.409.5853.0 | 10 | | Z7.409.5853.0 | 10 |
| 4. Partition/end plate PA 66/6 | | 2.8 mm thick | TE/RFK 1/150 - 240 PA | 07.340.1053.0 | 50 | TE/RFK 1/150 - 240 PA | 07.340.1053.0 | 50 |
| 5. Screws for fixation on the mounting rail | | | | | | AM 5 x 12 DIN 933 | 06.065.0021.0 | 100 |
| 6. Jumper bar for tab connection blocks | | from E-Cu | | | | | | |
| | | for 2 blocks | VB RFK 1/185/2 | 07.201.4227.0 | 10 | VB RFK 1/185/2 | 07.201.4227.0 | 10 |
| | | for 3 blocks | VB RFK 1/185/3 | 07.201.4327.0 | 10 | VB RFK 1/185/3 | 07.201.4327.0 | 10 |
| | | for 4 blocks | VB RFK 1/185/4 | 07.201.4427.0 | 10 | VB RFK 1/185/4 | 07.201.4427.0 | 10 |

For marking systems see pages 178-179 and 200-202

# selos



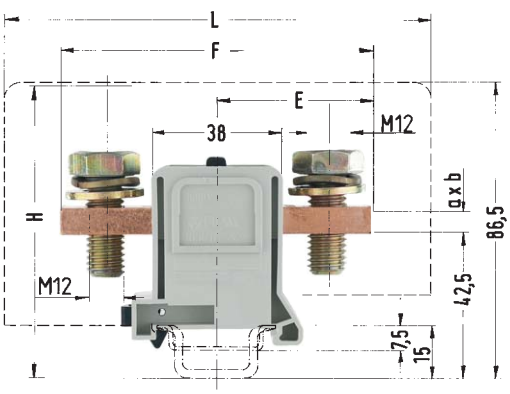


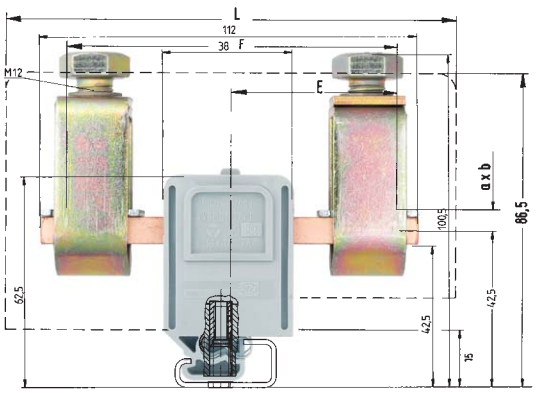


## RFK 1/240... S35

| fine stranded | stranded | V | A |
|---|---|---|---|
| 70-240 mm² | 70-240 mm² | 1000 V/8 kV/3 | 415 |
| 0 AWG - 500 kcmil | | 600 V | 375 |
| 3/0 AWG - 500 MCM | | 600 V | 425 |
| 42 mm | | | 27 mm |

## RFK 1/240... PA

| fine stranded | stranded | V | A |
|---|---|---|---|
| 70-240 mm² | 70-240 mm² | 1000 V/8 kV/3 | 415 |
| 0 AWG - 500 kcmil | | 600 V | 375 |
| 3/0 AWG - 500 MCM | | 600 V | 425 |
| 42 mm | | | 27 mm |

| mm² | Type | a x b | M I | M II | H | L | F | E |
|---|---|---|---|---|---|---|---|---|
| 185 | F, FM | 6 x 26 | M 12 | – | – | 200 | 92 | 46 |
| 240 | F, FM | 8 x 26 | M 12 | – | – | 200 | 92 | 46 |
| | FK, FMK | 8 x 26 | M 12 | M 12 | 100.5 | 200 | 102 | 46 |
| | K | 8 x 26 | – | M 12 | 100.5 | 200 | 112 | 56 |

| Type | Part no. | Std. pack | Type | Part no. | Std. pack |
|---|---|---|---|---|---|
| RFK 1/240 F S 35*) | 56.399.0055.0 | 10 | RFK 1/240 F PA*) | 59.199.0055.0 | 10 |
| RFK 1/240 K S 35 | 56.399.0155.0 | 10 | RFK 1/240 K PA | 59.199.0155.0 | 10 |
| RFK 1/240 FK S 35*) | 56.399.0255.0 | 10 | RFK 1/240 FK PA*) | 59.199.0255.0 | 10 |
| RFK 1/240 FM S 35*) | 56.399.1055.0 | 10 | RFK 1/240 FM PA*) | 59.199.1055.0 | 10 |
| RFK 1/240 FMK S 35*) | 56.399.1255.0 | 10 | RFK 1/240 FMK PA*) | 59.199.1255.0 | 10 |
| | | | | | |
| | | | | | |
| | | | | | |
| 35 x 27 x 7,5 EN 60715 | 98.300.0000.0 | 1 | | | |
| 35 x 24 x 15 EN 60715 | 98.360.0000.0 | 1 | | | |
| | | | 9006 EN 60715 G-32 | 98.190.0000.0 | 1 |
| WE 2/U | Z5.523.5653.0 | 100 | WE 2/U | Z5.523.5653.0 | 100 |
| 9708/2 S 35 | Z5.522.8553.0 | 100 | | | |
| | | | 9708 | Z5.522.7053.0 | 100 |
| | Z7.409.5853.0 | 10 | | Z7.409.5853.0 | 10 |
| TE/RFK 1/150 - 240 PA | 07.340.1053.0 | 50 | TE/RFK 1/150 - 240 PA | 07.340.1053.0 | 50 |
| | | | AM 5 x 12 DIN 933 | 06.065.0021.0 | 100 |
| | | | | | |
| VB RFK 1/240/2 | 07.201.8227.0 | 10 | VB RFK 1/240/2 | 07.201.8227.0 | 10 |
| VB RFK 1/240/3 | 07.201.8327.0 | 10 | VB RFK 1/240/3 | 07.201.8327.0 | 10 |
| VB RFK 1/240/4 | 07.201.8427.0 | 10 | VB RFK 1/240/4 | 07.201.8427.0 | 10 |

*) Only use ring terminals accord. to DIN 46234

Configurations:

**F**

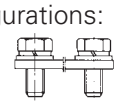

**K**

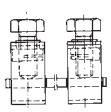

**FK**

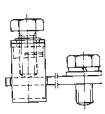

**FM**

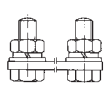

**FMK**

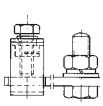

# Accessories
# for DIN rail terminal blocks

selos

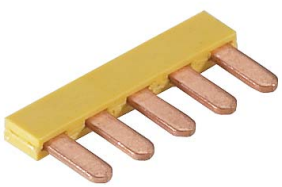

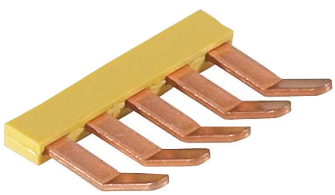

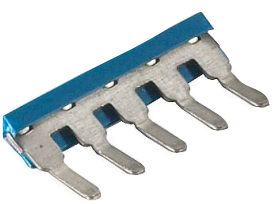

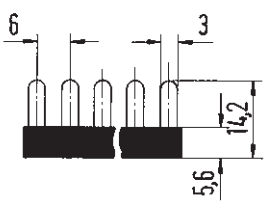


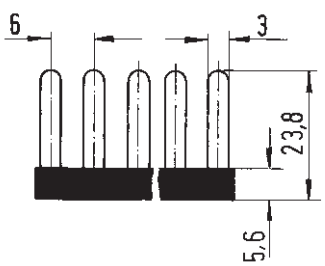


## Jumper comb, insulated

| Type | Part no. | Std. pack |
|---|---|---|
| for terminal blocks type | | |
| **WK 2,5-4 KI/U** | | |
| **WK 2,5-4 KI/U-NGN** | | |
| **WK 2,5-4 KI/U-PGN** | | |
| **WK 2,5-4 KI SL** | | |
| **WK 2,5-4 KI SL-NGN** | | |
| **WK 2,5-4 KI SL-PGN** | | |
| **WK 2,5-3 D/U** | | |
| **WK 2,5-3 D/U-NGN** | | |
| **WK 2,5-3 D/U-PGN** | | |
| **WK 2,5-3 D SL** | | |
| **WK 2,5-3 D SL-NGN** | | |
| **WK 2,5-3 D SL-PGN** | | |
| 0.8 mm thick, angled | | |
| 2pole VB WK 2,5-K-2 red | Z7.267.0227.5 | 10 |
| 3pole IVB WK 2,5-K-3 red | Z7.267.0327.5 | 10 |
| 4pole IVB WK 2,5-K-4 red | Z7.267.0427.5 | 10 |
| 5pole IVB WK 2,5-K-5 red | Z7.267.0527.5 | 10 |
| 6pole IVB WK 2,5-K-6 red | Z7.267.0627.5 | 10 |
| 7pole IVB WK 2,5-K-7 red | Z7.267.0727.5 | 10 |
| 8pole IVB WK 2,5-K-8 red | Z7.267.0827.5 | 10 |
| 9pole IVB WK 2,5-K-9 red | Z7.267.0927.5 | 10 |
| 10pole IVB WK 2,5-K-10 red | Z7.267.1027.5 | 10 |
| 11pole IVB WK 2,5-K-11 red | Z7.267.1127.5 | 10 |
| 12pole IVB WK 2,5-K-12 red | Z7.267.1227.5 | 10 |
| 70pole IVB WK 2,5-K M-70 red | Z7.267.0027.5 | 10 |
| 0.8 mm thick, angled | | |
| 2pole IVB WK 2,5-K-2 blue | Z7.267.0227.6 | 10 |
| 3pole IVB WK 2,5-K-3 blue | Z7.267.0327.6 | 10 |
| 4pole IVB WK 2,5-K-4 blue | Z7.267.0427.6 | 10 |
| 5pole IVB WK 2,5-K-5 blue | Z7.267.0527.6 | 10 |
| 6pole IVB WK 2,5-K-6 blue | Z7.267.0627.6 | 10 |
| 7pole IVB WK 2,5-K-7 blue | Z7.267.0727.6 | 10 |
| 8pole IVB WK 2,5-K-8 blue | Z7.267.0827.6 | 10 |
| 9pole IVB WK 2,5-K-9 blue | Z7.267.0927.6 | 10 |
| 10pole VB WK 2,5-K-10 blue | Z7.267.1027.6 | 10 |
| 11pole IVB WK 2,5-K-11 blue | Z7.267.1127.6 | 10 |
| 12pole IVB WK 2,5-K-12 blue | Z7.267.1227.6 | 10 |
| 70pole VB WK 2,5-K M-70 blue | Z7.267.0027.6 | 10 |

| Type | Part no. | Std. pack |
|---|---|---|
| **WK 4 E/U** | | |
| 1 mm thick | | |
| 2pole IVB WK 4 E-2 | Z7.255.2227.0 | 10 |
| 3pole IVB WK 4 E-3 | Z7.255.2327.0 | 10 |
| 4pole IVB WK 4 E-4 | Z7.255.2427.0 | 10 |
| 5pole IVB WK 4 E-5 | Z7.255.2527.0 | 10 |
| 6pole IVB WK 4 E-6 | Z7.255.2627.0 | 10 |
| 7pole IVB WK 4 E-7 | Z7.255.2727.0 | 10 |
| 8pole IVB WK 4 E-8 | Z7.255.2827.0 | 10 |
| 9pole IVB WK 4 E-9 | Z7.255.2927.0 | 10 |
| 10pole IVB WK 4 E-10 | Z7.255.3027.0 | 10 |
| 11pole IVB WK 4 E-11 | Z7.255.3127.0 | 10 |
| 12pole IVB WK 4 E-12 | Z7.255.3227.0 | 10 |
| **for lower tier blocks only** | | |

| Type | Part no. | Std. pack |
|---|---|---|
| **WK 4 E/U** | | |
| 1 mm thick, angled | | |
| 2pole IVBS WK 4 E-2 | Z7.256.4227.0 | 10 |
| 3pole IVBS WK 4 E-3 | Z7.256.4327.0 | 10 |
| 4pole IVBS WK 4 E-4 | Z7.256.4427.0 | 10 |
| 5pole IVBS WK 4 E-5 | Z7.256.4527.0 | 10 |
| 6pole IVBS WK 4 E-6 | Z7.256.4627.0 | 10 |
| 7pole IVBS WK 4 E-7 | Z7.256.4727.0 | 10 |
| 8pole IVBS WK 4 E-8 | Z7.256.4827.0 | 10 |
| 9pole IVBS WK 4 E-9 | Z7.256.4927.0 | 10 |
| 10pole IVBS WK 4 E-10 | Z7.256.5027.0 | 10 |
| 11pole IVBS WK 4 E-11 | Z7.256.5127.0 | 10 |
| 12pole IVBS WK 4 E-12 | Z7.256.5227.0 | 10 |
| **for lower tier blocks only** | | |

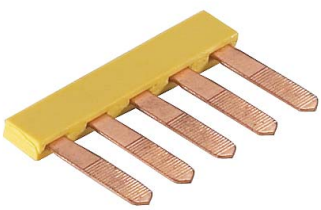

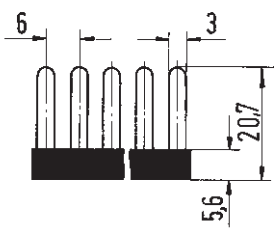


## Switchable connecting link

| Type | Part no. | Std. pack |
|---|---|---|
| **WK 4 TKG/U** | | |
| **WK 4 TKM/U** | | |
| **WK 4/U** | | |
| **WK 4 TKS D/U** | | |
| **WK 4 TKG-TRST/U** | | |
| 0.5 mm thick | | |
| 2pole IVB 0,5 WK 4..-2 | Z7.255.0227.0 | 10 |
| 3pole IVB 0,5 WK 4..-3 | Z7.255.0327.0 | 10 |
| 4pole IVB 0,5 WK 4..-4 | Z7.255.0427.0 | 10 |
| 5pole IVB 0,5 WK 4..-5 | Z7.255.0527.0 | 10 |
| 6pole IVB 0,5 WK 4..-6 | Z7.255.0627.0 | 10 |
| 7pole IVB 0,5 WK 4..-7 | Z7.255.0727.0 | 10 |
| 8pole IVB 0,5 WK 4..-8 | Z7.255.0827.0 | 10 |
| 9pole IVB 0,5 WK 4..-9 | Z7.255.0927.0 | 10 |
| 10pole IVB 0,5 WK 4..-10 | Z7.255.1027.0 | 10 |
| 11pole IVB 0,5 WK 4..-11 | Z7.255.1127.0 | 10 |
| 12pole IVB 0,5 WK 4..-12 | Z7.255.1227.0 | 10 |
| 1 mm thick | | |
| 2pole IVB 1 WK 4..-2 | Z7.255.4227.0 | 10 |
| 3pole IVB 1 WK 4..-3 | Z7.255.4327.0 | 10 |
| 4pole IVB 1 WK 4..-4 | Z7.255.4427.0 | 10 |
| 5pole IVB 1 WK 4..-5 | Z7.255.4527.0 | 10 |
| 6pole IVB 1 WK 4..-6 | Z7.255.4627.0 | 10 |
| 7pole IVB 1 WK 4..-7 | Z7.255.4727.0 | 10 |
| 8pole IVB 1 WK 4..-8 | Z7.255.4827.0 | 10 |
| 9pole IVB 1 WK 4..-9 | Z7.255.4927.0 | 10 |
| 10pole IVB 1 WK 4..-10 | Z7.255.5027.0 | 10 |
| 11pole IVB 1 WK 4..-11 | Z7.255.5127.0 | 10 |
| 12pole IVB 1 WK 4..-12 | Z7.255.5227.0 | 10 |

| Type | Part no. | Std. pack |
|---|---|---|
| for terminal block type | | |
| **WK 2,5/U** | Z7.269.4023.0 | 50 |
| **WK 4/U** | Z7.269.4123.0 | 50 |
| **WK 6/U** | Z7.269.4223.0 | 50 |
| **WK 4 E/..** | Z7.269.2923.0 | 50 |
| **WKM 2,5** | Z7.269.3623.0 | 50 |
| **WKM 4** | Z7.269.0623.0 | 50 |

Switchable connecting links reduce the nominal voltage to 380 V!

| | |
|---|---|
| Link: | nickel-plated brass |
| Bolt: | nickel-plated brass |
| Screw: | zinc-plated steel |

| Type | Part no. | Std. pack |
|---|---|---|

# Accessories
# for DIN rail terminal blocks

selos

## Cross connectors (jumper bars), insulated

| Type | Part no. | Std. pack |
|---|---|---|
| for terminal blocks type | | |
| **WK 2,5 U** | **5 mm spacing Screw: M 2.5** | |
| **WK 2,5-4 KOI/U** | | |
| **WK 2,5 U/8113 S/H** | | |
| 2pole IVB WK 2,5-2 | Z7.280.2227.0 | 10 |
| 3pole VB WK 2,5-3 | Z7.280.2327.0 | 10 |
| 4pole IVB WK 2,5-4 | Z7.280.2427.0 | 10 |
| 5pole IVB WK 2,5-5 | Z7.280.2527.0 | 10 |
| 6pole IVB WK 2,5-6 | Z7.280.2627.0 | 10 |
| 7pole IVB WK 2,5-7 | Z7.280.2727.0 | 10 |
| 8pole IVB WK 2,5-8 | Z7.280.2827.0 | 10 |
| 9pole IVB WK 2,5-9 | Z7.280.2927.0 | 10 |
| 10pole IVB WK 2,5-10 | Z7.280.3027.0 | 10 |
| 11pole IVB WK 2,5-11 | Z7.280.3127.0 | 10 |
| 12pole IVB WK 2,5-12 | Z7.280.3227.0 | 10 |
| **WK 2,5-3 D/U** | **6 mm spacing Screw: M 2.5** | |
| **WK 2,5-3 D SL** | | |
| 2pole IVB WK 2,5-3 D-2 | Z7.270.0227.0 | 10 |
| 3pole VB WK 2,5-3 D-3 | Z7.270.0327.0 | 10 |
| 4pole IVB WK 2,5-3 D-4 | Z7.270.0427.0 | 10 |
| 5pole IVB WK 2,5-3 D-5 | Z7.270.0527.0 | 10 |
| 6pole IVB WK 2,5-3 D-6 | Z7.270.0627.0 | 10 |
| 7pole IVB WK 2,5-3 D-7 | Z7.270.0727.0 | 10 |
| 8pole IVB WK 2,5-3 D-8 | Z7.270.0827.0 | 10 |
| 9pole IVB WK 2,5-3 D-9 | Z7.270.0927.0 | 10 |
| 10pole IVB WK 2,5-3 D-10 | Z7.270.1027.0 | 10 |
| 11pole IVB WK 2,5-3 D-11 | Z7.270.1127.0 | 10 |
| 12pole IVB WK 2,5-3 D-12 | Z7.270.1227.0 | 10 |
| 70pole IVB WK 2,5-3 D M-70 | Z7.270.0027.0 | 10 |

| Type | Part no. | Std. pack |
|---|---|---|
| **WK 4 TKG/U** | **6 mm spacing Screw: M 3** | |
| **WK 4 TKM/U** | | |
| **WK 4/U** | | |
| **WK 4 TKS D/U** | | |
| **WK 4 TKG-TRST/U** | | |
| 12pole IVB WKI 4-12 | Z7.271.5227.0 | 10 |
| **WK 4/U** | **6 mm spacing Screw: M 3** | |
| **WK 4 TKS D/U** | | |
| **WK 4 3 S 1 K/U** | | |
| **WK 4 3-6 S 1 K/U** | | |
| **WK 4 5 S 2,8 1 K/U** | | |
| **WK 4 3 S 1 K/W/U** | | |
| **WK 4 3-6 S 1 K/W/U** | | |
| **WK 4/U F1** | | |
| **WK 4/U F2** | | |
| 2pole IVB WK 4-2 | Z7.281.1227.0 | 10 |
| 3pole IVB WK 4-3 | Z7.281.1327.0 | 10 |
| 4pole IVB WK 4-4 | Z7.281.1427.0 | 10 |
| 5pole IVB WK 4-5 | Z7.281.1527.0 | 10 |
| 6pole IVB WK 4-6 | Z7.281.1627.0 | 10 |
| 7pole IVB WK 4-7 | Z7.281.1727.0 | 10 |
| 8pole IVB WK 4-8 | Z7.281.1827.0 | 10 |
| 9pole IVB WK 4-9 | Z7.281.1927.0 | 10 |
| 10pole IVB WK 4-10 | Z7.281.2027.0 | 10 |
| 11pole IVB WK 4-11 | Z7.281.2127.0 | 10 |
| 12pole IVB WK 4-12 | Z7.281.2227.0 | 10 |

| Type | Part no. | Std. pack |
|---|---|---|
| **WK 4 E/U** | **6 mm spacing Screw: M 3** | |
| **WKM 4** | | |
| 2pole IVB WK 4E/U-2 | Z7.271.2227.0 | 10 |
| 3pole IVB WK 4E/U-3 | Z7.271.2327.0 | 10 |
| 4pole IVB WK 4E/U-4 | Z7.271.2427.0 | 10 |
| 5pole IVB WK 4E/U-5 | Z7.271.2527.0 | 10 |
| 6pole IVB WK 4E/U-6 | Z7.271.2627.0 | 10 |
| 7pole IVB WK 4E/U-7 | Z7.271.2727.0 | 10 |
| 8pole IVB WK 4E/U-8 | Z7.271.2827.0 | 10 |
| 9pole IVB WK 4E/U-9 | Z7.271.2927.0 | 10 |
| 10pole IVB WK 4E/U-10 | Z7.271.3027.0 | 10 |
| 11pole IVB WK 4E/U-11 | Z7.271.3127.0 | 10 |
| 12pole IVB WK 4E/U-12 | Z7.271.3227.0 | 10 |
| **WK 4/D 1/2 U** | **6 mm spacing Screw: M 3** | |
| **WK 4/D 2/2 U** | | |
| 2pole IVB WK 4/D..-2 | Z7.281.7227.0 | 10 |
| 3pole IVB WK 4/D..-3 | Z7.281.7327.0 | 10 |
| 4pole IVB WK 4/D..-4 | Z7.281.7427.0 | 10 |
| 5pole IVB WK 4/D..-5 | Z7.281.7527.0 | 10 |
| 6pole IVB WK 4/D..-6 | Z7.281.7627.0 | 10 |
| 7pole IVB WK 4/D..-7 | Z7.281.7727.0 | 10 |
| 8pole IVB WK 4/D..-8 | Z7.281.7827.0 | 10 |
| 9pole IVB WK 4/D..-9 | Z7.281.7927.0 | 10 |
| 10pole IVB WK 4/D..-10 | Z7.281.8027.0 | 10 |
| 11pole IVB WK 4/D..-11 | Z7.281.8127.0 | 10 |
| 12pole IVB WK 4/D..-12 | Z7.281.8227.0 | 10 |
| **WK 4/DEU** | **6 mm spacing Screw: M 3** | |
| 2pole IVB WK 4/DEU-2 | Z7.271.0227.0 | 10 |
| 3pole IVB WK 4/DEU-3 | Z7.271.0327.0 | 10 |
| 4pole IVB WK 4/DEU-4 | Z7.271.0427.0 | 10 |
| 5pole IVB WK 4/DEU-5 | Z7.271.0527.0 | 10 |
| 6pole IVB WK 4/DEU-6 | Z7.271.0627.0 | 10 |
| 7pole IVB WK 4/DEU-7 | Z7.271.0727.0 | 10 |
| 8pole IVB WK 4/DEU-8 | Z7.271.0827.0 | 10 |
| 9pole IVB WK 4/DEU-9 | Z7.271.0927.0 | 10 |
| 10pole IVB WK 4/DEU-10 | Z7.271.1027.0 | 10 |
| 11pole IVB WK 4/DEU-11 | Z7.271.1127.0 | 10 |
| 12pole IVB WK 4/DEU-12 | Z7.271.1227.0 | 10 |

| Type | Part no. | Std. pack |
|---|---|---|
| **WK 6/U** | **8 mm spacing Screw: M 3** | |
| 2pole IVB WK 6-2 | Z7.282.2227.0 | 10 |
| 3pole IVB WK 6-3 | Z7.282.2327.0 | 10 |
| 4pole IVB WK 6-4 | Z7.282.2427.0 | 10 |
| 5pole IVB WK 6-5 | Z7.282.2527.0 | 10 |
| 6pole IVB WK 6-6 | Z7.282.2627.0 | 10 |
| 7pole IVB WK 6-7 | Z7.282.2727.0 | 10 |
| 8pole IVB WK 6-8 | Z7.282.2827.0 | 10 |
| 9pole IVB WK 6-9 | Z7.282.2927.0 | 10 |
| 10pole IVB WK 6-10 | Z7.282.3027.0 | 10 |
| 11pole IVB WK 6-11 | Z7.282.3127.0 | 10 |
| 12pole IVB WK 6-12 | Z7.282.3227.0 | 10 |
| **WKN 10/U** | **10 mm spacing Screw: M 3.5** | |
| 2pole IVB WKN 10-2 | Z7.283.2227.0 | 10 |
| 3pole IVB WKN 10-3 | Z7.283.2327.0 | 10 |
| 4pole IVB WKN 10-4 | Z7.283.2427.0 | 10 |
| 5pole IVB WKN 10-5 | Z7.283.2527.0 | 10 |
| 6pole IVB WKN 10-6 | Z7.283.2627.0 | 10 |
| 7pole IVB WKN 10-7 | Z7.283.2727.0 | 10 |
| 8pole IVB WKN 10-8 | Z7.283.2827.0 | 10 |
| 9pole IVB WKN 10-9 | Z7.283.2927.0 | 10 |
| 10pole IVB WKN 10-10 | Z7.283.3027.0 | 10 |
| 11pole IVB WKN 10-11 | Z7.283.3127.0 | 10 |
| 12pole IVB WKN 10-12 | Z7.283.3227.0 | 10 |

| Type | Part no. | Std. pack |
|---|---|---|
| **WKN 16/U** | **12 mm spacing Screw: M 4** | |
| 2pole IVB WKN 16-2 | Z7.284.2227.0 | 10 |
| 3pole IVB WKN 16-3 | Z7.284.2327.0 | 10 |
| 4pole IVB WKN 16-4 | Z7.284.2427.0 | 10 |
| 5pole IVB WKN 16-5 | Z7.284.2527.0 | 10 |
| 6pole IVB WKN 16-6 | Z7.284.2627.0 | 10 |
| 7pole IVB WKN 16-7 | Z7.284.2727.0 | 10 |
| 8pole IVB WKN 16-8 | Z7.284.2827.0 | 10 |
| 9pole IVB WKN 16-9 | Z7.284.2927.0 | 10 |
| 10pole IVB WKN 16-10 | Z7.284.3027.0 | 10 |
| 11pole IVB WKN 16-11 | Z7.284.3127.0 | 10 |
| 12pole IVB WKN 16-12 | Z7.284.3227.0 | 10 |
| 30pole IVB WKN 16 M-30 | Z7.284.2027.0 | 10 |
| **WKN 35/U** | **16 mm spacing Screw: M 5** | |
| 2pole IVB WKN 35-2 | Z7.285.2227.0 | 5 |
| 3pole IVB WKN 35-3 | Z7.285.2327.0 | 5 |
| 4pole IVB WKN 35-4 | Z7.285.2427.0 | 5 |
| 5pole IVB WKN 35-5 | Z7.285.2527.0 | 5 |
| 6pole IVB WKN 35-6 | Z7.285.2627.0 | 5 |
| 7pole IVB WKN 35-7 | Z7.285.2727.0 | 5 |
| 8pole IVB WKN 35-8 | Z7.285.2827.0 | 5 |
| 9pole IVB WKN 35-9 | Z7.285.2927.0 | 5 |
| 10pole IVB WKN 35-10 | Z7.285.3027.0 | 5 |
| 11pole IVB WKN 35-11 | Z7.285.3127.0 | 5 |
| 12pole IVB WKN 35-12 | Z7.285.3227.0 | 5 |
| 20pole IVB WKN 35 M-20 | Z7.285.2027.0 | 10 |

# Accessories for DIN rail terminal blocks

selos

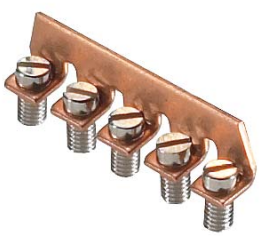

## Cross connectors, (jumper bars) uninsulated

| Type | | Part no. | Std. pack |
|---|---|---|---|
| for terminal blocks type | | | |
| **WK 2,5/U** | | **5 mm spacing Screw: M 2.5** | |
| **WK 2,5 - 4 KOI/U** | | | |
| **WK 2,5 U/8113 S/H** | | | |
| **WKN 2,5 E/U** | | | |
| 2pole | VB WK 2,5-2 | Z7.280.0227.0 | 10 |
| 3pole | VB WK 2,5-3 | Z7.280.0327.0 | 10 |
| 4pole | VB WK 2,5-4 | Z7.280.0427.0 | 10 |
| 5pole | VB WK 2,5-5 | Z7.280.0527.0 | 10 |
| 6pole | VB WK 2,5-6 | Z7.280.0627.0 | 10 |
| 80pole | VB WK 2,5 M-80 | Z7.280.0027.0 | 10 |
| **WKM 2,5/15** | | **5 mm spacing Screw: M 2.5** | |
| **WKM 2,5 F1/15** | | | |
| **WKM 2,5 F2/15** | | | |
| **WKM 2,5/2 S 2,8 1 K/15** | | | |
| **WKM 2,5 TP1 O/15** | | | |
| **WKM 2,5 TP2 O/15** | | | |
| 2pole | VB WKM 2,5/15-2 | Z7.215.4227.0 | 50 |
| 3pole | VB WKM 2,5/15-3 | Z7.215.4327.0 | 50 |
| 4pole | VB WKM 2,5/15-4 | Z7.215.4427.0 | 50 |
| 5pole | VB WKM 2,5/15-5 | Z7.215.4527.0 | 50 |
| 6pole | VB WKM 2,5/15-6 | Z7.215.4627.0 | 50 |
| 60pole | VB WKM 2,5/15 M-60 | Z7.215.4027.0 | 10 |
| **WK/3 S/IW/U** | | **6 mm spacing Screw: M 3** | |
| **WK/3 - 6 S/IW/U** | | | |
| **WK/4 S/IW/U** | | | |
| **WK/4-8 S/IW/U** | | | |
| 2pole | VB WK/...S/IW/U-2 | Z7.281.3227.0 | 10 |
| 3pole | VB WK/...S/IW/U-3 | Z7.281.3327.0 | 10 |
| 4pole | VB WK/...S/IW/U-4 | Z7.281.3427.0 | 10 |
| 5pole | VB WK/...S/IW/U-5 | Z7.281.3527.0 | 10 |
| 6pole | VB WK/...S/IW/U-6 | Z7.281.3627.0 | 10 |
| 20pole | VB WK/...S/IW/U-20 | Z7.281.3027.0 | 10 |

| Type | | Part no. | Std. pack |
|---|---|---|---|
| **WK 4/U** | | **6 mm spacing Screw: M 3** | |
| **WK 4TKS D/U** | | | |
| **WK 4 3 S 1 K/U** | | | |
| **WK 4 3-6 S 1 K/U** | | | |
| **WK 4 5 S 2,8 1 K/U** | | | |
| **WK 4 3 S 1 K/IW/U** | | | |
| **WK 4 3-6 S 1 K/IW/U** | | | |
| **WK 4/U F1** | | | |
| **WK 4/U F2** | | | |
| 2pole | VB WK 4-2 | Z7.281.0227.0 | 10 |
| 3pole | VB WK 4-3 | Z7.281.0327.0 | 10 |
| 4pole | VB WK 4-4 | Z7.281.0427.0 | 10 |
| 5pole | VB WK 4-5 | Z7.281.0527.0 | 10 |
| 6pole | VB WK 4-6 | Z7.281.0627.0 | 10 |
| 70pole | VB WK 4 M-70 | Z7.281.0027.0 | 10 |
| **WK 4/D 1/2 U** | | **6 mm spacing Screw: M 3** | |
| **WK 4/D 2/2 U** | | | |
| 2pole | VB WK 4 D..-2 | Z7.281.6227.0 | 10 |
| 3pole | VB WK 4 D..-3 | Z7.281.6327.0 | 10 |
| 4pole | VB WK 4 D..-4 | Z7.281.6427.0 | 10 |
| 5pole | VB WK 4 D..-5 | Z7.281.6527.0 | 10 |
| 6pole | VB WK 4 D..-6 | Z7.281.6627.0 | 10 |
| 70pole | VB WK 4 D.. M-70 | Z7.281.6027.0 | 10 |
| **WKM 4/15** | | **6 mm spacing Screw: M 3** | |
| **WK 4/D EU** | | | |
| **WK 4 E/U** for upper tier block | | | |
| **WK 4 E/U GU ORANGE** | | | |
| **WK 4 E/U GO** | | | |
| **WK 4 E/U G2** | | | |
| **WK 4 E/U G1 ORANGE** | | | |
| **WK 4 E/U G-URL** | | | |
| **WK 4 E/U G-ULR** | | | |
| **WK 4 E/U VB SCHWARZ** | | | |
| 2pole | 9215 - 2 | Z7.210.3227.0 | 50 |
| 3pole | 9215 - 3 | Z7.210.3327.0 | 50 |
| 4pole | 9215 - 4 | Z7.210.3427.0 | 50 |
| 5pole | 9215 - 5 | Z7.210.3527.0 | 50 |
| 6pole | 9215 - 6 | Z7.210.3627.0 | 50 |
| 70pole | 9215 M-70 | Z7.210.3027.0 | 10 |

| Type | | Part no. | Std. pack |
|---|---|---|---|
| **WK 4/3-6 SKO** | | **6 mm spacing Screw: M 3** | |
| 2pole | 2072/2 | Z7.220.0227.0 | 50 |
| 3pole | 2072/3 | Z7.220.0327.0 | 50 |
| 4pole | 2072/4 | Z7.220.0427.0 | 50 |
| 5pole | 2072/5 | Z7.220.0527.0 | 50 |
| 6pole | 2072/6 | Z7.220.0627.0 | 50 |
| 70pole | 2072/M | Z7.210.1027.0 | 10 |
| **WK/5 S/U** | | **6 mm spacing Screw: M 3** | |
| **WK/5-10 S/U** | | | |
| **WK/3-6 S/U** | | | |
| **WK/4 S/U** | | | |
| **WK/4-8 S/U** | | | |
| 2pole | 9703/6-2 | Z7.211.0227.0 | 50 |
| 3pole | 9703/6-3 | Z7.211.0327.0 | 50 |
| 4pole | 9703/6-4 | Z7.211.0427.0 | 50 |
| 5pole | 9703/6-5 | Z7.211.0527.0 | 50 |
| 6pole | 9703/6-6 | Z7.211.0627.0 | 50 |
| 70pole | 9703/6 M-70 | Z7.211.0027.0 | 10 |

# selos

| Type | Part no. | Std. pack |
|---|---|---|
| **WK 6/U** | **8 mm spacing Screw: M 3.5** | |
| 2pole VB WK 6-2 | Z7.282.0227.0 | 10 |
| 3pole VB WK 6-3 | Z7.282.0327.0 | 10 |
| 4pole VB WK 6-4 | Z7.282.0427.0 | 10 |
| 5pole VB WK 6-5 | Z7.282.0527.0 | 10 |
| 6pole VB WK 6-6 | Z7.282.0627.0 | 10 |
| 40pole VB WK 6 M-40 | Z7.282.0027.0 | 10 |
| **WK 10/Si U 5 x 20** | **Spacing: 8 mm Screw: M 3** | |
| **WK 10/Si U 5 x 25** | | |
| **WK 10/Si U 5 x 30** | | |
| **WK 10/Si U 6,3 x 32** | | |
| **WK 10/Si UD** | | |
| 2pole VB WK 10/Si-2 | Z7.287.0227.0 | 10 |
| 3pole VB WK 10/Si-3 | Z7.287.0327.0 | 10 |
| 4pole VB WK 10/Si-4 | Z7.287.0427.0 | 10 |
| 5pole VB WK 10/Si-5 | Z7.287.0527.0 | 10 |
| 6pole VB WK 10/Si-6 | Z7.287.0627.0 | 10 |
| 30pole VB WK 10/Si M-30 | Z7.287.0027.0 | 10 |
| **WKN 10/U** | **10 mm spacing Screw: M 3.5** | |
| 2pole VB WKN 10-2 | Z7.283.6227.0 | 10 |
| 3pole VB WKN 10-3 | Z7.283.6327.0 | 10 |
| 4pole VB WKN 10-4 | Z7.283.6427.0 | 10 |
| 5pole VB WKN 10-5 | Z7.283.6527.0 | 10 |
| 6pole VB WKN 10-6 | Z7.283.6627.0 | 10 |
| 40pole VB WKN 10 M-40 | Z7.283.6027.0 | 10 |
| **WKN 70/U** | **Spacing: 24 mm Screw: M 6** | |
| 2pole VB WKN 70-2 | Z7.286.3227.0 | 5 |
| 3pole VB WKN 70-3 | Z7.286.3327.0 | 5 |
| 4pole VB WKN 70-4 | Z7.286.3427.0 | 5 |
| 5pole VB WKN 70-5 | Z7.286.3527.0 | 5 |
| 6pole VB WKN 70-6 | Z7.286.3627.0 | 5 |
| **WKN 150/U** | **28 mm spacing Screw: M 8** | |
| 2pole VB WKN 150-2 | Z7.287.1227.0 | 5 |
| 3pole VB WKN 150-3 | Z7.287.1327.0 | 5 |

# Accessories
# for DIN rail terminal blocks

selos

## Single cover

for cross connector (jumper bar)

| Type | Part no. | Std. pack | Type | Part no. | Std. pack |
|---|---|---|---|---|---|
| for terminal block type | | | **WK 4 E/U** | | |
| | | | **WKM 4/15** | | |
| **WK 2,5/U** | | | AD VB 4/15 GELB | 04.326.2953.8 | 10 |
| **WK 2,5-4 KOI/U** | | | | | |
| **WK 2,5 E/U** | | | | | |
| AD VB 2,5 GELB | 04.326.2053.8 | 10 | **WK6/U** | | |
| | | | **WK 6 ETK/U** | | |
| | | | AD VB 6 GELB | 04.326.2253.8 | 10 |
| **WKM 2,5 F..** | | | | | |
| **WKM 2,5/15** | | | | | |
| AD VB 2,5/15 GELB | 04.326.3053.8 | 10 | **WKN 10/U** | | |
| | | | **WKN 10 ETK/35** | | |
| | | | AD VB 10 GELB | 04.326.2353.8 | 10 |
| **WK/3 S/..** | | | | | |
| **WK 4/U** | | | | | |
| **WK 4/U F..** | | | **WK 10/Si U without marking facilities** | | |
| **WK 4 SL/35** | | | | 04.312.2056.10 | |
| **WK 4 ETK/U** | | | | | |
| **WK 4/D..** | | | | | |
| **WK 4 TKS D/U** | | | **WKN 35/U** | | |
| **WK/4 S/..** | | | AD VB 35 GELB | 04.326.2553.8 | 10 |
| **WK 4 3..** | | | | | |
| **WK 4 5..** | | | | | |
| **WK 5..** | | | **WKN 70/U** | | |
| AD VB 4 GELB | 04.326.2153.8 | 10 | AD VB 70 GELB | 04.326.2653.8 | 10 |

## Partition plate

with marking facilities

| Type | Part no. | Std. pack |
|---|---|---|
| for terminal block type | | |
| **WK 2,5/U** | | |
| TS 2,5 GELB | 07.311.2053.8 | 10 |
| | | |
| | | |
| **WK/3...** | | |
| **WK 4/U** | | |
| **WK 4/...** | | |
| **WK 4 3 ...** | | |
| **WK 4 5 S** | | |
| **WK 5** | | |
| TS 4 GELB | 07.311.2153.8 | 10 |
| | | |
| | | |
| **WK 6/U** | | |
| TS 6 GELB | 07.311.2253.8 | 10 |
| | | |
| | | |
| **WKM 2,5 F...** | | |
| TSM 2,5/15 | 07.311.2853.8 | 10 |
| | | |
| | | |
| **WKM 4/15** | | |
| TS 4/15 GELB | 07.311.2953.8 | 10 |
| | | |
| | | |
| | | |
| Partition plate with cover | | |
| **WKN 16/U** | | |
| TSN AD 16 GELB | 07.311.8553.8 | 10 |

## Partition

with marking facilities

| Type | Part no. | Std. pack |
|---|---|---|
| for TS 32 + 35 | Z7.311.1753.0 | |
| for TS 15 | Z7.311.2753.0 | 10 |

# Accessories for DIN rail terminal blocks

selos

## Jumper combs, uninsulated

(for rated voltages of up to 50 V)

| Type | | Part no. | Std. pack |
|---|---|---|---|
| for terminal block type | | | |
| **9785 U/10Ω bis 50 kΩ** | | | |
| **9785 U/10Ω-SPT bis 50 kΩ-SPT** | | | |
| **9786 U/12** | | | |
| **9786 U/12 D** | | | |
| **9786 U/12 D-G1** | | | |
| **9786 U/12 G 2-4 K** | | | |
| **9786 U/12 G 2-3 K** | | | |
| 1 mm thick | | | |
| 2pole | VB 9786-2 | 07.253.0227.0 | 50 |
| 3pole | VB 9786-3 | 07.253.0327.0 | 50 |
| 4pole | VB 9786-4 | 07.253.0427.0 | 50 |

| Type | | Part no. | Std. pack |
|---|---|---|---|
| **WK 4 E/U** | | | |
| 1 mm thick | | | |
| 2pole | VB WK 4 E-2 | 07.255.2227.0 | 10 |
| 3pole | VB WK 4 E-3 | 07.255.2327.0 | 10 |
| 4pole | VB WK 4 E-4 | 07.255.2427.0 | 10 |
| 5pole | VB WK 4 E-5 | 07.255.2527.0 | 10 |
| 6pole | VB WK 4 E-6 | 07.255.2627.0 | 10 |
| 7pole | VB WK 4 E-7 | 07.255.2727.0 | 10 |
| 8pole | VB WK 4 E-8 | 07.255.2827.0 | 10 |
| 9pole | VB WK 4 E-9 | 07.255.2927.0 | 10 |
| 10pole | VB WK 4 E-10 | 07.255.3027.0 | 10 |
| 11pole | VB WK 4 E-11 | 07.255.3127.0 | 10 |
| 12pole | VB WK 4 E-12 | 07.255.3227.0 | 10 |
| 70pole | VB WK 4 EM-70 | 07.255.2027.0 | 10 |
| 1 mm thick, angled | | | |
| 2pole | VBS WK 4 E-2 | 07.256.4227.0 | 10 |
| 3pole | VBS WK 4 E-3 | 07.256.4327.0 | 10 |
| 4pole | VBS WK 4 E-4 | 07.256.4427.0 | 10 |
| 5pole | VVBS WK 4 E-5 | 07.256.4527.0 | 10 |
| 6pole | VBS WK 4 E-6 | 07.256.4627.0 | 10 |
| 7pole | VBS WK 4 E-7 | 07.256.4727.0 | 10 |
| 8pole | VBS WK 4 E-8 | 07.256.4827.0 | 10 |
| 9pole | VBS WK 4 E-9 | 07.256.4927.0 | 10 |
| 10pole | VBS WK 4 E-10 | 07.256.5027.0 | 10 |
| 11pole | VBS WK 4 E-11 | 07.256.5127.0 | 10 |
| 12pole | VBS WK 4 E-12 | 07.256.5227.0 | 10 |

| Type | | Part no. | Std. pack |
|---|---|---|---|
| **WK 4 TKM/U** | | | |
| **WK 4/U** | | | |
| **WK 4 TKS D/U** | | | |
| **WK 4 TKG-TRST/U** | | | |
| 0.5 mm thick | | | |
| 2pole | VB 0,5 WK 4..-2 | 07.255.0227.0 | 50 |
| 3pole | VB 0,5 WK 4..-3 | 07.255.0327.0 | 50 |
| 4pole | VB 0,5 WK 4..-4 | 07.255.0427.0 | 50 |
| 5pole | VB 0,5 WK 4..-5 | 07.255.0527.0 | 10 |
| 6pole | VB 0,5 WK 4..-6 | 07.255.0627.0 | 10 |
| 7pole | VB 0,5 WK 4..-7 | 07.255.0727.0 | 50 |
| 8pole | VB 0,5 WK 4..-8 | 07.255.0827.0 | 10 |
| 9pole | VB 0,5 WK 4..-9 | 07.255.0927.0 | 50 |
| 10pole | VB 0,5 WK 4..-10 | 07.255.1027.0 | 50 |
| 11pole | VB 0,5 WK 4..-11 | 07.255.1127.0 | 50 |
| 12pole | VB 0,5 WK 4..-12 | 07.255.1227.0 | 10 |
| 70pole | VB 0,5 WK 4.. M-70 | 07.255.0027.0 | 10 |
| 1 mm thick | | | |
| 2pole | VB 1 WK 4..-2 | 07.255.4227.0 | 10 |
| 3pole | VB 1 WK 4..-3 | 07.255.4327.0 | 10 |
| 4pole | VB 1 WK 4..-4 | 07.255.4427.0 | 10 |
| 5pole | VB 1 WK 4..-5 | 07.255.4527.0 | 10 |
| 6pole | VB 1 WK 4..-6 | 07.255.4627.0 | 10 |
| 7pole | VB 1 WK 4..-7 | 07.255.4727.0 | 10 |
| 8pole | VB 1 WK 4..-8 | 07.255.4827.0 | 10 |
| 9pole | VB 1 WK 4..-9 | 07.255.4927.0 | 10 |
| 10pole | VB 1 WK 4..-10 | 07.255.5027.0 | 10 |
| 11pole | VB 1 WK 4..-11 | 07.255.5127.0 | 10 |
| 12pole | VB 1 WK 4..-12 | 07.255.5227.0 | 10 |
| 70pole | VB 1 WK 4.. M-70 | 07.255.4027.0 | 10 |

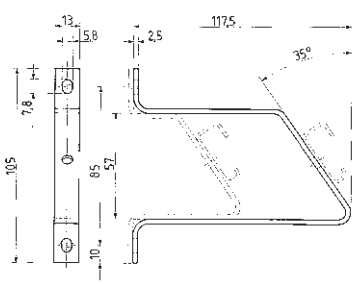


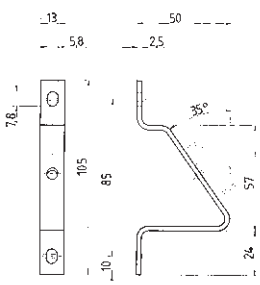


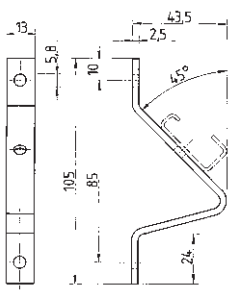


## Angled support bracket

| Type | Part no. | Std. pack | Type | Part no. | Std. pack | Type | Part no. | Std. pack |
|---|---|---|---|---|---|---|---|---|
| 9018 D | Z5.516.2511.0 | 50 | 9018 H | Z5.516.2711.0 | 50 | 9018 N | Z5.516.2811.0 | 50 |

Included with these angled support brackets are oval head screws for panel mounting AM 5 x 8 DIN 85, nuts BM 5 DIN 439 and screws 5.3 DIN 433 for DIN rail mounting.

Material:
Brackets: flat steel, galvanically zinc-plated
Screws, nuts and washers
Steel, galvanically zinc-plated and dichromated

# Accessories for DIN rail terminal blocks

selos

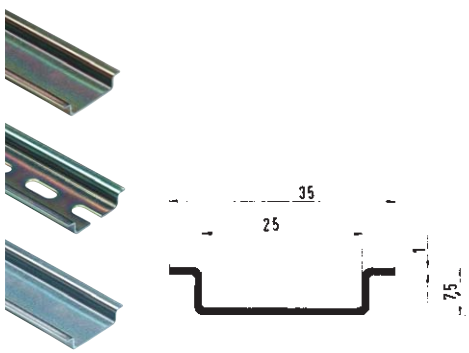


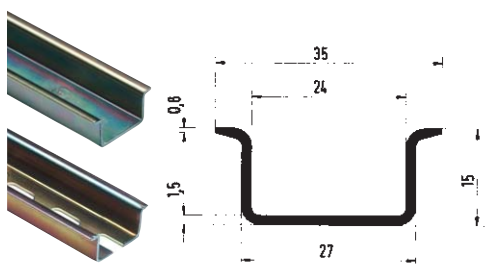


| | Mounting rail 35 x 7.5 accord. to DIN EN 60715 | | | Mounting rail 35 x 15 accord. to DIN EN 60715 | | |
|---|---|---|---|---|---|---|
| | Type | Part no. | Std. pack | Type | Part no. | Std. pack |
| **Mounting rail** | | | | | | |
| | | | | | | |
| 1. Steel, galv. zinc-plated and dichromated,unslottedL = 2 m | 35 x 27 x 7,5 EN 60715 | 98.300.0000.0 | 1 | 35 x 27 x 15 EN 60715 | 98.370.0000.0 | 1 |
| Steel, galv. zinc-plated and dichromated,slotted L = 2 m | 35 x 27 x 7,5 EN 60715 slotted | 98.300.1000.0 | 1 | 35 x 27 x 15 EN 60715 | 98.370.1000.0 | 1 |
| Steel,galv. zinc-plated and dichromated, slotted L = 1 m | 35 x 27 x 7.5 EN 60715 slotted | 98.300.1000.0M | | 35 x 27 x 15 EN 60715 | 98.375.1000.0 | 1 |
| Steel,galv. zinc-plated and dichromated, slotted L = 2 m | 35 x 27 x 7.5 EN 60715 slotted | 98.300.1000.0L | | | | |
| 2. Steel, unplated unslotted L = 2 m | 35 x 27 x 7,5 EN 60715 unplated | 98.300.0010.0 | | | | |
| Steel, unplated slotted L = 2 m | | | | | | |
| 3. Steel, hot-galvanized unslotted L = 2 m | | | | | | |
| Steel, hot-galvanized slotted L = 2 m | | | | | | |
| 4. E copper unslotted L = 2 m | | | | | | |
| E copper slotted L = 2 m | | | | | | |
| 5. Aluminum unslotted L = 2 m | 35 x 27 x 7.5 EN 60715 | 98.750.0000.0 | | | | |
| Aluminum slottted L = 1 m | 35 x 27 x 7.5 EN 60715 | 98.800.1000.0 | | | | |
| 6. Stainless Steel unslotted L = 2 m | 35 x 27 x 7.5 EN 60715 | 98.330.0000.0 | | 35 x 27 x 15 EN 60715 | 98.370.1001.0 | 1 |

# selos



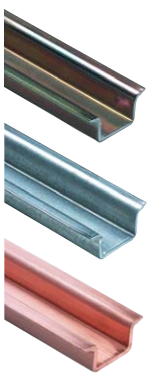

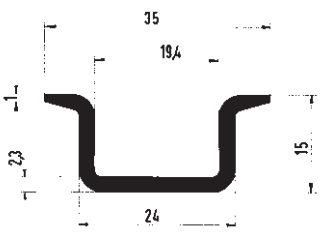

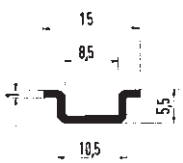


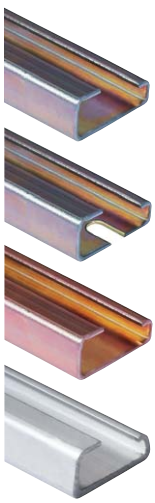

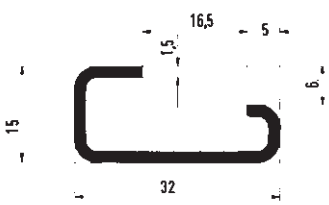


## Mounting rail 35 x 15
accord. to DIN EN 60715

| Type | Part no. | Std. pack |
|---|---|---|
| 35 x 27 x 15 EN 60715 | 98.360.0000.0 | 1 |
| 35 x 24 x 15 EN 60715 ZN | 98.360.0004.0 | 1 |
| 35 x 24 x 15 EN 60715 CU | 98.380.0000.0 | 10 |

## Mounting rail 15 x 5.5
accord. to DIN EN 60715

| Type | Part no. | Std. pack |
|---|---|---|
| 9021/15 x 5,5 EN 60715 | 98.090.0000.0 | 1 |
| 9021/15 x 5,5 EN 60715 | 98.090.0015.0 | 10 |

## Mounting rail TS 32
accord. to DIN EN 60715

| Type | Part no. | Std. pack |
|---|---|---|
| 9006 EN 60715 G-32 | 98.190.0000.0 | 1 |
| 9006 EN 60715 G-32 | 98.190.1000.0 | 1 |
| 9006 E-CU | 98.220.0000.0 | 10 |
| 9006 AL | 98.210.0000.0 | 1 |

# Accessories for DIN rail terminal blocks

selos

**End clamp for TS 35**
fixation with screws

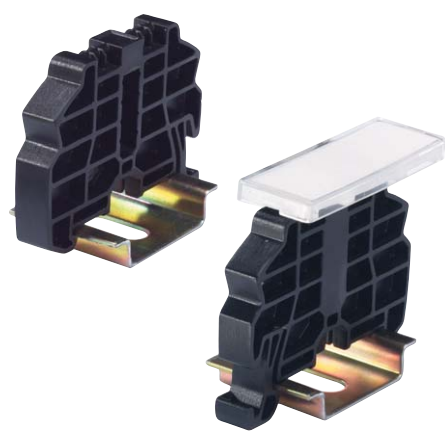

**End clamp for TS 35**
fixation without screws

| | | Type | Part no. | Std. pack | Type | Part no. | Std. pack |
|---|---|---|---|---|---|---|---|
| **End clamp** | | | | | | | |
| 1. End clamp TS 35, with screw | 8 mm wide | 9708/2 S 35 | Z5.522.8553.0 | 100 | | | |
| 2. End clamp TS 35, with screw with marking facilities for block assemblies | 8/17.5 mm wide | 9708/2 BS/35 | 69.920.0553.0 | 100 | | | |
| 3. End clamp for TS 35, screwless | 8 mm wide | | | | WEF 1/35 | Z5.523.9353.0 | 100 |
| 4. End clamp for TS 35, screwless with marking facilities for terminal block assemblies | 8/17.5 mm wide | | | | WEF 1 BS/35 | 69.920.1053.0 | 100 |
| 5. End clamp TS 35 | 7.5 mm wide | | | | | | |
| 6. End clamp with U-foot | 10 mm wide | | | | | | |

# selos

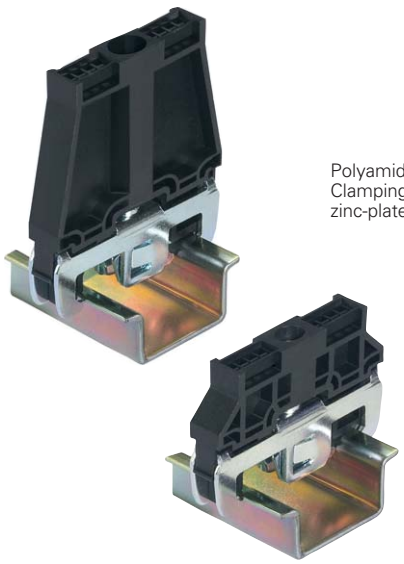

Polyamide 66/6
Clamping spring
zinc-plated steel

Polyamide 66/6
Clamping spring
zinc-plated steel

## End clamp for TS 35

| Type | Part no. | Std. pack |
|---|---|---|
| 9708/3 S 35 | Z5.523.5153.0 | 100 |

## End clamp with U-foot

| Type | Part no. | Std. pack |
|---|---|---|
| WE 2/U | Z5.523.5653.0 | 100 |
| WE 1/U | Z5.523.5753.0 | 100 |

## End clamp for TS 15

| Type | Part no. | Std. pack |
|---|---|---|
| 9208/S15 | Z5.522.7553.0 | 100 |

# Accessories
# for DIN rail terminal blocks
# selos

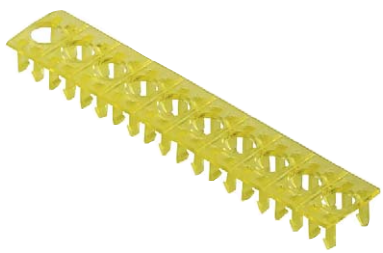

| Cover over 10 blocks | | | Cover over 10 blocks<br>Hole for test pin | | | Cover strip with warning symbol<br>over 4 blocks | | |
|---|---|---|---|---|---|---|---|---|
| | | | Type | Part no. | Std. pack | Type | Part no. | Std. pack |
| **WK 2,5/U** | | | **WK 2,5/U** | | | **WK 2,5/U** | 04.343.4756.8 | 10 |
| **WK 2,5-4 KOI/U...** | | | **WK 2,5-4 KO I/4** | | | | | |
| AD VB 5/10 E GELB | 04.342.0556.8 | 10 | AD VB 5/10 P GELB | 04.342.3556.8 | 10 | | | |
| | | | | | | **WK 4/U** | 04.343.4856.8 | 10 |
| | | | | | | | | |
| **WK 4/U** | | | **WK 4** | | | | | |
| AD VB 6/10 | 04.342.0656.8 | 10 | AD VB 6/10 P GELB | 04.342.3656.8 | 10 | **WK 6/U** | 04.343.4956.8 | 10 |
| | | | | | | | | |
| | | | | | | | | |
| **WK 10/U** | | | **WK 4 E/U** | | | **WKN 10/U** | 04.343.5056.8 | 10 |
| AD VB 10/10 GELB | 04.342.1056.8 | 10 | AD VB 6/10 EP GELB | 04.342.5656.8 | 10 | | | |
| | | | | | | | | |
| | | | | | | **WKN 16/U** | 04.343.5156.8 | 10 |
| **WK 4 E/U** | | | **WK 6/U** | | | | | |
| AD VB 6/10 E GELB | 04.342.2656.8 | 10 | AD VB 8/10 P GELB | 04.342.3856.8 | 10 | | | |
| | | | | | | **WKN 35/U** | 04.343.5256.8 | 10 |
| | | | | | | | | |
| | | | **WK 10/U** | | | | | |
| | | | AD VB 10/10 P GELB | 04.342.4056.8 | 10 | **WKN 70/U** | 04.343.5356.8 | 10 |
| | | | | | | | | |
| | | | | | | | | |
| | | | **WK 5... S/U** | | | **WKN 150/U** | 04.343.5456.8 | 10 |
| | | | **WK/3 S/..** | | | | | |
| | | | **WK/4 S/..** | | | | | |
| | | | **WK 4 3..** | | | | | |
| | | | AD VB 6/10 P GELB | 04.342.3656.8 | 10 | | | |

# selos

## Cover

for terminals from 95 - 240 mm²

| Type | Part no. | Std. pack |
|---|---|---|
| for terminal block type | | |
| | | |
| **RFK 1/185** | Z7.409.5853.0 | 10 |
| **RFK 1/240** | Z7.409.5853.0 | 10 |

## Rapid mounting tool

for terminals up to 6 mm²

| Type | Part no. | Std. pack |
|---|---|---|
| for terminal block type | | |
| | | |
| **WK 2,5** | 05.594.5853.0 | 10 |
| | | |
| | | |
| **WK 4** | 05.594.5953.0 | 10 |
| | | |
| | | |
| **WK 6** | 05.594.6053.0 | 10 |
| | | |
| | | |
| **WK 4 E/U** | 05.582.8153.0 | 10 |
| | | |
| Tool picks up and mounts 10 terminals at a time. | | |
| Mount 100 terminals in 90 seconds. | | |

## Insulating housing for push-on connector

6.3 x 0.8 mm

| Type | Part no. | Std. pack |
|---|---|---|
| Insulating housing for push-on connectors, color: yellow | | |
| with marking field | | |
| | | |
| for 1.5 mm² | 05.592.7553.0 | 2000 |
| for 2.5 mm² | 05.592.7653.0 | 2000 |
| | | |
| | | |
| | | |
| | | |
| | | |
| Insulating housing for push-on connectors, color: yellow | | |
| for 2.5 mm² (can be inserted on the plug side) | | |
| | | |
| unmarked | 05.582.8653.0 | 1 |
| marked | 05.582.8753.0 | |
| | | |
| (please indicate the marking) | | |

# Accessories
# for DIN rail terminal blocks

selos

## Test plug stud bolt

| | | | |
|---|---|---|---|
| Test socket | | | |
| **WK 2,5** | | | |
| **WKN 2,5 E/U** | | | |
| **WK 2,5-3 D/U** | | | |
| **WK 4 TKMP 3/U** | | | |
| **WK 4 TKG-TRST P3/U** | | | |
| **WK 4 TKS D/U** | | | |
| **WK 2,5 U/8113 S/H** | | | |
| **WK 4/U F1** | | | |
| **WK 4/U F2** | | | |
| **WK 4** | | | |
| **WK 4/D1/2 U** | | | |
| **WK 4/D2/2 U** | | | |
| **WK 4/DEU** | | | |
| **WK 4 E.../U** | | | |
| **9290...** | ST 2/2,3 | Z5.553.2921.0 | 10 |
| **WK6** | ST 2/4 | Z5.553.3021.0 | 10 |
| | | | |
| Test socket | | | |
| **WK 2,5** | | | |
| **WKN 2,5 E/U** | | | |
| **WK 2,5-3 D/U** | | | |
| **WK 2,5-3 D SL** | | | |
| **WK 2,5 U/8113 S/H** | | 05.509.6021.0 | 10 |
| **WK 4** | | | |
| **WK 4 TKS D/U** | | | |
| **WK 4/U F1** | | | |
| **WK 4/U F2** | | 05.508.8921.0 | 10 |
| **WK 4/D1/2 U** | | | |
| **WK 4/D2/2 U** | | | |
| **WK 4/DEU** | | | |
| **WK 4 E.../U** | | 05.508.8821.0 | 10 |

## Shorting plug

| Type | Part no. | Std. pack |
|---|---|---|
| Shorting plug | | |
| **WK 4 TKG-TRST P3/U** | | |
| **WK 4/TKM.../U** | | |
| **WK 4 TKS D/U** | | |
| **WK 4/U F1** | | |
| **WK 4/U F2** | | |
| **9290...** | Z5.553.9400.0 | 100 |

## Test plug (tests off the current bar)

| Type | Part no. | Std. pack |
|---|---|---|
| snap-on with | | |
| locking lever | | |
| for terminal block type | | |
| | | |
| **WK 4** | Z1.299.6153.0 | 10 |
| | | |
| **WK 4 E/U** | Z1.299.9053.0 | 10 |
| Test plug without locking lever | | |
| snap-on | | |
| | Z1.299.8153.0 | 10 |

For marking systems see pages 178-179 and 200-202

# selos

## Test plug (test off the screw)

for WK 4 terminal blocks

with locking device and strain relief I

$I_{min}$ = 10 mA
$I_{max}$ = 3,5 A
$U_{min}$ = 10 V
$U_{max}$ = 250 V ~ 300 V⎓

## Test plug with spring clamp connection

for WKF/WKC terminal blocks

**PSWKC/F**

| | | V | A |
|---|---|---|---|
| Solid 0,13 - 1,5 mm² | fine stranded 0,13 - 1,5 mm² | 400 V | 2,5 |

| Type | Part no. | Std. pack |
|---|---|---|
| 1pole | | |
| without contact pin | Z1.299.9253.0 | 10 |
| | | |
| | | |
| 1pole | | |
| without contact pin | | |
| snap-on | Z1.299.9453.0 | 10 |
| | | |
| | | |
| 10pole without contact pins | | |
| with locking device and strain relief | | |
| marked 1 - 10 | | |
| PST 10 WK 4 | Z1.299.9553.0 | 10 |
| | | |
| | | |
| Contact pin | 05.549.1200.0 | 1 |
| | | |
| | | |
| | | |
| | | |
| | | |
| | | |
| | | |
| | | |
| | | |
| | | |
| | | |
| | | |
| | | |
| | | |
| For marking systems see pages 178-179 and 200-202 | | |

| Type | Part no. | Std. pack |
|---|---|---|
| 1pole | | |
| 5mm pitch | | |
| PSWKC/F | Z1.299.9753.0 | |
| | | |
| Blank for staggering terminals | | |
| blocks | 01.299.9753.0 | |
| | | |
| End plate and | | |
| partition for 6 mm pitch | | |
| ZP/AP PS | 07.312.6053.0 | 10 |
| | | |
| One end plate per module is required for 6 mm pitch | | |
| | | |
| | | |
| | | |
| | | |
| jumpered with | | |
| at RM5 | Z7.280.6227.0 | |
| | to | |
| | Z7.280.7027.0 | .. |
| | | |
| at RM6 | Z7.261.1227.0 | |
| | to | |
| | Z7.261.2027.0 | |
| | | |
| | | |
| | | |
| | | |
| | | |
| Screwdriver, | | |
| uninsulated | 06.502.4000.0 | |
| | | |
| | | |

# Marking accessories for DIN rail terminal blocks

**selos**

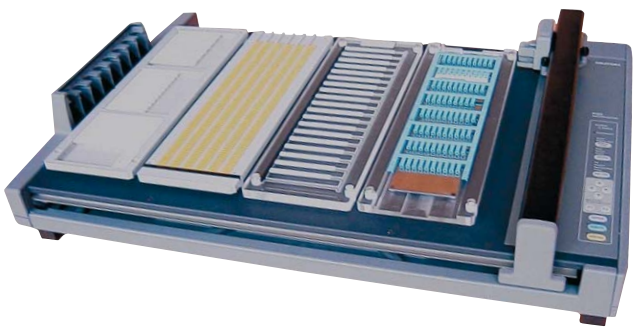

## *wiemarc*

| Type | Part no. | Std. pack |
|---|---|---|
| wiemarc CD | 95.502.0501.0 | |

**Discription**

***wiemarc*** is a Windows® based plotter software (Windows 95/98/ME/NT/XP) that is able to drive the following plotter systems:

– ***wieplot*** MUT (Mutoh system)
– Roland system
for custom printing on standard Wieland marking tags.

***wiemarc*** makes preparing data for custom printing easier and faster than ever.
Intuitive handling allows printing of marking tag cards in single, multipole and series marking jobs.
Import of marking data from Excel files, text files and CAD/CAE programs is possible.
***wiemarc*** data file management is user-friendly as printing data can be stored and found very easily in the file library.
***wiemarc*** knows several special characters for electrical marking.
***wiemarc*** is able to mark tags with upward or downward series, series steps can be chosen as well as leading or following characters. Multipole line printing is possible depending on tag size, number of digits and type size. Automatic adaptation of type size according to tag size and number of digits.

**Requirements:**
Pentium II PC or compatible, min. 200 MHz or higher, 64 MByte RAM, CD-ROM Drive, VGA Grafic Adaptor and Monitor

***wiemarc*** supports Windows 95®, Windows 98®, Windows 2000®, Windows NT®, Windows ME® and Windows XP® Professional.

## *wieplot* MUT

**Description**

***wieplot*** MUT is a plotter system that uses ***wiemarc*** to interface with a PC, allowing custom printing on standard Wieland marking tags. These standard marking tags provide circuit identification for Wieland DIN rail mount terminal blocks, rectangular multipole connectors and WEB/WEG electronic housings.

| | |
|---|---|
| **Resolution:** | 0.025 mm |
| **Accuracy:** | +/- 0.1 mm |
| **Power supply:** | 50/60 Hz, 180 – 264 V, 90 – 132 V<br>Automatic switch over from 110 V to 230 V |
| **Power rating:** | About 0.3 A for 220 V |
| **Approvals:** | UL-UL478 (REV .4)<br>CSA-22.2 No. 220 and VDE EN 60 950 |
| **Interference:** | FCC Class B<br>FCC Part 15 and VDE Class B |
| **Dimensions:** | 620 mm x 425 mm x 106.5 mm |
| **Weight:** | 6.4 kg |
| **Interfaces:** | RS-232 C and parallel (Centronics) |

| Type | Part no. | Std. pack |
|---|---|---|
| wieplot MUT | 95.502.0601.0 | |
| Standard template for all Wieland tags | 95.502.0621.0 | |

# selos



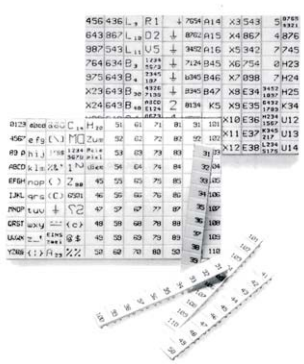

## Accessories

| | Type | Part no. | Std. pack |
|---|---|---|---|
| **Accessory kit** consists of plotter pen 0.25 mm, | | | |
| Ink-cartridge, permanent plotter pen 0.3 mm and | | | |
| cleaning set. | | | |
| Accessory kit (pen basic equipment) | | 95.502.0602.0 | |
| | | | |
| **Plotter pens for ROLAND and *wieplot*** MUT | | | |
| **systems:** | | | |
| Plotter pen 0.18 mm | | 95.502.0118.0 | |
| Plotter pen 0.25 mm | | 95.502.0125.0 | |
| Plotter pen 0.35 mm | | 95.502.0135.0 | |
| Plotter pen 0.50 mm | | 95.502.0150.0 | |
| Plotter pen 0.70 mm | | 95.502.0170.0 | |
| Plotter pen 1.00 mm | | 95.502.0100.0 | |
| | | | |
| **Permanent Plotter pen** | | | |
| 0.30 mm black | | 95.502.0230.0 | |
| 0.70 mm black | | 95.502.0270.0 | |
| | | | |
| **Permanent Plotter pen set** | | | |
| consisting of black, red, blue, green pen. | | | |
| set 0.30 mm | | 95.502.0234.0 | |
| set 0.70 mm | | 95.502.0274.0 | |
| | | | |
| **Hand pens** | | | |
| Hand pen 0.25 mm | | 95.502.0425.0 | |
| Hand pen 0.35 mm | | 95.502.0435.0 | |
| Hand pen 0.50 mm | | 95.502.0450.0 | |
| Hand pen 0.70 mm | | 95.502.0470.0 | |
| Ink cartridge P1.0 5 x 1 ml | | 95.502.0199.0 | |
| Cleaning set | | 95.502.0198.0 | |
| Pen cleaner | | 95.502.0197.0 | |
| | | | |
| ***wiemarc*-Templates for Wieland cards:** | | | |
| for updating existing plotter systems to ***wiemarc*** | | | |
| for ***marcom* 2000** and Phoenix CMS-System | | 95.502.0621.0 | |
| for Weidmueller M-Print (Mutoh IP 220) | | 95.502.0622.0 | |
| for murrplastic ACS (Roland DXY1150A) set high | | 95.502.0623.0 | |
| for Wago System and murrplastic ACS set low | | 95.502.0624.0 | |

| Type | Part no. | Std. pack |
|---|---|---|
| **Marker Cards:** | | |
| 110 tags per card | | |
| 9075 A/5/10/11 | Z4.242.5053.0 | |
| 60 tags per card | | |
| 9705 AL/5/10/6 | Z4.242.5153.0 | |
| 110 tags per card | | |
| 9705 A/6/10/11 | Z4.242.6053.0 | |
| 60 tags per card | | |
| 9705 AL/6/10/6 | Z4.242.6153.0 | |
| 84 tags per card | | |
| 9705 A/6.7/12/7 | Z4.242.6753.0* | |
| 36 tags per card | | |
| 9705 AL/6.7/12/7 | Z4.242.6853.0* | |
| *must use multi-card template | | |
| 9705 A/8/10/7 | Z4.242.8053.0* | |

| | 9075A/ 5/10/11 | 9075AL/ 5/10/6 | 9075A/ 6/10/11 | 9075AL/ 6/10/6 | 9075A/ 6.7/12/7 | 9075AL/ 6.7/12/7 | 9075A/ 8/10/7 |
|---|---|---|---|---|---|---|---|
| ***fasis*** | | | | | | | |
| WKF 2.5 ... | X | X | | | | | |
| WKF 4 ... | | | X | X | | | |
| WKF 6 ... | | | | | X | X* | X |
| WKF 10 ... | X* | X* | | | | | |
| WKF 16 ... | | | X* | X* | | | |
| WKMF 2.5 ... | X | X | | | | | |
| ***taris*** | | | | | | | |
| WKC 1 ... | X | X | | | | | |
| WKC 2.5 ... | | | X | X | | | |
| ***selos*** | | | | | | | |
| WK 2.5 ... | X | X | | | | | |
| WK 4 ... | | | X | X | | | |
| WK 6 ... | | | | | X+ | X+ | X |
| WKN 10 ... | X* | X* | | | | | |
| WKN 16 ... | | | X* | X* | | | |
| WKN 35 ... | | | | | X+ | X+ | X* |
| WKN 70 ... | | | | | X+ | X+ | |
| WKM 2.5 ... | X | X | | | | | |
| WKM 4 ... | | | X | X | | | |
| 9220 A/6 | | | X | X | | | |
| 9700 A/5 | X | X | | | | | |
| 9700 A/6 | | | X | X | | | |
| 9700 A/8 | | | | | X+ | X+ | X |
| 9700 A/10 | X* | X* | | | | | |
| 9700 A/12 | | | X* | X* | | | |
| 9700 A/16 | | | | | X+ | X+ | |

* 2 strips needed for 10 terminals
\+ markers must be mounted individually
**Note:** the AL-markers are 69% longer that the A-markers AL/6.7 is twice as long to allow more printing area

# selos

## 2.5 mm²/5 mm Width

| Type | | Part no. | Std. pack |
|---|---|---|---|
| **Marking strips, unmarked** | | | |
| 9705 A/5/10 | | 04.242.5053.0 | 25 |
| | | | |
| **Marking strips, marked** | | | |
| 9705 A/5/9 B | 1 - 9 | 04.842.4953.0 | 25 |
| 9705 A/5/10 B* | | 04.842.5053.0 | 25 |
| 9705 A/5/10 B | 1 - 10 | 04.845.0153.0 | 25 |
| | 11 - 20 | 04.845.0253.0 | 25 |
| | 21 - 30 | 04.845.0353.0 | 25 |
| | 31 - 40 | 04.845.0453.0 | 25 |
| | 41 - 50 | 04.845.0553.0 | 25 |
| | 51 - 60 | 04.845.0653.0 | 25 |
| | 61 - 70 | 04.845.0753.0 | 25 |
| | 71 - 80 | 04.845.0853.0 | 25 |
| | 81 - 90 | 04.845.0953.0 | 25 |
| | 91 - 100 | 04.845.1053.0 | 25 |
| | | | |
| | ⏚ (10 x) | 04.855.0053.0 | 25 |
| | ⏚ (10 x) | 04.855.0153.0 | 25 |
| | + (10 x) | 04.855.0253.0 | 25 |
| | – (10 x) | 04.855.0353.0 | 25 |
| | L1 (10 x) | 04.855.0453.0 | 25 |
| | L2 (10 x) | 04.855.0553.0 | 25 |
| | L3 (10 x) | 04.855.0653.0 | 25 |
| | PE (10 x) | 04.855.0753.0 | 25 |
| | SL (10 x) | 04.855.3153.0 | 25 |
| | N (10 x) | 04.855.3253.0 | 25 |
| | F1 (10 x) | 04.855.0953.0 | 25 |
| | F2 (10 x) | 04.855.1053.0 | 25 |
| L1, L2, L3, N, PE | (2 x) | 04.855.0853.0 | 25 |
| | | | |
| with enlarged marking area | | | |
| 9705 AL/5/10 | | 04.242.5153.0 | 25 |
| *Custom marking upon request | | | |

## 4 mm²/6 mm Width

| Type | | Part no. | Std. pack |
|---|---|---|---|
| **Marking strips, unmarked** | | | |
| 9705 A/6/10 | | 04.242.6053.0 | 25 |
| | | | |
| **Marking strips, marked** | | | |
| 9705 A/6/9 B | 1 - 9 | 04.842.5953.0 | 25 |
| 9705 A/6/10 B* | | 04.842.6053.0 | 25 |
| 9705 A/6/10 B | 1 - 10 | 04.846.0153.0 | 25 |
| | 11 - 20 | 04.846.0253.0 | 25 |
| | 21 - 30 | 04.846.0353.0 | 25 |
| | 31 - 40 | 04.846.0453.0 | 25 |
| | 41 - 50 | 04.846.0553.0 | 25 |
| | 51 - 60 | 04.846.0653.0 | 25 |
| | 61 - 70 | 04.846.0753.0 | 25 |
| | 71 - 80 | 04.846.0853.0 | 25 |
| | 81 - 90 | 04.846.0953.0 | 25 |
| | 91 - 100 | 04.846.1053.0 | 25 |
| | | | |
| | ⏚ (10 x) | 04.856.0053.0 | 25 |
| | ⏚ (10 x) | 04.856.0153.0 | 25 |
| | + (10 x) | 04.856.0253.0 | 25 |
| | – (10 x) | 04.856.0353.0 | 25 |
| | L1 (10 x) | 04.856.0453.0 | 25 |
| | L2 (10 x) | 04.856.0553.0 | 25 |
| | L3 (10 x) | 04.856.0653.0 | 25 |
| | PE (10 x) | 04.856.0753.0 | 25 |
| | SL (10 x) | 04.856.3153.0 | 25 |
| | N (10 x) | 04.856.3253.0 | 25 |
| | F1 (10 x) | 04.856.0953.0 | 25 |
| | F2 (10 x) | 04.856.1053.0 | 25 |
| L1, L2, L3, N, PE | (2 x) | 04.856.0853.0 | 25 |
| | | | |
| with enlarged marking area | | | |
| 9705 AL/6/10 | | 04.242.6353.0 | 25 |
| *Custom marking upon request | | | |

## 10 mm²/10 mm Width

## 16 mm²/12 mm Width

## 35 mm²/16 mm Width

| Type | Part no. | Std. pack |
|---|---|---|
| **10 mm²/10 mm Width** | | |
| **marked for 5 blocks (every 2nd tag) *** | | |
| 9705 A/5/10/5 B | 04.842.5553.0 | 25 |
| **16 mm²/12 mm Width** | | |
| **marked for 5 blocks (every 2nd tag) *** | | |
| 9705 A/6/10/5 B | 04.842.6553.0 | 25 |
| **35 mm²/16 mm Width** | | |
| **marked for 5 blocks (every 2nd tag) *** | | |
| 9705 A/8/10/5 B | 04.842.8553.0 | 25 |
| * indicate required marking with part no. | | |

# Marking accessories for DIN rail terminal blocks

selos



## Tear-off marking strip with 10 marking tags

| Material: Polyamide 66/6 white, marking in black Marking per strip | | Type | Part no. | Stand. pack |
|---|---|---|---|---|
| unmarked | | 9704 A | 04.241.1150.0 | 25 |
| marked with the same number | 1 1 1 1 1 1 1 1 1 1 | 9704 A/1 B | 04.841.1150.0 | 25 |
| | 2 2 2 2 2 2 2 2 2 2 | 9704 A/2 B | 04.841.1250.0 | 25 |
| | 3 3 3 3 3 3 3 3 3 3 | 9704 A/3 B | 04.841.1350.0 | 25 |
| | 4 4 4 4 4 4 4 4 4 4 | 9704 A/4 B | 04.841.1450.0 | 25 |
| | 5 5 5 5 5 5 5 5 5 5 | 9704 A/5 B | 04.841.1550.0 | 25 |
| | 6 6 6 6 6 6 6 6 6 6 | 9704 A/6 B | 04.841.1650.0 | 25 |
| | 7 7 7 7 7 7 7 7 7 7 | 9704 A/7 B | 04.841.1750.0 | 25 |
| | 8 8 8 8 8 8 8 8 8 8 | 9704 A/8 B | 04.841.1850.0 | 25 |
| | 9 9 9 9 9 9 9 9 9 9 | 9704 A/9 B | 04.841.1950.0 | 25 |
| | 0 0 0 0 0 0 0 0 0 0 | 9704 A/0 B | 04.841.2050.0 | 25 |
| marked with consecutive numbers | 1 2 3 4 5 6 7 8 9 0 | 9704 A/1-0 B | 04.841.2150.0 | 25 |
| marked with the same symbols | + + + + + + + + + + | 9704 A/+ B | 04.841.7450.0 | 25 |
| | – – – – – – – – – – | 9704 A/– B | 04.841.7550.0 | 25 |
| | / / / / / / / / / / | 9704 A// B | 04.841.7650.0 | 25 |
| | . . . . . . . . . . | 9704 A/. B | 04.841.7750.0 | 25 |
| 1 set of the same numbers = 10 x 25 strips = 2500 numbers | 1 1 1 ... 0 0 0 | A to Z (capital letters) | 04.841.9050.0 | 1 |
| 1 set of capital letters = 26 x 25 strips = 6500 letters | A A A ... Z Z Z | a to z (small letters) | 04.841.9150.0 | 1 |
| 1 set of small letters = 26 x 25 strips = 6500 letters | a a a ... z z z | | 04.841.9250.0 | 1 |

# Marking Accessories
# for DIN rail terminal blocks

selos

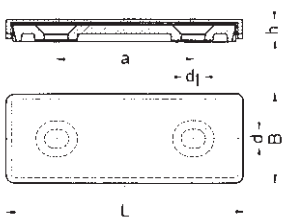

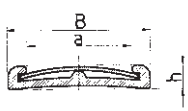


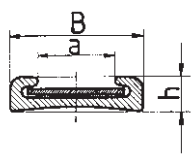


## Marking tags

The marking tags are delivered unassembled!

| Type | Part no. | Std. pack |
|---|---|---|
| Version N: | | |
| Material: | | |
| special photostable plastic, | | |
| transparent, marking card in white | | |
| | | |
| 300 B | 90.100.1154.0 | 100 |
| 300 | 90.100.0554.0 | 100 |
| 301 | 90.100.0754.0 | 100 |
| 303 | 90.100.0854.0 | 100 |
| 305 | 90.100.1054.0 | 100 |
| | | |
| | | |
| Version K: | | |
| Marking cards in perforated | | |
| sheets for marking on the | | |
| type writer | | |
| | | |
| 300 BK | 90.100.1354.0 | 100 |
| 300 K | 90.100.1254.0 | 100 |
| 301 K | 90.100.1454.0 | 100 |
| 303 K | 90.100.1554.0 | 100 |
| 305 K | 90.100.1654.0 | 100 |

| L | B | h | a | e | d | $d_1$ | $l_1$ | b |
|---|---|---|---|---|---|---|---|---|
| 30 | 17,5 | 4 | 11 | 3,6 | 4,6 | 27 | 14,5 | |
| 45 | 17,5 | 4 | 26 | 3,6 | 4,6 | 42 | 14,5 | |
| 60 | 30 | 7 | 36,5 | 3,6 | 4,6 | 54,5 | 24,5 | |
| 90 | 40 | 8 | 55 | 3,6 | 4,6 | 84 | 34 | |
| 140 | 55 | 8 | 100 | 3,6 | 4,6 | 134 | 49 | |

## Marking strip

| Type | Part no. | Std. pack |
|---|---|---|
| Available in Polyvinylchlorid (PVC) black and ivory, | | |
| 1 m long | | |
| with marking card (white) and plastic foil cover | | |
| or with plastic foil, one side roughened, white opaque | | |
| | | |
| 319/13,5 K elf. | 90.800.1055.8 | 10 |
| 319/17,5 K elf. | 90.800.2055.8 | 10 |
| | | |
| | | |
| 319/13,5 K schwarz | 90.800.1055.1 | 10 |
| 319/17,5 K schwarz | 90.800.2055.1 | 10 |

| L | B | h | a | e | d | $d_1$ | $l_1$ | b |
|---|---|---|---|---|---|---|---|---|
| 1000 | 20 | 4 | 13,5 | | | | | |
| 1000 | 24 | 4 | 17,5 | | | | | |
| 1000 | 30,5 | 4 | 23,5 | | | | | |
| 1000 | 20 | 4 | 13,5 | | | | | |
| 1000 | 24 | 4 | 17,5 | | | | | |
| 1000 | 30,5 | 4 | 23,5 | | | | | |

## Marking strip

| Type | Part no. | Std. pack |
|---|---|---|
| Available in Polyvinylchloride, | | |
| 1 m long | | |
| with marking card and plastic foil cover | | |
| | | |
| | | |
| 315 GK | 90.810.3055.0 | 10 |
| 315 GC | 90.811.3055.0 | 10 |
| | | |
| | | |
| | | |
| | | |
| End piece | | |
| 315 E | 05.590.0052.0 | 100 |

| L | B | h | a | e | d | $d_1$ | $l_1$ | b |
|---|---|---|---|---|---|---|---|---|
| 1000 | 16 | 4 | 9 | | | | | |
| 1000 | 16 | 4 | 9 | | | | | |

# selos

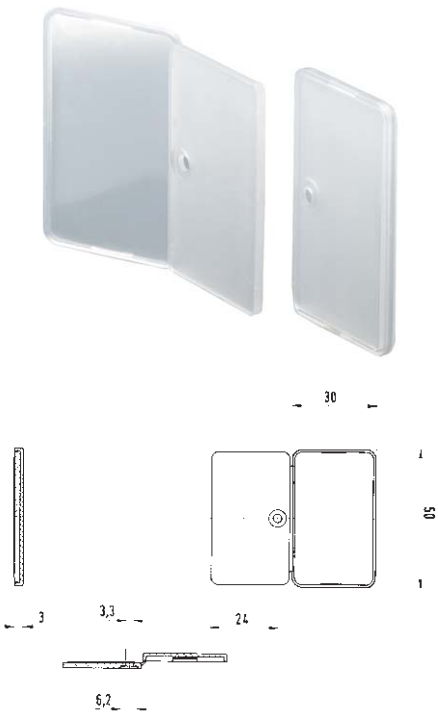


## Marking tag

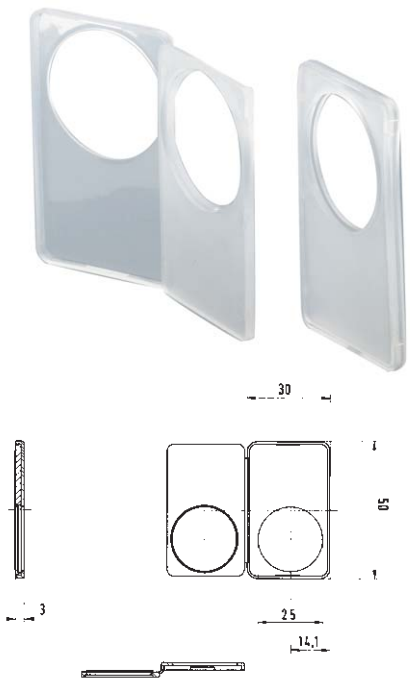


## Marking tag

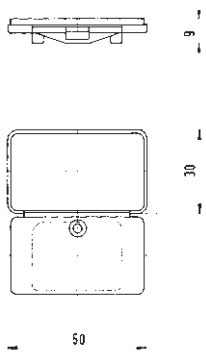


## Marking tag

| Design | Part no. | Std. pack |
|---|---|---|
| Marking tag | Z4.210.0652.0 | 100 |
| with adhesive tape | | |
| | | |
| | | |
| Marking tag | 04.210.0652.0 | 100 |
| without adhesive tape | | |
| | | |
| | | |
| Marking card | | |
| white for marking tags | | |
| (1 sheet = 30 single tags) | | |
| | 04.019.0889.0 | 1 |
| | | |
| | | |
| Aluminum | | |
| tag, self-adhesive | 05.584.9489.0 | 1 |

| Type | Part no. | Std. pack |
|---|---|---|
| Push button tag | 04.210.0752.0 | 100 |
| | | |
| | | |
| | | |
| | | |
| | | |
| | | |
| | | |
| Marking card | | |
| white for marking tags | | |
| (1 sheet = 30 single tags) | | |
| | 04.019.0889.0 | 1 |
| | | |
| | | |
| Aluminum | | |
| tag, self-adhesive | 05.584.9489.0 | 1 |

| Type | Part no. | Std. pack |
|---|---|---|
| Marking tag | Z4.210.1652.0 | 100 |
| with carrier | | |
| | | |
| | | |
| | | |
| | | |
| | | |
| | | |
| Marking card | | |
| white for marking tags | | |
| (1 sheet = 30 single tags) | | |
| | 04.019.0889.0 | 1 |
| | | |
| | | |
| Aluminum | | |
| tag, self-adhesive | 05.584.9489.0 | 1 |

# DIN rail terminal blocks with screw clamp technology, type *9700 A.. S35*

# selos CLASSIC LINE

## Standard terminal blocks

| | 2.5 mm² (12 AWG) | 4 mm² (10 AWG) |
|---|---|---|
| | | |
| Feed-through blocks | | 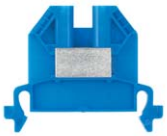 |
| Neutral disconnect blocks | | |
| Ground blocks | | |

| 10 mm² (8 AWG) | 16 mm² (6 AWG) | 25 mm² (4 AWG) | 35 mm² (2 AWG) |
|---|---|---|---|
| | | | |
| | | | |
| | | | |
| | | | |

## PEN assembly block

35 mm²

# DIN rail terminal blocks with screw clamp connection, type *9700 A.. S35*

# ***selos*** CLASSIC LINE

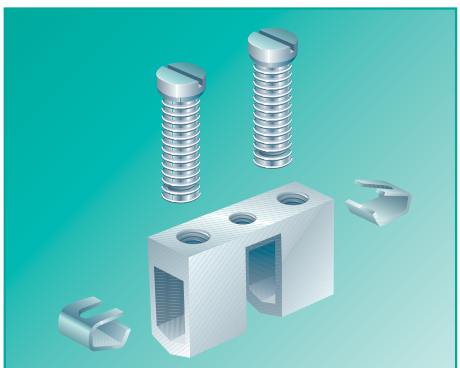

**9700 A S35 offers...**

❒ **Screw clamp technology**
made from nickel-plated copper alloy

**Application advantages**

→ Low contact resistance
– Clamping body has similar physical and chemical characteristics as the conductor
– One piece clamping body/current bar

→ **Connection of Aluminum Conductors**
– Clamping body is able to penetrate aluminium oxide

→ **Steel free Clamping Body**
– High corrosion resistance

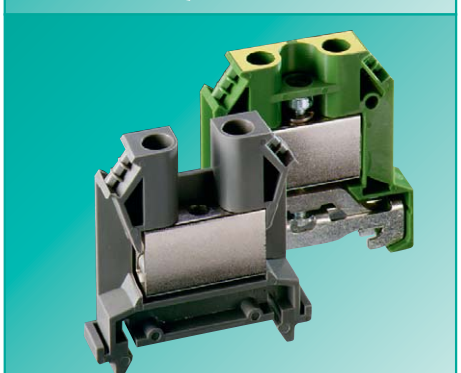

❒ Connection range
12-2 AWG

→ Wire gauge from 18-2 AWG solid, stranded and fine stranded conductors can be terminated without ferrules.

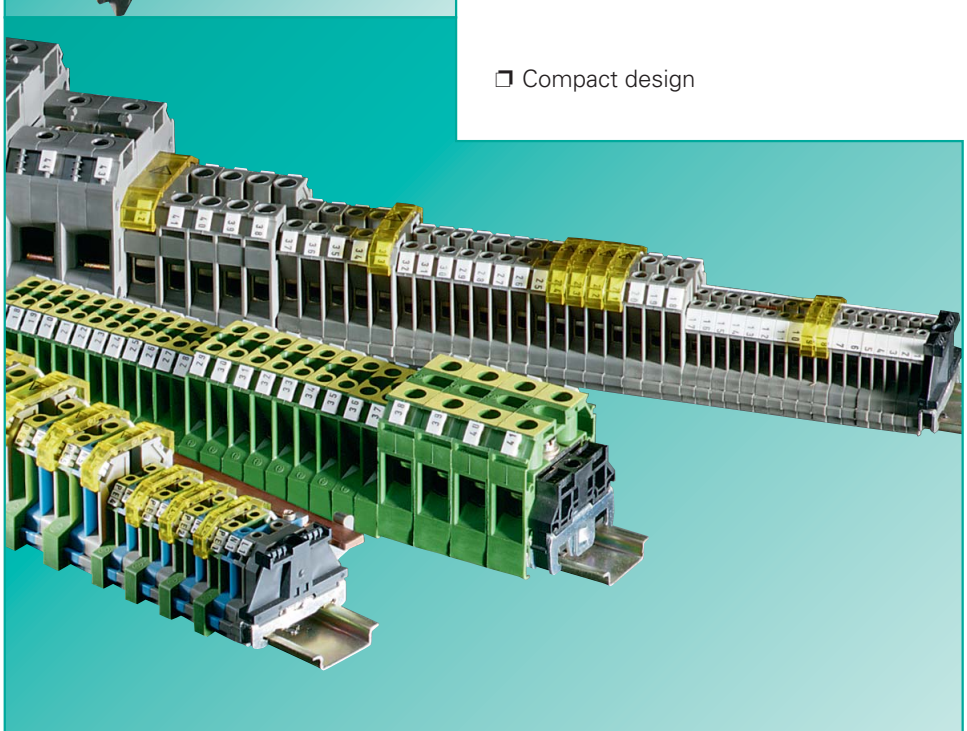

❒ Compact design

→ **Save space on the rail**
– ***selos*** Classic Line offers higher density due to the wire size and terminal block pitch.

| Connection range | Pitch |
|---|---|
| 12 AWG | 5 mm |
| 10 AWG | 6 mm |
| 8 AWG | 8 mm |
| 6 AWG | 10 mm |
| 4 AWG | 12 mm |
| 2 AWG | 16 mm |

→ ***selos*** CLASSIC LINE
– Mounting on TS 35 DIN Rail (DIN 60 715)
– Product range:
Feed-through terminals
Ground terminals
Neutral Bus terminals
PEN terminals

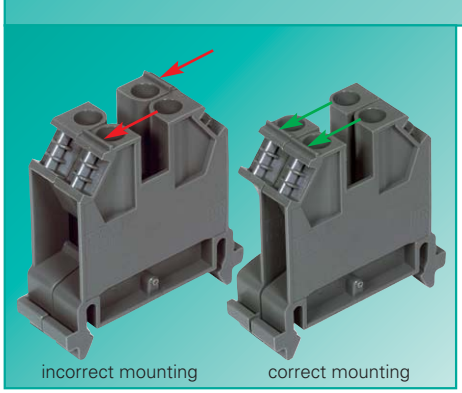


❒ **Function and Installation safety**

→ Incorrect mounting indicator on the top of terminal
– terminals mounted incorrectly are easily identified and fixed.

# selos



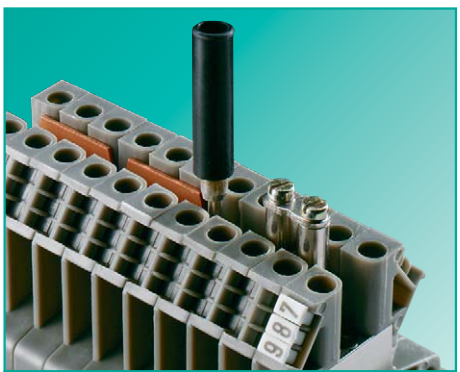

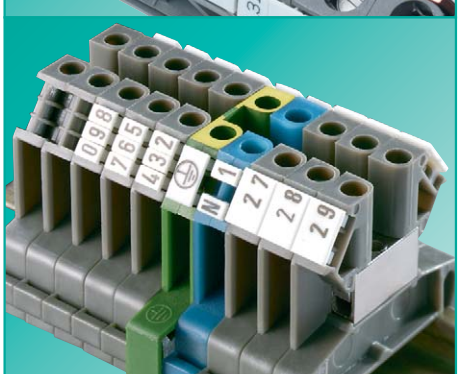

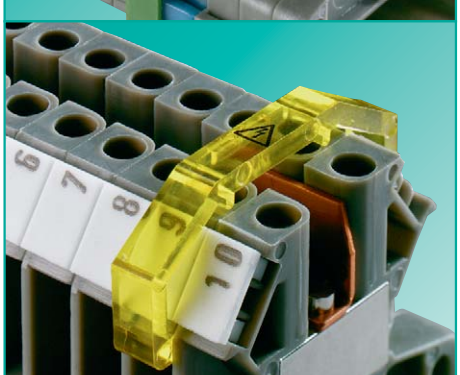

### Test plugs and shorting plugs

- ❒ Test sockets which accept the test plugs and the shorting plugs are installed in the threaded slot on the carrying bar.
- ❒ Modular test plugs are available to create test plug modules greater than two poles.

### Switchable connecting links (SCL)

- ❒ For easy commoning and disconnecting two terminals

### Jumper bar

- ❒ Allow easy commoning of potential
- ❒ Available in pre-cut 2-6 pole versions
- ❒ Available in cut to length version in 50, 70, or 90 pole versions depending on the terminal block
- ❒ End plates and partitions are required to mantain creepage distances.

### Marking systems

- ❒ Single marking tags in 5, 6, or 8mm pitch
- ❒ Marking strips (10 tags) to sanp on 10 terminals at the same time
- ❒ Tear-off marking strips for marking up to 3 digits per terminal block
- ❒ Custom marking available upon request

### Cover with warning symbol

- ❒ For terminals that remain live after the mains have been switched off (VDE 0113)
- ❒ Can be removed with a screwdriver

### DQS certificates for all company divisions

- ❒ Quality standard as per DIN ISO 9001 in Development, Production, Assembly
- ❒ Continued control of the quality standard by means of regular internal and external quality audits
- ❒ Compatible with certificates of other countries:
  - BSI Certificate, Great Britain
  - SQS Certificate, Switzerland
  - Aib-Vincotte Certificate, Belgium
  - ÖQS Certificate, Austria

### Material

❒ Metal components

Special alloys and surface treatments offer low contact resistance and a gas tight connection

| | |
|---|---|
| Clamping body: | nickel plated copper alloy |
| Screws: | nickel plated copper alloy |
| Jumper bar: | copper |
| Test socket: | copper alloy, plated |
| SCL: | copper alloy |

❒ Insulation housing

Polyamide has excellent electrical, chemical and mechanical characteristics

| | |
|---|---|
| Insulating housing: | Polyamide 66/6 |
| Tracking current resistance: | CTI 600 |
| Flammability class:: | UL 94 V-2 |

(also see section ***facts*** & DATA)

You can use our **wieplan** software to configure your own terminal block assemblies
(see page 10/11).

### Note:

The information regarding cross sectional area and connection types pertains to unprepared wires without ferrules.

The voltage ratings apply to the terminals in their intended application. When different products are mounted adjacent to each other, the proper isolation distances must be adhered to. **For this purpose, Wieland** offers a large selection of appropriate accessories.

A detailed description of technical data, the standards' requirements, and the application conditions can be found in part ***facts*** & DATA.

# DIN rail terminal blocks with screw technology, type 9700 A.. S35

## selos CLASSIC LINE

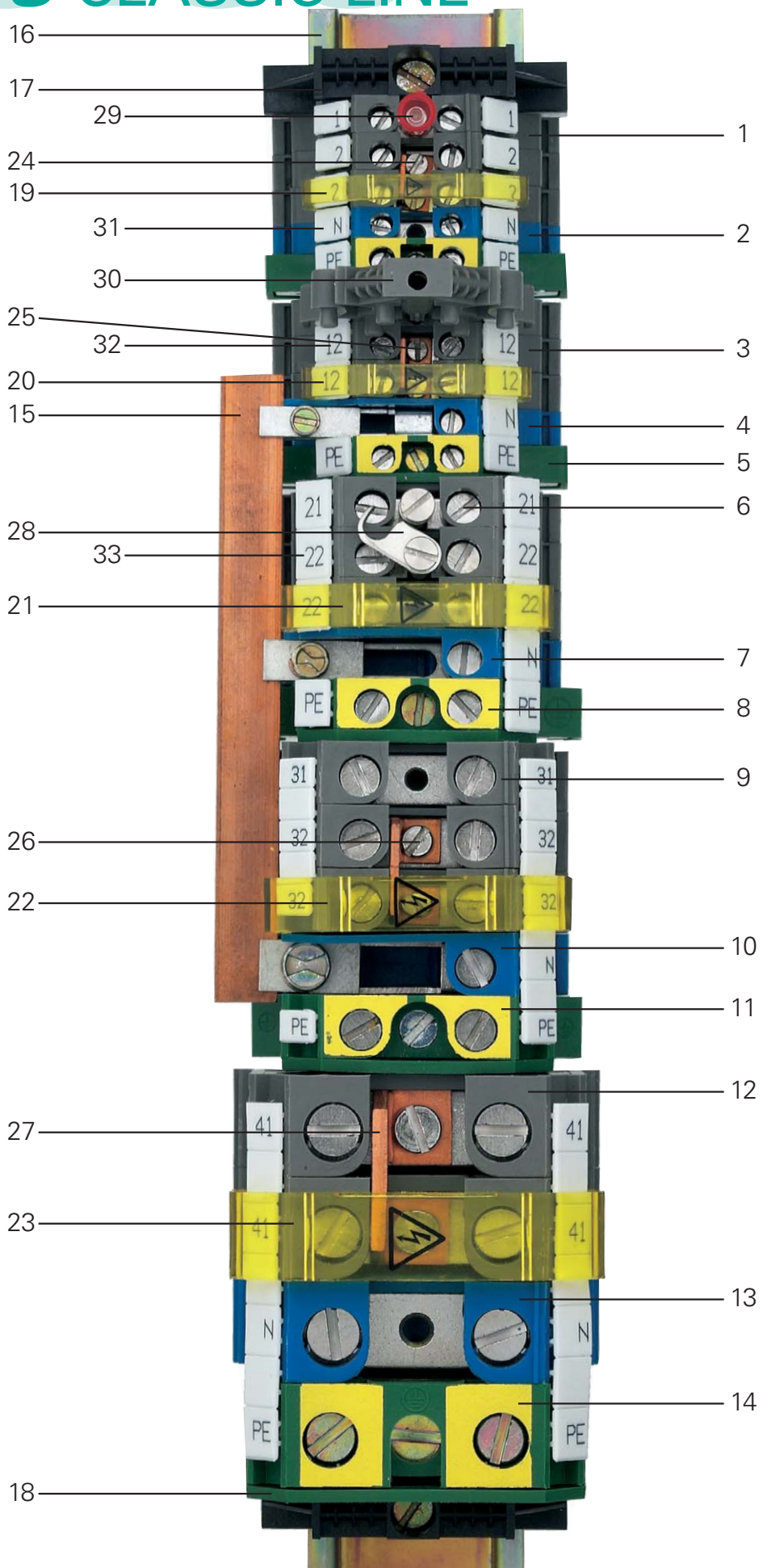

# selos

| Item | Description | Type | Part number |
|---|---|---|---|
| 1 | Feed through block | 9700 A/5 S35 | 54.003.7553.0 |
| 2 | Feed-through block, BLUE | 9700 A/5 S35 BLAU | 54.003.7553.6 |
| 3 | Feed through block | 9700 A/6 S35 | 54.004.7553.0 |
| 4 | Neutral disconnect block | 9700 A/6 ETK S35 | 54.004.7753.0 |
| 5 | Ground block | 9700 A/6 SL2 S35 | 56.004.9053.0 |
| 6 | Feed through block | 9700 A/8 S35 | 54.010.7553.0 |
| 7 | Neutral disconnect block | 9700 A/8 ETK S35 | 54.010.7753.0 |
| 8 | Ground block | 9700 A/8 SL2 S35 | 56.010.9053.0 |
| 9 | Feed through block | 9700 A/10 S35 | 54.016.7553.0 |
| 10 | Neutral disconnect block | 9700 A/10 ETK S35 | 54.016.7753.0 |
| 11 | Ground block | 9700 A/10 SL2 S35 | 56.016.9053.0 |
| 12 | Feed through block | 9700 A/16 S35 | 54.035.7553.0 |
| 13 | Feed-through block, BLUE | 9700 A/16 S35 BLAU | 54.035.7553.6 |
| 14 | Ground block | 9700 A/16 SL2 S35 | 56.035.9053.0 |
| 15 | Busbar 10 x 3 | 9813 M Sn | 98.290.1000.0 |
| 16 | Mounting rail | 35 x 27 x 7,5 | 98.300.0000.0 |
| 17 | End clamp for TS 35 with screw | 9708/2 S35 | Z5.522.8553.0 |
| 18 | End plate, GREEN | 9701/16 SL | 07.312.0353.0 |
| 19 | Warning cover | 2,5 $mm^2$ | 04.325.1656.0 |
| 20 | Warning cover | 4 $mm^2$ | 04.325.1056.0 |
| 21 | Warning cover | 10 $mm^2$ | 04.325.1156.0 |
| 22 | Warning cover | 16 $mm^2$ | 04.325.1256.0 |
| 23 | Warning cover | 35 $mm^2$ | 04.325.1456.0 |
| 24 | Cross connector with screws, uninsulated | 9703/5-2 | Z7.215.0227.0 |
| 25 | Cross connector with screws, uninsulated | 9703/6-2 | Z7.211.0227.0 |
| 26 | Cross connector with screws, uninsulated | 9703/10-2 | Z7.214.0227.0 |
| 27 | Cross connector with screws, uninsulated | 9703/16-2 | Z7.216.0227.0 |
| 28 | Switchable connecting link, complete | 10 $mm^2$ | Z7.269.3023.0 |
| 29 | Test plug with insulated handle, Ø 2.3 mm | ST 2/2,3 | Z5.553.2921.0 |
| | Stud bolt | 2,5 $mm^2$ | 05.508.8921.0 |
| 30 | Test plug with locking lever | | Z1.299.7153.0 |
| 31 | Marking tag | 9705 A | 04.842.0850.0 |
| 32 | Marking strip | 9705 A/6/10 B | 04.842.6053.0 |
| 33 | Marking strip | 9705 A/8/10 B | 04.842.8053.0 |

# Feed-through blocks
# with screw connection, type *9700 A.. S35*

**selos** CLASSIC LINE

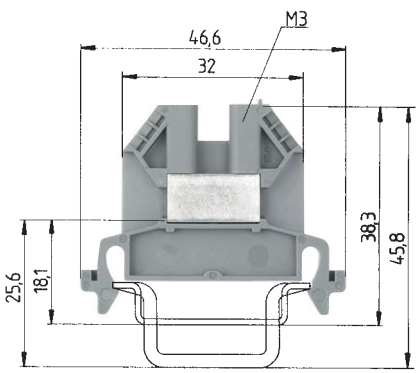


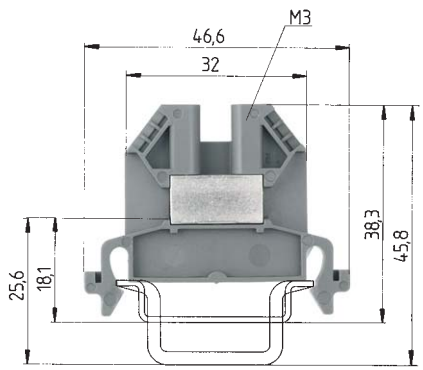


| | | 9700 A/5 S35 | | | | 9700 A/6 S35 | | | |
|---|---|---|---|---|---|---|---|---|---|
| | | fine stranded | solid | V | A | fine stranded | solid | V | A |
| DIN VDE 0611 Teil 3/11.98 | | 0.5 – 2.5 mm² | 0.5 – 4 mm² | 800 V/8 kV/3 | 24 | 0.5 – 4 mm² | 0.5 – 6 mm² | 800 V/8 kV/3 | 32 |
| UL-ratings | field/factory wiring | No. 18-12 | AWG | 600 V | 20/30 | No. 18-10 | AWG | 600 V | 30/30 |
| CSA ratings | | No. 22-12 | AWG | 600 V | 25 | No. 22-10 | AWG | 600 V | 35 |
| Width | Wire strip length | 5 mm | | | 9 mm | 6 mm | | | 9 mm |
| Approvals | | | | | | | | | |

| | | Type | Part no. | Std. pack | Type | Part no. | Std. pack |
|---|---|---|---|---|---|---|---|
| **Feed-through terminal** | Color: gray | 9700 A/5 S35 | 54.003.7553.0 | 100 | 9700 A/6 S35 | 54.004.7553.0 | 100 |
| **Feed-through terminal, (Ex)i** | Color: blue | 9700 A/5 S35 BLAU | 54.003.7553.6 | 100 | 9700 A/6 S35 BLAU | 54.004.7553.6 | 100 |
| **Neutral disconnect block** | Color: blue | | | | | | |
| **Ground block** | Color: green-yellow | | | | | | |
| **PEN terminal** | Color: green/yellow - blue | | | | | | |
| | | | | | | | |
| **Accessories** | | | | | | | |
| 1. Mounting rail TS 35, DIN rail, 7.5 mm high | L = 2 m | 35 x 27 x 7,5 EN 60715 | 98.300.0000.0 | 1 | 35 x 27 x 7,5 EN 60715 | 98.300.0000.0 | 1 |
| Mounting rail TS 35, DIN rail 15 mm high | L = 2 m | 35 x 27 x 15 EN 60715 | 98.360.0000.0 | 1 | 35 x 27 x 15 EN 60715 | 98.360.0000.0 | 1 |
| 2. End clamp TS 35, with screw | 8 mm wide | 9708/2 S35 | Z5.522.8553.0 | 100 | 9708/2 S35 | Z5.522.8553.0 | 100 |
| 3. End plate | Color: gray | 9701/6 | 07.310.3153.0 | 10 | 9701/6 | 07.310.3153.0 | 10 |
| | Color: blue | 9701/6 BLAU | 07.310.3153.6 | 10 | 9701/6 BLAU | 07.310.3153.6 | 10 |
| | Color: green | | | | | | |
| 4. Partition plate | Color: gray | 9702/6 | 07.310.3453.0 | 10 | 9702/6 | 07.310.3453.0 | 10 |
| | Color: blue | 9702/6 BLAU | 07.310.3453.6 | 10 | 9702/6 BLAU | 07.310.3453.6 | 10 |
| 5. Jumper bar with screws, | 2pole | 9703/5-2 | Z7.215.0227.0 | 50 | 9703/6-2 | Z7.211.0227.0 | 50 |
| E-Cu, uninsulated | 3pole | 9703/5-3 | Z7.215.0327.0 | 50 | 9703/6-3 | Z7.211.0327.0 | 50 |
| | 4pole | 9703/5-4 | Z7.215.0427.0 | 50 | 9703/6-4 | Z7.211.0427.0 | 50 |
| | 5pole | 9703/5-5 | Z7.215.0527.0 | 50 | 9703/6-5 | Z7.211.0527.0 | |
| | 6pole | 9703/5-6 | Z7.215.0627.0 | 50 | 9703/6-6 | Z7.211.0627.0 | 50 |
| Cut-to-order strip | 0.6 m long | 9703/5-M | Z7.215.0027.0 | 10 | 9703/5-M | Z7.211.0027.0 | 10 |
| 6. Switchable connecting link | | | Z7.269.3523.0 | 50 | | Z7.269.2923.0 | 50 |
| 7. Stud bolt for test plug | | 9011 D | 05.508.8921.0 | 10 | 9011 C | 05.508.8821.0 | 10 |
| 8. Test plug | | ST 2/2,3 | Z5.553.2921.0 | 10 | ST 2/2,3 | Z5.553.2921.0 | 10 |
| 9. Cover with warn. symbol over 1 block | Color: yellow | | 04.325.1656.0 | 10 | | 04.325.1056.0 | 10 |
| 10. Busbar | | | | | | | |
| E-Cu, 10 x 3 mm, tin-plated, $I_N$ = 140 A | L = 1 m | | | | | | |
| E-Cu, 10 x 3 mm, unplated, $I_N$ = 140 A | L = 1 m | | | | | | |
| 11. Connector clamps for busbar | | | | | | | |
| 25 mm² | 11.1 mm wide | | | | | | |
| 35 mm² 14.3 mm wide | | | | | | | |
| 12. Busbar support | 6 mm wide | | | | | | |
| 13. Rapid mounting tool | | | 05.593.5853.0 | 10 | | 05.593.4153.0 | |
| For marking accessories see pages 178-179 and 200/202 | | *CL I, ZN1, AExe II | | | *CL I, ZN1, AExe II | | |

# selos



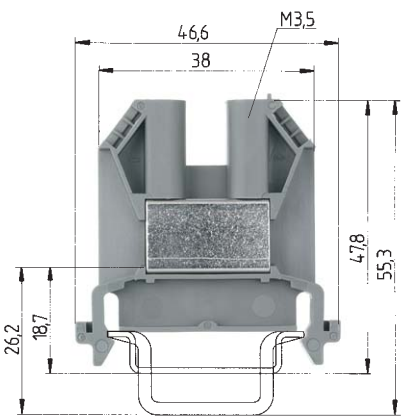


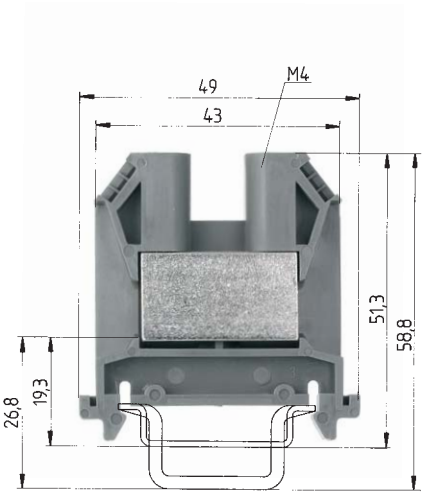


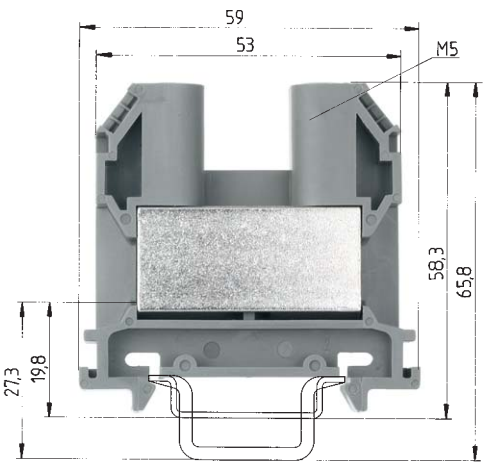


## 9700 A/8 S35

| fine stranded | solid/stranded | V | A |
|---|---|---|---|
| 1 – 10 mm² | 1 – 10 mm² | 800 V/8 kV/3 | 57 |
| No. 18-8 | AWG | 600 V | 50/50 |
| No. 18-8 | AWG | 600 V | 55 |
| 8 mm | | | 12 mm |

| Type | Part no. | Std. pack |
|---|---|---|
| 9700 A/8 S 35 | 54.010.7553.0 | 100 |
| 9700 A/8 S 35 BLAU | 54.010.7553.6 | 100 |
| | | |
| | | |
| | | |
| | | |
| | | |
| 35 x 27 x 7,5 EN 60715 | 98.300.0000.0 | 1 |
| 35 x 27 x 15 EN 60715 | 98.360.0000.0 | 1 |
| 9708/2 S 35 | Z5.522.8553.0 | 100 |
| 9701/8 | 07.310.3253.0 | 10 |
| 9701/8 BLAU | 07.310.3253.6 | 10 |
| | | |
| 9702/8 | 07.310.3553.0 | 10 |
| 9702/8 BLAU | 07.310.3553.6 | 10 |
| 9703/8-2 | Z7.212.0227.0 | 50 |
| 9703/8-3 | Z7.212.0327.0 | 50 |
| 9703/8-4 | Z7.212.0427.0 | 50 |
| 9703/8-5 | Z7.212.0527.0 | 50 |
| 9703/8-6 | Z7.212.0627.0 | 50 |
| | | |
| | Z7.269.3023.0 | 50 |
| 9011 B | 05.508.3221.0 | 10 |
| ST 2/4 | Z5.553.3021.0 | 10 |
| | 04.325.1156.0 | 10 |
| | | |
| | | |
| | | |
| | | |
| | | |
| | | |
| | | |
| | 05.593.5953.0 | 10 |
| *CL I, ZN1, AExe II | | |

## 9700 A/10 S35

| fine stranded | solid/stranded | V | A |
|---|---|---|---|
| 1.5 – 16 mm² | 1.5 – 16 mm² | 800 V/8 kV/3 | 76 |
| No. 18-6 | AWG | 600 V | 65/70 |
| No. 16-6 | AWG | 600 V | 70 |
| 10 mm | | | 15 mm |

| Type | Part no. | Std. pack |
|---|---|---|
| 9700 A/10 S 35 | 54.016.7553.0 | 100 |
| 9700 A/10 S 35 BLAU | 54.016.7553.6 | 100 |
| | | |
| | | |
| | | |
| | | |
| | | |
| 35 x 27 x 7,5 EN 60715 | 98.300.0000.0 | 1 |
| 35 x 27 x 15 EN 60715 | 98.360.0000.0 | 1 |
| 9708/2 S 35 | Z5.522.8553.0 | 100 |
| 9701/10 | 07.310.3953.0 | 10 |
| 9701/10 BLAU | 07.310.3953.6 | 10 |
| | | |
| 9702/10 | 07.310.4053.0 | 10 |
| 9702/10 BLAU | 07.310.4053.6 | 10 |
| 9703/10-2 | Z7.214.0227.0 | 50 |
| 9703/10-3 | Z7.214.0327.0 | 50 |
| 9703/10-4 | Z7.214.0427.0 | 50 |
| 9703/10-5 | Z7.214.0527.0 | 50 |
| 9703/10-6 | Z7.214.0627.0 | 50 |
| | | |
| | Z7.269.3123.0 | 50 |
| 9011 A | 05.508.3121.0 | 10 |
| ST 2/4 | Z5.553.3021.0 | 10 |
| | 04.325.1256.0 | 10 |
| | | |
| | | |
| | | |
| | | |
| | | |
| | | |
| | | |
| | | |
| *CL I, ZN1, AExe II | | |

## 9700 A/12 S35

| fine stranded | solid/stranded | V | A |
|---|---|---|---|
| 2.5 – 25 mm² | 2.5 – 35 mm² | 800 V/8 kV/3 | 101 |
| No. 14- 4 | AWG | 600 V | 85/100 |
| No. 14- 4 | AWG | 600 V | 100 |
| 12 mm | | | 20 mm |

| Type | Part no. | Std. pack |
|---|---|---|
| 9700 A/12 S 35 | 54.025.7553.0 | 50 |
| 9700 A/12 S 35 BLAU | 54.025.7553.6 | 50 |
| | | |
| | | |
| | | |
| | | |
| | | |
| 35 x 27 x 7,5 EN 60715 | 98.300.0000.0 | 1 |
| 35 x 27 x 15 EN 60715 | 98.360.0000.0 | 1 |
| 9708/2 S 35 | Z5.522.8553.0 | 100 |
| 9701/12 | 07.310.3353.0 | 10 |
| 9701/12 BLAU | 07.310.3353.6 | 10 |
| | | |
| 9702/12 | 07.310.3653.0 | 10 |
| 9702/12 BLAU | 07.310.3653.6 | 10 |
| 9703/12-2 | Z7.213.0227.0 | 50 |
| 9703/12-3 | Z7.213.0327.0 | 50 |
| 9703/12-4 | Z7.213.0427.0 | 50 |
| 9703/12-5 | Z7.213.0527.0 | 50 |
| 9703/12-6 | Z7.213.0627.0 | 50 |
| | | |
| | Z7.269.3223.0 | 50 |
| | 05.508.6521.0 | 10 |
| ST 2/4 | Z5.553.3021.0 | 10 |
| | 04.325.1356.0 | 10 |
| | | |
| | | |
| | | |
| | | |
| | | |
| | | |
| | | |
| | | |
| | | |
| *CL I, ZN1, AExe II | | |

# Feed-through blocks
# with screw connection, type *9700 A.. S35*

**selos** CLASSIC LINE

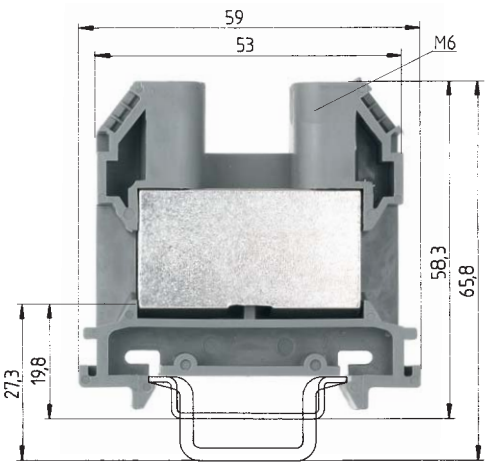


## 9700 A/16 S35

| | | fine stranded | solid/stranded | V | A |
|---|---|---|---|---|---|
| DIN VDE 0611 Teil 3/11.98 | | 2.5 – 35 mm² | 2.5 – 50 mm² | 800 V/8 kV/3 | 125 |
| UL-ratings | field/factory wiring | No. 12-2 AWG | | 600 V | 115/130 |
| CSA ratings | | No. 12-2 AWG | | 600 V | 125 |
| Width | Wire strip length | 16 mm | | | 20 mm |
| Approvals | | | | | |

| | | Type | Part no. | Std. pack |
|---|---|---|---|---|
| **Feed-through block** | Color: gray | 9700 A/16 S 35 | 54.035.7553.0 | 50 |
| **Feed-through block, (Ex)i** | Color: blue | 9700 A/16 S 35 BLAU | 54.035.7553.6 | 50 |
| **Neutral disconnect block** | Color: blue | | | |
| **Ground block** | Color: green-yellow | | | |
| **PEN terminal** | Color: green/yellow - blue | | | |
| | | | | |
| **Accessories** | | | | |
| 1. Mounting rail TS 35, DIN rail, 7.5 mm high | L = 2 m | 35 x 27 x 7,5 EN 60715 | 98.300.0000.0 | 1 |
| Mounting rail TS 35, DIN rail 15mm high | L = 2 m | 35 x 24 x 15 EN 60715 | 98.360.0000.0 | 1 |
| 2. End clamp for TS 35, with screw | 8 mm wide | 9708/2 S35 | Z5.522.8553.0 | 100 |
| 3. End plate | Color: gray | 9701/12 | 07.310.3353.0 | 10 |
| | Color: blue | 9701/12 BLAU | 07.310.3353.6 | 10 |
| | Color: green | | | |
| 4. Partition plate | Color: gray | 9702/12 | 07.310.3653.0 | 10 |
| | Color: blue | 9702/12 BLAU | 07.310.3653.6 | 10 |
| 5. Jumper bar with screws, | 2pole | 9703/16-2 | Z7.216.0227.0 | 50 |
| E-Cu, uninsulated | 3pole | 9703/16-3 | Z7.216.0327.0 | 50 |
| | 4pole | 9703/16-4 | Z7.216.0427.0 | 50 |
| | 5pole | 9703/16-5 | Z7.216.0527.0 | 50 |
| | 6pole | 9703/16-6 | Z7.216.0627.0 | 50 |
| Cut-to-order strip | 0.6 m long | | | |
| 6. Switchable connecting link | | | Z7.269.3423.0 | 50 |
| 7. Stud bolt for test plug | | | 05.508.6521.0 | 10 |
| 8. Test plug | | ST 2/4 | Z5.553.3021.0 | 10 |
| 9. Cover with warn. symbol over 1 block | Color: yellow | | 04.325.1456.0 | 10 |
| 10. Busbar | | | | |
| E-Cu, 10 x 3 mm, tin-plated, $I_N$ = 140 A | L = 1 m | | | |
| E-Cu, 10 x 3 mm, unplated, $I_N$ = 140 A | L = 1 m | | | |
| 11. Connector clamps for busbar | | | | |
| 25 mm² | 11.1 mm wide | | | |
| 35 mm² | 14.3 mm wide | | | |
| 12. Busbar support | 6 mm wide | | | |
| 13. Rapid mounting tool | | | | |
| For marking accessories see pages 178-179 and 200/202 | | *CL I, ZN1, AExe II | | |

# Neutral disconnect blocks with screw terminal, type *9700 A.. S35*

## *selos* CLASSIC LINE



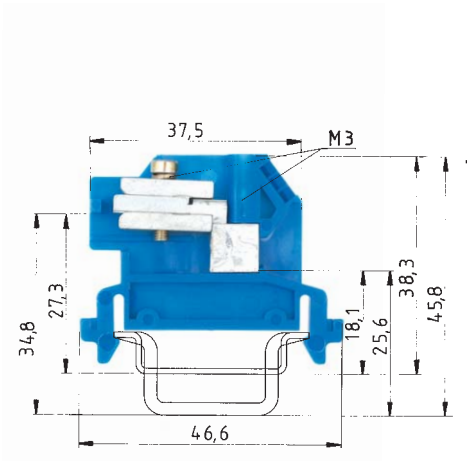


*)Install in grounded systems 690/400 V

### 9700 A/6 ETK S35

| fine stranded | solid | V | A |
|---|---|---|---|
| 0.5 – 4 mm² | 0.5 – 6 mm² | 400 V/6 kV/3*) | 25 |

6 mm 9 mm

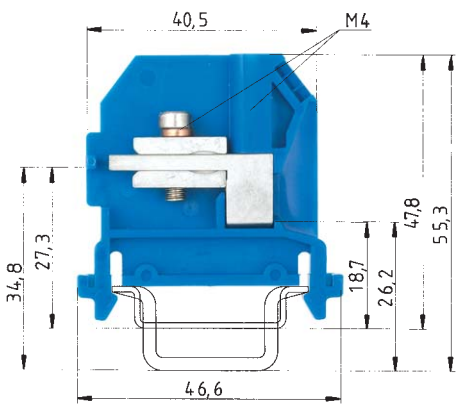


*)Install in grounded systems 690/400 V

### 9700 A/8 ETK S35

| fine stranded | solid/stranded | V | A |
|---|---|---|---|
| 1 – 10 mm² | 1 – 10 mm² | 400 V/6 kV/3*) | 40 |

8 mm 12 mm

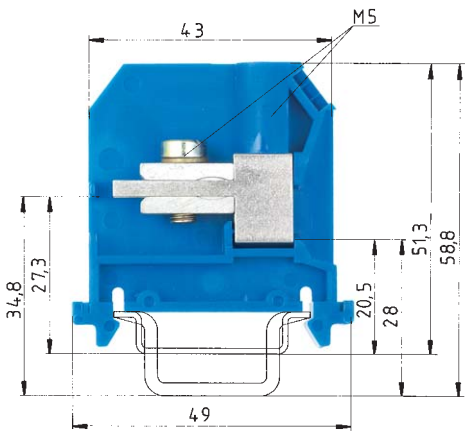


*)Install in grounded systems 690/400 V

### 9700 A/10 ETK S35

| fine stranded | solid/stranded | V | A |
|---|---|---|---|
| 1.5 – 16 mm² | 1.5 – 16 mm² | 400 V/6 kV/3*) | 50 |

10 mm 15 mm

| Type | Part no. | Std. pack | Type | Part no. | Std. pack | Type | Part no. | Std. pack |
|---|---|---|---|---|---|---|---|---|
| 9700 A/6 ETK S 35 | 54.004.7753.0 | 100 | 9700 A/8 ETK S 35 | 54.010.7753.0 | 100 | 9700 A/10 ETK S 35 | 54.016.7753.0 | 100 |
| 35 x 27 x 7,5 EN 60715 | 98.300.0000.0 | 1 | 35 x 27 x 7,5 EN 60715 | 98.300.0000.0 | 1 | 35 x 27 x 7,5 EN 60715 | 98.300.0000.0 | 1 |
| 35 x 24 x 15 EN 60715 | 98.370.0000.0 | 1 | 35 x 24 x 15 EN 60715 | 98.370.0000.0 | 1 | 35 x 24 x 15 EN 60715 | 98.370.0000.0 | 1 |
| 9708/2 S 35 | Z5.522.8553.0 | 100 | 9708/2 S 35 | Z5.522.8553.0 | 100 | 9708/2 S 35 | Z5.522.8553.0 | 100 |
| 9701/6 ETKL | 07.310.4553.0 | 10 | | | | | | |
| | | | 9701 B/8 ETK | 07.310.5253.0 | 50 | 9701 B/10 ETK | 07.310.5353.0 | 50 |
| 9813 M | 98.290.0000.0 | 1 | 9813 M | 98.290.0000.0 | 1 | 9813 M | 98.290.0000.0 | 1 |
| 9813 M SN | 98.290.1000.0 | 1 | 9813 M SN | 98.290.1000.0 | 1 | 9813 M SN | 98.290.1000.0 | 1 |
| | 30.494.1110.6 | 100 | | 30.494.1110.6 | 100 | | 30.494.1110.6 | 100 |
| | 30.494.2510.6 | 100 | | 30.494.2510.6 | 100 | | 30.494.2510.6 | 100 |
| 9701 ASH S 35 | 01.112.1453.0 | 100 | 9701 ASH S 35 | 01.112.1453.0 | 100 | 9701 ASH S 35 | 01.112.1453.0 | 100 |

# Ground blocks
# with screw technology, type *9700 A.. S35*

**selos** CLASSIC LINE

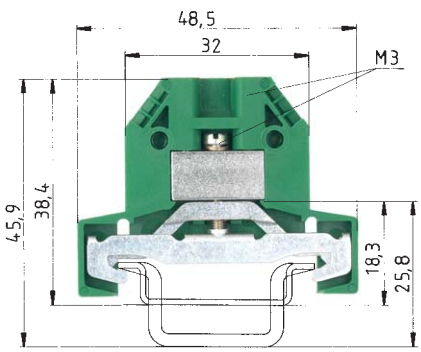


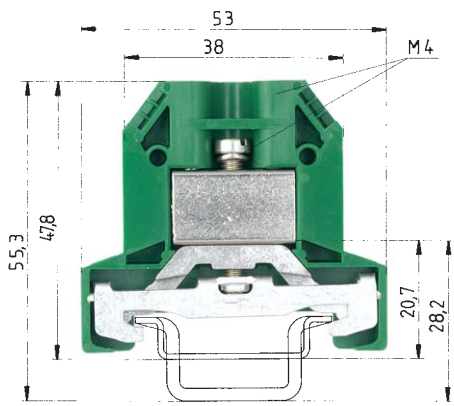


| | | 9700 A/6 SL2 S35 | | | | 9700 A/8 SL2 S35 | | | |
|---|---|---|---|---|---|---|---|---|---|
| | | fine stranded | solid | V | A | fine stranded | solid/stranded | V | A |
| DIN VDE 0611 Teil 3/11.98 | | 0.5 – 4 mm² | 0.5 – 6 mm² | 800 V/8 kV/3*) | **) | 0.5 – 10 mm² | 0.5 – 10 mm² | 800 V/8 kV/3*) | **) |
| UL-ratings | field/factory wiring | No. 18-10 AWG | | 600 V*) | | No. 18-8 AWG | | 600 V*) | |
| CSA ratings | | No. 22-10 AWG | | 600 V *) | | No. 18-8 AWG | | 600 V*) | |
| Width | Wire strip length | 6 mm | | | 9 mm | 8 mm | | | 11 mm |
| Approvals | | | | | | | | | |

| | | Type | Part no. | Std. pack | Type | Part no. | Std. pack |
|---|---|---|---|---|---|---|---|
| **Feed-through terminal** | Color: gray | | | | | | |
| **Feed-through block, (Ex)i** | Color: blue | | | | | | |
| **Neutral disconnect block** | Color: blue | | | | | | |
| **Ground block** | Color: green-yellow | 9700 A/6 SL 2 S 35 | 56.004.9053.0 | 100 | 9700 A/8 SL 2 S 35 | 56.010.9053.0 | 100 |
| **PEN terminal** | Color: green/yellow - blue | | | | | | |
| | | | | | | | |
| **Accessories** | | | | | | | |
| 1. Mounting rail TS 35, DIN rail, 7.5 mm high | L = 2 m | 35 x 27 x 7,5 EN 60715 | 98.300.0000.0 | 1 | 35 x 27 x 7,5 EN 60715 | 98.300.0000.0 | 1 |
| Mounting rail TS 35, DIN rail 15 mm high | L = 2 m | 35 x 24 x 15 EN 60715 | 98.360.0000.0 | 1 | 35 x 24 x 15 EN 60715 | 98.360.0000.0 | 1 |
| 2. End clamp TS 35, with screw | 8 mm wide | 9708/2 S35 | Z5.522.8553.0 | 100 | 9708/2 S 35 | Z5.522.8553.0 | 100 |
| 3. End plate | Color: gray | 9701/6 SL | 07.312.0053.0 | 10 | 9701/8 SL | 07.312.0153.0 | 10 |
| | Color: blue | | | | | | |
| | Color: green | | | | | | |
| 4. Partition plate | Color: gray | | | | | | |
| | Color: blue | | | | | | |
| 5. Jumper bar with screws, | 2pole | | | | | | |
| E-Cu, uninsulated | 3pole | | | | | | |
| | 4pole | | | | | | |
| | 5pole | | | | | | |
| | 6pole | | | | | | |
| Cut-to-order strip | 0.6 m long | | | | | | |
| 6. Switchable connecting link | | | | | | | |
| 7. Stud bolt for test plug | | | | | | | |
| 8. Test plug | | | | | | | |
| 9. Cover with warn. symbol over 1 block | Color: yellow | | | | | | |
| 10. Busbar | | | | | | | |
| E-Cu, 10 x 3 mm, tin-plated, $I_N$ = 140 A | L = 1 m | | | | | | |
| E-Cu, 10 x 3 mm, unplated, $I_N$ = 140 A | L = 1 m | | | | | | |
| 11. Connector clamps for busbar | | | | | | | |
| 25 mm² | 11.1 mm wide | | | | | | |
| 35 mm² 14.3 mm wide | | | | | | | |
| 12. Busbar support | 6 mm wide | | | | | | |
| 13. Rapid mounting tool | | | | | | | |
| For marking accessories see pages 178-179 and 200/202 | | *CL I, ZN1, AExe II | | | *CL I, ZN1, AExe II | | |

# selos



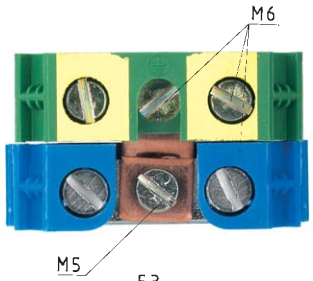


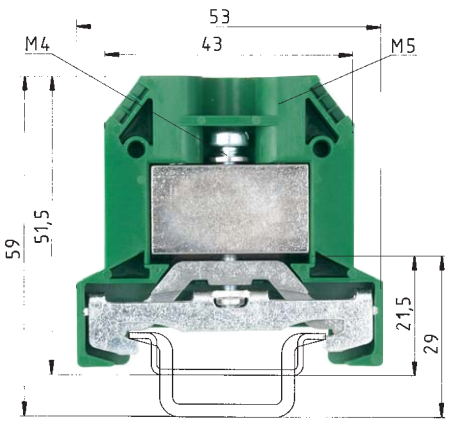


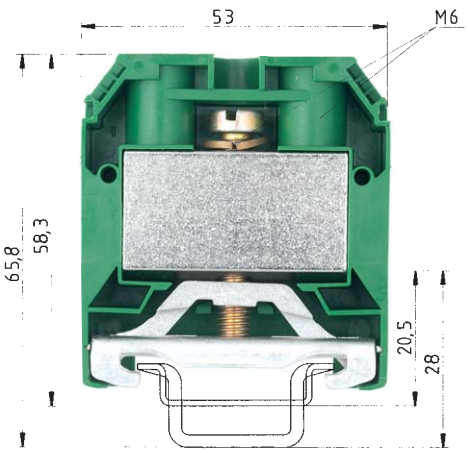


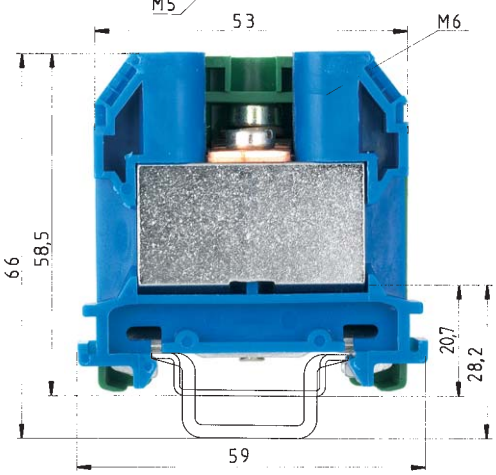


**)For the ratings to adjacent feed-through blocks of the same series and size

## 9700 A/10 SL2 S35

| fine stranded | solid/stranded | V | A |
|---|---|---|---|
| 1.5 – 16 mm² | 1.5 – 16 mm² | 800 V/8 kV/3*) | **) |
| No. 18-6 AWG | | | 600 V*) |
| No. 16-6 AWG | | | 600 V*) |
| 10 mm | | | 16 mm |

## 9700 A/16 SL2 S35

| fine stranded | solid/stranded | V | A |
|---|---|---|---|
| 2.5 – 35 mm² | 2.5 – 50 mm² | 800 V/8 kV/3*) | **) |
| No. 12-2 AWG | | | |
| No. 12-2 AWG | | 600 V*) | |
| 16 mm | | | 18 mm |

## 9700 A/16 PEN 2 S35

| fine stranded | solid/stranded | V | A |
|---|---|---|---|
| 2.5 – 35 mm² | 2.5 – 50 mm² | 500 V/6 kV/3**) | |
| 32 mm | | | 18 mm |

| Type | Part no. | Std. pack |
|---|---|---|
| 9700 A/10 SL 2 S 35 | 56.016.9053.0 | 50 |
| 35 x 27 x 7,5 EN 60715 | 98.300.0000.0 | 1 |
| 35 x 24 x 15 EN 60715 | 98.360.0000.0 | 1 |
| 9708/2 S 35 | Z5.522.8553.0 | 100 |
| 9701/10 SL | 07.312.0253.0 | 10 |

*CL I, ZN1, AExe II

| Type | Part no. | Std. pack |
|---|---|---|
| 9700 A/16 SL 2 S 35 | 56.035.9053.0 | 50 |
| 35 x 27 x 7,5 EN 60715 | 98.300.0000.0 | 1 |
| 35 x 24 x 15 EN 60715 | 98.360.0000.0 | 1 |
| 9708/2 S 35 | Z5.522.8553.0 | 100 |
| 9701/16 SL | 07.312.0353.0 | 10 |

*CL I, ZN1, AExe II

| Type | Part no. | Std. pack |
|---|---|---|
| 9700 A/16 PEN 2, S 35 | 56.035.9453.0 | 20 |
| 35 x 27 x 7,5 EN 60715 | 98.300.0000.0 | 1 |
| 35 x 24 x 15 EN 60715 | 98.370.0000.0 | 1 |
| 9708/2 S 35 | Z5.522.8553.0 | 100 |
| 9701/12 BLAU | 07.310.3353.6 | 10 |
| 9702/12 BLAU | 07.310.3653.6 | 10 |

# Accessories for DIN rail mount terminal blocks with screw technology, type *9700 A.. S35*

**selos** CLASSIC LINE

## Jumper bar with screws

| Type | Part no. | Std. pack |
|---|---|---|
| 2,5 mm² | | |
| **9700 A/5 S 35** | | |
| 2pole 9703/5-2 | Z7.215.0227.0 | 50 |
| 3pole 9703/5-3 | Z7.215.0327.0 | 50 |
| 4pole 9703/5-4 | Z7.215.0427.0 | 50 |
| 5pole 9703/5-5 | Z7.215.0527.0 | 50 |
| 6pole 9703/5-6 | Z7.215.0627.0 | 50 |
| 90pole 9703/5 M-90 | Z7.215.0027.0 | 10 |
| | | |
| **4 mm²** | | |
| **9700 A/6 S 35** | | |
| 2pole 9703/6-2 | Z7.211.0227.0 | 50 |
| 3pole 9703/6-3 | Z7.211.0327.0 | 50 |
| 4pole 9703/6-4 | Z7.211.0427.0 | 50 |
| 5pole 9703/6-5 | Z7.211.0527.0 | 50 |
| 6pole 9703/6-6 | Z7.211.0627.0 | 50 |
| 70pole 9703/6 M-70 | Z7.211.0027.0 | 10 |
| | | |
| 10 mm² | | |
| **9700 A/8 S 35** | | |
| 2pole 9703/8-2 | Z7.212.0227.0 | 50 |
| 3pole 9703/8-3 | Z7.212.0327.0 | 50 |
| 4pole 9703/8-4 | Z7.212.0427.0 | 50 |
| 5pole 9703/8-5 | Z7.212.0527.0 | 50 |
| 6pole 9703/8-6 | Z7.212.0627.0 | 50 |
| 50pole 9703/8 M-50 | Z7.212.0027.0 | 10 |

| Type | Part no. | Std. pack |
|---|---|---|
| 16 mm² | | |
| **9700 A/10 S 35** | | |
| 2pole 9703/10-2 | Z7.214.0227.0 | 50 |
| 3pole 9703/10-3 | Z7.214.0327.0 | 50 |
| 4pole 9703/10-4 | Z7.214.0427.0 | 50 |
| 5pole 9703/10-5 | Z7.214.0527.0 | 50 |
| 6pole 9703/10-6 | Z7.214.0627.0 | 50 |
| 40pole 9703/10 M-40 | Z7.214.0027.0 | 10 |
| | | |
| 25 mm² | | |
| **9700 A/12 S 35** | | |
| 2pole 9703/12-2 | Z7.213.0227.0 | 50 |
| 3pole 9703/12-3 | Z7.213.0327.0 | 50 |
| 4pole 9703/12-4 | Z7.213.0427.0 | 50 |
| 5pole 9703/12-5 | Z7.213.0527.0 | 50 |
| 6pole 9703/12-6 | Z7.213.0627.0 | 50 |
| 30pole 9703/12 M-30 | Z7.213.0027.0 | 10 |
| | | |
| 35 mm² | | |
| **9700 A/16 S 35** | | |
| 2pole 9703/16-2 | Z7.216.0227.0 | 50 |
| 3pole 9703/16-3 | Z7.216.0327.0 | 50 |
| 4pole 9703/16-4 | Z7.216.0427.0 | 50 |
| 5pole 9703/16-5 | Z7.216.0527.0 | 50 |
| 6pole 9703/16-6 | Z7.216.0627.0 | 50 |
| 20pole 9703/16 M-20 | Z7.216.0027.0 | 10 |

## Warning cover

| Type | Part no. | Std. pack |
|---|---|---|
| for terminal block type 9700 A/.. S 35 | | |
| | | |
| 2,5 mm² | 04.325.1656.0 | 10 |
| 4 mm² | 04.325.1056.0 | 10 |
| 10 mm² | 04.325.1156.0 | 10 |
| 16 mm² | 04.325.1256.0 | 10 |
| 25 mm² | 04.325.1356.0 | 10 |
| 35 mm² | 04.325.1456.0 | 10 |

# selos

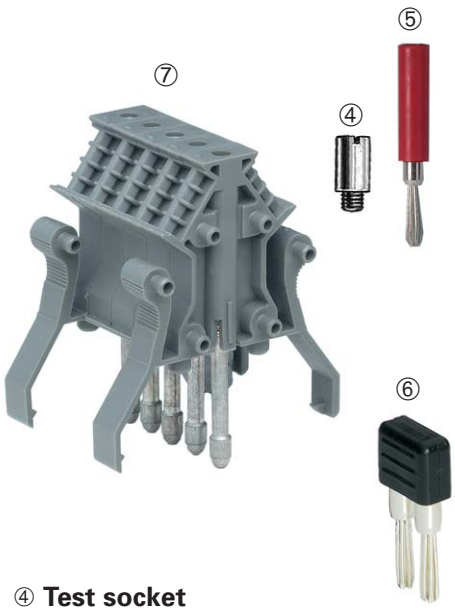

① **Switchable connecting link**
② **Screws with link**
③ **Screw spacer**

④ **Test socket**
⑤ **Test plug with insulated handle**
⑦ **Shorting plug**
⑥ **Modular test plug**

**Rapid mounting tool**

| Type | Part no. | Std. pack |
|---|---|---|
| for terminal block type 9700 A/.. S 35 | | |
| | | |
| Switchable connecting link | | |
| 2,5 mm² | Z7.269.3523.0 | 50 |
| 4 mm² | Z7.269.2923.0 | 50 |
| 10 mm² | Z7.269.3023.0 | 50 |
| 16 mm² | Z7.269.3123.0 | 50 |
| 25 mm² | Z7.269.3223.0 | 50 |
| 35 mm² | Z7.269.3423.0 | 50 |
| | | |
| Switchable connecting link with screws | | |
| 2,5 mm² | Z7.269.2823.0 | 50 |
| 4 mm² | Z7.269.0623.0 | 50 |
| 10 mm² | Z7.269.0523.0 | 50 |
| 16 mm² | Z7.269.0723.0 | 50 |
| | | |
| Threaded stud bolt (screw spacer) | | |
| 2,5 mm² | 05.508.8621.0 | 50 |
| 4 mm² | 05.508.8621.0 | 50 |
| 10 mm² | 05.508.8721.0 | 50 |
| 16 mm² | 05.508.9721.0 | 50 |

| Type | Part no. | Std. pack |
|---|---|---|
| for terminal block type 9700 A/.. S 35 | | |
| | | |
| Test socket | | |
| 2,5 mm² | 05.508.8921.0 | 10 |
| 4 mm² | 05.508.8821.0 | 10 |
| 10 mm² | 05.508.3221.0 | 10 |
| 16 mm² | 05.508.3121.0 | 10 |
| 25 mm² | 05.508.6521.0 | 10 |
| 35 mm² | 05.508.6521.0 | 10 |
| | | |
| Test plug with insulated handle | | |
| Ø 2,3 mm 2,5/4 mm² red | | |
| Ø 4 mm 10/16/25/35 mm² black | | |
| 2,5 mm² | Z5.553.2921.0 | 10 |
| 4 mm² | Z5.553.2921.0 | 10 |
| 10 mm² | Z5.553.3021.0 | 10 |
| 16 mm² | Z5.553.3021.0 | 10 |
| 25 mm² | Z5.553.3021.0 | 10 |
| 35 mm² | Z5.553.3021.0 | 10 |
| | | |
| Shorting plug | | |
| | Z5.553.9400.0 | 100 |
| For all 6 mm wide control cabinet terminal blocks, to | | |
| be used together with stud bolts | | |
| (part no. 05.508.8821) | | |
| | | |
| Modular test plug | | |
| snap-on with locking lever for 9700 A 6/S 35 | | |
| | Z1.299.7153.0 | 10 |
| Test plug | | |
| snap-on | Z1.299.8153.0 | 10 |

| Type | Part no. | Std. pack |
|---|---|---|
| for terminal block type 9700 A/.. S 35 | | |
| | | |
| Rapid mounting tool | | |
| 2,5 mm² | 05.593.5853.0 | 10 |
| 4 mm² | 05.593.4153.0 | |
| 10 mm² | 05.593.5953.0 | 10 |

# Accessories for DIN rail terminal blocks with screw connection

# selos CLASSIC LINE

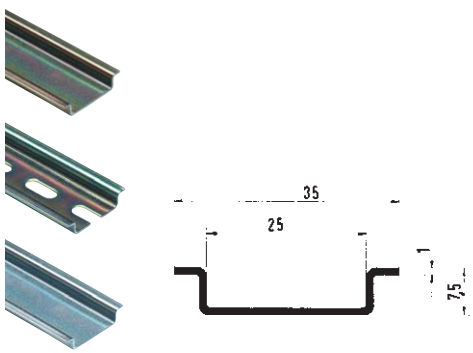


**Mounting rail 35 x 7.5**
accord. to DIN EN 60715

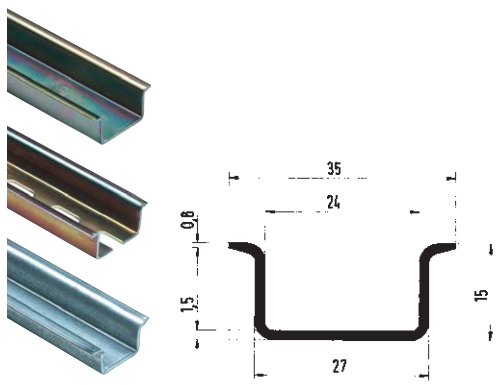


**Mounting rail 35 x 15**
accord. to DIN EN 60715

| | Type | Part no. | Std. pack | Type | Part no. | Std. pack |
|---|---|---|---|---|---|---|
| **Mounting rail** | | | | | | |
| | | | | | | |
| 1. Steel, galv. zinc-plated and dichromated, unslotted L = 2 m | 35 x 27 x 7,5 EN 60715 | 98.300.0000.0 | 1 | 35 x 27 x 15 EN 60715 | 98.370.0000.0 | 1 |
| Steel, galv. zinc-plated and dichromated, slotted L = 2 m | 35 x 27 x 7,5 EN 60715 slotted | 98.300.1000.0 | 1 | 35 x 27 x 15 EN 60715 | 98.370.1000.0 | 1 |
| 2. Steel, unplated unslotted L = 2 m | 35 x 27 x 7,5 EN 60715 unplated | 98.300.0010.0 | | | | |
| Steel, unplated slotted L = 2 m | | | | | | |
| 3. Steel, hot-galvanized unslotted L = 2 m | | | | | | |
| Steel, hot-galvanized slotted L = 2 m | | | | | | |
| 4. E copper unslotted L = 2 m | | | | | | |
| E copper slotted L = 2 m | | | | | | |
| 5. Aluminum unslotted L = 2m | 35 x 27 x 7.5 EN 60715 | 98.750.0000.0 | | | | |
| slotted L = 1 m | 35 x 27 x 7.5 EN 60715 | 98.800.1000.0 | | | | |
| 6. Stainless steel unslotted L = 2m | 35 x 27 x 7.5 EN 60715 | 98.330.0000.0 | | | | |
| | | | | | | |
| | | | | | | |
| | | | | | | |
| | | | | | | |
| | | | | | | |
| | | | | | | |
| **End clamp** | | | | | | |
| | | | | | | |
| 7. End clamp with screw for 35 mm rail 8 mm wide | | | | | | |
| 8. End clamp with screw for 35 mm rail | | | | | | |
| with marking plate 8/17.5 mm wide | | | | | | |
| 9. End clamp, screwless, for 35 mm rail 8 mm wide | | | | | | |
| 10. End clamp, screwless, for 35 mm rail | | | | | | |
| with marking plate 8/17,5 mm wide | | | | | | |
| for terminal rails | | | | | | |
| 11. Bus bar holder 8 mm wide | | | | | | |
| Busbar support, with screw 8 mm | | | | | | |
| 12. Clamping screw for mounting rail | | | | | | |
| 13. Optional label carrier | | | | | | |
| 14. Paper Markers in perforated sheet form | | | | | | |
| (1 sheet = 100 Marking tags) | | | | | | |

# selos



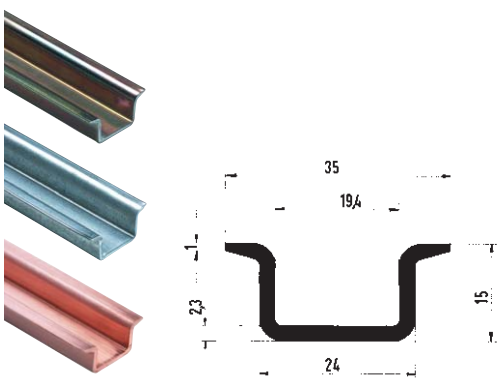

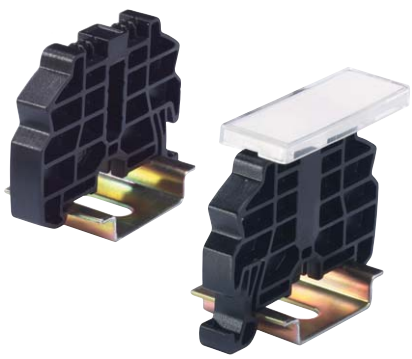

**Mounting rail 35 x 15**
accord. to DIN EN 60715

| Type | Part no. | Std. pack |
|---|---|---|
| 35 x 27 x 15 EN 60715 | 98.360.0000.0 | 1 |
| 35 x 27 x 15 EN 60715 ZN | 98.360.0004.0 | 1 |
| 35 x 27 x 15 EN 60715 CU | 98.380.0000.0 | 10 |

**End clamp for TS 35**
Screw Mounting

| Type | Part no. | Std. pack |
|---|---|---|
| 9708/2 S 35 | Z5.522.8553.0 | 100 |
| 9708/2 BS/35 | 69.920.0553.0 | 100 |
| | 04.019.0289.0 | 10 |

**End clamp for TS 35**
Screwless Mounting

| Type | Part no. | Std. pack |
|---|---|---|
| WEF 1/35 | Z5.523.9353.0 | 100 |
| WEF 1 BS/35 | 69.920.1053.0 | 100 |
| WKIF SH/E/35 | Z1.108.8453.0 | 10 |
| | 69.920.1153.0 | |
| | 05.091.0200.0 | |
| BSIR | Z4.243.8453.0 | |
| | 04.019.0289.0 | 10 |

# Marking accessories for DIN rail terminal blocks

## *selos* CLASSIC LINE

Material:
Polyamide 66/6
Color: black figures on white background

**5 mm pitch**

DIN rail terminal blocks with screw connection of series 97.., can take in marking tags on both sides on top of the block in a 3-chamber slot. It can be either 3 single number tags from the tear-off marking strip, or single tags, or marking strips.

1. **Marking strips** marked
   and unmarked, made from Polyamide 66/6, suitable for10 blocks in a row.

   Marking 1-10, 11-20 etc. up to 991-999.
   Type 9705 A/5/10 (5 mm spacing)
   for 5mm wide terminal blocks
   Type 9705 A/6/10 (6 mm spacing)
   for 6 mm wide terminal blocks
   Typ 9705 A/8/10 (8 mm spacing)
   for 8 mm wide terminal blocks
   Type 9705 A/5/10/5 B (10 mm spacing)
   for 10 mm wide terminal blocks
   Type 9705 A/6/10/5 B (12 mm spacing)
   for 12 mm wide terminal blocks
   Typ 9705 A/8/10/5 B (16 mm spacing)
   for 16 mm wide terminal blocks
2. **Tear-off marking strip** with 10 marking tags, made from Polyamide 66/6, white, marked and unmarked.

   This marking system considerably reduces the time required for marking terminal block rows. For numerical marking of terminal block rows only 11 stock positions are required. As the time used for picking and attaching the tags is reduced, and as stockkeeping is low and the prices extremely favorable, enormous cost savings are the result from using these tear-off marking strips.

   Type 9704 A...
   (see page 180)
3. **Single marking tag** made from white Polyamide 66/6, marked and unmarked.
   Type 9705 A...

### All terminal widths/pitch

| Type | Part no. | Std. pack | Type | | Part no. | Std. pack |
|---|---|---|---|---|---|---|
| **Single marking tag, unmarked** | | | **Marking strips, unmarked** | | | |
| 9705 A | 04.242.0850.0 | 500 | 9705 A/5/10 | | 04.242.5053.0 | 25 |
| **Single marking tag, marked** | | | **Marking strips, marked** | | | |
| 9705 AB* | 04.842.0850.0 | 500 | | | | |
| | | | 9705 A/5/9 B | 1 - 9 | 04.842.4953.0 | 25 |
| | | | 9705 A/5/10 B* | | 04.842.5053.0 | 25 |
| | | | 9705 A/5/10 B | 1 - 10 | 04.845.0153.0 | 25 |
| | | | | 11 - 20 | 04.845.0253.0 | 25 |
| **Single marking tag, unmarked** | | | | 21 - 30 | 04.845.0353.0 | 25 |
| **with enlarged marking area** | | | | 31 - 40 | 04.845.0453.0 | 25 |
| 9705 AL | 04.242.1553.0 | 500 | | 41 - 50 | 04.845.0553.0 | 25 |
| | | | | 51 - 60 | 04.845.0653.0 | 25 |
| **Single marking tag, marked** | | | | 61 - 70 | 04.845.0753.0 | 25 |
| **for enlarged marking area** | | | | 71 - 80 | 04.845.0853.0 | 25 |
| 9705 ALB | 04.842.1553.0 | 500 | | 81 - 90 | 04.845.0953.0 | 25 |
| | | | | 91 - 100 | 04.845.1053.0 | 25 |
| | | | | | | |
| | | | | ⏚ (protective earth) (10 x) | 04.855.0053.0 | 25 |
| | | | | ⏚ (earth) (10 x) | 04.855.0153.0 | 25 |
| | | | | + (10 x) | 04.855.0253.0 | 25 |
| | | | | – (10 x) | 04.855.0353.0 | 25 |
| | | | | L1 (10 x) | 04.855.0453.0 | 25 |
| | | | | L2 (10 x) | 04.855.0553.0 | 25 |
| | | | | L3 (10 x) | 04.855.0653.0 | 25 |
| | | | | PE (10 x) | 04.855.0753.0 | 25 |
| | | | | SL (10 x) | 04.855.3153.0 | 25 |
| | | | | N (10 x) | 04.855.3253.0 | 25 |
| | | | | F1 (10 x) | 04.855.0953.0 | 25 |
| | | | | F2 (10 x) | 04.855.1053.0 | 25 |
| | | | | L1, L2, L3, N, PE (2 x) | 04.855.0853.0 | 25 |
| | | | | | | |
| | | | with enlarged marking area | | | |
| | | | 9705 AL/5/10 | | 04.242.5153.0 | 25 |
| *Custom marking upon request | | | * Custom marking upon request | | | |

# selos

## 6 mm pitch

| Type | | Part no. | Std. pack |
|---|---|---|---|
| **Marking strips, unmarked** | | | |
| 9705 A/6/10 | | 04.242.6053.0 | 25 |
| | | | |
| **Marking strips, marked** | | | |
| 9705 A/6/9 B | 1 - 9 | 04.842.5953.0 | 25 |
| 9705 A/6/10 B* | | 04.842.6053.0 | 25 |
| 9705 A/6/10 B | 1 - 10 | 04.846.0153.0 | 25 |
| | 11 - 20 | 04.846.0253.0 | 25 |
| | 21 - 30 | 04.846.0353.0 | 25 |
| | 31 - 40 | 04.846.0453.0 | 25 |
| | 41 - 50 | 04.846.0553.0 | 25 |
| | 51 - 60 | 04.846.0653.0 | 25 |
| | 61 - 70 | 04.846.0753.0 | 25 |
| | 71 - 80 | 04.846.0853.0 | 25 |
| | 81 - 90 | 04.846.0953.0 | 25 |
| | 91 - 100 | 04.846.1053.0 | 25 |
| | | | |
| ⏚ | (10 x) | 04.856.0053.0 | 25 |
| ⏚ | (10 x) | 04.856.0153.0 | 25 |
| + | (10 x) | 04.856.0253.0 | 25 |
| – | (10 x) | 04.856.0353.0 | 25 |
| L1 | (10 x) | 04.856.0453.0 | 25 |
| L2 | (10 x) | 04.856.0553.0 | 25 |
| L3 | (10 x) | 04.856.0653.0 | 25 |
| PE | (10 x) | 04.856.0753.0 | 25 |
| SL | (10 x) | 04.856.3153.0 | 25 |
| N | (10 x) | 04.856.3253.0 | 25 |
| F1 | (10 x) | 04.856.0953.0 | 25 |
| F2 | (10 x) | 04.856.1053.0 | 25 |
| L1, L2, L3, N, PE | (2 x) | 04.856.0853.0 | 25 |
| | | | |
| with enlarged marking area | | | |
| 9705 AL/6/10 | | 04.242.6353.0 | 25 |
| * Custom marking upon request | | | |

## 8 mm pitch

| Type | | Part no. | Std. pack |
|---|---|---|---|
| **Marking strips, unmarked** | | | |
| 9705 A/8/10 | | 04.242.8053.0 | 25 |
| | | | |
| **Marking strips, marked** | | | |
| 9705 A/8/9 B | 1 - 9 | 04.842.7953.0 | 25 |
| 9705 A/8/10 B* | | 04.842.8053.0 | 25 |
| 9705 A/8/10 B | 1 - 10 | 04.848.0153.0 | 25 |
| | 11 - 20 | 04.848.0253.0 | 25 |
| | 21 - 30 | 04.848.0353.0 | 25 |
| | 31 - 40 | 04.848.0453.0 | 25 |
| | 41 - 50 | 04.848.0553.0 | 25 |
| | 51 - 60 | 04.848.0653.0 | 25 |
| | 61 - 70 | 04.848.0753.0 | 25 |
| | 71 - 80 | 04.848.0853.0 | 25 |
| | 81 - 90 | 04.848.0953.0 | 25 |
| | 91 - 100 | 04.848.1053.0 | 25 |
| | | | |
| ⏚ | (10 x) | 04.858.0053.0 | 25 |
| ⏚ | (10 x) | 04.858.0153.0 | 25 |
| + | (10 x) | 04.858.0253.0 | 25 |
| – | (10 x) | 04.858.0353.0 | 25 |
| L1 | (10 x) | 04.858.0453.0 | 25 |
| L2 | (10 x) | 04.858.0553.0 | 25 |
| L3 | (10 x) | 04.858.0653.0 | 25 |
| PE | (10 x) | 04.858.0753.0 | 25 |
| SL | (10 x) | 04.858.3153.0 | 25 |
| N | (10 x) | 04.858.3253.0 | 25 |
| F1 | (10 x) | 04.858.0953.0 | 25 |
| F2 | (10 x) | 04.858.1053.0 | 25 |
| L1, L2, L3, N, PE | (2 x) | 04.858.0853.0 | 25 |
| | | | |
| | | | |
| | | | |
| | | | |
| *Custom marking upon request | | | |

## 10 mm pitch

## 12 mm pitch

## 16 mm pitch

| Type | | Part no. | Std. pack |
|---|---|---|---|
| **16 mm²/10 mm pitch** | | | |
| | | | |
| **marked for 5 blocks (every 2nd tag) *** | | | |
| 9705 A/5/10/5 B | | 04.842.5553.0 | 25 |
| | | | |
| | | | |
| | | | |
| **25 mm²/12 mm pitch** | | | |
| | | | |
| **marked for 5 blocks (every 2nd tag) *** | | | |
| 9705 A/6/10/5 B | | 04.842.6553.0 | 25 |
| | | | |
| | | | |
| | | | |
| **35 mm²/16 mm pitch** | | | |
| | | | |
| **marked for 5 blocks (every 2nd tag) *** | | | |
| 9705 A/8/10/5 B | | 04.842.8553.0 | 25 |
| | | | |
| | | | |
| | | | |
| | | | |
| | | | |
| | | | |
| | | | |
| | | | |
| | | | |
| | | | |
| | | | |
| * indicate required marking with part no. | | | |

# Marking accessories for DIN rail terminal blocks

selos

## Tear-off marking strip with 10 marking tags

| Material: Polyamide 66/6 white, marking in black Marking per strip | | Type | Part no. | Stand. pack |
|---|---|---|---|---|
| unmarked | | 9704 A | 04.241.1150.0 | 25 |
| marked with the same number | 1 1 1 1 1 1 1 1 1 1 | 9704 A/1 B | 04.841.1150.0 | 25 |
| | 2 2 2 2 2 2 2 2 2 2 | 9704 A/2 B | 04.841.1250.0 | 25 |
| | 3 3 3 3 3 3 3 3 3 3 | 9704 A/3 B | 04.841.1350.0 | 25 |
| | 4 4 4 4 4 4 4 4 4 4 | 9704 A/4 B | 04.841.1450.0 | 25 |
| | 5 5 5 5 5 5 5 5 5 5 | 9704 A/5 B | 04.841.1550.0 | 25 |
| | 6 6 6 6 6 6 6 6 6 6 | 9704 A/6 B | 04.841.1650.0 | 25 |
| | 7 7 7 7 7 7 7 7 7 7 | 9704 A/7 B | 04.841.1750.0 | 25 |
| | 8 8 8 8 8 8 8 8 8 8 | 9704 A/8 B | 04.841.1850.0 | 25 |
| | 9 9 9 9 9 9 9 9 9 9 | 9704 A/9 B | 04.841.1950.0 | 25 |
| | 0 0 0 0 0 0 0 0 0 0 | 9704 A/0 B | 04.841.2050.0 | 25 |
| marked with consecutive numbers | 1 2 3 4 5 6 7 8 9 0 | 9704 A/1-0 B | 04.841.2150.0 | 25 |
| marked with the same symbols | + + + + + + + + + + | 9704 A/+ B | 04.841.7450.0 | 25 |
| | – – – – – – – – – – | 9704 A/– B | 04.841.7550.0 | 25 |
| | / / / / / / / / / / | 9704 A// B | 04.841.7650.0 | 25 |
| | . . . . . . . . . . | 9704 A/. B | 04.841.7750.0 | 25 |
| 1 set of the same numbers = 10 x 25 strips = 2500 numbers | 1 1 1 ... 0 0 0 | A to Z (capital letters) | 04.841.9050.0 | 1 |
| 1 set of capital letters = 26 x 25 strips = 6500 letters | A A A ... Z Z Z | a to z (small letters) | 04.841.9150.0 | 1 |
| 1 set of small letters = 26 x 25 strips = 6500 letters | a a a ... z z z | | 04.841.9250.0 | 1 |

# TOP system

# selos



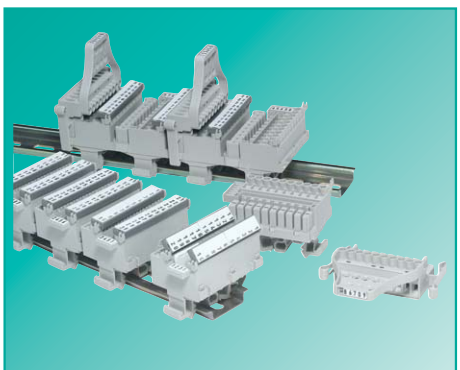

**The TOP system offers**

- ❒ Terminal block module based on narrow pitch of 5mm
- ❒ Top-System allows wire entry and screwdriver access in the same plane

**Application advantages**

- → Save space in the panel – up to 40%
- → Ease of inserting and terminating the conductor

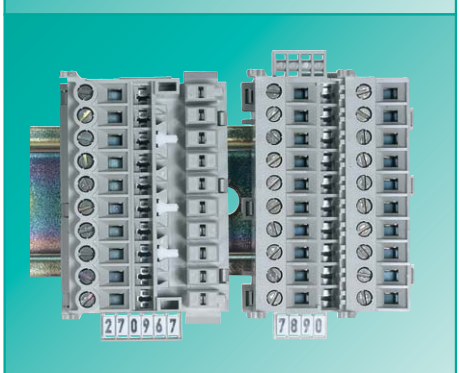

**Universal mounting foot** for
- ❒ TS 35 mm DIN rail to EN 60715
- ❒ TS 32 mm DIN rail to EN 60715

Feed-through terminals located in the center

→ Easy mounting, secure attachment on all types of DIN rail

**Materials:**
Insulating housing: Polyamide 66/6
Clamping body / clamping screws: steel, zinc-plated and dichromated
Current Carrying Bar: Tin-plated copper alloy

→ Due to its excellent electrical, chemical and mechanical properties

→ Low contact resistance

→ Each terminal can be marked individually

**TOP plug system**

Accepts 10 pole plug-able connector

Coding capability: 28 coding configurations

**Plug-able** connector with locking levers

Strain relief

**Ease of use**

Clean and neat wiring

Plug-able connector cannot be mismated

Plug-able connector provides a safe connection which locks in place

Strain relief with cable ties via holes on the marking late

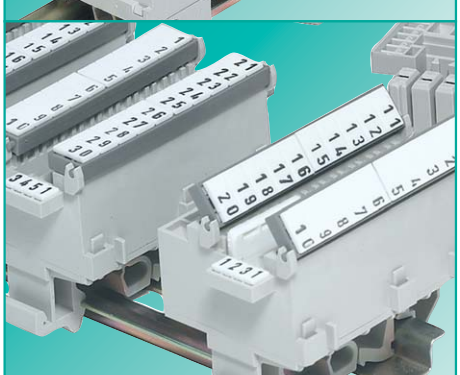

**Top-system standard**

10 pole feed through terminal block module

Orientation perpendicular to the mounting rail

Pitch/width is only 39 mm for 10 terminals

Screw technology

**Ease of use**

Clean and neat wiring

Secure connection

**Marking tag system**

- ❒ Snap in marking tag carrier
- ❒ Marking facility for module
- ❒ Marking system uses Wieland standard tags
- ❒ Module is molded with marking 1-10

→ Mark every termination point

→ Mark modules individually

→ Reduces Inventory

→ Quick and easy installation (no screws)

**Potential commoning**

- ❒ Insulated plug-in jumper bars (2-10 pole)

→ Increased safety due to tough safe design

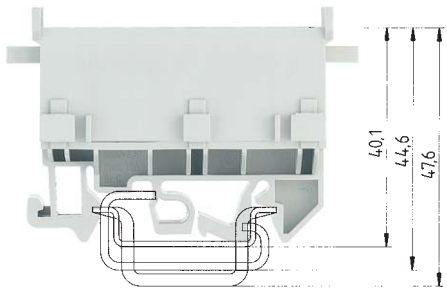

## WKB 2,5/U

| | | fine stranded | solid | V | A |
|---|---|---|---|---|---|
| EN 60 947-7-1/DIN VDE 0611 T1 | | 0.5 - 2.5 mm² | 0.5 - 4 mm² | 400 V/6 kV/3 | 20 |
| UL-ratings | | No. 22-12 | AWG | 300 V | 10 |
| CSA ratings | | No. max. 12 AWG | | 300 V | 10 |
| Width | Wire strip length | 39 mm | | | 10 mm |
| Approvals | | | | | |

| | Type | Part no. | Std. pack |
|---|---|---|---|
| **Terminal block assembly (screw)** | WKB 2,5/U | 57.603.0055.0 | 10 |
| **Terminal block assembly (screw/plug)** | | | |
| **TOP plug** with coding and marking facilities | | | |
| | | | |
| | | | |
| | | | |
| **Accessories** | | | |
| 1. Mounting rail TS 35, DIN rail, 7.5 mm high L = 2 m | 35 x 27 x 7,5 EN 60715 | 98.300.0000.0 | 1 |
| Mounting rail TS 35, DIN rail 1.5mm high L = 2 m | 35 x 24 x 15 EN 60715 | 98.360.0000.0 | 1 |
| Mounting rail TS 32 G rail L = 2 m | 9006 EN 60715 G-32 | 98.190.0000.0 | 1 |
| 2. End clamp with U-foot 10 mm wide | WE 1/U | Z5.523.5753.0 | 100 |
| End clamp TS 35, with screw 8 mm wide | 9708/2 S 35 | Z5.522.8553.0 | 100 |
| End clamp TS 32, with screw 7.5 mm wide | 9708 | Z5.522.7053.0 | 100 |
| | | | |
| | | | |
| | | | |
| | | | |
| | | | |
| | | | |
| | | | |
| | | | |
| 3. Push-in jumper bar | | | |
| E-Cu insulated 2pole | | Z7.258.0225.0 | 10 |
| 3pole | | Z7.258.0325.0 | 10 |
| to 10pole | | Z7.258.1025.0 | 10 |
| 4. Mounting adapter for mounting right | | 05.523.1610.0 | 10 |
| parallel to the rail left | | 05.523.1710.0 | 10 |
| | | | |
| | | | |
| | | | |
| Coding pins, 10 each per strip | | | |
| | | | |
| Marking tag carrier, snap-on | | 04.242.3253.0 | |
| For marking systems see pages 178-183 and 250-251 | | | |

*) When two cross connectors are mounted adjacent to each other, the rated voltage is reduced to 250 V/4 kV/3

# selos

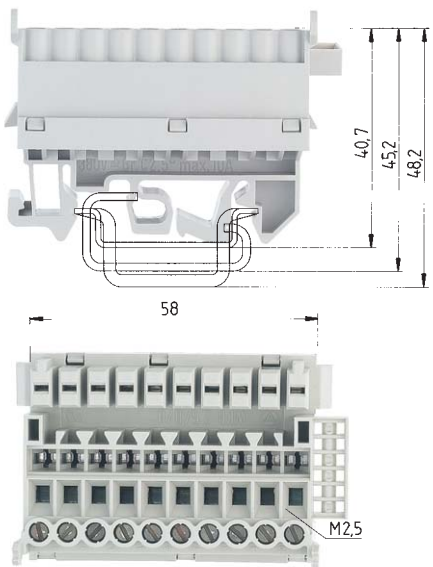


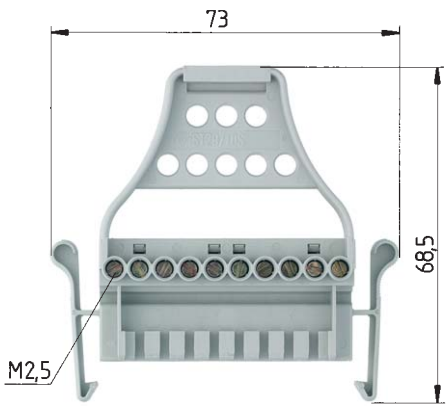


## WKB 2,5/B/U

| fine stranded | solid | V | A |
|---|---|---|---|
| 0.5 - 2.5 mm² | 0.5 - 4 mm² | 400 V/6 kV/3 | 10 |
| No. 22-12 | AWG | 300 V | 5 |
| No. 22-12 | AWG | 300 V | 5 |
| 38 mm | | | 10 mm |

## ST 29/10 S

| fine stranded | solid | V | A |
|---|---|---|---|
| 0.5 - 2.5 mm² | 0.5 - 4 mm² | 400 V/6 kV/3 | 10 |
| No. 22-14 | AWG | 300 V | 5 |
| No. 22-14 | AWG | 300 V | 5 |
| | | | 6 mm |

| Type | Part no. | Std. pack |
|---|---|---|
| WKB 2,5/B/U | 57.603.3555.0 | 10 |
| 35 x 27 x 7,5 EN 60715 | 98.300.0000.0 | 1 |
| 35 x 24 x 15 EN 60715 | 98.360.0000.0 | 1 |
| 9006 EN 60715 G-32 | 98.190.0000.0 | 1 |
| WE 1/U | Z5.523.5753.0 | 100 |
| 9708/2 S 35 | Z5.522.8553.0 | 100 |
| 9708 | Z5.522.7053.0 | 100 |
| | Z7.258.0225.0 | 10 |
| | Z7.258.0325.0 | 10 |
| | Z7.258.1025.0 | 10 |
| | 05.599.8053.0 | 100 |

| Type | Part no. | Std. pack |
|---|---|---|
| ST 29/10 S | 93.102.0055.0 | 50 |
| | Z7.258.0225.0 | 10 |
| | Z7.258.0325.0 | 10 |
| | Z7.258.1025.0 | 10 |
| | 05.599.8053.0 | 100 |

**Coding**

| | | | | | | | | |
|---|---|---|---|---|---|---|---|---|
| S | B | B | B | B | B | B | S | 1. combination |
| S | B | B | B | B | B | S | B | 2. combination |
| S | B | B | B | B | S | B | B | 3. combination |
| S | B | B | B | S | B | B | B | 4. combination |
| S | B | B | S | B | B | B | B | 5. combination |
| S | B | S | B | B | B | B | B | 6. combination |
| S | S | B | B | B | B | B | B | 7. combination |
| B | S | B | B | B | B | B | S | 8. combination |
| B | S | B | B | B | B | S | B | 9. combination |
| B | S | B | B | B | S | B | B | 10. combination |
| B | S | B | B | S | B | B | B | 11. combination |
| B | S | B | S | B | B | B | B | 12. combination |
| B | S | S | B | B | B | B | B | 13. combination |
| B | B | S | B | B | B | B | S | 14. combination |
| B | B | S | B | B | B | S | B | 15. combination |
| B | B | S | B | B | S | B | B | 16. combination |
| B | B | S | B | S | B | B | B | 17. combination |
| B | B | S | S | B | B | B | B | 18. combination |
| B | B | B | S | B | B | B | S | 19. combination |
| B | B | B | S | B | B | S | B | 20. combination |

etc.

# Distribution module, 32 pole
# plug-able system with shield connection

selos

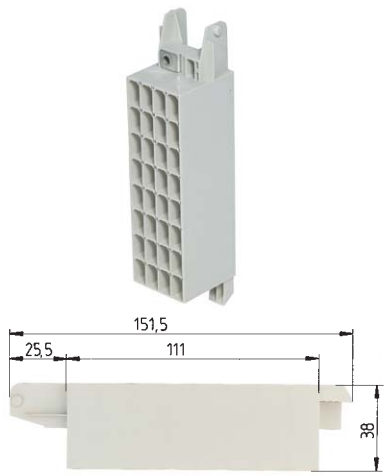


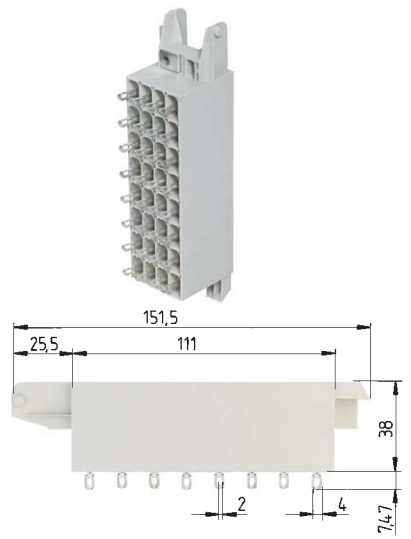


Material: Insulating part: Polyamide 66/6 gray, blue
Tab connector: tin-plated copper alloy
Spring contact: tin-plated bronze
Tab connector: 2.8 x 0.8 mm

*) Push-on connector 6.3 mm 20 A
Push-on connector 2.8 mm 10 A
TERMI-POINT 10 A

| | | RV2S/... | | | | RV2S/...L | | | |
|---|---|---|---|---|---|---|---|---|---|
| | | Front | Rear | V | A | Front | Rear | V | A |
| Voltage accord. to DIN VDE 0110 | | | | 400 V/6 kV/3 | *) | | | 400 V/6 kV/3 | *) |
| Distribution module | gray (per pole) | 3 x 2,8 x 0,8 | 3 x 2,8 x 0,8 | | | 3 x 2,8 x 0,8 | 1 Lötanschluss | | |
| | blue | 2 x 2,8 x 0,8 | 2 x 2,8 x 0,8 | | | 2 x 2,8 x 0,8 | 1 Lötanschluss | | |

| | Type | Part no. | Std. pack | Type | Part no. | Std. pack |
|---|---|---|---|---|---|---|
| **Distribution module** pluggable system Color: gray | RV2S/6 | 26.500.2053.0 | 10 | RV2S/3L | 26.500.2153.0 | 10 |
| Color: blue | RV2S/4 blau | 26.500.2353.0 | 10 | RV2S/2L blau | 26.500.2453.0 | 10 |
| **Plug-able connector** Color: gray | | | | | | |
| Color: blue | | | | | | |
| | | | | | | |
| | | | | | | |
| **Accessories** | | | | | | |
| 1. Spring contact for 0.5 - 1 mm² | | | | | | |
| Banded contacts | | | | | | |
| Single contact | | | | | | |
| 4. Spring contact for 0.1 – 0.5 mm² | | | | | | |
| Banded contacts | | | | | | |
| Single contact | | | | | | |
| 7. Crimp Tool | | | | | | |
| 8. Contact removal tool | | | | | | |
| 9. Replacement latch | | | | | | |
| For marking systems see pages 178-183 and 250-251 | | | | | | |

# selos



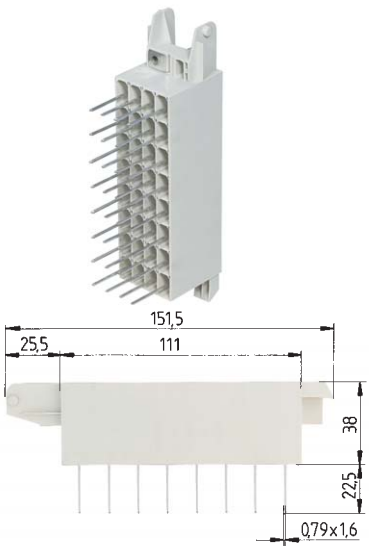


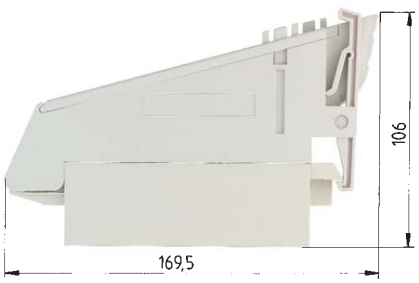

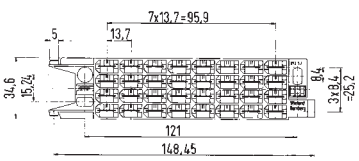


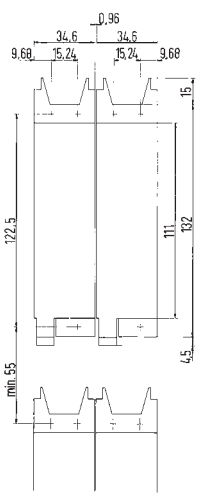


## RV2S/...TP1

| Front | Rear | V<br>400 V/6 kV/3 | A<br>*) | V<br>400 V/6 kV/3 | A<br>*) |
|---|---|---|---|---|---|
| 3 x 2,8 x 0,8 | 2 x 2,8 x 0,8<br>1 x Termi-Point | | | | |
| 2 x 2,8 x 0,8 | 1 x Termi-Point | | | | |

| Type | Part no. | Std. pack | Type | Part no. | Std. pack |
|---|---|---|---|---|---|
| RV2S/3TP1 | 26.500.2253.0 | 10 | | | |
| RV2S/2TP1blau | 26.500.2553.0 | 10 | | | |
| | | | | 93.004.0056.0 | 10 |
| | | | | 93.004.0056.6 | 10 |
| | | | | 02.124.4000.0 | 4000 |
| | | | | 02.124.4029.0 | |
| | | | | 02.124.4100.0 | 4000 |
| | | | | 02.124.4129.0 | |
| | | | | 95.101.0612.0 | 1 |
| | | | | 05.502.0200.0 | 1 |
| | | | | 05.502.0500.0 | 1 |

The narrow design of the terminal block is only 35 mm wide, with 32 connections in four rows and, means that you can increase the packing density when using touch-on clamp type or solder connection methods. This sytem can be expanded using a 32 pole plug which enables simultaneous connection of 32 contacts.
Advantages:
- easy connection of all poles via a hinged lever on the group plug
- can be fixed securely by means of an easy-to-operate locking lever on the lower section
- cable strain relief
- a cover on the plug connector enables measurements to be taken when the group plug in connected
- leading earth contact which can be directly connected to the frame upon assembly
- marking facility – marker tag type 9705 AB and 9704 AB (see page 180)

# Distribution Module 32pole

selos

Material: Insulating part: Polyamide 66/6 gray, blue
Tab connector: tin-plated brass
Tab connector: 2.8 x 0.8 mm

| | | |
|---|---|---|
| *) Push-on connector | 6.3 mm | 20 A |
| Push-on connector | 2.8 mm | 10 A |
| TERMI-POINT | | 10 A |

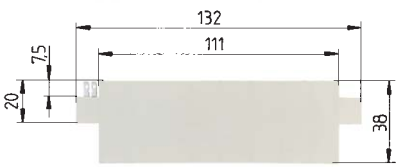


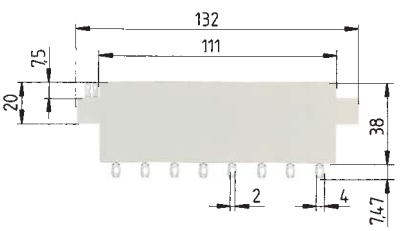


| | RV2/A... | | | | RV2A/...L | | | |
|---|---|---|---|---|---|---|---|---|
| | Front | Rear | V | A | Front | Rear | V | A |
| Voltage accord. to DIN VDE 0110 | | | 400 V/6 kV/3 | *) | | | 400 V/6 kV/3 | *) |
| Stacking coordinate gray (per pole) | 3 x 2.8 x 0.8 | 3 x 2.8 x 0.8 | | | 3 x 2.8 x 0.8 | 1 | | |
| blue | 2 x 2.8 x 0.8 | 2 x 2.8 x 0.8 | | | 2 x 2.8 x 0.8 | 1 | | |

| | | Type | Part no. | Std. pack | Type | Part no. | Std. pack |
|---|---|---|---|---|---|---|---|
| **DIstribution module** standard version | Color: gray | RV2A/6 | 26.500.4053.0 | 10 | RV2A/3L | 26.500.4153.0 | 10 |
| | Color: blue | RV2A/4 blau | 26.500.4353.0 | 10 | RV2A/2L blau | 26.500.4453.0 | 10 |

For marking systems see pages 178-183 and 250-251

# selos

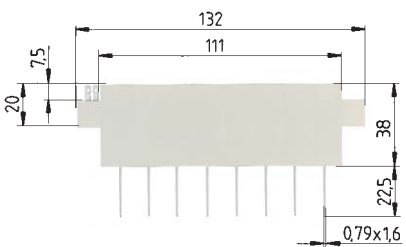

## RV2A/...TP1

| Front | Rear | V<br>400 V/6 kV/3 | A<br>*) |
|---|---|---|---|
| 3 x 2.8 x 0.8 | 2 x 2,8 x 0,8<br>1 x Termi-Point | | |
| 2 x 2.8 x 0.8 | 1 x Termi-Point | | |

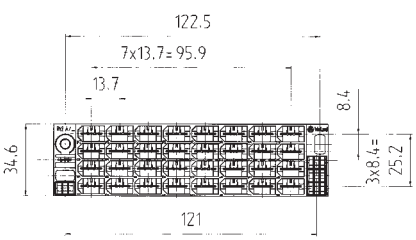


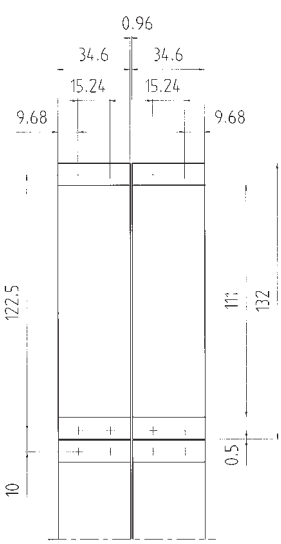


| Type | Part no. | Std. pack |
|---|---|---|
| RV2A/3TP1 | 26.500.4253.0 | 10 |
| RV2A/2TP blau | 26.500.4553.0 | 10 |

# Shielded cable terminals, type *SK*

selos

**System advantages**

- ❒ Easy and safe contacting without damage to the braided shield
- ❒ Stainless Steel pressure spring ensures excellent contact
- ❒ Corrosion resistant due to anticorodal contact material
- ❒ spring terminal available in three different sizes (5 – 34 mm diameter)
- ❒ Potential commoning via the mounting rail
- ❒ Insulated mounting of the rail via the plastic (duroplast) mounting feet

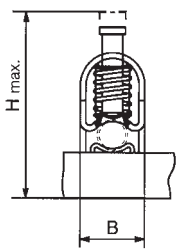


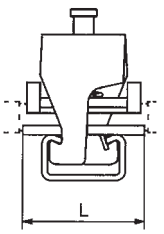

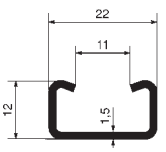


Material: Anticorodal

## SK...

| Type (shielded cable diameter) | Clamping Force | B | L | $H_{max}$ |
|---|---|---|---|---|
| SK5-11 | 14-24 N | 17 mm | 32 mm | 49 mm |
| SK9,5-13,5 | 20-35 N | 22 mm | 32 mm | 54 mm |
| SK12,5-16,5 | 28-47 N | 26 mm | 32 mm | 58,5 mm |
| SK15,5-20,5 | 70-95 N | 32 mm | 32 mm | 66,5 mm |
| SK19-27 | 85-107 N | 39 mm | 32 mm | 73 mm |
| SK26-34 | 105-130 N | 48 mm | 32 mm | 84 mm |

| | Type | Part no. | Std. pack | Type | Part no. | Std. pack |
|---|---|---|---|---|---|---|
| **Shielded cable terminals** | SK 5-11 | Z2.803.0228.0 | 10 | | | |
| | SK 9,5-13,5 | Z2.803.0328.0 | 10 | | | |
| | SK 12,5-16,5 | Z2.803.0428.0 | 10 | | | |
| | SK 15,5-20,5 | Z2.803.2228.0 | 10 | | | |
| | SK 19-27 | Z2.803.2328.0 | 10 | | | |
| | SK 26-34 | Z2.803.2428.0 | 10 | | | |
| **Accessories** | | | | | | |
| 1. Mounting rail (galvanized steel) L = 2 m | | | | | 98.400.0000.0 | 1 |
| 2. Mounting feet Color: light gray | | | | | | |
| 3. Ground terminal | | | | | | |

# selos



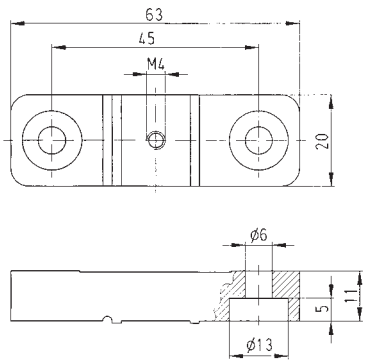


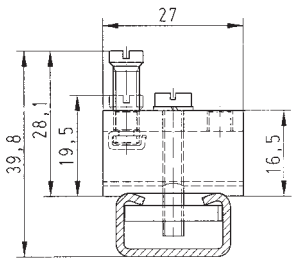


Ground terminal for mounting rail.
Clamping body: nickel plated copper alloy

Rated cross section: 16 mm²
rated wire guage
stranded: 10 – 16 mm² / 6 – 4 AWG
fine stranded: 1.5 – 16 mm² / 18 – 4 AWG

Wire strip length: 11 mm
Width: 8.4 mm

Base: Duroplast, light gray
Female part: brass
Thread: M4

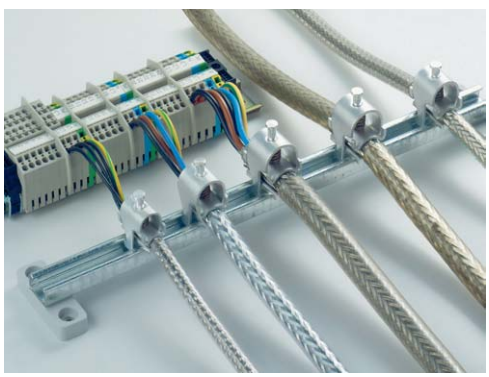

| Type | Part no. | Std. pack | Type | Part no. | Std. pack |
|---|---|---|---|---|---|
| | Z1.980.0040.0 | 10 | | | |
| | | | 9700/10E/1 | Z2.302.1321.0 | 10 |

# Shielded cable terminals, type *SKN*

selos

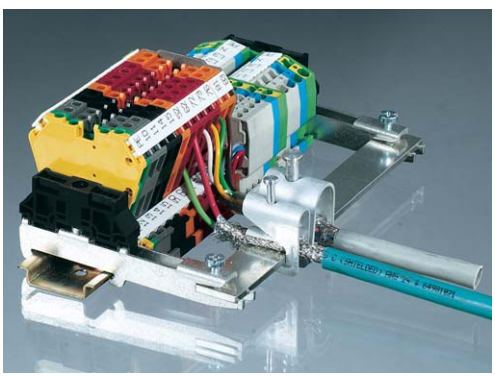

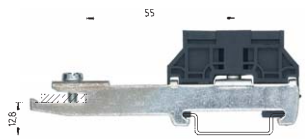


WE SH 1

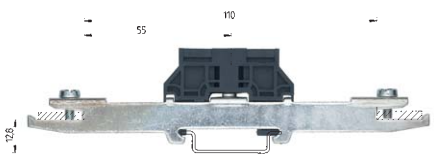


WE SH 2

Material: nickel-plated brass

## SKN...

| Type (shielded cable diameter) | Clamping force | B | L | $H_{max}$ |
|---|---|---|---|---|
| SKN1,5-6,5 | 8-13 N | 10 mm | 25 mm | 33,5 mm |
| SKN5-11 | 22-31 N | 17 mm | 25 mm | 41 mm |
| SKN10-17 | 32-58 N | 23 mm | 25 mm | 57 mm |
| SKN16-24 | 37-53 N | 30 mm | 25 mm | 71 mm |

| | Type | Part no. | Std. pack | Type | Part no. | Std. pack |
|---|---|---|---|---|---|---|
| **Shielded cable terminals** | SKN1,5-6,5 | Z2.803.1328.0 | 10 | | | |
| | SKN5-11 | Z2.803.1428.0 | 10 | | | |
| | SKN10-17 | Z2.803.1528.0 | 10 | | | |
| | SKN16-24 | Z2.803.1628.0 | 10 | | | |
| **Accessories** | | | | | | |
| 1. Busbar support (one-sided), tin-plated steel | | | | WE SH 1/35 | Z5.515.3310.0 | 20 |
| Busbar support (two-sided), tin-plated steel | | | | WE SH 2/35 | Z5.515.3410.0 | 20 |
| Busbar support, plastic Color: black | | | | | | |
| 2. Ground terminal, tin-plated steel Color: green-yellow | | | | | | |
| 3. Busbar, Cu tin-plated 18x3 mm L = 1 m | | | | | | |

# selos

WE SH3

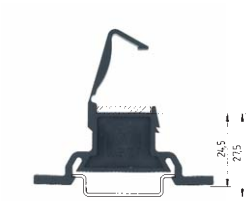


SKN SH/35

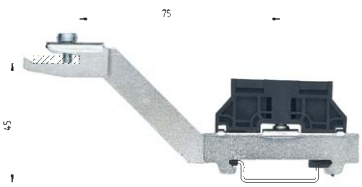


WE SH4

WAK 35/4

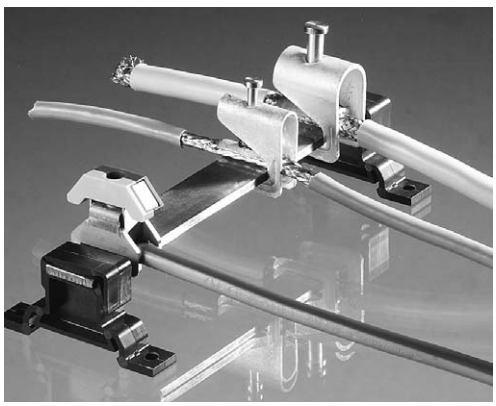

| Type | Part no. | Std. pack | Type | Part no. | Std. pack |
|---|---|---|---|---|---|
| WESH4/35 | Z5.519.0410.0 | 25 | | | |
| WESH3/35 | Z5.519.0310.0 | 25 | | | |
| | | | SKNSH/35/F | Z1.980.0153.0 | 10 |
| | | | WAK35/4GN | 30.494.4210.0 | |
| | | | 18 x 3MSN | 98.291.1000.0 | 10 |

# Busbar components selos

Insulating housing: Polyamide 66/6 - tracking resistant
Clamping body: nickel-plated brass
Wire protection: phosphor bronze
Clamping screws: steel, zinc-plated and dichromated

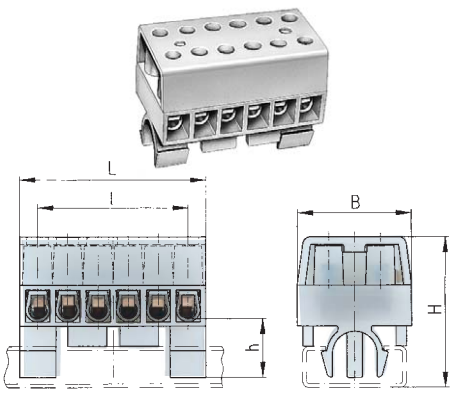


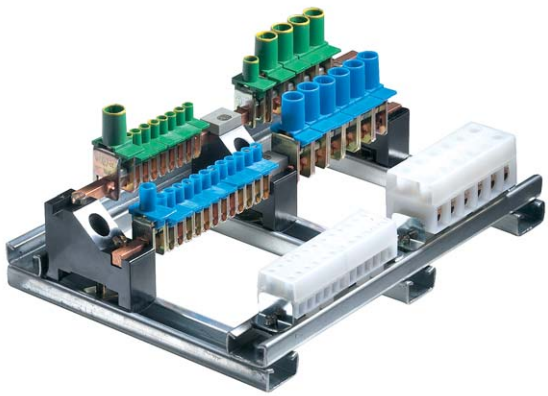

| | L | l | H | h | B |
|---|---|---|---|---|---|
| 4 mm² | 35.9 | 5 x 5.8 = 29 | 29 | 14 | 20 |
| 16 mm² | 64.5 | 5 x 10.5 = 52.5 | 36 | 14 | 27.5 |

Complete sheet-steel distribution systems in accordance with IEC 61 984 and VDE 0108 can be assembled using these components. The widths of the terminals are chosen so that it is easy to identify which terminal is allocated to each individual circuit and so that they match the spacing of the miniature circuit breakers. The PE and N busbar (E-Cu 6 x 6mm) are attached to the busbar mounting brackets. The bare supply and distribution board terminals are pushed onto 6 x 6mm busbars. The PE busbar is attached to the top connection of the bracket and N busbar to the bottom one. The insulate terminals for the phase connections are pushed into the perforated rail from the top. For identifying the individual poles of the
isolated terminals, marker strips are available in rolls numbered in sequences from 1 to 99 for AC circuits and from 101 for DC circuits.

| | V | A |
|---|---|---|
| DIN VDE 0110 | 500 V/6 kV/3 | |

Approvals

| | | Type | Part no. | Std. pack |
|---|---|---|---|---|
| **Terminal block (up to 10 AWG)** | | KL28/6DSPA | 33.011.0653.0 | 50 |
| **Terminal block (up to 4 AWG)** | | KL29/6DSPA | 33.041.0653.0 | 20 |
| **Accessories for N and PE distribution terminals** | | | | |
| 1. PE and N rail carrier with sliding nut | | | | |
| 2. Spacer for separating busbars | | | | |
| 3. Slotted mounting rail | | | | |
| 4. End clamp, 9mm wide | | | | |
| 5. Sliding nut | | | | |
| 6. Jumper bar, insulated for KL28 | 2pole | IVBIK4-2 | Z7.255.0227.0 | 10 |
| | 3pole | IVBIK4-3 | Z7.255.0327.0 | 10 |
| | to 6pole | IVBIK4-6 | Z7.255.0627.0 | 10 |
| 7. Marking stip rolls, 60 m each | | | | |
| for KL 28 and terminal blocks 1-99 Distance | | | | |
| between figures: 6 mm | | | 04.007.1080.0 | 1 |
| for KL 29 and terminal block 1-55 Distance | | | | |
| between figures: 10.8 mm | | | 04.007.3080.0 | 1 |

# selos

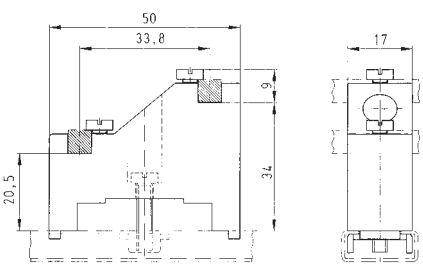


| Type | Part no. | Std. pack | Type | Part no. | Std. pack | Type | Part no. | Std. pack |
|---|---|---|---|---|---|---|---|---|
| | Z1.990.2030.0 | 50 | | | | | | |
| | | | | 05.592.1953.0 | 100 | | | |
| | 98.310.0000.0 | 10 | | | | | | |
| | | | | | | 2163 | Z5.522.1923.0 | 100 |
| | 05.516.9510.0 | 100 | | | | | | |

# Modular N and PE distributor terminals

selos

Material:
Insulated Housing:
Polyamide 66/6

Metal parts:
Steel, zinc plated
dichromated

Bus bar distribution terminals with plastic cover, screw turret, screw break point, and marking ledge.

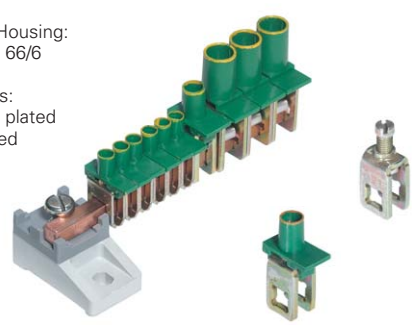

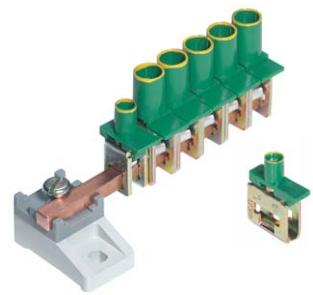

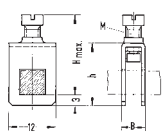

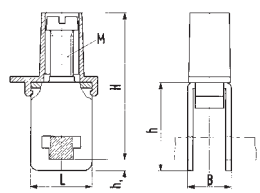

| | H | h | M | B |
|---|---|---|---|---|
| 4 mm² | 23.6 | 16 | M3.5 | 6.0 |
| 16 mm² | 30.8 | 20.2 | M5 | 9.5 |

| | H | h | $h_1$ | L | M | B |
|---|---|---|---|---|---|---|
| 4 mm² | 26 | 16 | 3 | 12 | M3.5 | 6,0 |
| 16 mm² | 33.5 | 20.2 | 3 | 12 | M5 | 10.7 |
| 25 mm² | 41.5 | 23.1 | 2.8 | 16 | M6 | 11.5 |
| 35 mm² | 44 | 25.2 | 2.8 | 16 | M6 | 14.3 |

EN 60998-2-1

| Approvals | CCA/CH | | | CCA/CH | | |
|---|---|---|---|---|---|---|
| | Type | Part no. | Std. pack | Type | Part no. | Std. pack |
| **Distribution terminal** 4 mm² | WAK4/1 | 30.494.0010.0 | 250 | WAK4/3 | 30.494.0110.0 | 250 |
| **Distribution N terminal** 4 mm² Cap: blue | WAK4/1 bl | 30.494.0010.6 | 500 | WAK4/3 bl | 30.494.0110.6 | 500 |
| **Distribution PE terminal** 4 mm² Cap: green-yellow | WAK4/1 gr-gb | 30.494.0010.7 | 500 | WAK4/3 gr-gb | 30.494.0110.7 | 500 |
| **Distribution terminal** 16 mm² | WAK16/1 | 30.494.1010.0 | 250 | | | |
| **Distribution N terminal** 16 mm² Cap: blue | WAK16/1 bl | 30.494.1010.6 | 250 | | | |
| **Distribution PE terminal** 16 mm² Cap: green-yellow | WAK16/1 gr-gb | 30.494.1010.7 | 250 | | | |
| **Distribution terminal** 25 mm² | | | | WAK25/3 | 30.494.1110.0 | 100 |
| **Distribution N terminal** 25 mm² Cap: blue | | | | WAK25/3 bl | 30.494.1110.6 | 100 |
| **Distribution PE terminal** 25 mm² Cap: green-yellow | | | | WAK25/3 gr-gb | 30.494.1110.7 | 100 |
| **Distribution terminal** 35 mm² | | | | WAK35/3 | 30.494.2510.0 | 100 |
| **Distribution N terminal** 35 mm² Cap: blue | | | | WAK35/3 bl | 30.494.2510.6 | 100 |
| **Distribution PE terminal** 35 mm² Cap: green-yellow | | | | WAK35/3 gr-gb | 30.494.2510.7 | 100 |
| Neutral conductor rail 15x3 mm $I_N$=140A L = 1 m | | | | | | |
| with DIN 85 screws and lock washers | | | | | | |
| | | | | | | |
| | | | | | | |
| without screws and washers | | | | | | |
| | | | | | | |
| | | | | | | |
| Distributor with busbar 6 x 6 mm accord. to A802 | | | | | | |
| **Accessories** | | | | | | |
| 1. Rail carrier base | KS011/1ZKR | 19.230.0040.0 | 65 | KS011/1ZKR | 19.230.0040.0 | 65 |
| 2. Busbar 6 x 6 mm E-Cu $I_N$=140A L = 2 m | | 98.320.0000.0 | 1 | | 98.320.0000.0 | 1 |
| 3. Busbar 6 x 6 mm E-Cu $I_N$=140A L = 1 m | | 98.325.1000.0 | 1 | | 98.325.1000.0 | 1 |
| 4. Busbar 10 x 3 mm E-Cu $I_N$=140A L = 1 m | | | | | 98.290.0000.0 | 1 |
| | | | | | | |
| | | | | | | |
| | | | | | | |
| | | | | | | |
| Marking stip rolls, 60 m each | | | | | | |
| for KL 28 and terminal blocks 1-99 Distance between figures: 6 mm | | 04.007.1080.0 | 1 | | | |
| for KL 29 and terminal blocks 1-55 | | 04.007.3080.0 | 1 | | 04.007.1080.0 | 1 |
| Distance between figures: 10.8 mm | | | | | | |
| | | | | | 04.007.3080.0 | 1 |

# selos

Bus Bar: brass
Scres and lock washer:
Steel, zinc plated
dichromated

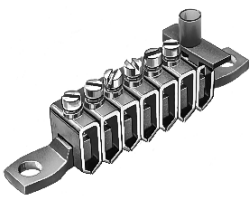

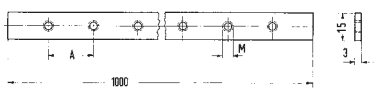


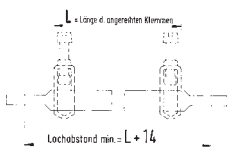


E-Cu
Metal parts:
steel, galv. zinc-plated
and dichromated
Plastic cap
Polyamide 66/6

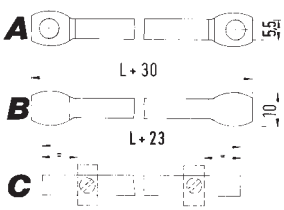


| | measure in mm | |
|---|---|---|
| | A | M |
| FKK18/2... | 9 | 4 |
| FKK18/3... | 11.4 | 5 |
| FKK18/1... | 20 | 5 |

Standard neutral conductor rail screws can be used to fasten the neutral conductor rail. Cross section of threaded holes to measure Ø 5.3 mm.

| Type | Part no. | Std. pack | Type | Part no. | Std. pack |
|---|---|---|---|---|---|
| | | | | | |
| | | | | | |
| | | | | | |
| | | | | | |
| | | | | | |
| | | | | | |
| | | | | | |
| | | | | | |
| | | | | | |
| | | | | | |
| | | | | | |
| | | | | | |
| | | | | | |
| FFK18/2Z | Z2.220.0321.0 | 10 | | | |
| FFK18/3Z | Z2.220.0421.0 | 10 | | | |
| FFK18/1Z | Z2.220.0121.0 | 10 | | | |
| FFK18/2 | 02.220.0321.0 | 1 | | | |
| FFK18/3 | 02.220.0421.0 | 10 | | | |
| FFK18/1 | 02.220.0121.0 | 1 | | | |
| | | | upon request | | |
| | | | | | |
| KS011/1ZKR | 19.230.0040.0 | 65 | KS011/1ZKR | 19.230.0040.0 | 65 |
| | | | | | |
| | | | | | |
| | | | | | |
| | | | | | |
| | | | | | |
| | | | | | |
| | | | | | |
| | | | | | |
| | | | | | |
| | | | | | |
| | | | | | |
| | | | | | |

# Plug-able rail mount terminal with screw technology

# selos

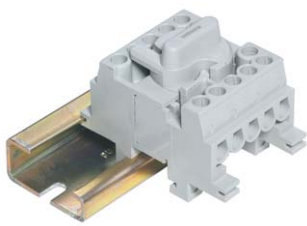

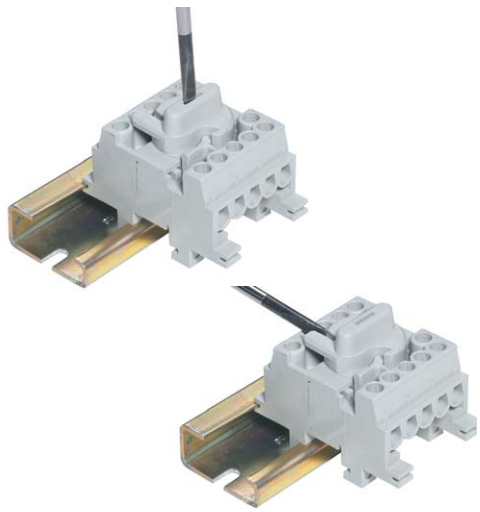

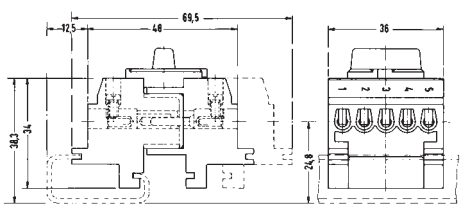


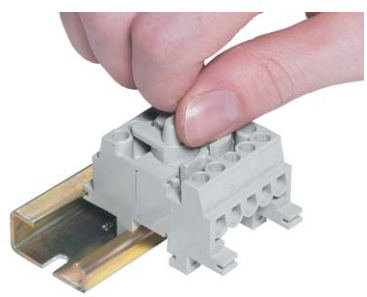

## ST 25/5...

| | fine stranded | solid | V | A |
|---|---|---|---|---|
| EN 60 998-2-1/VDE 0613 T2-1 | 2.5 mm² | 2.5 mm² | 250 V/4 kV/3 | 16 |
| UL-ratings | No. 22-12 | AWG | 300 V | 20 |
| CSA ratings | No. 22-14 | AWG | 300 V | 16 |
| Wire strip length | | | | 5.5 mm |

Approvals

| | | Type | Part no. | Std. pack |
|---|---|---|---|---|
| **Plug-able connector** | | ST 25/5 B | 93.031.2055.0 | 50 |
| **Rail mount socket** | | | | |
| **Plug-able connector w/locking lever** | | ST 25/5 SV | 93.032.2455.0 | 50 |
| **Plug-able connector without locking lever** | | ST 25/5 S | 93.032.2055.0 | 50 |
| **Plug-able connector and rail mount socket** | | | | |
| | | | | |
| **Accessories** | | | | |
| 1. Mounting rail TS 35, DIN rail 7.5mm high | L = 2 m | 35 x 27 x 7,5 EN 60715 | 98.300.0000.0 | 1 |
| Mounting rail TS 35, DIN rail 1.5mm high | L = 2 m | 35 x 24 x 15 EN 60715 | 98.360.0000.0 | 1 |
| Mounting rail TS 32 G rail | L = 2 m | 9006 EN 60715 G-32 | 98.190.0000.0 | 1 |
| 2. End clamp with U-foot | 10 mm wide | WE 1/U | Z5.523.5753.0 | 100 |
| End clamp TS 35, with screw | 8 mm wide | 9708/2 S 35 | Z5.522.8553.0 | 100 |
| End clamp TS 32, with screw | 7.5 mm wide | 9708 | Z5.522.7053.0 | 100 |
| | | | | |
| | | | | |
| | | | | |
| | | | | |
| | | | | |
| | | | | |
| | | | | |
| | | | | |
| 3. Jumper comb for 5 poles (E-Cu) | | VB 11/2 | 07.250.2527.0 | 50 |
| | | | | |
| | | | | |
| | | | | |
| Mounting bracket for C rail | M4 and M6 | | | |
| Mounting base for DIN rail | M3 thread | | | |
| | M4 thread | | | |
| | M5 thread | | | |
| | M6 thread | | | |
| Tear-off coding pieces with 10 coding pieces each | | | | |
| Marking peg (white Polyamide) unmarked | | BZ 12 | 04.232.0051.0 | 5000 |
| Marking peg (white Polyamide) marked | | BZ 12 B | 04.832.0051.0 | 5000 |
| For marking accessories see pages 178-183 | | | | |

Material:

Insulating housing: fibreglass reinforced Polyamide – tracking resistant

Plug and socket contact: brass, surface treated

Clamping screws: steel, zinc-plated and dichromated

Locking device screws: thermoplastic

The terminal connections have a friction lock to prevent the screws from becoming loose as well as wire protection.

This plug-in connector is available with or without locking levers which operate automatically when connection is made. The connector can be separated either using a screwdriver held in a verticle or horizontal position or by hand.

When operating the connector, the interlocking device acts as a control curve, which separates the two halves of the connector. The individual parts of the connector are identified by embossed consecutive numbers (1 to 5). Each 5 pole block can be identified using a marking plug.

# Compact plug-able connector with coding capability

selos

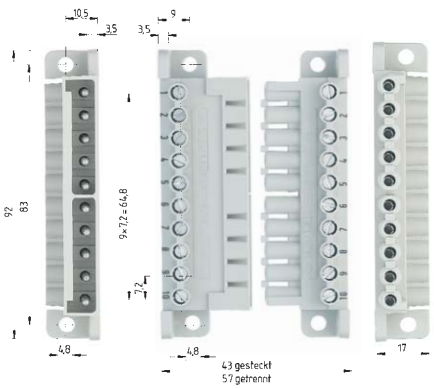


Mounting options: dis-connected
Panel mount or rail mount

**Coding diagram for Wieland compact connector type ST 28/10**

The plug and socket sections of the compact plug connector each have 8 slots for the coding bar. To do this, a coding piece is inserted in the socket section at the points marked with "B". Likewise, a coding piece is inserted in the plug section at the points marked "S". The best way to code the parts is to separate the plug and socket sections and push the coding bars into the coding slots now facing each other as shown in the diagram.

Then reconnect the socket sections.

The coding bars are supplied in batched of 10 which are connected together to facilitate insertion.

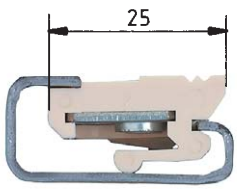


Width 11.5 mm TS M 4/M 6-32

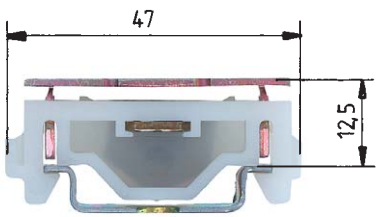


Width 12 mm TS M ... S 35

| fine stranded | solid | V | A |
|---|---|---|---|
| 2.5 mm² | | 400 V/6 kV/3 | 16 |
| No. 22-12 | AWG | 300 V | 20 |
| No. 22-14 | AWG | 300 V | 16 |
| | | | 5.5 mm |

VDE-PB

| Type | Part no. | Std. pack |
|---|---|---|
| ST 28/10 B | 93.001.1055.0 | 10 |
| ST 28/10 S | 93.002.1055.0 | 10 |
| | | |
| | | |
| ST 28/10 BS | 93.003.1055.0 | 10 |
| | | |
| | | |
| 35 x 27 x 7,5 EN 60715 | 98.300.0000.0 | 1 |
| 35 x 24 x 15 EN 60715 | 98.360.0000.0 | 1 |
| | | |
| WE 1/U | Z5.523.5753.0 | 100 |
| | Z5.522.8553.0 | |
| | 05.594.5153.0 | 100 |

Coding:

| | | |
|---|---|---|
| S B B B | B B B S | 1. configuration |
| S B B B | B B S B | 2. configuration |
| S B B B | B S B B | 3. configuration |
| S B B B | S B B B | 4. configuration |
| S B B S | B B B B | 5. configuration |
| S B S B | B B B B | 6. configuration |
| S S B B | B B B B | 7. configuration |
| B S B B | B B B S | 8. configuration |
| B S B B | B B S B | 9. configuration |
| B S B B | B S B B | 10. configuration |
| B S B B | S B B B | 11. configuration |
| B S B S | B B B B | 12. configuration |
| B S S B | B B B B | 13. configuration |
| B B S B | B B B S | 14. configuration |
| | | etc. |

| Type | Part no. | Std. pack |
|---|---|---|
| TS M 4/M 6-32 | 69.332.0000.0 | 100 |
| TS M 3 S 35 | 69.335.0253.0 | 100 |
| TS M 4 S 35 | 69.335.0453.0 | 100 |
| TS M 5 S 35 | 69.335.0553.0 | 100 |
| TS M 6 S 35 | 69.335.0653.0 | 100 |

# Modular panel mount terminals with solder/push-on connectors

**selos**

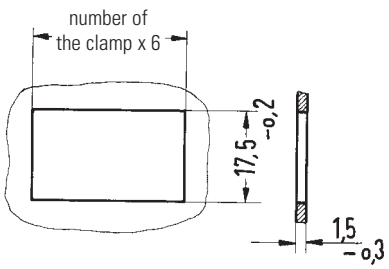


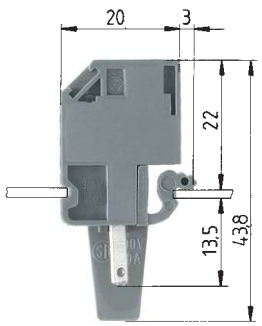


Solder tab connector 2.8 x 0.8 mm for push-on connector B 2.8 x 1 accord. to DIN 46247 Bl. 1

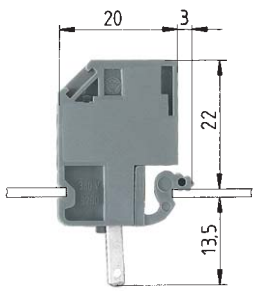


Solder tab connector 2.8 x 0.8 mm for push-on connector B 2.8 x 1 accord. to DIN 46247 Bl. 1

| | | fine stranded | solid | V | A | fine stranded | solid | V | A |
|---|---|---|---|---|---|---|---|---|---|
| EN 60 947-7-1/DIN VDE 0611 T1 | | 0.5 - 2.5 mm² | 0.5 - 2.5 mm² | 400 V/4 kV/3 | 10 | 0.5 - 2.5 mm² | 0.5 - 2.5 mm² | 400 V/4 kV/3 | 10 |
| UL-ratings | | No. 22-12 AWG | | 150 V | 20 | No. 22-12 AWG | | 150 V | 20 |
| CSA ratings | | No. 22-14 AWG | | 300 V | 10 | | | | |
| Width | Wire strip length | 6 mm | | | 8 mm | 6 mm | | | 8 mm |
| Approvals | | | | | | | | | |

| | | Type | Part no. | Std. pack | Type | Part no. | Std. pack |
|---|---|---|---|---|---|---|---|
| **Panel mount terminal** | | 9290 S | 59.900.2552.0 | 200 | | | |
| **Panel mount terminal** | without partition | | | | 9290 L | 59.900.2052.0 | 200 |
| - Color: blue - | for EEx i installations | | | | 9290 L BLAU | 59.900.2053.6 | 200 |

For marking systems see pages 178-183 and 250-251

# selos

# IDC DIN rail terminal blocks, type *WKC*

# *taris*

**IDC connection for:**

**Standard DIN rail terminal blocks**

**Duo terminal blocks**

**Multi-tier terminal blocks**

**Disconnect blocks**

***taris*** connects copper wires **easily, fast** and **safely**

***taris*** for TS 35

- no wire stripping, no ferrules
- no special tools - a screwdriver is all you need
- 60 % time savings = reduced costs
- low packing density (5 mm wide)
- optical control of the switching state
- cross sections up to 1.0 $mm^2$ and 2.5 $mm^2$

All Wieland Components which require CE general certification are CE certified, and identified with the CE logo.

taris

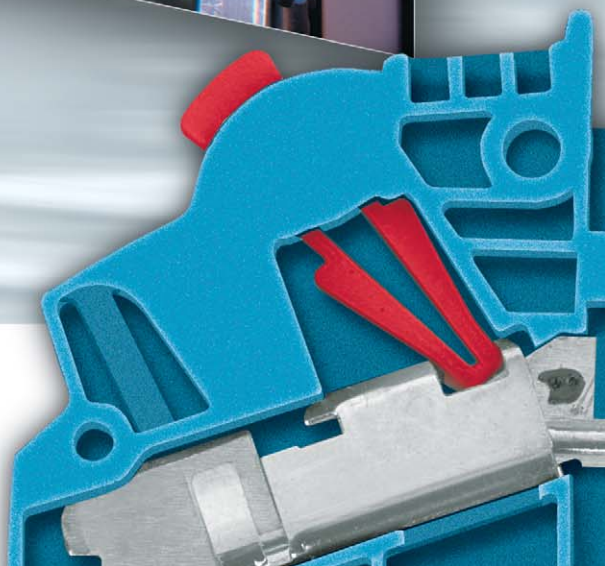

# IDC DIN rail terminal blocks

type *WKC*

# IDC DIN rail terminal blocks, type *WKC*

**taris**

| | 1.0 mm² | 2.5 mm² |
|---|---|---|
| Feed-through blocks | 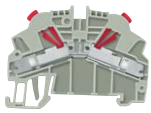 | 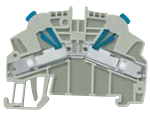 |
| Neutral feed-through blocks | 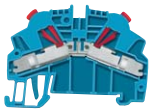 | |
| Ground blocks | 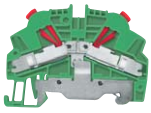 | 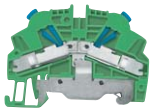 |

taris

## Standard DIN rail terminal blocks

| | 1.0 mm² | 2.5 mm² |
|---|---|---|
| Feed through blocks | | |
| Ground blocks | 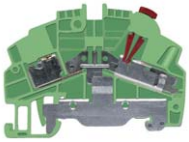 | |

taris

## Hybrid DIN rail terminal blocks

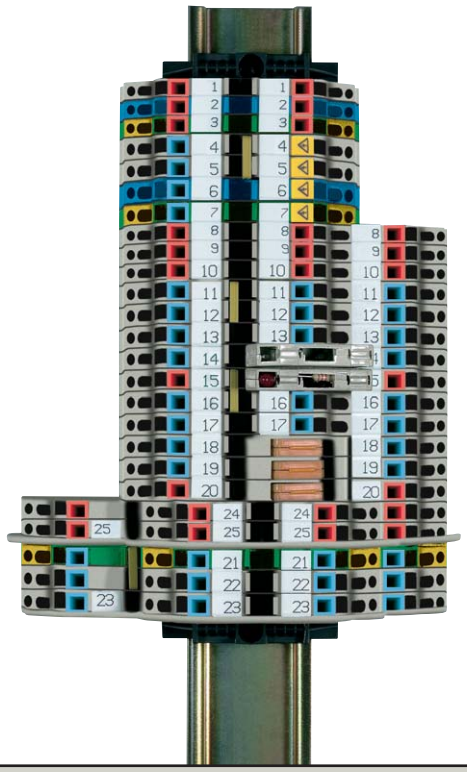

| | 1.0 mm² | 2.5 mm² |
|---|---|---|
| Double-tier block | 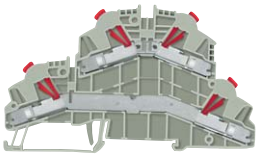 | 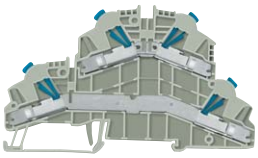 |
| Double-tier blocks as function blocks, possible diode switches upon request | | 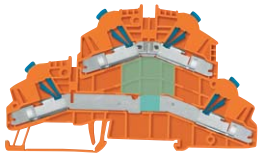 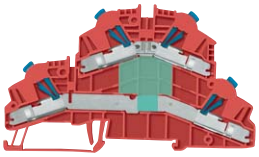 |

taris

## Double-tier blocks

## Duo 1/2

| | 1.0 mm² | 2.5 mm² |
|---|---|---|
| Feed-through blocks | 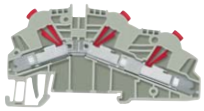 | 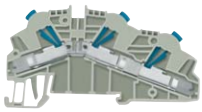 |
| Neutral feed-through blocks | 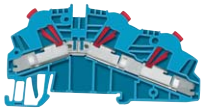 | 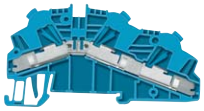 |
| Ground blocks | 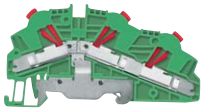 | 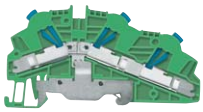 |

## Duo 2/2

| | 1.0 mm² | 2.5 mm² |
|---|---|---|
| Feed-through blocks | 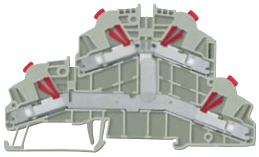 | 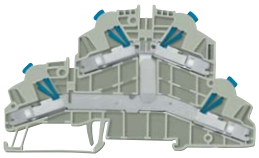 |
| Neutral feed-through blocks | 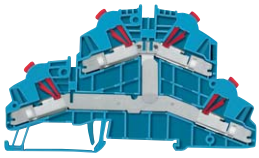 | 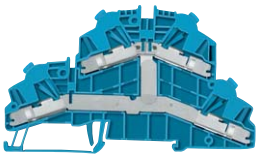 |
| Ground blocks | 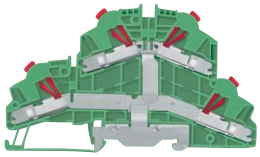 | 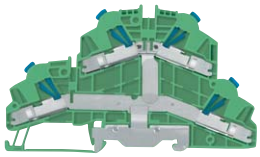 |

## Duo DIN rail terminal blocks

## Disconnect blocks

| | 1.0 mm² | 2.5 mm² |
|---|---|---|
| Knife edge disconnect blocks | | |
| Disconnect blocks with fuse plug | | |
| Disconnect blocks with diode plug | 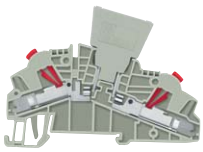 | |

# IDC DIN rail terminal blocks
## type *WKC*
# *taris*

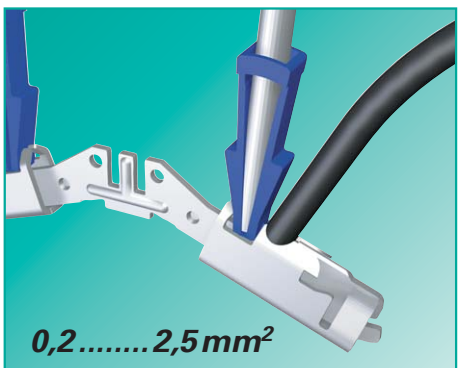


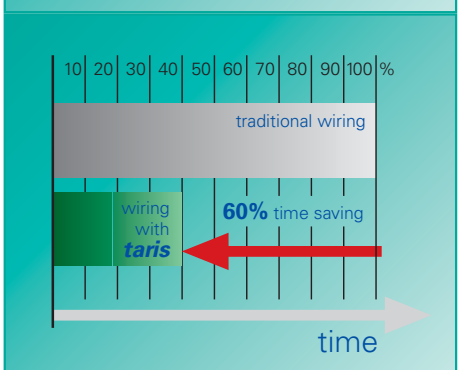


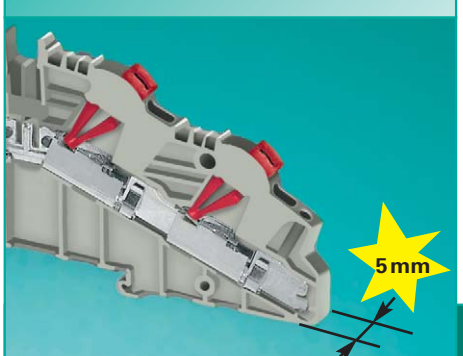


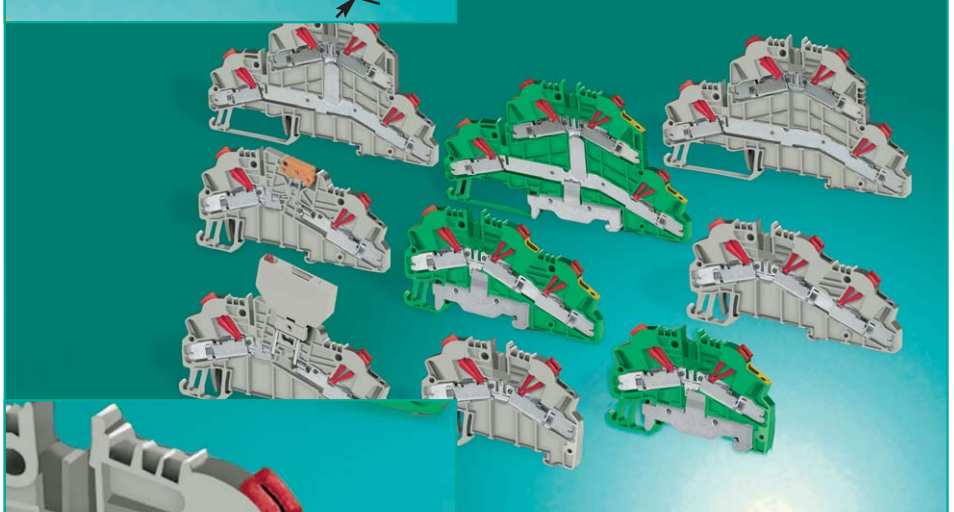

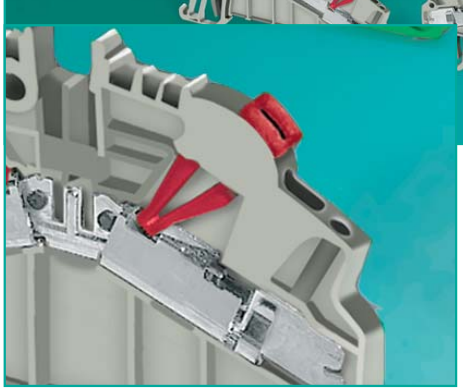

### *taris* technology

❒ Wieland's ***taris*** (WKC) Series represents the industry's most comprehensive line of advanced IDC (insulation displacement contact) technology terminal blocks. The superior design of the ***taris*** IDC contact system reduces wiring installation time and labor, expecially in high volume wiring applications. ***taris*** IDC terminal blocks are suitable for applications in automated equipment and machine tools, packaging and material handling machinery, railway/mass transit sytems, petrochemical, and any applications requiring high-volume interconnects for low-voltage control and signal cicuitry where labor cost reduction and ease of assembly is a goal.

### *taris* features

❒ The industry's narrowest blocks at just 5 mm and 6 mm wide

❒ Operates with a standard screwdriver

❒ Dual jumpering slots

❒ Built-In test points

❒ Contact design moves the clamp to engage the wire

❒ Top-entry system puts the wire entry and the screwdriver access in the same plane

❒ Tin-plated copper alloy contact material

❒ UL 94-VO non-flammability rating on the polyamide 66/6 insulation material

### benefits ....

→ uses less space in the cabinet

→ No special tools required

→ Flexibility in commoning potentials of adjacent blocks

→ Provide true measurement reading without removing wires

→ Ensures secure, gas-tight and vibration-resistant connection even when the wire length is maxed out

→ Easy circuit identification and trouble-shooting

→ Corrosion resistant connection

→ Increased safety

→ Easy installation even in confined spaces

❒ ***taris*** is designed for long-term use under demanding conditions

### WKC series terminal block versions

❒ Feed-through

❒ Ground

❒ Disconnect

❒ Fuse

❒ Arc suppression

❒ Reverse polarity protection

❒ 1-in, 2-out feed-through

❒ 1-in, 2-out ground

❒ Double-tier feed-through

❒ Double-tier ground

❒ Voltage indication

# taris

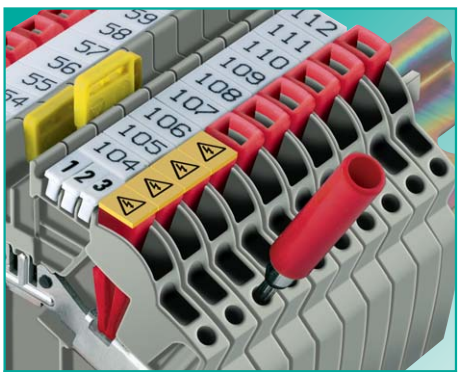

### Test plug

- All ***taris*** IDC DIN rail terminal blocks feature built in test points so that measuring values can be taken without removing the wire.
- Entry guides on each side of the blocks permit measuring with standard 2.3 mm test probes and test plugs for easy maintenance and trouble-shooting

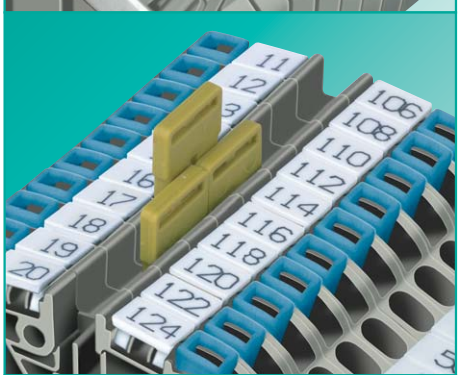

### Cross connection

- IVB WKF insulated cross connectors offer complete protection from shock-hazard per EN 60352-3/4 and EN 60947-7-1.
- Partition plates between neighboring cross connections are not necessary to meet creepage requirements.
- IVB WKF cross connecotrs bear the same rated current as the terminal block

### Marking facilities

- single marking tags
- Snap=On marking strips
- Tear-off marking stripsl
- Custom marking options

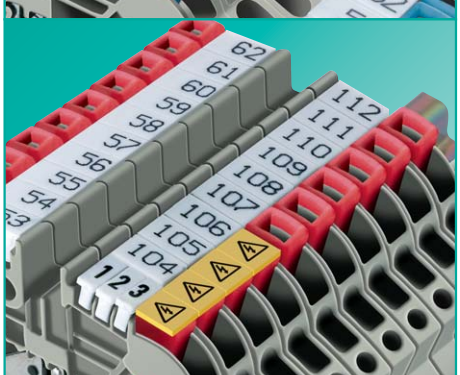

### ADC warning cover

- ***taris*** offers a Sanp-On cover with the ADC warning symbol to prevent tampering of blocks which remain live after the system is switched off.  A tool is required to remoce the cover for added safety.

### DQS certificates for all products

- Quality standard as per DIN ISO 9001 in Development, Production, Assembly
- Continued control of the quality standard by means of regular internal and external quality audits
- Compatible with certificates of other countries:
  - BSI Certificate, Great Britain
  - SQS Certificate, Switzerland
  - Aib-Vincotte Certificate, Belgium
  - ÖQS Certificate, Austria

### *taris* material

- taris utilizes special alloys and surface treatments to provide low contact resistance and a high degree of protection from corrosion. ***taris*** material composition makes it suitable for use under extreme conditions and guarantees a long-term stable connection.

### *taris* metal compositions

- clamping body and current bar constructed of tin-plated copper
- ground foot is contructed of tin-plated brass

### *taris* insulating housing compositions

- housings are constructed of polyamide 6.6 for its excellent mechanical, electrical and chemical properties
- UL 94-VO non-flammability rating, the best in the industry

(see also section ***facts*** & DATA)

Our ***wieplan*** software helps to plan your DIN rail terminal block assemblies (see page 10/11).

### Note

The information regarding cross-sectional areas and connection types pertains to wires without ferrules. Ferrules are not neccessary for secure connection.

The voltage ratings apply to the terminals in their intended application. When different products are mounted adjacent to each other, the proper isolation distances must be adhered to. For this purpose, **Wieland** offers a large selection of appropiate accessories.

A detailed description of technical data, the standards requirements, and the application conditions can be found in catalog section ***facts*** & DATA.

# Concept

# taris

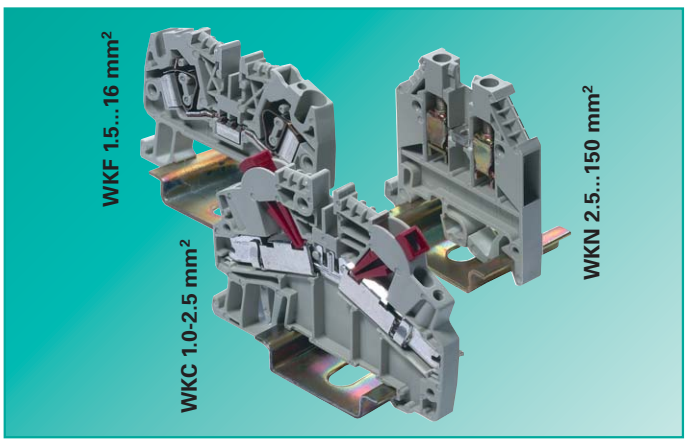


***taris***

With the addition of ***taris*** IDC terminal blocks, Wieland now offers the broadest range of screw clamp, spring clamp. and IDC technology, to provide the best possible connection for any control cabinet application. At just 5mm and 6mm wide, the ***taris*** series includes the industry's narrowest IDC block capable of accepting 14 AWG. Like other Wieland products, ***taris*** is designed with superior function and quality in mind, thereby offering the most features and benefits of any terminal block on the market. To lower production costs or reduce installation and maintenance time, Wieland's ***taris*** WKC series terminal blocks offer the connection technology you need.

**The 2-second connection**

**Terminating copper wires is easy, fast and safe with *taris*.**

- **Easy** – Cut the wire to length and insert into the wire entry guide. Move the clamping body into the wire by inserting and levering a standard flat screwdriver
- **Fast** – There is no prep time with ***taris*** - no wire stripping and no ferruling. ***taris*** reduces installation time by as much as 60%.
- **Safe** – the wire does not move during the operation - no risk of losing the wires. No live parts are able to be touched due to the design of the insulating housing. Jumpers are isulated as well.

***taris* makes disconnecting wires just as easy, fast and safe.**

- It is possible to re-use spliced wires with ***taris*** by cutting the end of the wire before each new/re-termination
- After connecting a larger wire, a smaller diameter wire can be connected to the same contact.

A color-coded screwdriver guide indicates the rated cross section of the terminal block:

- WKC 1 30-18 AWG red indicator
- WKC 2.5 18-14 AWG blue indicator

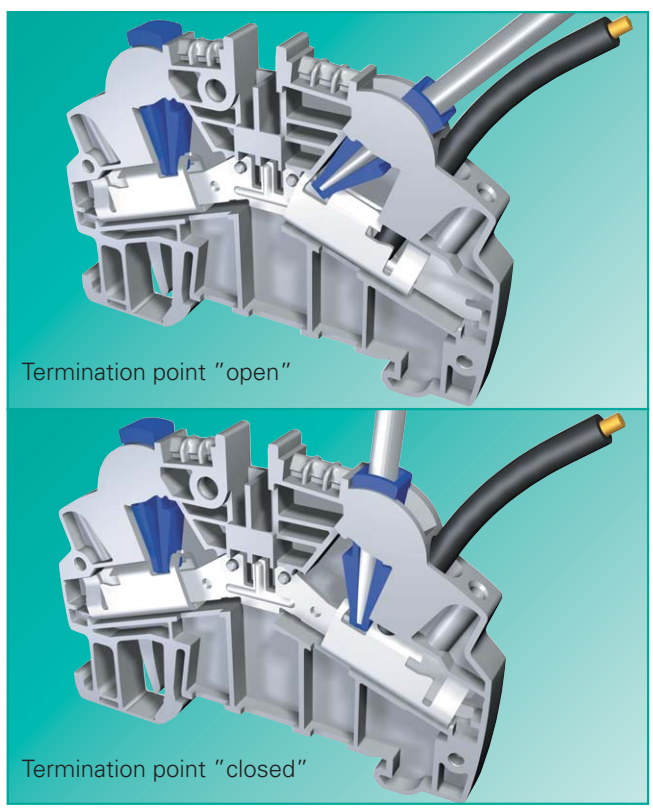

**Wire specifications**

***taris*** terminates solid or fine stranded copper wires with AWG between 24 and 14 with two size of terminal blocks.

WKC ...1 : copper wire between AWG 24-18; 5mm wide terminal block
WKC ...2,5: copper wire between AWG 18-14; 6mm wide terminal block

Standard control wire with PVC- and PE- insulation can be terminated

Wire with other insulation material can also be terminated, please consult Wieland for recommendation

For fine stranded copper wires, the wire diameter must be a minimum of 0.2mm. the composition of conductors is based on DIN VDE 0295

K1, 1-5.

# taris

### Wire connection

Insert the wire into the clamping body through the wire entry guide.Insert a flat screwdriver into the colored screwdriver guide and push the screwdriver forward to move the clamping body into the wire. This action cuts into the insulation of the wire at two defined points with proper contact and no damage to the copper wire. The result is a gas tight, vibration and corrosion resistant contact.

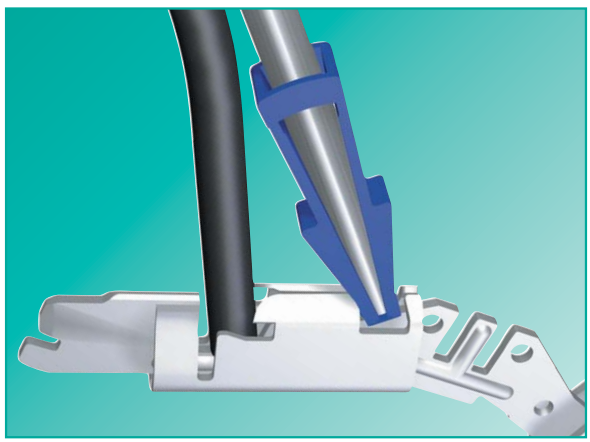



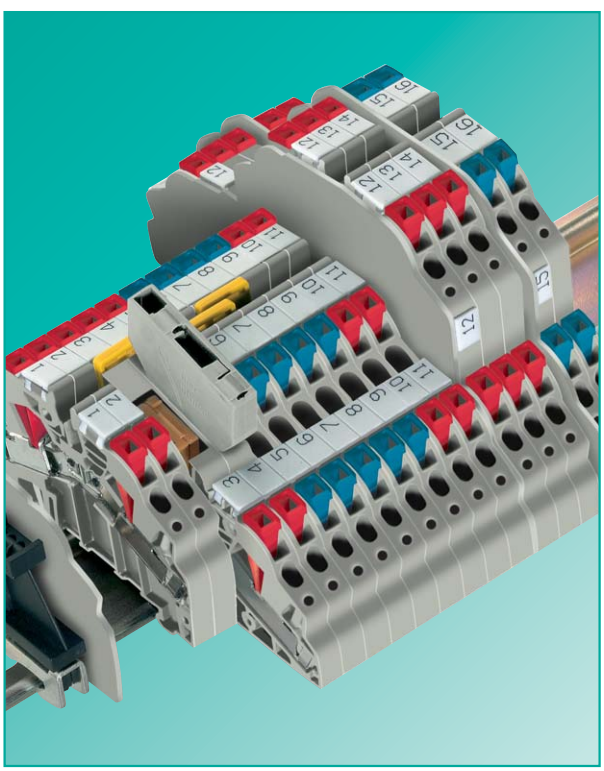

### The *taris* series

For variuos application requirements, ***taris*** offers a variety of terminal blocks in two different ranges of AWG cross sections. Both cross sections have the same contour outside for a clean symmetrical look along the DIN rail.

Standard terminals

- DIN rail terminal blocks as feed-through and ground blocks with one termination point on each side of the terminal block
- DIN rail terminal blocks with two jumpering slots provide flexibility in commoning potentials
- DIN rail terminal blocks with marking facilities on every termination point
- DIN rail terminal blocks with test points for test probes on every termination point

Duo terminals

- Duo DIN rail terminal blocks with more than two termination points for one potential
- Duo DIN rail terminal blocks as feed-through and ground blocks in D 1/2 and D2/2 version
- Duo DIN rail terminal blocks D 1/2 can be jumpered with the standard DIN rail terminal blocks

Disconnect terminals

- as knife edge disconnect blocks or disconnect blocks for diode or fuse plugs
- can be jumpered with standard or Duo 1/2 DIN rail terminals.

Double-deck rail terminals

- double-tier blocks with same contour as Duo 2/2 blocks.
- double-tier blocks as function block for diode switchings

### Accessories

- ***taris*** utilizes Wieland's standard marking system
- ***taris*** utilizes the same insulated cross connectors as Wieland's WKF series spring clamp connection technology for potential commoning.
- For more complex connections, ***taris*** uses the disconnect block with fuse plug SIST or diode plug DIST for WK or WKF series.
- For visual separation of termainl block groups, ***taris*** offers partitions and end plates, which also maintain shock-hazard protection.
- taris features built-in test points which accomodate Wieland test plugs or test probes from standaed meters for way maintenance and trouble-shooting.

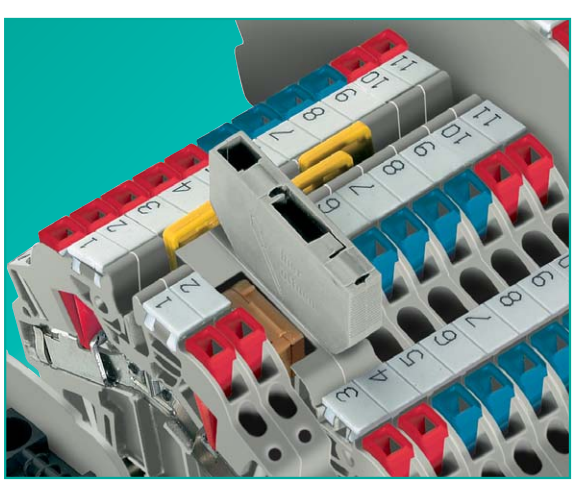

# IDC DIN rail terminal blocks, type *WKC*

taris

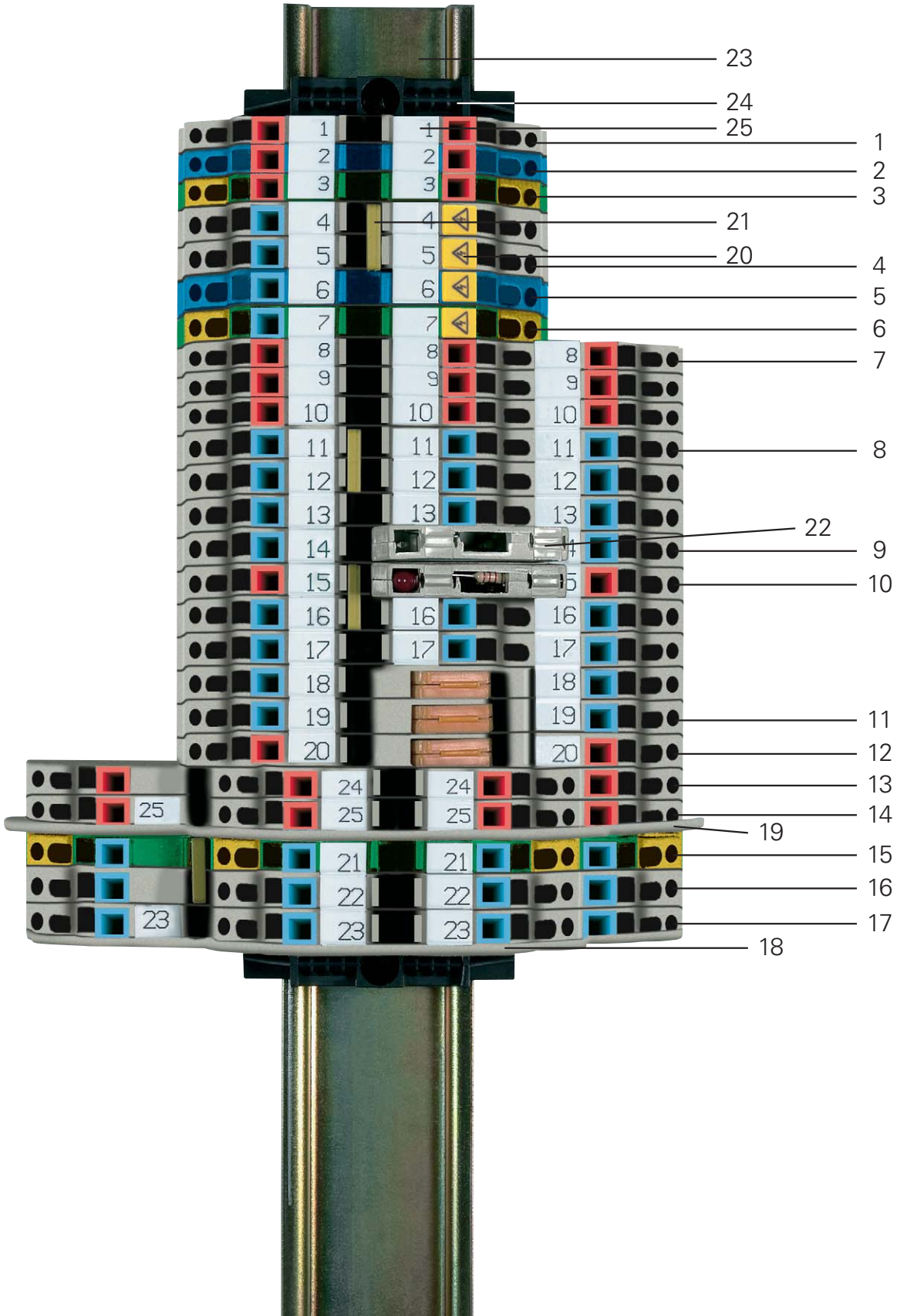

# *taris* sample rail

taris

| Pos. | Description | Type | Part no. |
|---|---|---|---|
| 1 | Feed-through block | WKC 1/35 | 56.301.0053.0 |
| 2 | Feed-through block, blue | WKC 1/35 BLAU | 56.301.0053.6 |
| 3 | Ground block | WKC 1 SL/35 | 56.301.9053.0 |
| 4 | Feed-through block | WKC 2,5/35 | 56.303.0053.0 |
| 5 | Feed-through block, blue | WKC 2,5/35 BLAU | 56.303.0053.6 |
| 6 | Ground block | WKC 2,5 SL/35 | 56.303.9053.0 |
| 7 | Duo feed-through block | WKC 1 D1/2/35 | 56.301.5053.0 |
| 8 | Duo feed-through block | WKC 2,5 D1/2/35 | 56.303.5053.0 |
| 9 | Disconnect block | WKC 2,5 TKG/35 | 56.303.4053.0 |
| 10 | Disconnect block | WKC 1 TKG/35 | 56.301.4053.0 |
| 11 | Knife edge disconnect block | WKC 2,5 TKM/35 | 56.303.2053.0 |
| 12 | Knife edge disconnect block | WKC 1 TKM/35 | 56.301.2053.0 |
| 13 | Duo feed-through block | WKC 1 D2/2/35 | 56.301.5153.0 |
| 14 | Double-tier block | WKC 1 E/35 | 56.301.7053.0 |
| 15 | Duo-ground block | WKC 2,5 D2/2/SL/35 | 56.303.9153.0 |
| 16 | Duo-feed-through block | WKC 2,5 D2/2/35 | 56.303.5153.0 |
| 17 | Double-tier block | WKC 2,5 E/35 | 56.303.7053.0 |
| 18 | End plate | APC 1-2,5 D2./E. | 07.312.5453.0 |
| 19 | Partition plate | TWC 1-2,5 D2./E. | 07.312.5553.0 |
| 20 | Cover with warning symbol | ADC 2,5 GELB | 04.344.0353.8 |
| 21 | Jumper bar, insulated | IVB WKF 4-2 | Z7.261.1227.0 |
| 22 | Fuse plug (G 5x20) | SIST | Z1.299.4053.0 |
| 23 | Mounting rail | 35x27x7,5 EN 60715 | 98.300.0000.0 |
| 24 | End clamp | 9708/2 S35 | Z5.522.8553.0 |
| 25 | Marking strips | 9705 A/5/10 B | 04.842.5053.0 |

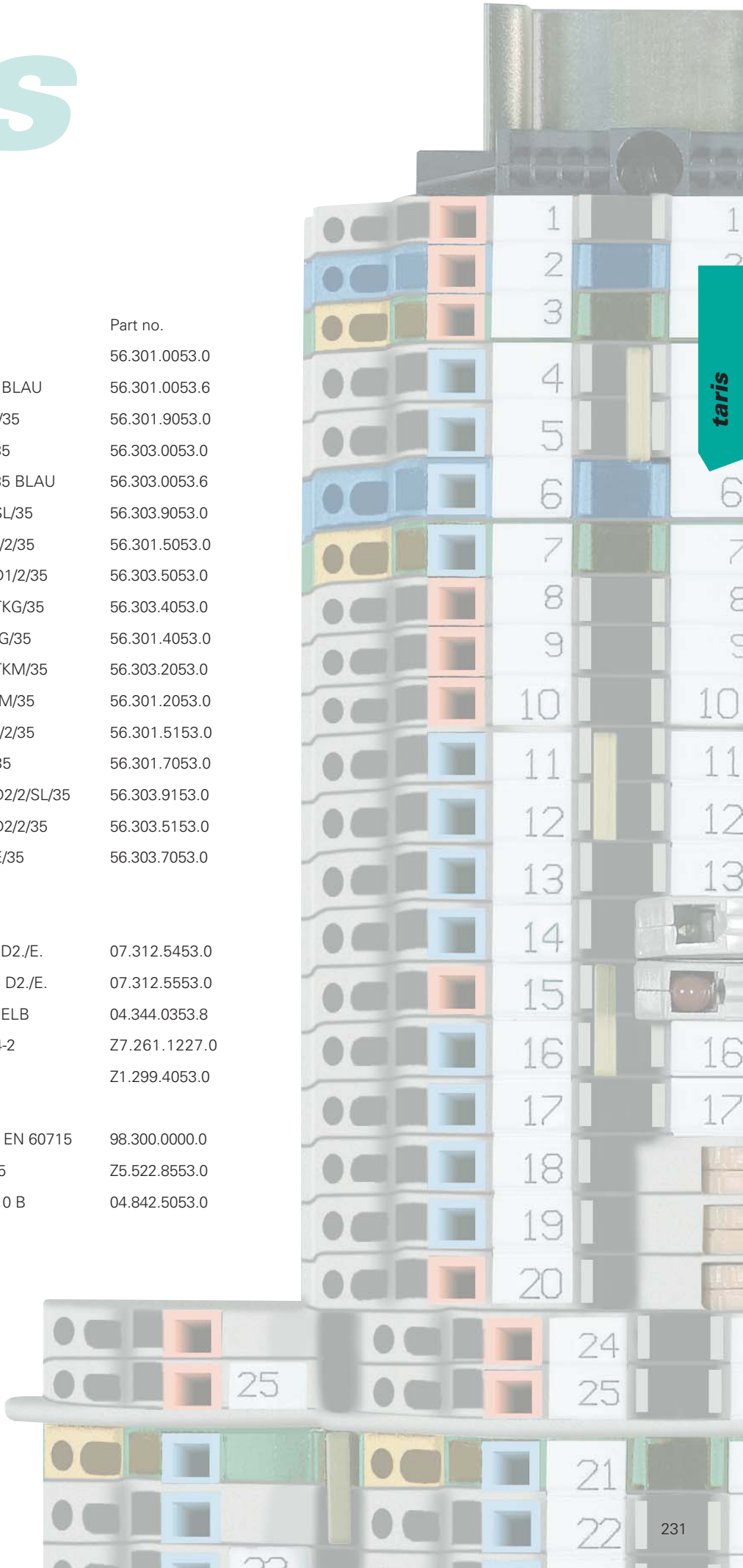

# IDC feed-through blocks, type *WKC*

taris

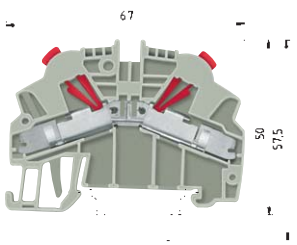


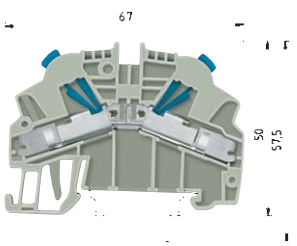


| | | WKC 1/35 | | | | WKC 2.5/35 | | | |
|---|---|---|---|---|---|---|---|---|---|
| | | fine stranded | solid | V | A | fine stranded | solid | V | A |
| EN 60 947-7-1 | | 0.2 – 1 mm² | 0.2 – 1 mm² | 800 V/8 kV/3 | 13.5 | 1 – 2.5 mm² | 1 – 2.5 mm² | 800 V/8 kV/3 | 24 |
| UL ratings | | No. 30-18 AWG | | 600 V | 13 | No. 18-14 AWG | | 600 V | 22 |
| CSA ratings | | No. 24-18 AWG | | 600 V | 13 | No. 16-14 AWG | | 600 V | 20 |
| Width | Rated cross section | 5 mm | | | 1 mm² | 6 mm | | | 2.5 mm² |
| Approvals | | KEMA KEUR, UL, * CSA, ** | | | | KEMA KEUR, UL, * CSA, ** | | | |

| | | Type | Part no. | Std. pack | Type | Part no. | Std. pack |
|---|---|---|---|---|---|---|---|
| **Feed-through block** | Color: gray | WKC 1/35 | 56.301.0053.0 | 100 | WKC 2,5/35 | 56.303.0053.0 | 100 |
| **Feed-through block** | Color: blue | WKC 1/35 BLAU | 56.301.0053.6 | 100 | WKC 2,5/35 BLAU | 56.303.0053.6 | 100 |
| | | | | | | | |
| | | | | | | | |
| **Accessories** | | | | | | | |
| 1. Mounting rail 35, 7.5 mm high | L = 2 m | 35 x 27 x 7,5 EN 60715 | 98.300.0000.0 | 1 | 35 x 27 x 7,5 EN 60715 | 98.300.0000.0 | 1 |
| Mounting rail 35, 15 mm high | L = 2 m | 35 x 24 x 15 EN 60715 | 98.360.0000.0 | 1 | 35 x 24 x 15 EN 60715 | 98.360.0000.0 | 1 |
| 2. End clamp for TS 35 | 8 mm wide | 9708/2 S 35 | Z5.522.8553.0 | 100 | 9708/2 S 35 | Z5.522.8553.0 | 100 |
| End clamp for TS 35, screwless | 8 mm wide | WEF 1/35 | Z5.523.9353.0 | 100 | WEF 1/35 | Z5.523.9353.0 | 100 |
| 3. End plate | Color: gray | APC 1-2,5 | 07.312.5053.0 | 10 | APC 1-2,5 | 07.312.5053.0 | 10 |
| | Color: blue | APC 1-2,5 BLAU | 07.312.5053.6 | 10 | APC 1-2,5 BLAU | 07.312.5053.6 | 10 |
| | Color: green | | | | | | |
| 4. Partition plate | Color: gray | TWC 1-2,5 | 07.312.5153.0 | 10 | TWC 1-2,5 | 07.312.5153.0 | 10 |
| | Color: blue | TWC 1-2,5 BLAU | 07.312.5153.6 | 10 | TWC 1-2,5 BLAU | 07.312.5153.6 | 10 |
| 5. Jumper bar, | 2pole | IVB WKF 2,5-2 | Z7.280.6227.0 | 10 | IVB WKF 4-2 | Z7.261.1227.0 | 10 |
| insulated | 3pole | IVB WKF 2,5-3 | Z7.280.6327.0 | 10 | IVB WKF 4-3 | Z7.261.1327.0 | 10 |
| | 4pole | IVB WKF 2,5-4 | Z7.280.6427.0 | 10 | IVB WKF 4-4 | Z7.261.1427.0 | 10 |
| | 5pole | IVB WKF 2,5-5 | Z7.280.6527.0 | 10 | IVB WKF 4-5 | Z7.261.1527.0 | 10 |
| | 6pole | IVB WKF 2,5-6 | Z7.280.6627.0 | 10 | IVB WKF 4-6 | Z7.261.1627.0 | 10 |
| | 7pole | IVB WKF 2,5-7 | Z7.280.6727.0 | 20 | IVB WKF 4-7 | Z7.261.1727.0 | 20 |
| | 8pole | IVB WKF 2,5-8 | Z7.280.6827.0 | 20 | IVB WKF 4-8 | Z7.261.1827.0 | 20 |
| | 9pole | IVB WKF 2,5-9 | Z7.280.6927.0 | 20 | IVB WKF 4-9 | Z7.261.1927.0 | 20 |
| | 10pole* | IVB WKF 2,5-10 | Z7.280.7027.0 | 20 | IVB WKF 4-10 | Z7.261.2027.0 | 20 |
| 6. Cover w. warning symbol over 4 blocks | | ADC 1 GELB | 04.344.0153.8 | 10 | ADC 2,5 GELB | 04.344.0353.8 | 10 |
| 7. Test plug | | WK 2,5 ST 2/2,3 | Z5.553.2921.0 | 10 | WK 2,5 ST 2/2,3 | Z5.553.2921.0 | 10 |
| 8. Screw driver, uninsulated | | DIN 5264 B 0,6 x 3,5 | 06.502.4000.0 | 5 | DIN 5264 B 0,6 x 3,5 | 06.502.4000.0 | 5 |
| | | | | | | | |
| | | | | | | | |
| | | | | | | | |
| | | | | | | | |
| | | | | | | | |
| | | | | | | | |
| *Available up to 20 pole | | * CL I, ZN1, AExe II | | | * CL I, ZN1, AExe II | | |
| Marking accessories also see page 178-179 and 250-251 | | **CL I, ZN1, Exe II | | | **CL I, ZN1, Exe II | | |

# IDC ground blocks, type *WKC*

taris

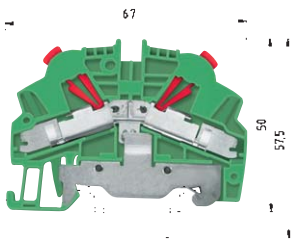


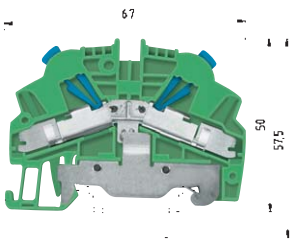


| | | WKC 1 SL/35 | | | | WKC 2,5 SL/35 | | | |
|---|---|---|---|---|---|---|---|---|---|
| | | fine stranded | solid | V | A | fine stranded | solid | V | A |
| EN 60 947-7-2 | | 0.2 – 1 mm² | 0.2 – 1 mm² | 800 V/8 kV/3 | 13.5 | 1 – 2.5 mm² | 1 – 2.5 mm² | 800 V/8 kV/3 | 24 |
| UL ratings | | No. 30-18 AWG | | 600 V | | No. 18-14 AWG | | 600 V | |
| CSA ratings | | No. 24-18 AWG | | | | No. 16-14 AWG | | | |
| Width | Rated cross section | 5 mm | | | 1 mm² | 6 mm | | | 2.5 mm² |
| Approvals | | KEMA KEUR UL * CSA ** | | | | KEMA KEUR UL * CSA ** | | | |

| | | Type | Part no. | Std. pack | Type | Part no. | Std. pack |
|---|---|---|---|---|---|---|---|
| | | | | | | | |
| | | | | | | | |
| **Ground block** | Color: green/yellow | WKC 1 SL/35 | 56.301.9053.0 | 100 | WKC 2,5 SL/35 | 56.303.9053.0 | 100 |
| | | | | | | | |
| **Accessories** | | | | | | | |
| 1. Mounting rail 35, 7.5 mm high | L = 2 m | 35 x 27 x 7,5 EN 60715 | 98.300.0000.0 | 1 | 35 x 27 x 7,5 EN 60715 | 98.300.0000.0 | 1 |
| Mounting rail 35, 15 mm high | L = 2 m | 35 x 24 x 15 EN 60715 | 98.360.0000.0 | 1 | 35 x 24 x 15 EN 60715 | 98.360.0000.0 | 1 |
| 2. End clamp for TS 35 | 8 mm wide | 9708/2 S 35 | Z5.522.8553.0 | 100 | 9708/2 S 35 | Z5.522.8553.0 | 100 |
| End clamp for TS 35, screwless | 8 mm wide | WEF 1/35 | Z5.523.9353.0 | 100 | WEF 1/35 | Z5.523.9353.0 | 100 |
| 3. End plate | Color: gray | | | | | | |
| | Color: blue | | | | | | |
| | Color: green | APC 1-2,5 GRÜN | 07.312.5053.7 | 10 | APC 1-2,5 GRÜN | 07.312.5053.7 | 10 |
| 4. Partition plate | Color: gray | | | | | | |
| | Color: blue | | | | | | |
| 5. Jumper bar, | 2pole | | | | | | |
| insulated | 3pole | | | | | | |
| | 4pole | | | | | | |
| | 5pole | | | | | | |
| | 6pole | | | | | | |
| | 7pole | | | | | | |
| | 8pole | | | | | | |
| | 9pole | | | | | | |
| | 10pole | | | | | | |
| 6. Cover w. warning symbol over 4 blocks | | ADC 1 GELB | 04.344.0153.8 | 10 | ADC 2,5 GELB | 04.344.0353.8 | 10 |
| 7. Test plug | | WK 2,5 ST 2/2,3 | Z5.553.2921.0 | 10 | WK 2,5 ST 2/2,3 | Z5.553.2921.0 | 10 |
| 8. Screw driver, unisoliert | | DIN 5264 B 0,6 x 3,5 | 06.502.4000.0 | 5 | DIN 5264 B 0,6 x 3,5 | 06.502.4000.0 | 5 |
| | | | | | | | |
| | | | | | | | |
| | | | | | | | |
| | | | | | | | |
| | | | | | | | |
| | | | | | | | |
| | | * CL I, ZN1, AExe II | | | * CL I, ZN1, AExe II | | |
| | | **CL I, ZN1, Exe II | | | **CL I, ZN1, Exe II | | |

# IDC duo feed-through blocks, type *WKC*

taris

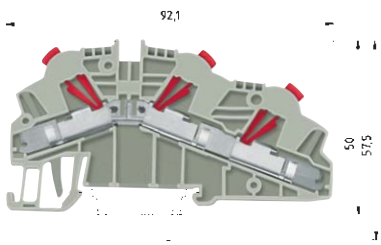


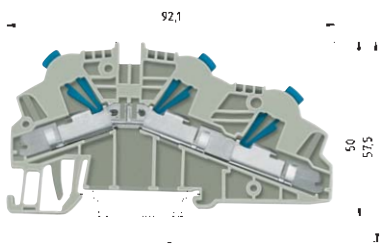


| | | WKC 1 D1/2/35 | | | | WKC 2.5 D1/2/35 | | | |
|---|---|---|---|---|---|---|---|---|---|
| | | fine stranded | solid | V | A | fine stranded | solid | V | A |
| EN 60 947-7-1 | | 0.2 – 1 mm² | 0.2 – 1 mm² | 800 V/8 kV/3 | 13.5 | 1 – 2.5 mm² | 1 – 2.5 mm² | 800 V/8 kV/3 | 24 |
| UL ratings | | No. 30-18 AWG | | 600 V | 13 | No. 18-14 AWG | | 600 V | 22 |
| CSA ratings | | No. 24-18 AWG | | 600 V | 13 | No. 16-14 AWG | | 600 V | 20 |
| Width | Rated cross section | 5 mm | | | 1 mm² | 6 mm | | | 2.5 mm² |
| Approvals | | KEMA UL * CSA ** | | | | KEMA UL * CSA ** | | | |

| | | Type | Part no. | Std. pack | Type | Part no. | Std. pack |
|---|---|---|---|---|---|---|---|
| **Duo feed-through block** | Color: gray | WKC 1 D1/2/35 | 56.301.5053.0 | 50 | WKC 2,5 D1/2/35 | 56.303.5053.0 | 50 |
| **Duo feed-through block** | Color: blue | WKC 1 D1/2/35 BLAU | 56.301.5053.6 | 50 | WKC 2,5 D1/2/35 BLAU | 56.303.5053.6 | 50 |
| | | | | | | | |
| | | | | | | | |
| **Accessories** | | | | | | | |
| 1. Mounting rail 35, 7.5 mm high | L = 2 m | 35 x 27 x 7,5 EN 60715 | 98.300.0000.0 | 1 | 35 x 27 x 7,5 EN 60715 | 98.300.0000.0 | 1 |
| Mounting rail 35, 15 mm high | L = 2 m | 35 x 24 x 15 EN 60715 | 98.360.0000.0 | 1 | 35 x 24 x 15 EN 60715 | 98.360.0000.0 | 1 |
| 2. End clamp for TS 35 | 8 mm wide | 9708/2 S 35 | Z5.522.8553.0 | 100 | 9708/2 S 35 | Z5.522.8553.0 | 100 |
| End clamp for TS 35, screwless | 8 mm wide | WEF 1/35 | Z5.523.9353.0 | 100 | WEF 1/35 | Z5.523.9353.0 | 100 |
| 3. End plate | Color: gray | APC 1-2,5 D1./TK. | 07.312.5253.0 | 10 | APC 1-2,5 D1./TK. | 07.312.5253.0 | 10 |
| | Color: blue | APC 1-2,5 D1./TK.BLAU | 07.312.5253.6 | 10 | APC 1-2,5 D1./TK.BLAU | 07.312.5253.6 | 10 |
| | Color: green | | | | | | |
| 4. Partition plate | Color: gray | TWC 1-2,5 D1. | 07.312.5353.0 | 10 | TWC 1-2,5 D1. | 07.312.5353.0 | 10 |
| | Color: blue | TWC 1-2,5 D1. BLAU | 07.312.5353.6 | 10 | TWC 1-2,5 D1. BLAU | 07.312.5353.6 | 10 |
| 5. Jumper bar, | 2pole | IVB WKF 2,5-2 | Z7.280.6227.0 | 10 | IVB WKF 4-2 | Z7.261.1227.0 | 10 |
| insulated | 3pole | IVB WKF 2,5-3 | Z7.280.6327.0 | 10 | IVB WKF 4-3 | Z7.261.1327.0 | 10 |
| | 4pole | IVB WKF 2,5-4 | Z7.280.6427.0 | 10 | IVB WKF 4-4 | Z7.261.1427.0 | 10 |
| | 5pole | IVB WKF 2,5-5 | Z7.280.6527.0 | 10 | IVB WKF 4-5 | Z7.261.1527.0 | 10 |
| | 6pole | IVB WKF 2,5-6 | Z7.280.6627.0 | 10 | IVB WKF 4-6 | Z7.261.1627.0 | 10 |
| | 7pole | IVB WKF 2,5-7 | Z7.280.6727.0 | 20 | IVB WKF 4-7 | Z7.261.1727.0 | 20 |
| | 8pole | IVB WKF 2,5-8 | Z7.280.6827.0 | 20 | IVB WKF 4-8 | Z7.261.1827.0 | 20 |
| | 9pole | IVB WKF 2,5-9 | Z7.280.6927.0 | 20 | IVB WKF 4-9 | Z7.261.1927.0 | 20 |
| | 10pole | IVB WKF 2,5-10 | Z7.280.7027.0 | 20 | IVB WKF 4-10 | Z7.261.2027.0 | 20 |
| 6. Cover w. warning symbol over 4 blocks | | ADC 1 GELB | 04.344.0153.8 | 10 | ADC 2,5 GELB | 04.344.0353.8 | 10 |
| 7. Test plug | | WK 2,5 ST 2/2,3 | Z5.553.2921.0 | 10 | WK 2,5 ST 2/2,3 | Z5.553.2921.0 | 10 |
| 8. Screw driver, uninsulated | | DIN 5264 B 0,6 x 3,5 | 06.502.4000.0 | 5 | DIN 5264 B 0,6 x 3,5 | 06.502.4000.0 | 5 |
| 10. Marking accessories | | also see page 250/251 | | | 9705 A/5/10 | 04.242.5053.0 | 25 |
| | | | | | | | |
| | | | | | | | |
| | | | | | | | |
| | | | | | | | |
| | | | | | | | |
| | | * CL I, ZN1, AExe II | | | * CL I, ZN1, AExe II | | |
| | | **CL I, ZN1, Exe II | | | **CL I, ZN1, Exe II | | |

# IDC duo ground blocks, type *WKC*

taris

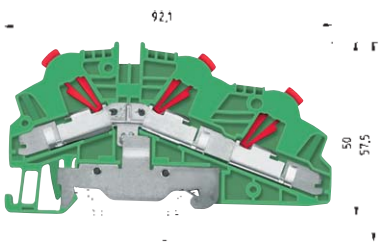


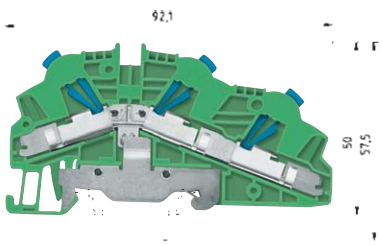


| | | WKC 1 D1/2/SL/35 | | | | WKC 2.5 D1/2/SL/35 | | | |
|---|---|---|---|---|---|---|---|---|---|
| | | fine stranded | solid | V | A | fine stranded | solid | V | A |
| EN 60 947-7-2 | | 0.2 – 1 mm² | 0.2 – 1 mm² | 800 V/8 kV/3 | 13.5 | 1 – 2.5 mm² | 1 – 2.5 mm² | 800 V/8 kV/3 | 24 |
| UL ratings | | No. 30-18 AWG | | 600 V | 13 | No. 18-14 AWG | | 600 V | 22 |
| CSA ratings | | No. 24-18 AWG | | | | No. 16-14 AWG | | | |
| Width | Rated cross section | 5 mm | | | 1 mm² | 6 mm | | | 2.5 mm² |
| Approvals | | KEMA KEUR UL * CSA ** | | | | KEMA KEUR UL * CSA ** | | | |

| | | Type | Part no. | Std. pack | Type | Part no. | Std. pack |
|---|---|---|---|---|---|---|---|
| **Duo ground block** | Color: green/yellow | WKC 1 D1/2/SL/35 | 56.301.9353.0 | 50 | WKC 2,5 D1/2/SL/35 | 56.303.9353.0 | 50 |
| **Accessories** | | | | | | | |
| 1. Mounting rail 35, 7.5 mm high | L = 2 m | 35 x 27 x 7,5 EN 60715 | 98.300.0000.0 | 1 | 35 x 27 x 7,5 EN 60715 | 98.300.0000.0 | 1 |
| Mounting rail 35, 15 mm high | L = 2 m | 35 x 24 x 15 EN 60715 | 98.360.0000.0 | 1 | 35 x 24 x 15 EN 60715 | 98.360.0000.0 | 1 |
| 2. End clamp for TS 35 | 8 mm wide | 9708/2 S 35 | Z5.522.8553.0 | 100 | 9708/2 S 35 | Z5.522.8553.0 | 100 |
| End clamp for TS 35, screwless | 8 mm wide | WEF 1/35 | Z5.523.9353.0 | 100 | WEF 1/35 | Z5.523.9353.0 | 100 |
| 3. End plate | Color: gray | | | | | | |
| | Color: blue | | | | | | |
| | Color: green | APC 1-2,5 D1./TK.GRÜN | 07.312.5253.7 | 10 | APC 1-2,5 D1./TK.GRÜN | 07.312.5253.7 | 10 |
| 4. Partition plate | Color: gray | | | | | | |
| | Color: blue | | | | | | |
| 5. Jumper bar, | 2pole | | | | | | |
| insulated | 3pole | | | | | | |
| | 4pole | | | | | | |
| | 5pole | | | | | | |
| | 6pole | | | | | | |
| | 7pole | | | | | | |
| | 8pole | | | | | | |
| | 9pole | | | | | | |
| | 10pole | | | | | | |
| 6. Cover w. warning symbol over 4 blocks | | ADC 1 GELB | 04.344.0153.8 | 10 | ADC 2,5 GELB | 04.344.0353.8 | 10 |
| 7. Test plug | | WK 2,5 ST 2/2,3 | Z5.553.2921.0 | 10 | WK 2,5 ST 2/2,3 | Z5.553.2921.0 | 10 |
| 8. Screw driver, uninsulated | | DIN 5264 B 0,6 x 3,5 | 06.502.4000.0 | 5 | DIN 5264 B 0,6 x 3,5 | 06.502.4000.0 | 5 |
| 10. Marking accessories | | also see page 250/251 | | | 9705 A/5/10 | 04.242.5053.0 | 25 |
| | | * CL I, ZN1, AExe II | | | * CL I, ZN1, AExe II | | |
| | | **CL I, ZN1, Exe II | | | **CL I, ZN1, Exe II | | |

# IDC duo feed-through blocks, type *WKC*

taris

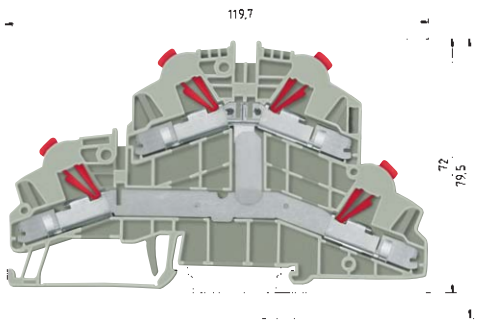


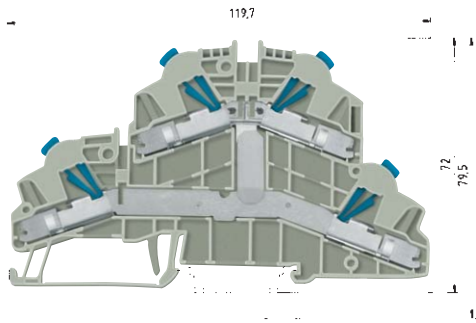


| | | WKC 1 D2/2/35 | | | | WKC 2.5 D2/2/35 | | | |
|---|---|---|---|---|---|---|---|---|---|
| | | fine stranded | solid | V | A | fine stranded | solid | V | A |
| EN 60 947-7-1 | | 0.2 – 1 mm² | 0.2 – 1 mm² | 500 V/6 kV/3 | 13.5 | 1 – 2.5 mm² | 1 – 2.5 mm² | 500 V/6 kV/3 | 24 |
| UL ratings | | No. 30-18 AWG | | 600 V | 13 | No. 18-14 AWG | | 600 V | 22 |
| CSA ratings | | No. 24-18 AWG | | 300/600 V* | 13 | No. 16-14 AWG | | 360/600 V* | 20 |
| Width | Rated cross section | 5 mm | | | 1 mm² | 6 mm | | | 2.5 mm² |
| Approvals | | KEMA UL * CSA ** | | | | KEMA UL * CSA ** | | | |

| | | Type | Part no. | Std. pack | Type | Part no. | Std. pack |
|---|---|---|---|---|---|---|---|
| **Duo feed-through block** | Color: gray | WKC 1 D2/2/35 | 56.301.5153.0 | 50 | WKC 2,5 D2/2/35 | 56.303.5153.0 | 50 |
| **Duo feed-through block** | Color: blue | WKC 1 D2/2/35 BLAU | 56.301.5153.6 | 50 | WKC 2,5 D2/2/35 BLAU | 56.303.5153.6 | 50 |
| | | | | | | | |
| | | | | | | | |
| **Accessories** | | | | | | | |
| 1. Mounting rail 35, 7.5 mm high | L = 2 m | 35 x 27 x 7,5 EN 60715 | 98.300.0000.0 | 1 | 35 x 27 x 7,5 EN 60715 | 98.300.0000.0 | 1 |
| Mounting rail 35, 15 mm high | L = 2 m | 35 x 24 x 15 EN 60715 | 98.360.0000.0 | 1 | 35 x 24 x 15 EN 60715 | 98.360.0000.0 | 1 |
| 2. End clamp for TS 35 | 8 mm wide | 9708/2 S 35 | Z5.522.8553.0 | 100 | 9708/2 S 35 | Z5.522.8553.0 | 100 |
| End clamp for TS 35, screwless | 8 mm wide | WEF 1/35 | Z5.523.9353.0 | 100 | WEF 1/35 | Z5.523.9353.0 | 100 |
| 3. End plate | Color: gray | APC 1-2,5 D2./E. | 07.312.5453.0 | 10 | APC 1-2,5 D2./E. | 07.312.5453.0 | 10 |
| | Color: blue | APC 1-2,5 D2./E. BLAU | 07.312.5453.6 | 10 | APC 1-2,5 D2./E. BLAU | 07.312.5453.6 | 10 |
| | Color: green | | | | | | |
| 4. Partition plate | Color: gray | TWC 1-2,5 D2./E. | 07.312.5553.0 | 10 | TWC 1-2,5 D2./E. | 07.312.5553.0 | 10 |
| | Color: blue | TWC 1-2,5 D2./E. BLAU | 07.312.5553.6 | 10 | TWC 1-2,5 D2./E. BLAU | 07.312.5553.6 | 10 |
| 5. Cross connector, | 2pole | IVB WKF 2,5-2 | Z7.280.6227.0 | 10 | IVB WKF 4-2 | Z7.261.1227.0 | 10 |
| insulated | 3pole | IVB WKF 2,5-3 | Z7.280.6327.0 | 10 | IVB WKF 4-3 | Z7.261.1327.0 | 10 |
| | 4pole | IVB WKF 2,5-4 | Z7.280.6427.0 | 10 | IVB WKF 4-4 | Z7.261.1427.0 | 10 |
| | 5pole | IVB WKF 2,5-5 | Z7.280.6527.0 | 10 | IVB WKF 4-5 | Z7.261.1527.0 | 10 |
| | 6pole | IVB WKF 2,5-6 | Z7.280.6627.0 | 10 | IVB WKF 4-6 | Z7.261.1627.0 | 10 |
| | 7pole | IVB WKF 2,5-7 | Z7.280.6727.0 | 20 | IVB WKF 4-7 | Z7.261.1727.0 | 20 |
| | 8pole | IVB WKF 2,5-8 | Z7.280.6827.0 | 20 | IVB WKF 4-8 | Z7.261.1827.0 | 20 |
| | 9pole | IVB WKF 2,5-9 | Z7.280.6927.0 | 20 | IVB WKF 4-9 | Z7.261.1927.0 | 20 |
| | 10pole | IVB WKF 2,5-10 | Z7.280.7027.0 | 20 | IVB WKF 4-10 | Z7.261.2027.0 | 20 |
| 6. Cover w. warning symbol over 4 blocks | | ADC 1 GELB | 04.344.0153.8 | 10 | ADC 2,5 GELB | 04.344.0353.8 | 10 |
| 7. Test plug | | WK 2,5 ST 2/2,3 | Z5.553.2921.0 | 10 | WK 2,5 ST 2/2,3 | Z5.553.2921.0 | 10 |
| 8. Screw driver, uninsulated | | DIN 5264 B 0,6 x 3,5 | 06.502.4000.0 | 5 | DIN 5264 B 0,6 x 3,5 | 06.502.4000.0 | 5 |
| | | | | | | | |
| | | | | | | | |
| | | *300 V for use group C | | | *300 V for use group C | | |
| | | 600 V for use group D, E | | | *600 V for use group D, E | | |
| | | | | | | | |
| | | | | | | | |
| | | * CL I, ZN1, AExe II | | | * CL I, ZN1, AExe II | | |
| Marking accessories also see page 178-179 and 250-251 | | **CL I, ZN1, Exe II | | | **CL I, ZN1, Exe II | | |

# IDC duo ground blocks, type *WKC*



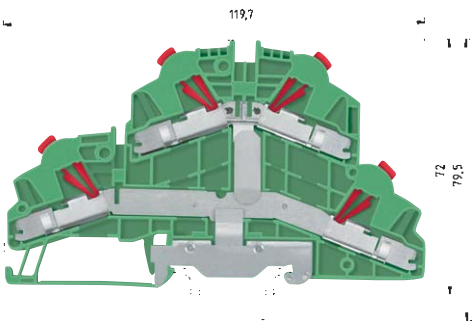


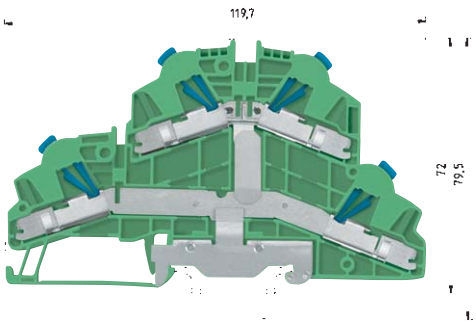


| | | WKC 1 D2/2/SL/35 | | | | WKC 2,5 D2/2/SL/35 | | | |
|---|---|---|---|---|---|---|---|---|---|
| | | fine stranded | solid | V | A | fine stranded | solid | V | A |
| EN 60 947-7-2 | | 0.2 – 1 mm² | 0.2 – 1 mm² | 500 V/6 kV/3 | 13.5 | 1 – 2.5 mm² | 1 – 2.5 mm² | 500 V/6 kV/3 | 24 |
| UL ratings | | No. 30-18 AWG | | 600 V | | No. 18-14 AWG | | 600 V | |
| CSA ratings | | No. 24-18 AWG | | | | No. 16-14 AWG | | | |
| Width | Rated cross section | 5 mm | | | 1 mm² | 6 mm | | | 2.5 mm² |
| Approvals | | KEMA KEUR, UL, * CSA, ** | | | | KEMA KEUR, UL, * CSA, ** | | | |

| | | Type | Part no. | Std. pack | Type | Part no. | Std. pack |
|---|---|---|---|---|---|---|---|
| **Duo ground block** | Color: green/yellow | WKC 1 D2/2/SL/35 | 56.301.9153.0 | 50 | WKC 2,5 D2/2/SL/35 | 56.303.9153.0 | 50 |
| **Accessories** | | | | | | | |
| 1. Mounting rail 35, 7.5 mm high | L = 2 m | 35 x 27 x 7,5 EN 60715 | 98.300.0000.0 | 1 | 35 x 27 x 7,5 EN 60715 | 98.300.0000.0 | 1 |
| Mounting rail 35, 15 mm high | L = 2 m | 35 x 24 x 15 EN 60715 | 98.360.0000.0 | 1 | 35 x 24 x 15 EN 60715 | 98.360.0000.0 | 1 |
| 2. End clamp for TS 35 | 8 mm wide | 9708/2 S 35 | Z5.522.8553.0 | 100 | 9708/2 S 35 | Z5.522.8553.0 | 100 |
| End clamp for TS 35, screwless | 8 mm wide | WEF 1/35 | Z5.523.9353.0 | 100 | WEF 1/35 | Z5.523.9353.0 | 100 |
| 3. End plate | Color: gray | | | | | | |
| | Color: blue | | | | | | |
| | Color: green | APC 1-2,5 D2./E. GRÜN | 07.312.5453.7 | 10 | APC 1-2,5 D2./E. GRÜN | 07.312.5453.7 | 10 |
| 4. Partition plate | Color: gray | | | | | | |
| | Color: blue | | | | | | |
| 5. Jumper bar, | 2pole | | | | | | |
| insulated | 3pole | | | | | | |
| | 4pole | | | | | | |
| | 5pole | | | | | | |
| | 6pole | | | | | | |
| | 7pole | | | | | | |
| | 8pole | | | | | | |
| | 9pole | | | | | | |
| | 10pole | | | | | | |
| 6. Cover w. warning symbol over 4 blocks | | ADC 1 GELB | 04.344.0153.8 | 10 | ADC 2,5 GELB | 04.344.0353.8 | 10 |
| 7. Test plug | | WK 2,5 ST 2/2,3 | Z5.553.2921.0 | 10 | WK 2,5 ST 2/2,3 | Z5.553.2921.0 | 10 |
| 8. Screw driver, uninsulated | | DIN 5264 B 0,6 x 3,5 | 06.502.4000.0 | 5 | DIN 5264 B 0,6 x 3,5 | 06.502.4000.0 | 5 |
| | | * CL I, ZN1, AExe II | | | * CL I, ZN1, AExe II | | |
| | | **CL I, ZN1, Exe II | | | **CL I, ZN1, Exe II | | |

# IDC double-tier blocks, type *WKC*

**taris**

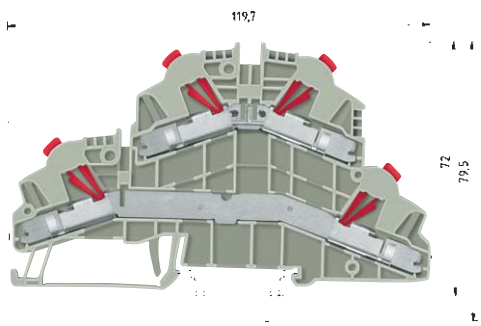


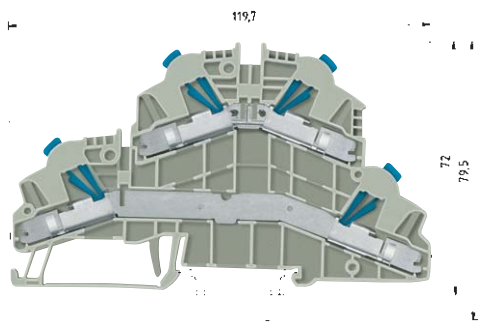


| | | WKC 1 E/35 | | | | WKC 2.5 E/35 | | | |
|---|---|---|---|---|---|---|---|---|---|
| | | fine stranded | solid | V | A | fine stranded | solid | V | A |
| EN 60 947-7-1 | | 0.2 – 1 mm² | 0.2 – 1 mm² | 500 V/6 kV/3 | 13.5 | 1 – 2.5 mm² | 1 – 2.5 mm² | 500 V/6 kV/3 | 24 |
| UL ratings | | No. 30-18 AWG | | 600 V | 13 | No. 18-14 AWG | | 600 V | 22 |
| CSA ratings | | No. 24-18 AWG | | 300/600 V** | 13 | No. 16-14 AWG | | 300/600 V** | 20 |
| Width | Rated cross section | 5 mm | | | 1 mm² | 6 mm | | | 2.5 mm² |
| Approvals | | KEMA KEUR, UL, CSA * | | | | KEMA KEUR, UL, CSA * | | | |

| | | Type | Part no. | Std. pack | Type | Part no. | Std. pack |
|---|---|---|---|---|---|---|---|
| **Double-tier block** | Color: gray | WKC 1 E/35 | 56.301.7053.0 | 50 | WKC 2,5 E/35 | 56.303.7053.0 | 50 |
| **Double-tier block** | Color: blue | WKC 1 E/35 | 56.301.7053.6 | | WKC 2,5 E/35 | 56.303.7053.6 | |
| | | | | | | | |
| | | | | | | | |
| **Accessories** | | | | | | | |
| 1. Mounting rail 35, 7.5 mm high | L = 2 m | 35 x 27 x 7,5 EN 60715 | 98.300.0000.0 | 1 | 35 x 27 x 7,5 EN 60715 | 98.300.0000.0 | 1 |
| Mounting rail 35, 15 mm high | L = 2 m | 35 x 24 x 15 EN 60715 | 98.360.0000.0 | 1 | 35 x 24 x 15 EN 60715 | 98.360.0000.0 | 1 |
| 2. End clamp for TS 35 | 8 mm wide | 9708/2 S 35 | Z5.522.8553.0 | 100 | 9708/2 S 35 | Z5.522.8553.0 | 100 |
| End clamp for TS 35, screwless | 8 mm wide | WEF 1/35 | Z5.523.9353.0 | 100 | WEF 1/35 | Z5.523.9353.0 | 100 |
| 3. End plate | Color: gray | APC 1-2,5 D2./E. | 07.312.5453.0 | 10 | APC 1-2,5 D2./E. | 07.312.5453.0 | 10 |
| | Color: blue | APC 1-2,5 D2./E. BLAU | 07.312.5453.6 | 10 | APC 1-2,5 D2./E. BLAU | 07.312.5453.6 | 10 |
| | Color: green | | | | | | |
| 4. Partition plate | Color: gray | TWC 1-2,5 D2./E. | 07.312.5553.0 | 10 | TWC 1-2,5 D2./E. | 07.312.5553.0 | 10 |
| | Color: blue | TWC 1-2,5 D2./E. BLAU | 07.312.5553.6 | 10 | TWC 1-2,5 D2./E. BLAU | 07.312.5553.6 | 10 |
| 5. Jumper bar, | 2pole | IVB WKF 2,5-2 | Z7.280.6227.0 | 10 | IVB WKF 4-2 | Z7.261.1227.0 | 10 |
| insulated | 3pole | IVB WKF 2,5-3 | Z7.280.6327.0 | 10 | IVB WKF 4-3 | Z7.261.1327.0 | 10 |
| | 4pole | IVB WKF 2,5-4 | Z7.280.6427.0 | 10 | IVB WKF 4-4 | Z7.261.1427.0 | 10 |
| | 5pole | IVB WKF 2,5-5 | Z7.280.6527.0 | 10 | IVB WKF 4-5 | Z7.261.1527.0 | 10 |
| | 6pole | IVB WKF 2,5-6 | Z7.280.6627.0 | 10 | IVB WKF 4-6 | Z7.261.1627.0 | 10 |
| | 7pole | IVB WKF 2,5-7 | Z7.280.6727.0 | 20 | IVB WKF 4-7 | Z7.261.1727.0 | 20 |
| | 8pole | IVB WKF 2,5-8 | Z7.280.6827.0 | 20 | IVB WKF 4-8 | Z7.261.1827.0 | 20 |
| | 9pole | IVB WKF 2,5-9 | Z7.280.6927.0 | 20 | IVB WKF 4-9 | Z7.261.1927.0 | 20 |
| | 10pole | IVB WKF 2,5-10 | Z7.280.7027.0 | 20 | IVB WKF 4-10 | Z7.261.2027.0 | 20 |
| 6. Cover w. warning symbol over 4 blocks | | ADC 1 GELB | 04.344.0153.8 | 10 | ADC 2,5 GELB | 04.344.0353.8 | 10 |
| 7. Test plug | | WK 2,5 ST 2/2,3 | Z5.553.2921.0 | 10 | WK 2,5 ST 2/2,3 | Z5.553.2921.0 | 10 |
| 8. Screw driver, uninsulated | | DIN 5264 B 0,6 x 3,5 | 06.502.4000.0 | 5 | DIN 5264 B 0,6 x 3,5 | 06.502.4000.0 | 5 |
| | | | | | | | |
| | | | | | | | |
| | | **300 V for use group C | | | **300 V for use group C | | |
| | | 600 V for use group D, E | | | 600 V for use group D, E | | |
| | | | | | | | |
| | | | | | | | |
| | | * CL I, ZN1, AExe II | | | * CL I, ZN1, AExe II | | |
| Marking accessories also see page 178-179 and 250-251 | | **CL I, ZN1, Exe II | | | **CL I, ZN1, Exe II | | |

# IDC function blocks, type *WKC*

taris

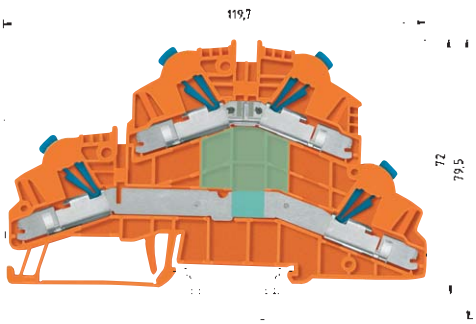


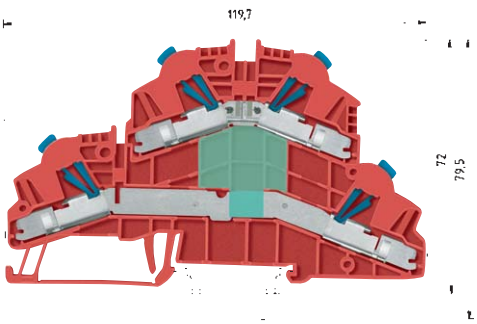


## WKC 2,5 E/35...

| | | fine stranded | solid | V | A |
|---|---|---|---|---|---|
| EN 60 947-7-1 | | 1 – 2.5 mm² | 1 – 2.5 mm² | | |
| UL ratings | | No. 18-14 AWG | | | |
| CSA ratings | | No. 16-14 AWG | | | |
| Width | Rated cross section | 6 mm | | | 2.5 mm² |
| Approvals | | | | | |

The double-tier block is available upon request as function block for most different connection tasks.

| | | Type | Part no. | Std. pack |
|---|---|---|---|---|
| | | | | |
| **Double-tier block** | Color: red | WKC 2,5 E/35... | 56.303.xx53.5 | |
| | Color: orange | WKC 2,5 E/35... | 56.303.xx53.9 | |
| | | | | |
| **Accessories** | | | | |
| 1. Mounting rail 35, 7.5 mm high | L = 2 m | 35 x 27 x 7,5 EN 60715 | 98.300.0000.0 | 1 |
| Mounting rail 35, 15 mm high | L = 2 m | 35 x 24 x 15 EN 60715 | 98.360.0000.0 | 1 |
| 2. End clamp for TS 35 | 8 mm wide | 9708/2 S 35 | Z5.522.8553.0 | 100 |
| End clamp for TS 35, screwless | 8 mm wide | WEF 1/35 | Z5.523.9353.0 | 100 |
| 3. End plate | Color: gray | APC 1-2,5 D2./E. | 07.312.5453.0 | 10 |
| | Color: blue | | | |
| | Color: green | | | |
| 4. Partition plate | Color: gray | TWC 1-2,5 D2./E. | 07.312.5553.0 | 10 |
| | Color: blue | TWC 1-2,5 D2./E. BLAU | 07.312.5553.6 | 10 |
| 5. Jumper bar, | 2pole | IVB WKF 4-2 | Z7.261.1227.0 | 10 |
| insulated | 3pole | IVB WKF 4-3 | Z7.261.1327.0 | 10 |
| | 4pole | IVB WKF 4-4 | Z7.261.1427.0 | 10 |
| | 5pole | IVB WKF 4-5 | Z7.261.1527.0 | 10 |
| | 6pole | IVB WKF 4-6 | Z7.261.1627.0 | 10 |
| | 7pole | IVB WKF 4-7 | Z7.261.1727.0 | 20 |
| | 8pole | IVB WKF 4-8 | Z7.261.1827.0 | 20 |
| | 9pole | IVB WKF 4-9 | Z7.261.1927.0 | 20 |
| | 10pole | IVB WKF 4-10 | Z7.261.2027.0 | 20 |
| 6. Cover w. warning symbol over 4 blocks | | ADC 2,5 GELB | 04.344.0353.8 | 10 |
| 7. Test plug | | WK 2,5 ST 2/2,3 | Z5.553.2921.0 | 10 |
| 8. Screw driver, uninsulated | | DIN 5264 B 0,6 x 3,5 | 06.502.4000.0 | 5 |

## Examples of functions

56.303.7553.9
56.303.7553.5

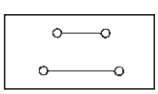

56.303.7153.5
56.303.7153.9

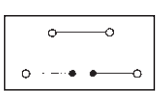

56.303.8053.9

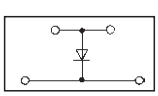

I = 1 A
U = 1000 V

56.303.8253.5

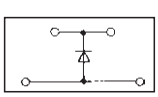

I = 1 A
U = 1000 V

56.303.7953.5

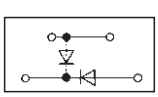

I = 1 A
U = 1000 V

56.303.8353.5

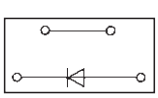

I = 1 A
U = 1000 V

56.303.7453.9
LED rot

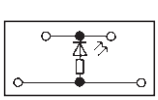

R = 4,7 KΩ
P = 0,5 W
U = 24 V DC

56.303.7253.5
LED rot

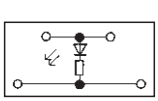

R = 4,7 KΩ
P = 0,5 W
U = 24 V DC

56.303.7353.5

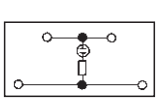

R = 680 KΩ
P = 0,25 W
U = 100-500 V

# IDC knife edge disconnect block, type *WKC*

taris

The disconnect knife of the WKC TKM series swings in an out on a pivot. The distinctive color of the disconnect lever signals the open state. The conductor can be terminated with the lever in the open or closed position. Built-in test points are located on both sides of the terminal block.

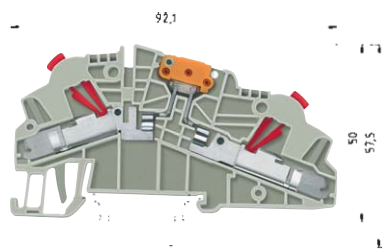


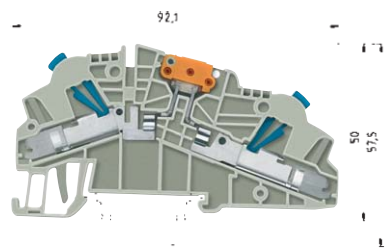


| | | WKC 1 TKM/35 | | | | WKC 2,5 TKM/35 | | | |
|---|---|---|---|---|---|---|---|---|---|
| | | fine stranded | solid | V | A | fine stranded | solid | V | A |
| EN 60 947-7-1 | | 0.2 – 1 mm² | 0.2 – 1 mm² | 800 V/8 kV/3 | 13.5 | 1 – 2.5 mm² | 1 – 2.5 mm² | 800 V/8 kV/3 | 20 |
| UL ratings | | No. 30-18 AWG | | 600 V | 13 | No. 18-14 AWG | | 600 V | 22 |
| CSA ratings | | No. 24-18 AWG | | 300/600 V* | 13 | No. 16-14 AWG | | 300/600 V* | 20 |
| Width | Rated cross section | 6 mm | | | 1 mm² | 6 mm | | | 2.5 mm² |
| Approvals | | | | | | | | | |

| | | Type | Part no. | Std. pack | Type | Part no. | Std. pack |
|---|---|---|---|---|---|---|---|
| **Knife edge disconnect block** | Color: gray | WKC 1 TKM/35 | 56.301.2053.0 | 50 | WKC 2,5 TKM/35 | 56.303.2053.0 | 50 |
| **Knife edge disconnect block** | Color: blue | WKC 1 TKM/35 BLAU | 56.301.2053.6 | 50 | WKC 2,5 TKM/35 BLAU | 56.303.2053.6 | 50 |
| | | | | | | | |
| | | | | | | | |
| **Accessories** | | | | | | | |
| 1. Mounting rail 35, 7.5 mm high | L = 2 m | 35 x 27 x 7,5 EN 60715 | 98.300.0000.0 | 1 | 35 x 27 x 7,5 EN 60715 | 98.300.0000.0 | 1 |
| Mounting rail 35, 15 mm high | L = 2 m | 35 x 24 x 15 EN 60715 | 98.360.0000.0 | 1 | 35 x 24 x 15 EN 60715 | 98.360.0000.0 | 1 |
| 2. End clamp for TS 35 | 8 mm wide | 9708/2 S 35 | Z5.522.8553.0 | 100 | 9708/2 S 35 | Z5.522.8553.0 | 100 |
| End clamp for TS 35, screwless | 8 mm wide | WEF 1/35 | Z5.523.9353.0 | 100 | WEF 1/35 | Z5.523.9353.0 | 100 |
| 3. End plate | Color: gray | APC 1-2,5 D1./TK. | 07.312.5253.0 | 10 | APC 1-2,5 D1./TK. | 07.312.5253.0 | 10 |
| | Color: blue | APC 1-2,5 D1./TK.BLAU | 07.312.5253.6 | 10 | APC 1-2,5 D1./TK.BLAU | 07.312.5253.6 | 10 |
| | Color: green | | | | | | |
| 4. Partition plate | Color: gray | TWC 1-2,5 D1. | 07.312.5353.0 | 10 | TWC 1-2,5 D1. | 07.312.5353.0 | 10 |
| | Color: blue | TWC 1-2,5 D1. BLAU | 07.312.5353.6 | 10 | TWC 1-2,5 D1. BLAU | 07.312.5353.6 | 10 |
| 5. Jumper bar, | 2pole | IVB WKF 4-2 | Z7.261.1227.0 | 10 | IVB WKF 4-2 | Z7.261.1227.0 | 10 |
| insulated | 3pole | IVB WKF 4-3 | Z7.261.1327.0 | 10 | IVB WKF 4-3 | Z7.261.1327.0 | 10 |
| | 4pole | IVB WKF 4-4 | Z7.261.1427.0 | 10 | IVB WKF 4-4 | Z7.261.1427.0 | 10 |
| | 5pole | IVB WKF 4-5 | Z7.261.1527.0 | 10 | IVB WKF 4-5 | Z7.261.1527.0 | 10 |
| | 6pole | IVB WKF 4-6 | Z7.261.1627.0 | 10 | IVB WKF 4-6 | Z7.261.1627.0 | 10 |
| | 7pole | IVB WKF 4-7 | Z7.261.1727.0 | 20 | IVB WKF 4-7 | Z7.261.1727.0 | 20 |
| | 8pole | IVB WKF 4-8 | Z7.261.1827.0 | 20 | IVB WKF 4-8 | Z7.261.1827.0 | 20 |
| | 9pole | IVB WKF 4-9 | Z7.261.1927.0 | 20 | IVB WKF 4-9 | Z7.261.1927.0 | 20 |
| | 10pole | IVB WKF 4-10 | Z7.261.2027.0 | 20 | IVB WKF 4-10 | Z7.261.2027.0 | 20 |
| 6. Cover w. warning symbol over 4 blocks | | ADC 2,5 GELB | 04.344.0353.8 | 10 | ADC 2,5 GELB | 04.344.0353.8 | 10 |
| 7. Test plug | | WK 2,5 ST 2/2,3 | Z5.553.2921.0 | 10 | WK 2,5 ST 2/2,3 | Z5.553.2921.0 | 10 |
| 8. Screw driver, uninsulated | | DIN 5264 B 0,6 x 3,5 | 06.502.4000.0 | 5 | DIN 5264 B 0,6 x 3,5 | 06.502.4000.0 | 5 |
| | | | | | | | |
| | | | | | | | |
| | | *300 V for use group C | | | *300 V for use group C | | |
| | | *600 V for use group D, E | | | *600 V for use group D, E | | |
| | | | | | | | |
| | | | | | | | |
| | | | | | | | |
| Marking accessories also see page 178-179 and 250-251 | | | | | | | |

# taris

# IDC disconnect block, type *WKC*

taris

**Fused plug:**

Nominal voltage: 250 V

Nominal current: VDE 0820 T2/IEC 127-2 with a leakage loss of 1.6W.
– 6.3 A for single blocks
– 4 A for blocks directly side by side

Indicator (24 V): red light
Power consumption 10.3 mA

Indicator (220 V): red light
Power consumption: 0.3 mA

*) The power load is determined by the built-in fuse.
The voltage range is determined by the built-in LED.

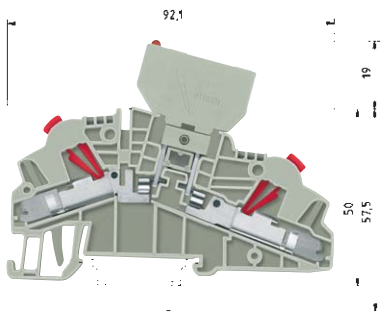


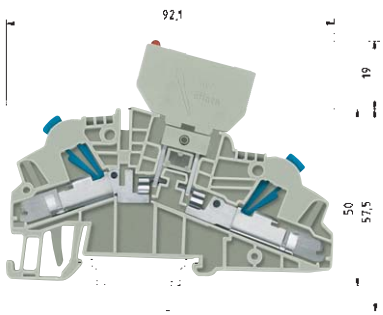


| | | WKC 1 TKG/35 with fuse holder | | | | WKC 2.5 TKG/35 with fuse holder | | | |
|---|---|---|---|---|---|---|---|---|---|
| | | fine stranded | solid | V | A | fine stranded | solid | V | A |
| EN 60 947-7-1 | | 0.2 – 1 mm² | 0.2 – 1 mm² | 800 V/8 kV/3 | * | 1 – 2.5 mm² | 1 – 2.5 mm² | 800 V/8 kV/3 | * |
| UL ratings | | No. 30-18 AWG | | 600 V*** | 6.3*** | No. 18-14 AWG | | 600 V*** | 6.3*** |
| CSA ratings | | No. 24-18 AWG | | 300 V | 6.3 | No. 16-14 AWG | | 300 V | 6.3 |
| Width | Rated cross section | 6 mm | | | 1 mm² | 6 mm | | | 2.5 mm² |
| Approvals | | | | | | | | | |

| | | Type | Part no. | Std. pack | Type | Part no. | Std. pack |
|---|---|---|---|---|---|---|---|
| **Disconnect block** | Color: gray | WKC 1 TKG/35 | 56.301.4053.0 | 50 | WKC 2,5 TKG/35 | 56.303.4053.0 | 50 |
| **Fuse holder** for fuse 5 x 20 | Color: gray | Si ST | Z1.299.4055.0 | 10 | Si ST | Z1.299.4055.0 | 10 |
| **Fuse holder** with indicator (24 V) | Color: gray | Si ST LED | Z1.299.4155.0 | 10 | Si ST LED | Z1.299.4155.0 | 10 |
| **Fuse holder** with indicator (220 V) | Color: gray | Si ST GL | Z1.299.4255.0 | 10 | Si ST GL | Z1.299.4255.0 | 10 |
| | | | | | | | |
| | | | | | | | |
| **Accessories** | | | | | | | |
| 1. Mounting rail 35, 7.5 mm high | L = 2 m | 35 x 27 x 7,5 EN 60715 | 98.300.0000.0 | 1 | 35 x 27 x 7,5 EN 60715 | 98.300.0000.0 | 1 |
| Mounting rail 35, 15 mm high | L = 2 m | 35 x 24 x 15 EN 60715 | 98.360.0000.0 | 1 | 35 x 24 x 15 EN 60715 | 98.360.0000.0 | 1 |
| 2. End clamp for TS 35 | 8 mm wide | 9708/2 S 35 | Z5.522.8553.0 | 100 | 9708/2 S 35 | Z5.522.8553.0 | 100 |
| End clamp for TS 35, screwless | 8 mm wide | WEF 1/35 | Z5.523.9353.0 | 100 | WEF 1/35 | Z5.523.9353.0 | 100 |
| 3. End plate | Color: gray | APC 1-2,5 D1./TK. | 07.312.5253.0 | 10 | APC 1-2,5 D1./TK. | 07.312.5253.0 | 10 |
| | Color: blue | | | | | | |
| | Color: green | | | | | | |
| 4. Partition plate | Color: gray | TWC 1-2,5 D1. | 07.312.5353.0 | 10 | TWC 1-2,5 D1. | 07.312.5353.0 | 10 |
| | Color: blue | | | | | | |
| 5. Jumper bar, | 2pole | IVB WKF 4-2 | Z7.261.1227.0 | 10 | IVB WKF 4-2 | Z7.261.1227.0 | 10 |
| insulated | 3pole | IVB WKF 4-3 | Z7.261.1327.0 | 10 | IVB WKF 4-3 | Z7.261.1327.0 | 10 |
| | 4pole | IVB WKF 4-4 | Z7.261.1427.0 | 10 | IVB WKF 4-4 | Z7.261.1427.0 | 10 |
| | 5pole | IVB WKF 4-5 | Z7.261.1527.0 | 10 | IVB WKF 4-5 | Z7.261.1527.0 | 10 |
| | 6pole | IVB WKF 4-6 | Z7.261.1627.0 | 10 | IVB WKF 4-6 | Z7.261.1627.0 | 10 |
| | 7pole | IVB WKF 4-7 | Z7.261.1727.0 | 20 | IVB WKF 4-7 | Z7.261.1727.0 | 20 |
| | 8pole | IVB WKF 4-8 | Z7.261.1827.0 | 20 | IVB WKF 4-8 | Z7.261.1827.0 | 20 |
| | 9pole | IVB WKF 4-9 | Z7.261.1927.0 | 20 | IVB WKF 4-9 | Z7.261.1927.0 | 20 |
| | 10pole | IVB WKF 4-10 | Z7.261.2027.0 | 20 | IVB WKF 4-10 | Z7.261.2027.0 | 20 |
| 6. Cover w. warning symbol over 4 blocks | | ADC 2,5 GELB | 04.344.0353.8 | 10 | ADC 2,5 GELB | 04.344.0353.8 | 10 |
| 7. Test plug | | WK 2,5 ST 2/2,3 | Z5.553.2921.0 | 10 | WK 2,5 ST 2/2,3 | Z5.553.2921.0 | 10 |
| 8. Screw driver, uninsulated | | DIN 5264 B 0,6 x 3,5 | 06.502.4000.0 | 5 | DIN 5264 B 0,6 x 3,5 | 06.502.4000.0 | 5 |
| | | | | | | | |
| | | | | | | | |
| | | | | | | | |
| | | | | | | | |
| | | | | | | | |
| Marking accessories also see page 178-179 and 250-251 | | | | | | | |

# IDC disconnect block, type *WKC*

taris

***) 300 V for use Group C
600 V for use Group B, D per UL 1059
Group D, E per CSA C 22.2

**) The power load is determined by the installed component

Periodic peak voltage 1000 V

| Direction of the diode: | Anode | Cathode[1)] |
|---|---|---|
| | Cathode | Anode [2)] |

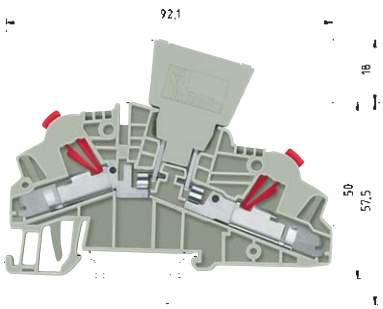


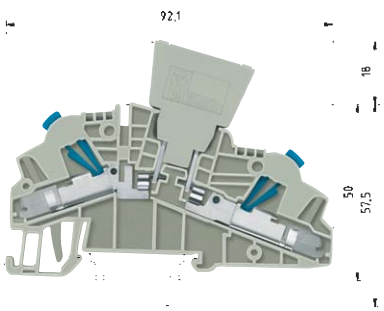


| | WKC 1 TKG/35 with diode plug | | | | WKC 2,5 TKG/35 with diode plug | | | |
|---|---|---|---|---|---|---|---|---|
| | fine stranded | solid | V | A | fine stranded | solid | V | A |
| EN 60 947-7-1 | 0.2 – 1 mm² | 0.2 – 1 mm² | 800 V/8 kV/3 | ** | 1 – 2.5 mm² | 1 – 2.5 mm² | 800 V/8 kV/3 | ** |
| UL ratings | No. 30-18 AWG | | 300/600 V*** | ** | No. 18-14 AWG | | 300/600 V*** | ** |
| CSA ratings | No. 24-18 AWG | | 300/600 V | ** | No. 16-14 AWG | | 300/600 V | ** |
| Width | 6 mm | | | | 6 mm | | | |
| Rated cross section | | | | 1 mm² | | | | 2.5 mm² |
| Approvals | | | | | | | | |

| | | | Type | Part no. | Std. pack | Type | Part no. | Std. pack |
|---|---|---|---|---|---|---|---|---|
| **Disconnect block** | | Color: gray | WKC 1 TKG/35 | 56.301.4053.0 | 50 | WKC 2,5 TKG/35 | 56.303.4053.0 | 50 |
| **Diode plug** – empty | $J_{max}$ = 10 A | Color: gray | DIST ... | Z1.299.3053.0 | | DIST ... | Z1.299.3053.0 | |
| **Diode plug** – diode | $J_{max}$ = 1 A | Color: gray | DIST-1 N 4007-1[1)] | Z1.299.3155.0 | 10 | DIST-1 N 4007-1[1)] | Z1.299.3155.0 | 10 |
| **Diode plug** – diode | $J_{max}$ = 1 A | Color: gray | DIST-1 N 4007-2[2)] | Z1.299.3355.0 | 10 | DIST-1 N 4007-2[2)] | Z1.299.3355.0 | 10 |
| **Diode plug** with jumper | $J_{max}$ = 10 A | Color: gray | DIST-D | Z1.299.3255.0 | 10 | DIST-D | Z1.299.3255.0 | |
| | | | | | | | | |
| **Accessories** | | | | | | | | |
| 1. Mounting rail 35, 7.5 mm high | | L = 2 m | 35 x 27 x 7,5 EN 60715 | 98.300.0000.0 | 1 | 35 x 27 x 7,5 EN 60715 | 98.300.0000.0 | 1 |
| Mounting rail 35, 15 mm high | | L = 2 m | 35 x 24 x 15 EN 60715 | 98.360.0000.0 | 1 | 35 x 24 x 15 EN 60715 | 98.360.0000.0 | 1 |
| 2. End clamp for TS 35 | | 8 mm wide | 9708/2 S 35 | Z5.522.8553.0 | 100 | 9708/2 S 35 | Z5.522.8553.0 | 100 |
| End clamp for TS 35, screwless | | 8 mm wide | WEF 1/35 | Z5.523.9353.0 | 100 | WEF 1/35 | Z5.523.9353.0 | 100 |
| 3. End plate | | Color: gray | APC 1-2,5 D1./TK. | 07.312.5253.0 | 10 | APC 1-2,5 D1./TK. | 07.312.5253.0 | 10 |
| | | Color: blue | | | | | | |
| | | Color: green | | | | | | |
| 4. Partition plate | | Color: gray | TWC 1-2,5 D1. | 07.312.5353.0 | 10 | TWC 1-2,5 D1. | 07.312.5353.0 | 10 |
| | | Color: blue | | | | | | |
| 5. Jumper bar, | | 2pole | IVB WKF 4-2 | Z7.261.1227.0 | 10 | IVB WKF 4-2 | Z7.261.1227.0 | 10 |
| insulated | | 3pole | IVB WKF 4-3 | Z7.261.1327.0 | 10 | IVB WKF 4-3 | Z7.261.1327.0 | 10 |
| | | 4pole | IVB WKF 4-4 | Z7.261.1427.0 | 10 | IVB WKF 4-4 | Z7.261.1427.0 | 10 |
| | | 5pole | IVB WKF 4-5 | Z7.261.1527.0 | 10 | IVB WKF 4-5 | Z7.261.1527.0 | 10 |
| | | 6pole | IVB WKF 4-6 | Z7.261.1627.0 | 10 | IVB WKF 4-6 | Z7.261.1627.0 | 10 |
| | | 7pole | IVB WKF 4-7 | Z7.261.1727.0 | 20 | IVB WKF 4-7 | Z7.261.1727.0 | 20 |
| | | 8pole | IVB WKF 4-8 | Z7.261.1827.0 | 20 | IVB WKF 4-8 | Z7.261.1827.0 | 20 |
| | | 9pole | IVB WKF 4-9 | Z7.261.1927.0 | 20 | IVB WKF 4-9 | Z7.261.1927.0 | 20 |
| | | 10pole | IVB WKF 4-10 | Z7.261.2027.0 | 20 | IVB WKF 4-10 | Z7.261.2027.0 | 20 |
| 6. Cover w. warning symbol over 4 blocks | | | ADC 2,5 GELB | 04.344.0353.8 | 10 | ADC 2,5 GELB | 04.344.0353.8 | 10 |
| 7. Test plug | | | WK 2,5 ST 2/2,3 | Z5.553.2921.0 | 10 | WK 2,5 ST 2/2,3 | Z5.553.2921.0 | 10 |
| 8. Screw driver, uninsulated | | | DIN 5264 B 0,6 x 3,5 | 06.502.4000.0 | 5 | DIN 5264 B 0,6 x 3,5 | 06.502.4000.0 | 5 |

# Hybrid DIN rail mount terminal blocks with IDC and screw technology, type *WKC...S/C*

## *taris* HYBRID

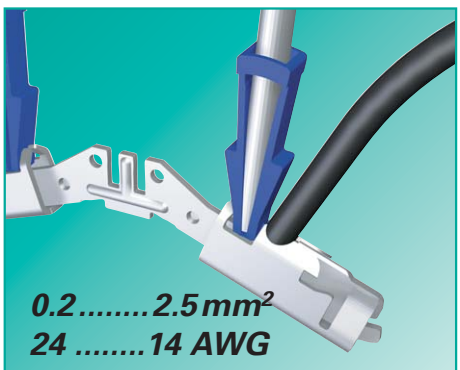


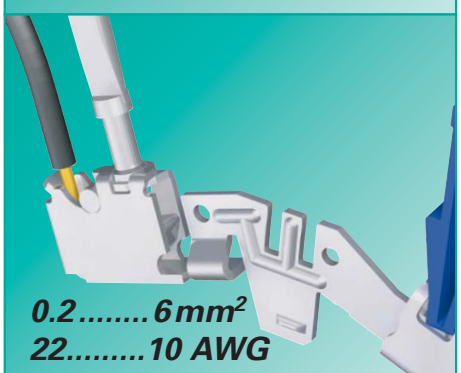


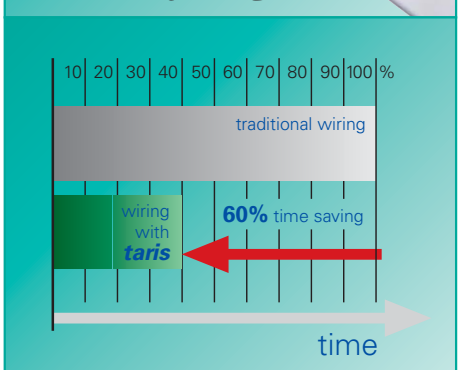


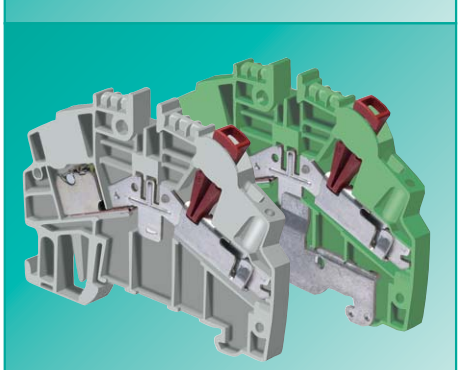

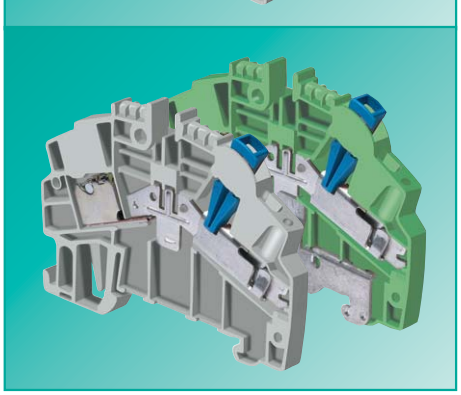

With ***taris*** HYBRID all the benefits of using IDC technology can be realized for factory wiring. While, the field side can be terminated with familiar screw technology.

***taris*** HYBRID offers...

**Application advantages.**

... for factory wiring

❒ **IDC technology**

**easy of use**

**reduced wiring times**

**compact design**

**Screwdriver guide**

→ **No special tools required**

→ **No stripping necessary**

→ **Reduces panel space**

→ **Indicates open or closed state of the contact**

... for field wiring

❒ **Screw technology**

**TOP entry system**

❒ Wide range of Conductor Types

→ **Well known termination technology**

→ **Wire and screwdriver entry in same plane**

→ **Ease of wiring in small confined spaces**
**Use of any conductor insulation type**

Terminal variations

→ feed through and ground

→ identification in the type description
**C** = IDC technology
**S** = screw connection

→ Indication of the position
**WKC 1...** Red actuator
**WKC 2.5...** Blue actuator*

**WKC 1 S/C..**

solid/stranded copper
stranded copper
solid copper
stranded copper with ferrules
torque specification

→ Connecotr and wire gauge

**C** = 0.2 – 1 mm² / AWG 24-18

**S** = 0.5 – 2.5 mm² / AWG 22-12
**S** = 0.5 – 4 mm² / AWG 22-12
**S** = 0.5 – 2.5 mm² / AWG 22-12

**S** = 8 lb. - in/0.6 Nm (M2.5)

**WKC 2.5 S/C..**

solid/stranded copper
stranded copper
solid copper
stranded copper with ferrules
torque specification

→ Connection and wire gauge

**C** = 1 – 2.5 mm² / AWG 16-14

**S** = 0.5 – 4 mm² / AWG 22-10
**S** = 0.5 – 6 mm² / AWG 22-10
**S** = 0.5 – 4 mm² / AWG 22-10

**S** = 8 lb. - in/0.7 Nm (M3)

# taris

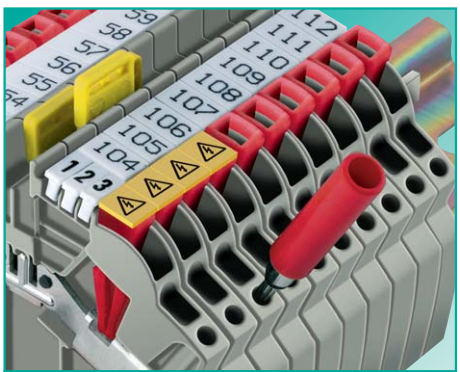

### Test plug

- ❒ ***taris*** offers testing for all terminals, without removing any of the wiring
- ❒ Built-in test points at each termination point for use with 2.3 mm diameter test plugs
- ❒ **Modular test plug modules available on pages 176, 177**

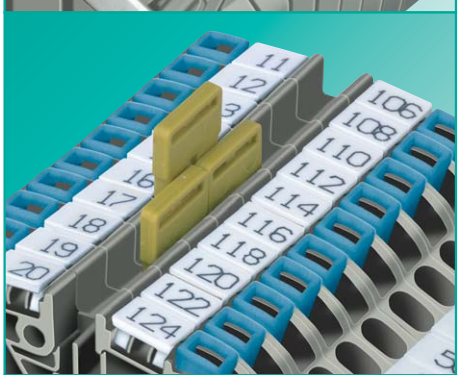

### Jumper bars

- ❒ The insulated push-in jumper bars, IVB WKF... are completely touch safe
- ❒ No partition plate is required between jumpered terminals of different potential
- ❒ The IVB WKF... jumper bars are rated for the same current as the terminal block

### Marking capability

- ❒ Single marking tags
- ❒ Marking tag strips (10 tags per strip) to rapidly identify the terminals and circuitry
- ❒ Tear-off marking strip for marking up to 3 digits per terminal block
- ❒ Marking facility is down the center so that the marking tag is not covered by the conductor.

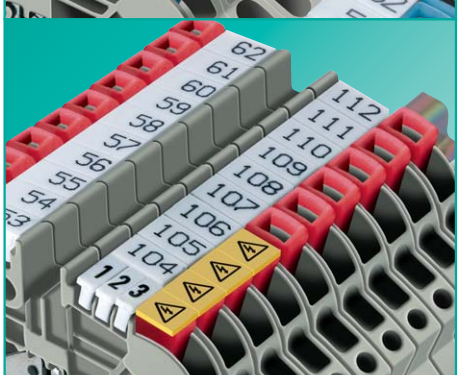

### Cover with warning symbol

- ❒ Over with warning symbol **ADC** to snap on to blocks which remain live after the mains have been switch off (VDE 0113)
- ❒ Cover can only be removed with a screwdriver

### DQS certificates for all products

- ❒ Quality standard as per DIN ISO 9001 in Development, Production, Assembly
- ❒ Continued control of the quality standard by means of regular internal and external quality audits
- ❒ Compatible with certificates of other countries:
  – BSI Certificate, Great Britain
  – SQS Certificate, Switzerland
  – Aib-Vincotte Certificate, Belgium
  – ÖQS Certificate, Austria

### Material

❒ Metal parts:

special alloys and surface treatments provide low contact resistance and high corrosion resistance:

clamping body made of tin-plated copper

current carrying bar made of tin-plated copper

grounding foot - tin-plated copper alloy

❒ Insulating material:

Polyamide has excellent electrical, chemical and mechanical properties

Insulating housings: Polyamide 66/6

Tracking current resistance: CTI 600

Flammability class: UL 94-V0

(also see section ***facts*** & DATA)

Our ***wieplan*** software helps to plan your own terminal block assembly (see page 10/11).

Various German and international approvals are available for feed-through terminal blocks. They are indiscated in detail on the corresponding pages. The feed-through blocks of series WK/WKN are approved for the increased-safety type of protection EEx "e" in accordance to DIN EN 50019 / VDE 0170/0171 part 6 where indicated. No type test is required for the EEx "i" type of protection.

### Note

The information regarding cross-sectional areas and connection types pertains to wires without ferrules. Ferrules are not neccessary for secure connection.

The voltage ratings apply to the terminals in their intended application. When different products are mounted adjacent to each other, the proper isolation distances must be adhered to. For this purpose, **Wieland** offers a large selection of appopriate accessories.

A detailed description of technical data, the standards requirements, and the application conditions can be found in catalog section ***facts*** & DATA.

# Hybrid feed-through terminals with IDC and screw technology, type *WKC...S/C*

**taris** HYBRID

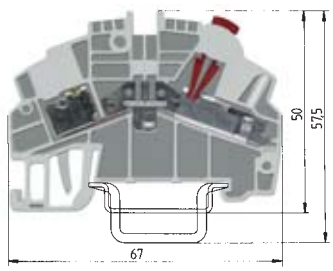


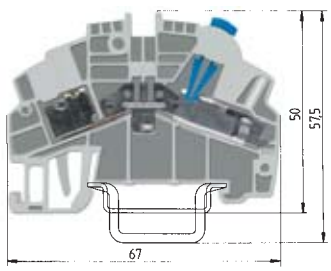


Clamping point **"S"** = screw technology
Clamping point **"C"** = IDC technology

Wire strip length applies to the screw terminal only

| | | WKC 1 S/C/35 | | | | WKC 2.5 S/C/35 | | | |
|---|---|---|---|---|---|---|---|---|---|
| | | fine stranded | solid | V | A | fine stranded | solid | V | A |
| EN 60 947-7-1 | | 0.21 – 1 mm² | 0.21 – 1 mm² | 800 V/8 kV/3 | 13.5 | 1 – 2.5 mm² | 1 – 2.5 mm² | 800 V/8 kV/3 | 24 |
| UL ratings | | "S" 22-12 AWG / "C" 24-18 AWG 600V | | | 13 | "S" 22-10 AWG/ "C" 18-14 AWG 600V | | | 22 |
| CSA ratings | | "S" 22-12 AWG/ "C" 24-18 AWG 600V | | | 13 | "S" 22-10 AWG/ "C" 16-14 AWG 600V | | | 20 |
| Width | Wire strip length | 5 mm | | | 10mm | 6 mm | | | 10mm |
| Approvals | | pending | | | | pending | | | |

| | | | Type | Part no. | Std. pack | Type | Part no. | Std. pack |
|---|---|---|---|---|---|---|---|---|
| **Feed-through terminal** | | Color: gray | WKC 1 S/C/35 | 56.351.0053.0 | | WKC 2,5 S/C/35 | 56.353.0053.0 | |
| **Feed-through terminal** | | Color: blue | WKC 1 S/C/35 BLAU | 56.351.0053.6 | | WKC 2,5 S/C/35 | 56.353.0053.6 | |
| **Ground terminal** | | Color: green/yellow | | | | | | |
| | | | | | | | | |
| | | | | | | | | |
| **Accessories** | | | | | | | | |
| 1. Mounting rail 35, 7.5 mm high | | L = 2 m | 35 x 27 x 7,5 EN 60715 | 98.300.0000.0 | 1 | 35 x 27 x 7,5 EN 60715 | 98.300.0000.0 | 1 |
| Mounting rail 35, 15 mm high | | L = 2 m | 35 x 24 x 15 EN 60715 | 98.360.0000.0 | 1 | 35 x 24 x 15 EN 60715 | 98.360.0000.0 | 1 |
| 2. End clamp for TS 35, with screw | | 8 mm wide | 9708/2 S 35 | Z5.522.8553.0 | 100 | 9708/2 S 35 | Z5.522.8553.0 | 100 |
| End clamp for TS 35, screwless | | 8 mm wide | WEF 1/35 | Z5.523.9353.0 | 100 | WEF 1/35 | Z5.523.9353.0 | 100 |
| 3. End plate | 1.5 mm wide | Color: gray | APC 1-2,5 | 07.312.5053.0 | 10 | APC 1-2,5 | 07.312.5053.0 | 10 |
| | 1.5 mm wide | Color: blue | APC 1-2,5 BLAU | 07.312.5053.6 | 10 | APC 1-2,5 BLAU | 07.312.5053.6 | 10 |
| | 1.5 mm wide | Color: green | | | | | | |
| 4. Partition plate | 1.5 mm wide | Color: gray | TWC 1-2,5 | 07.312.5153.0 | 10 | TWC 1-2,5 | 07.312.5153.0 | 10 |
| | 1.5 mm wide | Color: blue | TWC 1-2,5 BLAU | 07.312.5153.6 | 10 | TWC 1-2,5 BLAU | 07.312.5153.6 | 10 |
| 5. Jumper bar, | | 2pole | IVB WKF 2,5-2 | Z7.280.6227.0 | 10 | IVB WKF 4-2 | Z7.261.1227.0 | 10 |
| insulated | | 3pole | IVB WKF 2,5-3 | Z7.280.6327.0 | 10 | IVB WKF 4-3 | Z7.261.1327.0 | 10 |
| | | 4pole | IVB WKF 2,5-4 | Z7.280.6427.0 | 10 | IVB WKF 4-4 | Z7.261.1427.0 | 10 |
| | | 5pole | IVB WKF 2,5-5 | Z7.280.6527.0 | 10 | IVB WKF 4-5 | Z7.261.1527.0 | 10 |
| | | 6pole | IVB WKF 2,5-6 | Z7.280.6627.0 | 10 | IVB WKF 4-6 | Z7.261.1627.0 | 10 |
| | | 7pole | IVB WKF 2,5-7 | Z7.280.6727.0 | 20 | IVB WKF 4-7 | Z7.261.1727.0 | 20 |
| | | 8pole | IVB WKF 2,5-8 | Z7.280.6827.0 | 20 | IVB WKF 4-8 | Z7.261.1827.0 | 20 |
| | | 9pole | IVB WKF 2,5-9 | Z7.280.6927.0 | 20 | IVB WKF 4-9 | Z7.261.1927.0 | 20 |
| | | 10pole | IVB WKF 2,5-10 | Z7.280.7027.0 | 20 | IVB WKF 4-10 | Z7.261.2027.0 | 20 |
| 6. Cover w. warning symbol over 4 blocks | | | | | | | | |
| | | Clamping point **„C"** | ADC 1/4 GELB | 04.344.0153.8 | 10 | ADC 2,5 GELB | 04.344.0353.8 | 10 |
| | | Clamping point **„S"** | ADF 2,5/4 GELB | 04.343.6053.8 | 10 | ADF 4/4 GELB | 04.343.6153.8 | 10 |
| 7. Test plug | | | WK 2,5 ST 2/2,3 | Z5.553.2921.0 | 10 | WK 2,5 ST 2/2,3 | Z5.553.2921.0 | 10 |
| 8. Screw driver, uninsulated | | | DIN 5264 B 0,6 x 3,5 | 06.502.4000.0 | 5 | DIN 5264 B 0,6 x 3,5 | 06.502.4000.0 | 5 |
| Screw driver, uninsulated, MINI | | | DIN 5264 B 0,6 x 3,5 M | 06.502.5000.0 | 10 | DIN 5264 B 0,6 x 3,5 M | 06.502.5000.0 | 10 |
| | | | | | | | | |
| | | | | | | | | |
| Marking accessories also see page 178-179 and 250-251 | | | | | | | | |
| | | | | | | | | |

# Hybrid ground terminals with IDC and screw technology, type *WKC...S/C*



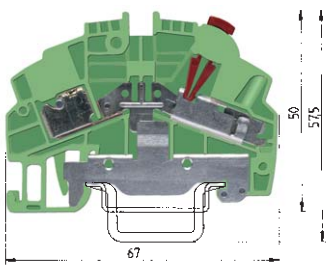


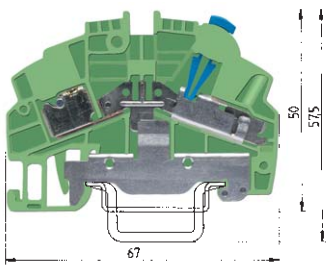


Clamping point **"S"** = screw technology
Clamping point **"C"** = IDC technology

Wire strip length applies to the screw terminal only

| | | WKC 1 S/C/SL/35 | | | | WKC 2.5 S/C/35 | | | |
|---|---|---|---|---|---|---|---|---|---|
| | | fine stranded | solid | V | A | fine stranded | solid | V | A |
| EN 60 947-7-1 | | 0.21 – 1 mm² | 0.21 – 1 mm² | 800 V/8 kV/3 | 13.5 | 1 – 2,5 mm² | 1 – 2,5 mm² | 800 V/8 kV/3 | 24 |
| UL ratings | | "S" 22-12 AWG/ "C" 24-18 AWG | | 600V | 13 | "S" 22-10 AWG/ "C" 18-14 AWG | | 600V | 22 |
| CSA ratings | | "S" 22-12 AWG/ "C" 24-18 AWG | | 600V | 13 | "S" 22-10 AWG/ "C" 16-14 AWG | | 600V | 20 |
| Width | Wire strip length | 5 mm | | | 10mm | 6 mm | | | 10mm |
| Approvals | | pending | | | | pending | | | |

| | | | Type | Part no. | Std. pack | Type | Part no. | Std. pack |
|---|---|---|---|---|---|---|---|---|
| **Feed-through terminal** | | Color: gray | | | | | | |
| **Feed-through terminal** | | Color: blue | | | | | | |
| **Ground terminal** | | Color: green/yellow | WKC 1 S/C/SL/35 | 56.351.9053.0 | | WKC 2,5 S/C/SL/35 | 56.353.9053.0 | |
| | | | | | | | | |
| | | | | | | | | |
| **Accessories** | | | | | | | | |
| 1. Mounting rail 35, 7.5 mm high | | L = 2 m | 35 x 27 x 7,5 EN 60715 | 98.300.0000.0 | 1 | 35 x 27 x 7,5 EN 60715 | 98.300.0000.0 | 1 |
| Mounting rail 35, 15 mm high | | L = 2 m | 35 x 24 x 15 EN 60715 | 98.360.0000.0 | 1 | 35 x 24 x 15 EN 60715 | 98.360.0000.0 | 1 |
| 2. End clamp for TS 35, with screw | | 8 mm wide | 9708/2 S 35 | Z5.522.8553.0 | 100 | 9708/2 S 35 | Z5.522.8553.0 | 100 |
| End clamp for TS 35, screwless | | 8 mm wide | WEF 1/35 | Z5.523.9353.0 | 100 | WEF 1/35 | Z5.523.9353.0 | 100 |
| 3. End plate | 1.5 mm wide | Color: gray | | | | | | |
| | 1.5 mm wide | Color: blue | | | | | | |
| | 1.5 mm wide | Color: green | APC 1-2,5 GRÜN | 07.312.5053.7 | 10 | APC 1-2,5 GRÜN | 07.312.5053.7 | 10 |
| 4. Partition plate | 1.5 mm wide | Color: gray | | | | | | |
| | 1.5 mm wide | Color: blue | | | | | | |
| 5. Jumper bar, | | 2pole | | | | | | |
| insulated | | 3pole | | | | | | |
| | | 4pole | | | | | | |
| | | 5pole | | | | | | |
| | | 6pole | | | | | | |
| | | 7pole | | | | | | |
| | | 8pole | | | | | | |
| | | 9pole | | | | | | |
| | | 10pole | | | | | | |
| 6. Cover w. warning symbol over 4 blocks | | | | | | | | |
| | | Clamping point **„C"** | ADC 1/4 GELB | 04.344.0153.8 | 10 | ADC 2,5 GELB | 04.344.0353.8 | 10 |
| | | Clamping point **„S"** | ADF 2,5/4 GELB | 04.343.6053.8 | 10 | ADF 4/4 GELB | 04.343.6153.8 | 10 |
| 7. Test plug | | | WK 2,5 ST 2/2,3 | Z5.553.2921.0 | 10 | WK 2,5 ST 2/2,3 | Z5.553.2921.0 | 10 |
| 8. Screw driver, uninsulated | | | DIN 5264 B 0,6 x 3,5 | 06.502.4000.0 | 5 | DIN 5264 B 0,6 x 3,5 | 06.502.4000.0 | 5 |
| Screw driver, uninsulated, MINI | | | DIN 5264 B 0,6 x 3,5 M | 06.502.5000.0 | 10 | DIN 5264 B 0,6 x 3,5 M | 06.502.5000.0 | 10 |
| | | | | | | | | |
| | | | | | | | | |
| | | | | | | | | |
| | | | | | | | | |

# Accessories
## DIN rail terminal blocks with IDC connection, type *WKC*

taris

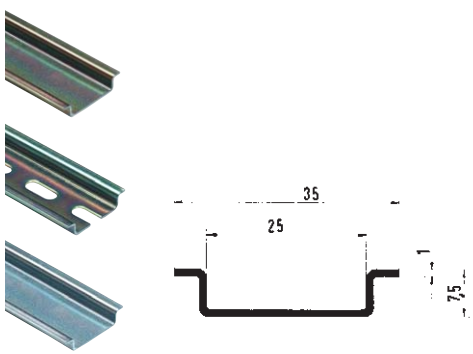


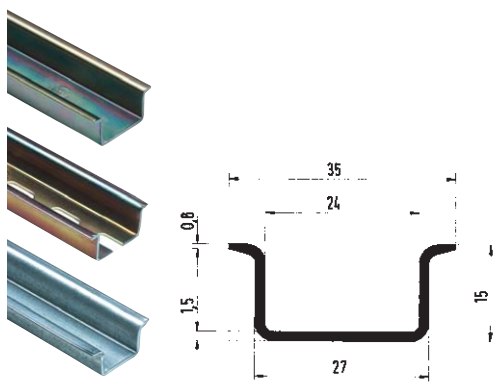


**Mounting rail 35 x 7,5**
according to DIN EN 60715

**Mounting rail 35 x 15**
according to DIN EN 60715

| | Type | Part no. | Std. pack | Type | Part no. | Std. pack |
|---|---|---|---|---|---|---|
| **Mounting rail** | | | | | | |
| | | | | | | |
| 1. Steel, galv. zinc-plated, dichromated, unslotted L = 2 m | 35 x 27 x 7,5 EN 60715 | 98.300.0000.0 | 1 | 35 x 27 x 15 EN 60715 | 98.370.0000.0 | 1 |
| Steel, galv. zinc-plated, dichromated, slotted L = 2 m | 35 x 27 x 7,5 EN 60715 slotted | 98.300.1000.0 | 1 | 35 x 27 x 15 EN 60715 | 98.370.1000.0 | 1 |
| 2. Steel, unplated unslotted L = 2 m | 35 x 27 x 7,5 EN 60715 unslotted | 98.300.0010.0 | | | | |
| Steel, unplated slotted L = 2 m | | | | | | |
| 3. Steel, high-temp. zinc-plated unslotted L = 2 m | | | | | | |
| Steel, high-temp. zinc-plated slotted L = 2 m | | | | | | |
| 4. E copper unslotted L = 2 m | | | | | | |
| E copper slotted L = 2 m | | | | | | |
| | | | | | | |
| | | | | | | |
| | | | | | | |
| | | | | | | |
| | | | | | | |
| | | | | | | |
| | | | | | | |
| | | | | | | |
| | | | | | | |
| **End clamp** | | | | | | |
| | | | | | | |
| 5. End clamp with screw for 35 mm rail 8 mm wide | | | | | | |
| 6. End clamp with screw for 35 mm rail | | | | | | |
| with marking plate 8/17.5 mm wide | | | | | | |
| 7. End clamp, screwless, for 35 mm rail 8 mm wide | | | | | | |
| 8. End clamp, screwless, for 35 mm rail | | | | | | |
| with marking plate 8/17,5 mm wide | | | | | | |
| for terminal rails | | | | | | |
| 9. Bus bar holder 8 mm wide | | | | | | |
| Busbar support, with screw 8 mm | | | | | | |
| 10. Clamping screw for mounting rail | | | | | | |
| 11. Optional label carrier | | | | | | |
| 12. Paper Markers in perforated sheet form | | | | | | |
| (1 sheet = 100 Marking tags) | | | | | | |

# taris



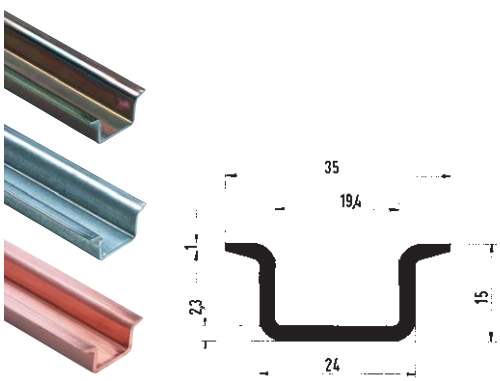

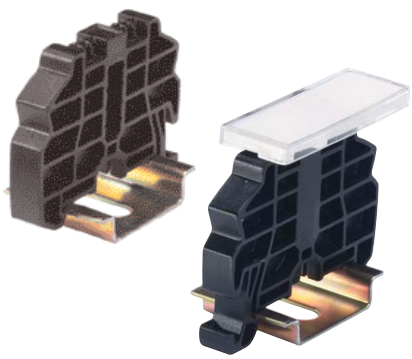

**Mounting rail 35 x 15**
according to DIN EN 60715

| Type | Part no. | Std. pack |
|---|---|---|
| 35 x 27 x 15 EN 60715 | 98.360.0000.0 | 1 |
| 35 x 27 x 15 EN 60715 ZN | 98.360.0004.0 | 1 |
| 35 x 27 x 15 EN 60715 CU | 98.380.0000.0 | 10 |

**End clamp for TS 35**
fastening with screw

| Type | Part no. | Std. pack |
|---|---|---|
| 9708/2 S 35 | Z5.522.8553.0 | 100 |
| 9708/2 BS/35 | 69.920.0553.0 | 100 |
| | 04.019.0289.0 | 10 |

**End clamp for TS 35**
fastening without screw

| Type | Part no. | Std. pack |
|---|---|---|
| WEF 1/35 | Z5.523.9353.0 | 100 |
| WEF 1 BS/35 | 69.920.1053.0 | 100 |
| WKIF SH/E/35 | Z1.108.8453.0 | 10 |
| | 69.920.1153.0 | |
| | 05.091.0200.0 | |
| BSIR | Z4.243.8453.0 | |
| | 04.019.0289.0 | 10 |

# Marking accessories for IDC DIN rail terminal blocks

taris

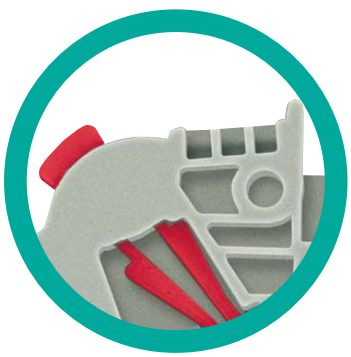

Material:
Polyamide 66/6
Color: black figures on white background

DIN rail terminal blocks with IDC connection, type WKC, accept marking tags on both sides on top of the block in a 3-chamber slot.
It can be either 3 single number tags from the tear-off marking strip , or single tags, or marking strips.

1. **Marking strips**, marked and unmarked, made from Polyamide 66/6, suitable for10 blocks in a row.
   Marking 1-10, 11-20 etc. up to 991-999.
   Type 9705 A/5/10 (5 mm spacing)
   for terminal blocks type WKC 1...
   Type 9705 A/6/10 (6 mm spacing)
   for terminal blocks type WKC 2.5...

2. **Tear-off marking strip** with 10 marking tags made of Polyamide 66/6, white, marked and unmarked.
   This marking system considerably reduces the marking time of terminal block assemblies. For numerical marking of terminal block assemblies you require only 1 1 warehouse positions. As the time used for picking and attaching the tags is reduced, and as stockkeeping is low and the prices extremely favorable, enormous cost savings are the result from using these tear-off marking strips.
   Type 9704 A...
   (see page 180)

3. **Single marking tag** made of Polyamide 66/6, white, marked and unmarked.
   Type 9705 A...

4. **Marking plates** made of Polyamide 66/6 consisting of 11 marking strips.
   Type 9705 A/5/10 (5 mm spacing)
   for terminal blocks type WKC 1...
   Type 9705 A/6/10 (6 mm spacing)
   for terminal blocks type WKC 2.5...

## Bezeichnungscomputer im Systemkoffer

| Type | Part no. | Std. pack |
|---|---|---|
| **Marking computer for markingcards** | | |
| | | |
| marcom 2 | 95.502.0000.0 | 1 |
| | | |
| | | |
| **Description** | | |
| **wieland marcom 2** is a freely programmable marking | | |
| computer for marking tags of DIN rail terminal | | |
| blocks, pluggable connectors, cables and switching | | |
| devices. The program technology with flexible | | |
| menu control produces excellent results requiring | | |
| only few input. Entry of a sequence of figures is | | |
| automatically limited by the parameters of the | | |
| selected marking tags, making wrong print-out | | |
| impossible. Repeated operations can be saved as so- | | |
| called JOBs and are therefore immediately available | | |
| for print-out without further entries. The computer | | |
| disposes of a large number of fonts, with numerical, | | |
| alphanumerical (small/capital letters) and symbolic | | |
| characters. | | |
| **marcom 2** is powered by an attached power supply. | | |
| For a mains-independent operation, the **marcom 2** | | |
| Power Pack is available. | | |
| | | |
| | | |
| | | |
| | | |
| | | |
| Marking tag plates for **marcom 2** | | |
| 9705 A/5/10/11 marcom | Z4.242.5053.0 | 10 |
| 9705 AL/5/10/6 marcom | Z4.242.5153.0 | 10 |
| 9705 A/6/10/11 marcom | Z4.242.6053.0 | 10 |
| 9705 AL/6/10/6 marcom | Z4.242.6353.0 | 10 |
| 9705 A/8/10/7 marcom | Z4.242.8053.0 | 10 |

# Marking strips and marking plates, marked

## 1 mm²/5 mm Width

| | | | |
|---|---|---|---|
| **Marking strips, unmarked** | | | |
| 9705 A/5/10 | | 04.242.5053.0 | 25 |
| | | | |
| **Marking strips, marked** | | | |
| 9705 A/5/10 B | 1 - 10 | 04.845.0153.0 | 25 |
| | 11 - 20 | 04.845.0253.0 | 25 |
| | 21 - 30 | 04.845.0353.0 | 25 |
| | 31 - 40 | 04.845.0453.0 | 25 |
| | 41 - 50 | 04.845.0553.0 | 25 |
| | 51 - 60 | 04.845.0653.0 | 25 |
| | 61 - 70 | 04.845.0753.0 | 25 |
| | 71 - 80 | 04.845.0853.0 | 25 |
| | 81 - 90 | 04.845.0953.0 | 25 |
| | 91 - 100 | 04.845.1053.0 | 25 |
| | | | |
| | ⏚ (10 x) | 04.855.0053.0 | 25 |
| | ⏚ (10 x) | 04.855.0153.0 | 25 |
| | + (10 x) | 04.855.0253.0 | 25 |
| | – (10 x) | 04.855.0353.0 | 25 |
| | L1 (10 x) | 04.855.0453.0 | 25 |
| | L2 (10 x) | 04.855.0553.0 | 25 |
| | L3 (10 x) | 04.855.0653.0 | 25 |
| | PE (10 x) | 04.855.0753.0 | 25 |
| | SL (10 x) | 04.855.3153.0 | 25 |
| | N (10 x) | 04.855.3253.0 | 25 |
| | F1 (10 x) | 04.855.0953.0 | 25 |
| | F2 (10 x) | 04.855.1053.0 | 25 |
| L1, L2, L3, N, PE | (2 x) | 04.855.0853.0 | 25 |
| | | | |
| **Marking plates, unmarked** | | | |
| 9705 A/5/10/11 | | Z4.242.5053.0 | 10 |
| | | | |
| | | | |
| custom marking upon request | | | |

## 2.5 mm²/6 mm Width

| | | | |
|---|---|---|---|
| **Marking strips, unmarked** | | | |
| 9705 A/6/10 | | 04.242.6053.0 | 25 |
| | | | |
| **Marking strips, marked** | | | |
| 9705 A/6/10 B | 1 - 10 | 04.846.0153.0 | 25 |
| | 11 - 20 | 04.846.0253.0 | 25 |
| | 21 - 30 | 04.846.0353.0 | 25 |
| | 31 - 40 | 04.846.0453.0 | 25 |
| | 41 - 50 | 04.846.0553.0 | 25 |
| | 51 - 60 | 04.846.0653.0 | 25 |
| | 61 - 70 | 04.846.0753.0 | 25 |
| | 71 - 80 | 04.846.0853.0 | 25 |
| | 81 - 90 | 04.846.0953.0 | 25 |
| | 91 - 100 | 04.846.1053.0 | 25 |
| | | | |
| | ⏚ (10 x) | 04.856.0053.0 | 25 |
| | ⏚ (10 x) | 04.856.0153.0 | 25 |
| | + (10 x) | 04.856.0253.0 | 25 |
| | – (10 x) | 04.856.0353.0 | 25 |
| | L1 (10 x) | 04.856.0453.0 | 25 |
| | L2 (10 x) | 04.856.0553.0 | 25 |
| | L3 (10 x) | 04.856.0653.0 | 25 |
| | PE (10 x) | 04.856.0753.0 | 25 |
| | SL (10 x) | 04.856.3153.0 | 25 |
| | N (10 x) | 04.856.3253.0 | 25 |
| | F1 (10 x) | 04.856.0953.0 | 25 |
| | F2 (10 x) | 04.856.1053.0 | 25 |
| L1, L2, L3, N, PE | (2 x) | 04.856.0853.0 | 25 |
| | | | |
| **Marking plates, unmarked** | | | |
| 9705 A/6/10/11 | | Z4.242.6053.0 | 10 |
| | | | |
| | | | |
| custom marking upon request | | | |

# Appliance Terminals

# appliance TERMINALS

All Wieland Components which require CE general certification are CE certified, and identified with the CE logo.


**Terminal strips**

**Lighting and appliance terminals**

**Plug/screw terminal strips**
**Terminal box**
**Distribution terminal strips**

**Mains connectors**
**for appliance wiring**

appliance

# CONTENTS


| | |
|---|---|
| **KL 16 PA** compact | Page 256 |
| **Europa terminal strips** | Page 257 |
| • 1.5 $mm^2$ to 16 $mm^2$ | Page 258 |
| • Male/female terminal strips | Page 258 |
| • Marking accessories | Page 260 |
| **1 to 4pole** | Page 261 |
| **Modular terminals** | Page 263 |
| **2 to 5pole** | Page 264 |
| **2 to 12pole** | Page 265 |
| **Plug/screw KL 17 N** | Page 267 |
| **KL 58** | Page 268 |
| • 6 – 10 $mm^2$ | Page 268 |
| • 3, 5, 6pole | Page 268 |
| • Screw/screw connections | Page 267 |
| • Screw/tab connections | Page 267 |

# Unbreakable terminal strips for narrow spaces

# KL 16 PA

**Material:**

Insulating housing: Polyamide 6 ivory
Hardness test at 125 °C
Glow-wire test with 850 °C
Tracking test PTI 250
Clamping body: nickel-plated brass
Wire protection: phosphor bronze
Clamping screws: steel, zinc-plated and dichromated

These terminal strips are designed for use under extreme conditions accord. to EN 60335-1/ DIN VDE 0700 T1.

Terminals with wire protection DS are fitted with a wire protection guard inside the clamping body, which prevents damage to the connected wire.

The clamping screws are secured against loosening and provide vibration-proof connections.

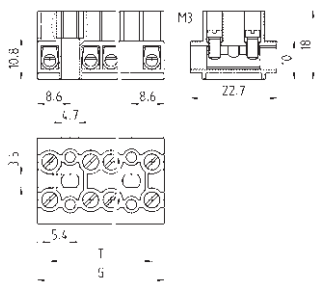


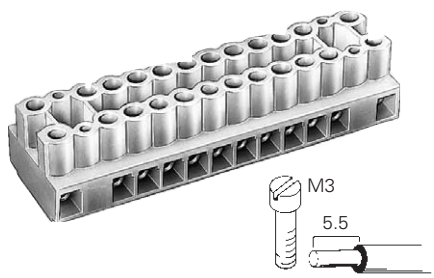


| | Type KL 16 PA 2.5 mm² without wire protection | Type KL 16 PA 2.5 mm² with wire protection (DS) |
|---|---|---|
| DIN VDE 0110 (fixed position) | 500 V/6 kV/3 | 500 V/6 kV/3 |
| UL ratings | No. 22-12 AWG 250 V 20 A | No. 22-12 AWG 250 V 20 A |
| CSA ratings | No. 22-12 AWG 300 V 25 A | No. 22-12 AWG 300 V 25 A |
| EN 60335-1/DIN VDE 0700 T1 | AC 400 V; 10 A; 1 – 1.5 mm²/1 – 2.5 mm² | AC 400 V; 10 A; 1 – 1.5 mm²/1 – 2.5 mm² |
| Approvals | | |

| | Poles | G | T | Type | Part no. | Std. pack | Type | Part no. | Std. pack |
|---|---|---|---|---|---|---|---|---|---|
| | 4 | 33.4 | 27 | KL 16/4 PA | 29.400.0453.0 | 65 | KL 16/4 PA DS | 29.401.0453.0 | 65 |
| | 6 | 44.2 | 37.8 | KL 16/6 PA | 29.400.0653.0 | 50 | KL 16/6 PA DS | 29.401.0653.0 | 50 |
| | 8 | 55 | 48.6 | KL 16/8 PA | 29.400.0853.0 | 40 | KL 16/8 PA DS | 29.401.0853.0 | 40 |
| | 12 | 76.6 | 70 | KL 16/12 PA | 29.400.1253.0 | 30 | KL 16/12 PA DS | 29.401.1253.0 | 30 |
| | 16 | 98.2 | 91.8 | KL 16/16 PA | 29.400.1653.0 | 20 | KL 16/16 PA DS | 29.401.1653.0 | 20 |
| | 20 | 119.8 | 113.4 | KL 16/20 PA | 29.400.2053.0 | 20 | KL 16/20 PA DS | 29.401.2053.0 | 20 |
| **Accessories** | | | | | | | | | |
| Marking plate from white PVC, | 4 | 33.4 | 27 | BZKL 16/4 Z | Z4.102.0480.0 | 100 | BZKL 16/4 Z | Z4.102.0480.0 | 100 |
| marking surface on both sides | 6 | 44.2 | 37.8 | BZKL 16/6 Z | Z4.102.0680.0 | 100 | BZKL 16/6 Z | Z4.102.0680.0 | 100 |
| and four plastic pins from | 8 | 55 | 48.6 | BZKL 16/8 Z | Z4.102.0880.0 | 100 | BZKL 16/8 Z | Z4.102.0880.0 | 100 |
| Polyamide to fasten the marking | 12 | 76.6 | 70 | BZKL 16/12 Z | Z4.102.1280.0 | 100 | BZKL 16/12 Z | Z4.102.1280.0 | 100 |
| plate | 16 | 98.2 | 91.8 | BZKL 16/16 Z | Z4.102.1680.0 | 100 | BZKL 16/16 Z | Z4.102.1680.0 | 100 |
| | 20 | 119.8 | 113.4 | BZKL 16/20 Z | Z4.102.2080.0 | 100 | BZKL 16/20 Z | Z4.102.2080.0 | 100 |
| Fastening pins | | | | | 05.592.1152.0 | | | 05.592.1152.0 | |
| Marked marking plates, 4 to | 4 | | | BZKL 16/4 ZB | Z4.802.0480.0 | 100 | BZKL 16/4 ZB | Z4.802.0480.0 | 100 |
| 20pole | to | | | to | to | | to | to | |
| | 20 | | | BZKL 16/20 ZB | Z4.802.2080.0 | 100 | BZKL 16/20 ZB | Z4.802.2080.0 | 100 |
| Jumper bars of E-Cu | | | | | | | | | |
| | 2 | 7.4 | | | 07.250.0027.0 | 10 | | 07.250.0027.0 | 10 |
| | 80 | 596 | | | 07.250.1627.0 | 10 | | 07.250.1627.0 | 10 |

# Divisible Europa terminal strips

EUROPA

**Material:**

Insulating housing: Polyamide 6 ivory Hardness test at 125 °C Glow-wire test with 850 °C Tracking test PTI 250 Clamping body: nickel-plated brass Wire protection: phosphor bronze Clamping screws: steel, zinc-plated and dichromated

Permanent temperature 100 °C
Permanent temperature 130 °C accord. to UL 746 B
Tracking resistance accord. to DIN IEC 112 CTI > 600.

Terminals with wire protection DS are fitted with a wire protection guard inside the clamping body, which prevents damage to the connected wire. All parts are captive in the insulating housing.
The clamping screws are secured against loosening and provide vibration-proof connections. The terminal strips are supplied with the clamping screws in the "open"

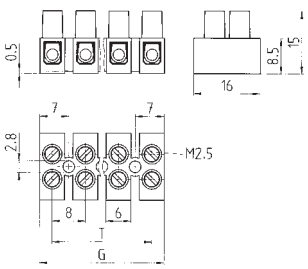


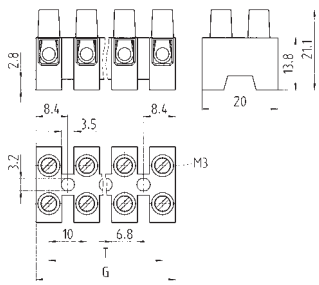


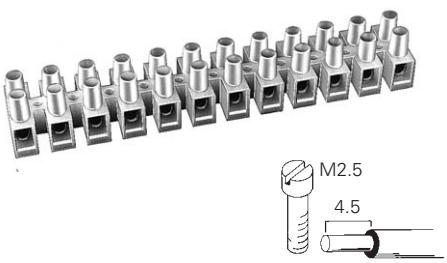


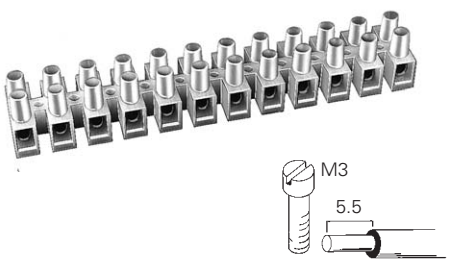


| | Type 4 E | 1.5 mm² | Type 6 EH | 4 mm² |
|---|---|---|---|---|
| | | with DS: 1 mm² | | with DS: up to 2.5 mm²/fine-stranded |
| EN 60998-1/-2-1 (fixed position) | 400 V; 17.5 A; | 0.75 – 1.5 mm² | 690 V; 24 A; | 1.0 – 2.5 mm² |
| Approvals | | | | |

| | Poles | G | T | Type | Part no. | Std. pack | G | T | Type | Part no. | Std. pack |
|---|---|---|---|---|---|---|---|---|---|---|---|
| without wire protection | 1 | 6 | – | 4 E/ 1 | 21.304.0153.0 | 5000 | 7 | – | 6 EH/ 1 | 21.312.0153.0 | 4000 |
| | 2 | 14 | 8 | 4 E/ 2 | 21.304.0253.0 | 2000 | 17 | 10 | 6 EH/ 2 | 21.312.0253.0 | 1500 |
| | 3 | 22 | 16 | 4 E/ 3 | 21.304.0353.0 | 2000 | 27 | 20 | 6 EH/ 3 | 21.312.0353.0 | 750 |
| | 4 | 30 | 24 | 4 E/ 4 | 21.304.0453.0 | 2000 | 37 | 30 | 6 EH/ 4 | 21.312.0453.0 | 1000 |
| | 5 | 38 | 32 | 4 E/ 5 | 21.304.0553.0 | 1000 | 47 | 40 | 6 EH/ 5 | 21.312.0553.0 | 500 |
| | 6 | 46 | 40 | 4 E/ 6 | 21.304.0653.0 | 1000 | 57 | 50 | 6 EH/ 6 | 21.312.0653.0 | 500 |
| | 7 | 54 | 48 | 4 E/ 7 | 21.304.0753.0 | 500 | 67 | 60 | 6 EH/ 7 | 21.312.0753.0 | 500 |
| | 8 | 62 | 56 | 4 E/ 8 | 21.304.0853.0 | 500 | 77 | 70 | 6 EH/ 8 | 21.312.0853.0 | 250 |
| | 9 | 70 | 64 | 4 E/ 9 | 21.304.0953.0 | 500 | 87 | 80 | 6 EH/ 9 | 21.312.0953.0 | 250 |
| | 10 | 78 | 72 | 4 E/10 | 21.304.1053.0 | 500 | 97 | 90 | 6 EH/10 | 21.312.1053.0 | 250 |
| | 11 | 86 | 80 | 4 E/11 | 21.304.1153.0 | 500 | 107 | 100 | 6 EH/11 | 21.312.1153.0 | 250 |
| | 12 | 94 | 88 | 4 E | 21.304.1253.0 | 500 | 117 | 110 | 6 EH | 21.312.1253.0 | 250 |
| | | | | | | | | | | | |
| with wire protection (DS) | 1 | 6 | – | 4 E/ 1 DS | 21.305.0153.0 | 5000 | 7 | – | 6 EH/ 1 DS | 21.313.0153.0 | 4000 |
| UL ratings: AWG No. 20-14 20 A (4 E); 22-16 10 A (4 E DS); 250 V; 600 V with PVC insulating spacer | 2 | 14 | 8 | 4 E/ 2 DS | 21.305.0253.0 | 2000 | 17 | 10 | 6 EH/ 2 DS | 21.313.0253.0 | 1500 |
| | 3 | 22 | 16 | 4 E/ 3 DS | 21.305.0353.0 | 2000 | 27 | 20 | 6 EH/ 3 DS | 21.313.0353.0 | 750 |
| | 4 | 30 | 24 | 4 E/ 4 DS | 21.305.0453.0 | 2000 | 37 | 30 | 6 EH/ 4 DS | 21.313.0453.0 | 1000 |
| | 5 | 38 | 32 | 4 E/ 5 DS | 21.305.0553.0 | 1000 | 47 | 40 | 6 EH/ 5 DS | 21.313.0553.0 | 500 |
| CSA ratings: AWG No. 22-16 10 A (4 E, 4 E DS); 300 V; 600 V with PVC insulating spacer | 6 | 46 | 40 | 4 E/ 6 DS | 21.305.0653.0 | 1000 | 57 | 50 | 6 EH/ 6 DS | 21.313.0653.0 | 500 |
| | 7 | 54 | 48 | 4 E/ 7 DS | 21.305.0753.0 | 500 | 67 | 60 | 6 EH/ 7 DS | 21.313.0753.0 | 500 |
| | 8 | 62 | 56 | 4 E/ 8 DS | 21.305.0853.0 | 500 | 77 | 70 | 6 EH/ 8 DS | 21.313.0853.0 | 250 |
| – with insulating spacer and fastening screws from insulating material 800 V 4E (DS), 6E (DS), 6EH (DS) | 9 | 70 | 64 | 4 E/ 9 DS | 21.305.0953.0 | 500 | 87 | 80 | 6 EH/ 9 DS | 21.313.0953.0 | 250 |
| | 10 | 78 | 72 | 4 E/10 DS | 21.305.1053.0 | 500 | 97 | 90 | 6 EH/10 DS | 21.313.1053.0 | 250 |
| – 1pole version (without own fastening device) no VDE approval | 11 | 86 | 80 | 4 E/11 DS | 21.305.1153.0 | 500 | 107 | 100 | 6 EH/11 DS | 21.313.1153.0 | 250 |
| | 12 | 94 | 88 | 4 E DS | 21.305.1253.0 | 500 | 117 | 110 | 6 EH DS | 21.313.1253.0 | 250 |
| **Accessories** | | | | | | | | | | | |
| Insulating spacer from PVC for higher voltages | | | | | | | | | | | |
| (2 to 12pole available) 2pole | | | | | | | | | | | |
| 12pole | | | | | | | | | | | |
| 1000 mm long | | | | | | | | | | | |
| | | | | | | | | | | | |
| | | | | | 07.469.0280.0 | 100 | | | | | |
| | | | | | 07.469.1280.0 | 100 | | | | | |
| | | | | | 07.469.1380.0 | | | | | | |

# Divisible Europa terminal strips

EUROPA

**Material:**

Insulating housing: Polyamide 6 ivory
Hardness test at 125 °C
Glow-wire test with 850 °C
Tracking test PTI 250
Clamping body: nickel-plated brass
Wire protection: phosphor bronze
Clamping screws: steel, zinc-plated and dichromated

Permanent temperature 100 °C
Permanent temperature 130 °C accord. to UL 746 B
Tracking resistance accord. to DIN IEC 112 CTI > 600.

Terminals with wire protection DS are fitted with a wire protection guard inside the clamping body, which prevents damage to the connected wire. All parts are captive in the insulating housing. The clamping screws are secured against loosening and provide vibration-proof connections.
The terminal strips are supplied with the clamping screws in the "open" position.

EN 60998-1/-2-1 (fixed position)
EN60335-1/DIN VDE 0700 T1
Approvals

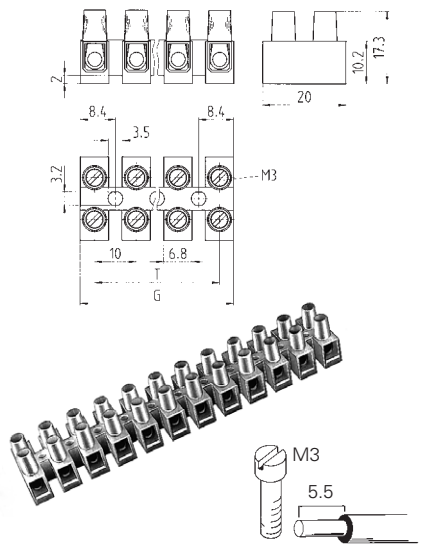


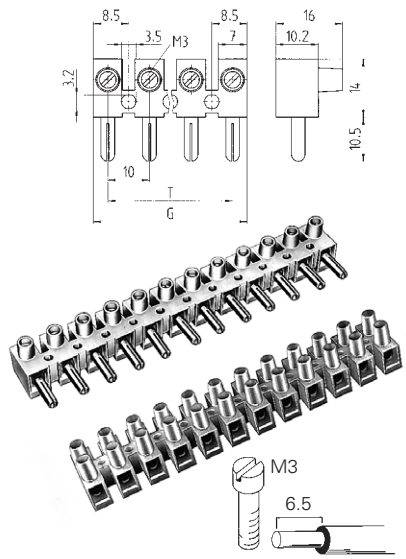


**Male terminal strip** without wire protection
## Type 6 ES

**Female terminal strip** without wire protection
## Type 6 E — 4 mm²

AC 400 V; 10 A; 1 – 1.5 mm²/1 – 2.5 mm²*)

## Type 6 E — 4 mm²

with DS: up to 2.5 mm²/fine-stranded
400 V; 24 A; 1.0 – 2.5 mm²

| | Poles | G | T | Type | Part no. | Std. pack | G | T | Type | Part no. | Std. pack |
|---|---|---|---|---|---|---|---|---|---|---|---|
| without wire protection | 1 | 7 | – | 6 E/ 1 | 21.310.0153.0 | 4000 | 7 | – | 6 ES/ 1 | 22.310.0153.0 | 100 |
| UL ratings: AWG no. 20-12 20 A (6 E); 22-14 15 A (6 E DS); 22-12 20 A (6 ES, 6 E Female terminal strip); 22-8 40 A (10 E); 22-12 20 A (10 E DS); 22-8 50/65 A (16 E)-field/factory wiring; 22-10 30/40 A (16 E DS)-field/factory wiring; 20-4 70 A (20 E); 22-6 65/75 A (20 E DS)-field/factory wiring; 300 V (600 V with PVC insulating spacer) | 2 | 17 | 10 | 6 E/ 2 | 21.310.0253.0 | 1500 | 17 | 10 | 6 ES/ 2 | 22.310.0253.0 | 100 |
| | 3 | 27 | 20 | 6 E/ 3 | 21.310.0353.0 | 1500 | 27 | 20 | 6 ES/ 3 | 22.310.0353.0 | 100 |
| | 4 | 37 | 30 | 6 E/ 4 | 21.310.0453.0 | 1000 | 37 | 30 | 6 ES/ 4 | 22.310.0453.0 | 100 |
| | 5 | 47 | 40 | 6 E/ 5 | 21.310.0553.0 | 500 | 47 | 40 | 6 ES/ 5 | 22.310.0553.0 | 100 |
| | 6 | 57 | 50 | 6 E/ 6 | 21.310.0653.0 | 500 | 57 | 50 | 6 ES/ 6 | 22.310.0653.0 | 100 |
| | 7 | 67 | 60 | 6 E/ 7 | 21.310.0753.0 | 50 | 67 | 60 | 6 ES/ 7 | 22.310.0753.0 | 50 |
| | 8 | 77 | 70 | 6 E/ 8 | 21.310.0853.0 | 50 | 77 | 70 | 6 ES/ 8 | 22.310.0853.0 | 50 |
| | 9 | 87 | 80 | 6 E/ 9 | 21.310.0953.0 | 50 | 87 | 80 | 6 ES/ 9 | 22.310.0953.0 | 50 |
| | 10 | 97 | 90 | 6 E/10 | 21.310.1053.0 | 50 | 97 | 90 | 6 ES/10 | 22.310.1053.0 | 50 |
| | 12 | 117 | 110 | 6 E | 21.310.1253.0 | 250 | 117 | 110 | 6 ES | 22.310.1253.0 | 50 |
| | | | | | | | Female terminal strip without wire protection | | | | |
| with wire protection (DS) | 1 | 7 | – | 6 E/ 1 DS | 21.311.0153.0 | 4000 | 7 | – | 6 E/ 1 | 99.261.3521.9 | 200 |
| CSA ratings: AWG no. 22-14 20 A (6 E, 6 E DS)); 22-14 20 A (6 ES, 6 E Female terminal strip); 22-12 25 A (10 E, 10 E DS); 20-10 40 A (16 E, 16 E DS); 18-8 65 A (20 E, 20 E DS); 300 V (600 V with PVC insulating spacer); – with insulating spacer and fastening screws from insulating material 800 V 6 E (DS); – with insulating spacer and fastening screws from insulating material 1000 V 10 E (DS), 16 E (DS), 20 E (DS); – 1pole version (without own fastening device) no VDE approval; 20 E, 20 EDS: 18-6 AWG, 65 A, 600 V - no spacer required | 2 | 17 | 10 | 6 E/ 2 DS | 21.311.0253.0 | 1500 | 17 | 10 | 6 E/ 2 | 99.262.3521.9 | 100 |
| | 3 | 27 | 20 | 6 E/ 3 DS | 21.311.0353.0 | 1500 | 27 | 20 | 6 E/ 3 | 99.263.3521.9 | 100 |
| | 4 | 37 | 30 | 6 E/ 4 DS | 21.311.0453.0 | 1000 | 37 | 30 | 6 E/ 4 | 99.264.3521.9 | 100 |
| | 5 | 47 | 40 | 6 E/ 5 DS | 21.311.0553.0 | 500 | 47 | 40 | 6 E/ 5 | 99.265.3521.9 | 500 |
| | 6 | 57 | 50 | 6 E/ 6 DS | 21.311.0653.0 | 500 | 57 | 50 | 6 E/ 6 | 99.266.3521.9 | 100 |
| | 7 | 67 | 60 | 6 E/ 7 DS | 21.311.0753.0 | 50 | 67 | 60 | 6 E/ 7 | 99.267.3521.9 | 50 |
| | 8 | 77 | 70 | 6 E/ 8 DS | 21.311.0853.0 | 50 | 77 | 70 | 6 E/ 8 | 99.268.3521.9 | 50 |
| | 9 | 87 | 80 | 6 E/ 9 DS | 21.311.0953.0 | 50 | 87 | 80 | 6 E/ 9 | 99.269.3521.9 | |
| | 10 | 97 | 90 | 6 E/10 DS | 21.311.1053.0 | 50 | 97 | 90 | 6 E/10 | 99.270.3521.9 | 50 |
| | 12 | 117 | 110 | 6 E DS | 21.311.1253.0 | 250 | 117 | 110 | 6 E | 99.272.3521.9 | 50 |
| **Accessories** | | | | | | | | | | | |
| Jumper bars E-Cu | 2 | | | VB 11/1/2 | 07.250.0227.0 | 100 | | | | | |
| | 3 | | | VB 11/1/3 | 07.250.0327.0 | 100 | | | | | |
| | 6 | 52.8 | | VB 11/1/6 | 07.250.0627.0 | 50 | | | | | |
| | 12 | 112.8 | | VB 11/1/12 | 07.250.1027.0 | 50 | | | | | |
| Insulating spacer PVC polycarbonate-yellow | | | | | | | | | | | |
| for higher voltages 1000 mm | | 1000.0 | | | 07.470.1380.0 | 1 | | | | | |
| Wire guard Polycarbonat-yellow | 2 – | 20.5 | | LH GE/2 | 07.470.2256.0 | 100 | | | | | |
| | 12 | 120 | | LH GE/12 | 07.470.3256.0 | 10 | *) flexible wire/rigid wire | | | | |

# europa

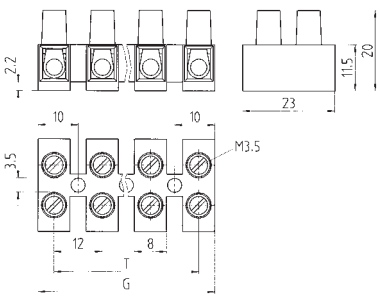


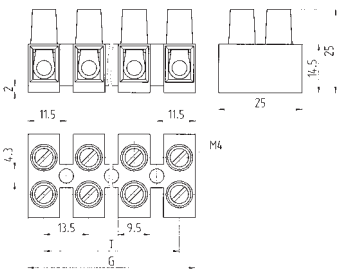


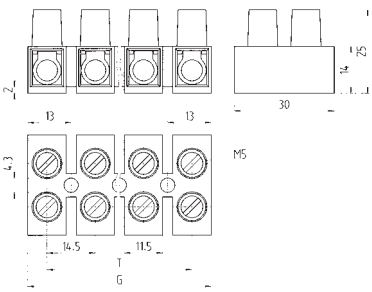


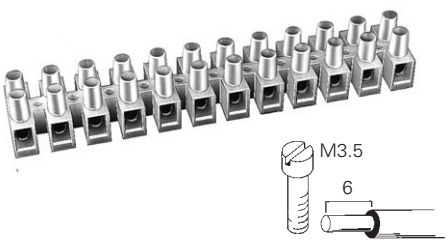


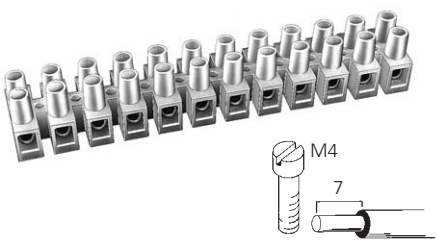


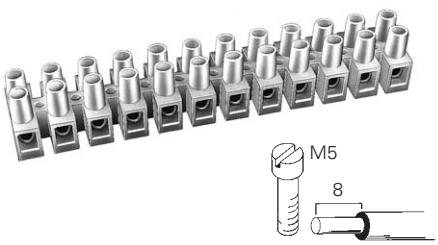


## Type 10 E — 6 mm²

with DS: up to 4 mm²/fine-stranded

500 V; 32 A; 1.5 – 4 mm²

| G | T | Type | Part no. | Std. pack |
|---|---|---|---|---|
| 8 | – | 10 E/ 1 | 21.330.5153.0 | 2000 |
| 20 | 12 | 10 E/ 2 | 21.330.5253.0 | 1000 |
| 32 | 24 | 10 E/ 3 | 21.330.5353.0 | 500 |
| 44 | 36 | 10 E/ 4 | 21.330.5453.0 | 250 |
| 56 | 48 | 10 E/ 5 | 21.330.5553.0 | 250 |
| 68 | 60 | 10 E/ 6 | 21.330.5653.0 | 250 |
| 80 | 72 | 10 E/ 7 | 21.330.5753.0 | 250 |
| 92 | 84 | 10 E/ 8 | 21.330.5853.0 | 200 |
| 104 | 96 | 10 E/ 9 | 21.330.5953.0 | 200 |
| 116 | 108 | 10 E/10 | 21.330.6053.0 | 200 |
| 140 | 132 | 10 E | 21.330.6253.0 | 100 |
| 8 | – | 10 E/ 1 DS | 21.331.5153.0 | 2000 |
| 20 | 12 | 10 E/ 2 DS | 21.331.5253.0 | 1000 |
| 32 | 24 | 10 E/ 3 DS | 21.331.5353.0 | 500 |
| 44 | 36 | 10 E/ 4 DS | 21.331.5453.0 | 250 |
| 56 | 48 | 10 E/ 5 DS | 21.331.5553.0 | 250 |
| 68 | 60 | 10 E/ 6 DS | 21.331.5653.0 | 250 |
| 80 | 72 | 10 E/ 7 DS | 21.331.5753.0 | 250 |
| 92 | 84 | 10 E/ 8 DS | 21.331.5853.0 | 200 |
| 104 | 96 | 10 E/ 9 DS | 21.331.5953.0 | 200 |
| 116 | 108 | 10 E/10 DS | 21.331.6053.0 | 200 |
| 140 | 132 | 10 E DS | 21.331.6253.0 | 100 |
| | | 30pol. VB 9786 M | 07.253.0027.0 | 10 |
| 100 | | | 07.471.1380.0 | 50 |

## Type 16 E — 10 mm²

with DS: up to 6 mm²/fine-stranded

500 V; 41 A; 2.5 – 6 mm²

| G | T | Type | Part no. | Std. pack |
|---|---|---|---|---|
| 9.5 | – | 16 E/ 1 | 21.340.5153.0 | 200 |
| 23 | 13.5 | 16 E/ 2 | 21.340.5253.0 | 100 |
| 36.5 | 27 | 16 E/ 3 | 21.340.5353.0 | 50 |
| 50 | 40.5 | 16 E/ 4 | 21.340.5453.0 | 50 |
| 63.5 | 54 | 16 E/ 5 | 21.340.5553.0 | 50 |
| 77 | 67.5 | 16 E/ 6 | 21.340.5653.0 | 50 |
| 90.5 | 81 | 16 E/ 7 | 21.340.5753.0 | 40 |
| 104 | 94.5 | 16 E/ 8 | 21.340.5853.0 | 40 |
| 117.5 | 108 | 16 E/ 9 | 21.340.5953.0 | 20 |
| 131 | 121.5 | 16 E/10 | 21.340.6053.0 | 20 |
| 158 | 148.5 | 16 E | 21.340.6253.0 | 20 |
| 9.5 | – | 16 E/ 1 DS | 21.341.5153.0 | 200 |
| 23 | 13.5 | 16 E/ 2 DS | 21.341.5253.0 | 100 |
| 36.5 | 27 | 16 E/ 3 DS | 21.341.5353.0 | 50 |
| 50 | 40.5 | 16 E/ 4 DS | 21.341.5453.0 | 50 |
| 63.5 | 54 | 16 E/ 5 DS | 21.341.5553.0 | 50 |
| 77 | 67.5 | 16 E/ 6 DS | 21.341.5653.0 | 50 |
| 90.5 | 81 | 16 E/ 7 DS | 21.341.5753.0 | 40 |
| 104 | 94.5 | 16 E/ 8 DS | 21.341.5853.0 | 40 |
| 117.5 | 108 | 16 E/ 9 DS | 21.341.5953.0 | 20 |
| 131 | 121.5 | 16 E/10 DS | 21.341.6053.0 | 20 |
| 158 | 148.5 | 16 E DS | 21.341.6253.0 | 20 |
| | | VB16 E/2 | 07.256.8227.0 | 50 |
| | | 30pol. VB 16 E/M | 07.256.8027.0 | 10 |
| 100 | | | 07.472.1380.0 | 10 |

## Type 20 E — 16 mm²

with DS: up to 10 mm²/fine-stranded

500 V; 57 A; 4.0 – 10 mm²

| G | T | Type | Part no. | Std. pack |
|---|---|---|---|---|
| 11.5 | – | 20 E/ 1 | 21.340.3153.0 | 200 |
| 26 | 14.5 | 20 E/ 2 | 21.340.3253.0 | 100 |
| 40.5 | 29 | 20 E/ 3 | 21.340.3353.0 | 50 |
| 55 | 43.5 | 20 E/ 4 | 21.340.3453.0 | 50 |
| 69.5 | 58 | 20 E/ 5 | 21.340.3553.0 | 50 |
| 84 | 72.5 | 20 E/ 6 | 21.340.3653.0 | 50 |
| 98.5 | 87 | 20 E/ 7 | 21.340.3753.0 | 50 |
| 113 | 101.5 | 20 E/ 8 | 21.340.3853.0 | 50 |
| 127.5 | 116 | 20 E/ 9 | 21.340.3953.0 | 20 |
| 142 | 130.5 | 20 E/10 | 21.340.4053.0 | 20 |
| 171 | 159.5 | 20 E | 21.340.4253.0 | 20 |
| 11.5 | – | 20 E/ 1 DS | 21.341.3153.0 | 200 |
| 26 | 14.5 | 20 E/ 2 DS | 21.341.3253.0 | 100 |
| 40.5 | 29 | 20 E/ 3 DS | 21.341.3353.0 | 50 |
| 55 | 43.5 | 20 E/ 4 DS | 21.341.3453.0 | 50 |
| 69.5 | 58 | 20 E/ 5 DS | 21.341.3553.0 | 50 |
| 84 | 72.5 | 20 E/ 6 DS | 21.341.3653.0 | 50 |
| 98.5 | 87 | 20 E/ 7 DS | 21.341.3753.0 | 50 |
| 113 | 101.5 | 20 E/ 8 DS | 21.341.3853.0 | 50 |
| 127.5 | 116 | 20 E/ 9 DS | 21.341.3953.0 | 20 |
| 142 | 130.5 | 20 E/10 DS | 21.341.4053.0 | 20 |
| 171 | 159.5 | 20 E DS | 21.341.4253.0 | 20 |
| 100 | | | 07.473.1380.0*) | 10 |

*) CSA does **not** require for 20 E, 20 EDS, 600 V ratings

# Marking accessories for divisible terminal strips

EUROPA

**Material:**

White, roughened plastic, 0.8 mm thick
Permanent temperature up to 70 °C.

Special plates to mark the terminals of clamping, solder and pluggable terminal strips are available. They can be marked before or after mounting or wiring of the terminals by using special ink Pelikan No. 32 or felt-tip pen "Feinmarker 23" by Faber Castell, or ink pen "Foliograph" by Riepe Werk Hamburg. Or they can be sealed with waterproof stamp color Pelikan type 24.

We can also supply marked plates with normal marking for larger quantities.

Prices upon request:

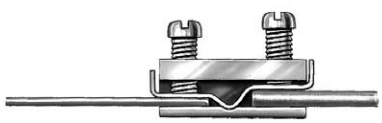

| Suitable for types | Poles | Type | Part no. | Std. pack | Suitable for types | Type | Part no. | Std. pack |
|---|---|---|---|---|---|---|---|---|
| | 2 | 8130/ 2 BZ | 04.033.0080.0 | 100 | | 10 E/ 2 BZ | 04.070.0280.0 | 100 |
| | 3 | 8130/ 3 BZ | 04.033.0180.0 | 100 | | 10 E/ 3 BZ | 04.070.0380.0 | 100 |
| | 4 | 8130/ 4 BZ | 04.033.0280.0 | 100 | | 10 E/ 4 BZ | 04.070.0480.0 | 100 |
| 4 E | 5 | 8130/ 5 BZ | 04.033.0380.0 | 100 | 10 E | 10 E/ 5 BZ | 04.070.0580.0 | 100 |
| | 6 | 8130/ 6 BZ | 04.033.0480.0 | 100 | | 10 E/ 6 BZ | 04.070.0680.0 | 100 |
| | 12 | 8130/12 BZ | 04.033.1080.0 | 100 | | 10 E/12 BZ | 04.070.1280.0 | 100 |
| | 1 meter | 8130/ MBZ | 04.033.1180.0 | 1 | | 10 E/MBZ | 04.070.1380.0 | 1 |
| | | | | | | | | |
| | | | | | | | | |
| | 2 | 8006/ 2 BZ | 04.030.0080.0 | 100 | | 10 E/ 2 DBZ | 04.071.0280.0 | 100 |
| | 3 | 8006/ 3 BZ | 04.030.0180.0 | 100 | | 10 E/ 3 DBZ | 04.071.0380.0 | 100 |
| | 4 | 8006/ 4 BZ | 04.030.0280.0 | 100 | 10 E | 10 E/ 4 DBZ | 04.071.0480.0 | 100 |
| 6 E | 5 | 8006/ 5 BZ | 04.030.0380.0 | 100 | with marking | 10 E/ 5 DBZ | 04.071.0580.0 | 100 |
| | 6 | 8006/ 6 BZ | 04.030.0480.0 | 100 | surface on both | 10 E/ 6 DBZ | 04.071.0680.0 | 100 |
| | 12 | 8006/12 BZ | 04.030.1080.0 | 100 | sides | 10 E/12 DBZ | 04.071.1280.0 | 100 |
| | 1 meter | 8006/MBZ | 04.030.1180.0 | 1 | | 10 E/MDBZ | 04.071.1380.0 | 1 |
| | | | | | | | | |
| | | | | | | | | |
| | 2 | 8016/ 2 BZ | 04.080.0080.0 | 100 | | 16 E/ 2 BZ | 04.090.0280.0 | 100 |
| | 3 | 8016/ 3 BZ | 04.080.0180.0 | 100 | | 16 E/ 3 BZ | 04.090.0380.0 | 100 |
| | 4 | 8016/ 4 BZ | 04.080.0280.0 | 100 | | 16 E/ 4 BZ | 04.090.0480.0 | 100 |
| 20 E | 5 | 8016/ 5 BZ | 04.080.0380.0 | 100 | 16 E | 16 E/ 5 BZ | 04.090.0580.0 | 100 |
| | 6 | 8016/ 6 BZ | 04.080.0480.0 | 100 | | 16 E/ 6 BZ | 04.090.0680.0 | 100 |
| | 12 | 8016/12 BZ | 04.080.1080.0 | 100 | | 16 E/12 BZ | 04.090.1280.0 | 100 |
| | 1 meter | 8016/MBZ | 04.080.1180.0 | 1 | | 16 E/MBZ | 04.090.1380.0 | 1 |

# Lighting terminals

# appliance TERMINALS

**Material:**

Insulating parts: glazed porcelain or melamine type 150, tracking resistant
Clamping body: nickel-plated brass;
Wire protection: phosphor bronze;
Clamping screws: steel, zinc-plated and dichromated

Terminals with wire protection DS are fitted with a wire protection guard inside the clamping body, which prevents damage to the connected wire.

Temperature range: -40 ˚C → +150 ˚C

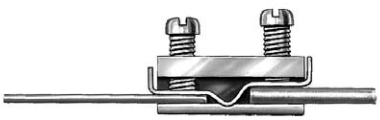



| | Poles | mm² | Type | Part no. | Std. pack | L | W | H | Distance Ø, Mount. holesFasten. screws DIN 84 |
|---|---|---|---|---|---|---|---|---|---|
| Lighting terminals | 1 | | 547 | 14.100.0170.0 | 300 | 22 | 10 | 15 | |
| Dimensions in mm | 2 | 2.5 | 548 | 14.100.0270.0 | 200 | 22 | 18 | 15 | |
| | 3 | | 549 | 14.100.0370.0 | 100 | 25 | 22 | 15 | |

M3

Insulating part: Glazed porcelain Wire strip length: 6 mm

DIN VDE 0110 (position not fixed)
400 V/2.5 kV/1
250 V/2.5 kV/2

# Appliance terminals

# appliance TERMINALS

**Material:**

Insulating parts: glazed porcelain or melamine type 150, tracking resistant
Clamping body: nickel-plated brass;
Wire protection: phosphor bronze;
Clamping screws: steel, zinc-plated and dichromated

Terminals with wire protection DS are fitted with a wire protection guard inside the clamping body, which prevents damage to the connected wire.

Temperature range for porcelain: -40 ˚C → +150 ˚C

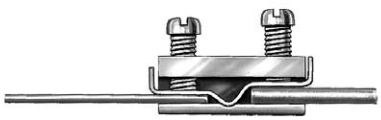

| | Poles | mm² | Type | Part no. | Std. pack | L | W | H | Distance | Ø, Mount. holes | Fasten. screws DIN 84 |
|---|---|---|---|---|---|---|---|---|---|---|---|
| Appliance terminal with mounting hole | 2 | | 1032 | 14.200.0270.0 | 100 | 24 | | | – | | |
| Dimensions in mm<br>M3<br>M3.5 | 2 | | 1032 DS | 14.201.0270.0 | 100 | 24 | | | – | | |
| | 2 | | 1032 M 3,5 | 14.200.1270.0 | 100 | 38 | 20 | 16 | 13 | 4.5 | M4 |
| | | | | | | 38 | | | 13 | | |
| Insulating part: Glazed porcelain<br>Wire strip length: 6 mm DIN VDE 0110 (position not fixed)<br>400 V/4 kV/2 | 3 | | 1033 | 14.200.0370.0 | 50 | | | | | | |
| | 3 | 2.5 | 1033 DS | 14.201.0370.0 | 50 | | | | | | |
| | 3 | | 1033 M 3,5 | 14.200.1370.0 | 50 | | | | | | |
| | | | | | | 39 | | | – | | |
| M3 = 10 A<br>M3.5 = 16 A | | | | | | 39 | | | – | | |
| | 4 | | 1033 A | 14.200.0470.0 | 50 | | | | | | |
| | 4 | | 1033 A DS | 14.201.0470.0 | 50 | | | | | | |
| | 4 | | 1033 M 3,5 | 14.200.1470.0 | 50 | | | | | | |
| Appliance terminal accord. to DIN 46284 | 2 | | 2 DIN 46284 ST | 14.210.0270.0 | 100 | 20 | | | – | | |
| Insulating part: Glazed porcelain<br>Wire strip length: 6 mm DIN VDE 0110 (fixed position)<br>400 V/6 kV/3 | 2 | | 2 D DIN 46284 ST | 14.211.0270.0 | 100 | 20 | | | – | | |
| | | 2.5 | | | | 21 | 18 | | | 3.3 | M3 |
| | 3 | | 3 DIN 46284 ST | 14.210.0370.0 | 100 | 34 | | | 12.5 | | |
| | 3 | | 3 D DIN 46284 ST | 14.211.0370.0 | 100 | 34 | | | 12.5 | | |
| Appliance terminal with mounting hole and base rail | 2 | 2.5 | 1031 | 14.220.0270.0 | 100 | 24 | 25 | 18 | – | 4.5 | M4 |
| | 3 | 2.5 | 1029 | 14.220.0370.0 | 50 | 36 | | | 13 | | |
| | 2 | 6 | 1027 | 14.230.0270.0 | 30 | 36 | 36 | 28 | – | 5.8 | M5 |
| M3 (2.5 mm²)<br>M5 (6 mm²) | | | | | | | | | | | |
| Insulating part: Glazed porcelain<br>Wire strip length: 6 mm<br>DIN VDE 0110 (position not fixed)<br>400 V/6 kV/3 | | | | | | | | | | | |
| Appliance terminal 4pole | 4 | 2.5 | 1033 A P KR | 14.290.0440.0 | 100 | 40 | 20 | 18.5 | – | 5.3 | M5 |
| | 4 | 2.5 | 1033 A P DS KR | 14.291.0440.0 | 100 | | | | | | |
| M3 | | | | | | | | | | | |
| Insulating part: melamine type 150, tracking resistant<br>Wire strip length:<br>6 mm DIN VDE 0110 (fixed position)<br>400 V/6 kV/3 | | | | | | | | | | | |

# Modular terminals for mounting rail 10 x 2.5 mm

appliance

with insulating housing from unglazed steatite



| | DIN VDE 0110 | Wire strip length | Type | Part no. | Std. pack | L | B | mm² solid/stranded/fine-stranded | | with ferrule | Cl.screw |
|---|---|---|---|---|---|---|---|---|---|---|---|
| Modular terminal without wire protection | 250 V/4 kV/3 | 7 | 1038 A | 30.400.0675.0 | 125 | 19 | 8.5 ± 0.3 | 6 | 4 | 2.5 | M3 |
| Dimensions in mm | 250 V/4 kV/3 | 10 | 1038 B | 30.400.1075.0 | 100 | 24 | 12.5 ± 0.35 | 10 | 10 | 6 | M4 |
| | 400 V/6 kV/3 | 10 | 1038 C | 30.400.1675.0 | 75 | 28 | 15 ± 0.4 | 16 | 10 | 10 | M5 |
| Modular terminal with wire protection | 250 V/4 kV/3 | 6 | 1038 A DS | 30.401.0475.0 | 125 | 19 | 8.5 ± 0.3 | 4 | 4 | 1.5 | M3 |
| | 250 V/4 kV/3 | 7 | 1038 B DS | 30.401.0675.0 | 100 | 24 | 12.5 ± 0.35 | 6 | 6 | 2.5 | M4 |
| | 400 V/6 kV/3 | 7 | 1038 C DS | 30.401.1075.0 | 75 | 28 | 15 ± 0.4 | 10 | 10 | 4 | M5 |
| **Accessories** | | | | | | | | | | | |
| 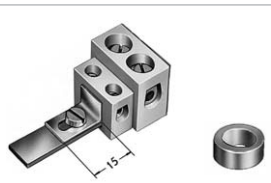  | | | | | | | | | | | |
| Mounting rail: steel, galv. zinc-plated, L = 1 m | | | 1039 M | 98.060.0000.0 | 50 | | | | | | |
| 10 x 2.5 mm | | | | | | | | | | | |
| End bracket | | | 1039 W | 05.522.0725.0 | 250 | | | | | | |
| Distance ring: outside Ø 7, inside Ø 4.5 | | | 1036 R | 05.590.3121.0 | 500 | | | | | | |

# Plug/screw terminal strips

# KL 20 PA

**Material:**

Insulating housing: Polyamide 6.6, tracking resistant

**Clamping body with tab connector:**
- nickel-plated brass – for KL 20 and KL 30 –
- for KL 24 tin-plated steel

Wire protection: phosphor bronze, nickel-plated Clamping screws: steel, zinc-plated and dichromated

**Insulating part:**

| | |
|---|---|
| Hardness test | at 125 °C |
| Glow-wire test | with 850 °C |
| Tracking test | PTI 600 |

Temperature range: -40 ˚C → +100 ˚C

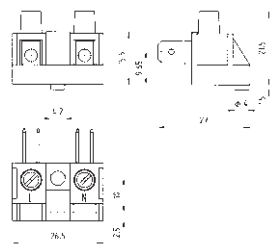

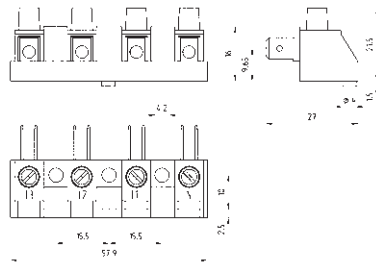

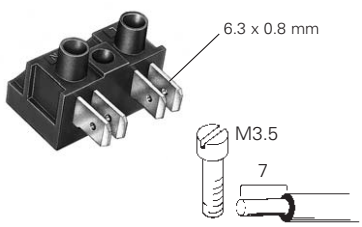


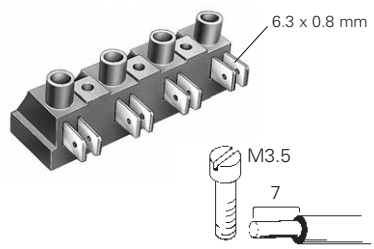


| | Type KL 20/2 PA | 2pole | Type KL 20/4 PA | 4pole |
|---|---|---|---|---|
| EN 60998-1/-2-1; EN 61210; (fixed position) | AC 400 V; */** A; | ***/2 x (6.3 x 0.8 mm) | AC 400 V; */** A; | ***/2 x (6.3 x 0.8 mm) |
| UL-ratings | | | | |
| CSA ratings | 300 V; 16 A; | No. 22 – 14 AWG | 300 V; 16 A; | No. 22 – 14 AWG |
| Approvals | | | | |

| | Poles | Type | Part no. | Std. pack | Type | Part no. | Std. pack |
|---|---|---|---|---|---|---|---|
| without wire protection | 2 | KL 20/2 PA | 29.500.0253.0 | 750 | | | |
| | 3 | | | | | | |
| | 4 | | | | KL 20/4 PA | 29.500.0353.0 | 50 |
| with wire protection (DS) | | | | | | | |
| | 2 | KL 20/2 DS PA | 29.500.1253.0 | 750 | | | |
| | 3 | | | | | | |
| | 4 | | | | KL 20/4 DS PA | 29.500.1353.0 | 50 |
| | 5 | | | | | | |

* 24 A screw clamp terminal with 2.5 mm² conductor

** 12 A tab connector with 2.5 mm² conductor

*** 1 – 2.5 mm² rigid/flexible
1 – 4 mm² rigid

CCA/DE

# KL 20

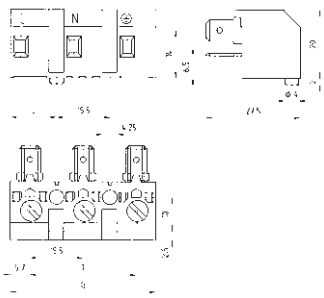

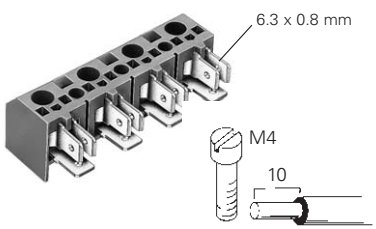


## Type KL 24 — 2 to 5pole

AC 400 V; */** A; ***/3 x (6.3 x 0.8 mm)
300 V; 16 A; No. 22 – 12 AWG
300 V; 20 A; No. 22 – 14 AWG

| Type | Part no. | Std. pack |
|---|---|---|
| KL 24/2 | 29.500.9253.0 | 1000 |
| KL 24/3 | 29.500.9353.0 | 500 |
| KL 24/4 | 29.500.9453.0 | 500 |
| KL 24/5 | 29.500.9553.0 | 250 |

Pole designation
2pole = L, N,
3pole = L, N, ⏚
5pole = L3, L2, L1, N, ⏚

Dimensions

| Poles | T | G |
|---|---|---|
| 2 | 15.5 | 27 |
| 3 | 31 | 42.5 |
| 4 | 46.5 | 58 |
| 5 | 62 | 73.5 |

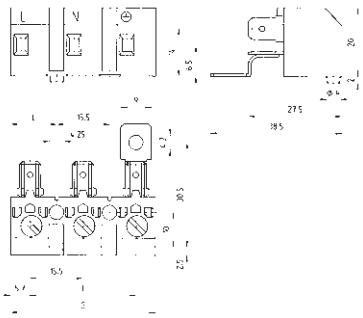

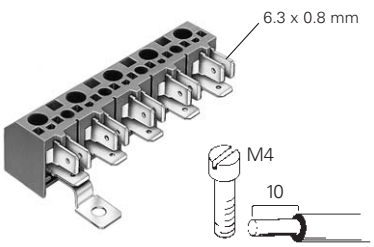


## Type KL 24 SL — 3, 5pole

AC 400 V; */** A; ***/3 x (6.3 x 0.8 mm)
300 V; 20 A; No. 22 – 14 AWG

| Type | Part no. | Std. pack |
|---|---|---|
| KL 24/3 SL | 29.502.9353.0 | 500 |
| KL 24/5 SL | 29.502.9553.0 | 250 |

Pole designation
3pole = L, N, ⏚
5pole = L3, L2, L1, N, ⏚

Dimensions

| Poles | T | G |
|---|---|---|
| 3 | 31 | 42.5 |
| 5 | 62 | 73.5 |

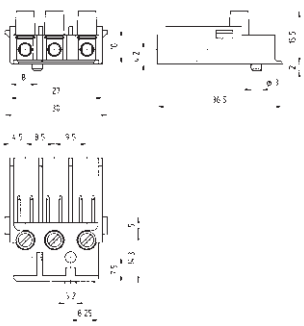

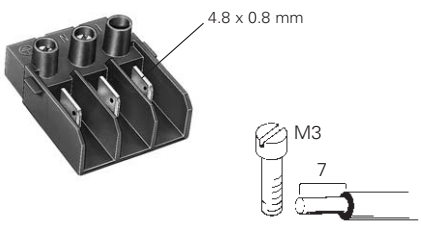


## Type KL 30/3 PA — 3pole

AC 400 V; */** A; ***/2 x (4.8 x 0.8 mm)
150 V; 10 A; No. 22 – 12 AWG
150 V; 10 A; No. 22 – 14 AWG

| Type | Part no. | Std. pack |
|---|---|---|
| KL 30/3 PA | 29.500.3053.0 | 500 |
| KL 30/3 DS PA | 29.500.4053.0 | 500 |

# Terminal box KBD

**Material:**

Insulating part: melamine type 150, tracking resistant
Clamping body and cover fastening screws: nickel-plated brass
Clamping screws: steel, zinc-plated and dichromated
Wire protection: phosphor bronze

T = (Number of poles -1) x 12
G = T + 30

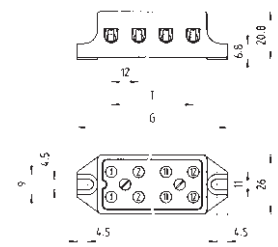

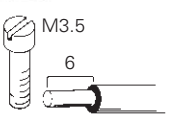


with DS up to 2.5 mm²/fine-stranded

| | | |
|---|---|---|
| EN 60998-1/-2-1 | | 500 V; 32 A; |
| Rated cross section | solid | 4 mm² |
| Rated cross section | fine stranded | 2.5 mm² |
| Approvals | | |

| | Poles | G | Type | Part no. | Std. pack |
|---|---|---|---|---|---|
| with female terminals and | 2 | 42 | KBD 1/ 2 KR | 28.121.0240.0 | 50 |
| wire protection | 3 | 54 | KBD 1/ 3 KR | 28.121.0340.0 | 40 |
| | 4 | 66 | KBD 1/ 4 KR | 28.121.0440.0 | 30 |
| | | | | | |
| | 5 | 78 | KBD 1/ 5 KR | 28.121.0540.0 | 25 |
| | 6 | 90 | KBD 1/ 6 KR | 28.121.0640.0 | 20 |
| | 7 | 102 | KBD 1/ 7 KR | 28.121.0740.0 | |
| | | | | | |
| | 8 | 114 | KBD 1/ 8 KR | 28.121.0840.0 | 20 |
| | 10 | 138 | KBD 1/10 KR | 28.121.1040.0 | 15 |
| | 12 | 162 | KBD 1/12 KR | 28.121.1240.0 | 15 |

# Distribution terminal strips for plug and screw connections

# KL 17 N

**Material:**

Insulating part: Polyamid 66 ivory
Permanent temperature 100 °C
Permanent temperature 125 °C accord. to UL 746 B
(All indicated temperatures include the power load caused by the operation)

Tracking resistance accord. to DIN IEC 112. CTI > 600
Hardness test at 125 °C
Glow-wire test with 850 °C
Tracking test PTI 600

– with insulating spacer 400 V

** 24 A screw clamp terminal with 2.5 mm² conductor
12 A tab connector with 1.5 mm² conductor

CSA: 300 A, 20 A, 22 – 12 AWG

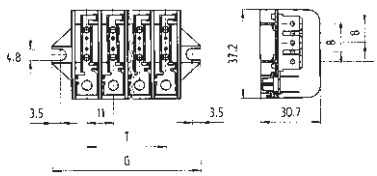

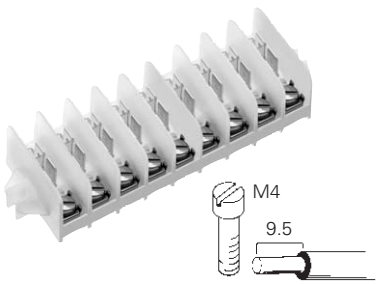


EN 60998-1/-2-1; EN 61210 (fixed position)

**Distribution terminal strip** for plug connections
## Type KL 17 N/*.../
* indicate the number of poles, e.g. KL 17 N/5/
AC 230/400 V/2; **A;
1 – 2.5 mm²/5x (6.3 x 0.8 mm)

**Distribution terminal strip** for plug and screw connections
## Type KL 17 N/*.../K
* indicate the number of poles, e.g. KL 17 N/5/K
AC 230/400 V/2; **A;
1 – 2.5 mm²/5x (6.3 x 0.8 mm)
with clamping spring and screw M4 x 8 DIN 85

| | Poles | G | Type | Part no. | Std. pack | Type | Part no. | Std. pack |
|---|---|---|---|---|---|---|---|---|
| 5 tab connectors 6.3 x 0.8 mm | 1 | 29.8 | | 29.608.0153.0 | 120 | | 29.608.3153.0 | 120 |
| tin-plated steel | 2 | 40.8 | | 29.608.0253.0 | 80 | | 29.608.3253.0 | 80 |
| | 3 | 51.8 | | 29.608.0353.0 | 60 | | 29.608.3353.0 | 60 |
| | 4 | 62.8 | | 29.608.0453.0 | 40 | | 29.608.3453.0 | 40 |
| | 5 | 73.8 | | 29.608.0553.0 | 40 | | 29.608.3553.0 | 40 |
| | 6 | 84.8 | | 29.608.0653.0 | 30 | | 29.608.3653.0 | 30 |
| | 7 | 95.8 | | 29.608.0753.0 | 30 | | 29.608.3753.0 | 30 |
| | 8 | 106.8 | | 29.608.0853.0 | 20 | | 29.608.3853.0 | 20 |
| | 9 | 117.8 | | 29.608.0953.0 | 20 | | 29.608.3953.0 | 20 |
| | 10 | 128.8 | | 29.608.1053.0 | 20 | | 29.608.4053.0 | 20 |
| | 11 | 139.8 | | 29.608.1153.0 | 20 | | 29.608.4153.0 | 20 |
| | 12 | 150.8 | | 29.608.1253.0 | 20 | | 29.608.4253.0 | 20 |
| | 13 | 161.8 | | 29.608.1353.0 | 10 | | 29.608.4353.0 | 10 |
| | 14 | 172.8 | | 29.608.1453.0 | 10 | | 29.608.4453.0 | 10 |
| | 15 | 183.8 | | 29.608.1553.0 | 10 | | 29.608.4553.0 | 10 |
| | 16 | 194.8 | | 29.608.1653.0 | 10 | | 29.608.4653.0 | 10 |
| | 17 | 205.8 | | 29.608.1753.0 | 10 | | 29.608.4753.0 | |
| | 18 | 216.8 | | 29.608.1853.0 | 10 | | 29.608.4853.0 | 10 |
| | 19 | 227.8 | | 29.608.1953.0 | 10 | | 29.608.4953.0 | |
| | 20 | 238.8 | | 29.608.2053.0 | 10 | | 29.608.5053.0 | 10 |
| | 21 | 249.8 | | 29.608.2153.0 | 10 | | 29.608.5153.0 | |
| **Accessories** | 22 | 260.8 | | 29.608.2253.0 | 10 | | 29.608.5253.0 | |
| Insulating spacer: cardboard 2061, | 23 | 271.8 | | 29.608.2353.0 | 10 | | 29.608.5353.0 | |
| 1 to | 24 | 282.8 | | 29.608.2453.0 | 10 | | 29.608.5453.0 | 10 |
| 24pole | | | | | | | | |
| Marking plate: PVC | | | | | | | | |
| 1 to | | | | | | | | |
| 24pole | | | | | | | | |
| | | | | 07.450.0187.0 | | | 07.450.0187.0 | |
| | | | | 07.450.2487.0 | | | 07.450.2487.0 | |
| | | | | | | | | |
| | | | | 07.451.0180.0 | | | 07.451.0180.0 | |
| | | | | 07.451.2480.0 | 100 | | 07.451.2480.0 | 100 |
| | | | | | | | | |

# Mains connectors for appliance wiring 3, 5 and 6pole with screw connection

# KL 58 1/5A

**Material:**

Insulating housing: Polyamide, fiberglass reinforced
Clamping body: tin-plated steel
Clamping screws and clamping spring: zinc-plated steel
Switchable connecting link E-Cu

**Ambient temperature:**
T 160 ... – 5 °C
Continuous maximum temperature: 125 °C

**Insulating part:**

| | |
|---|---|
| Hardness test | at 210 °C |
| Glow-wire test | with 850 °C |
| Tracking test | PTI 400 |

Air and creepage distances accord. to DIN EN 60335-1/VDE 0700 part 1

VDE with Statement of Conformity

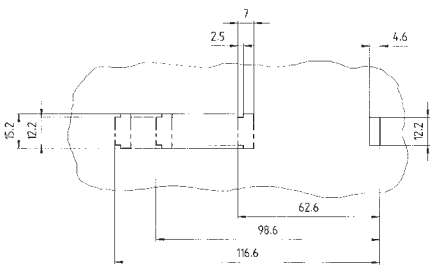


Cut-out 3, 5, 6pole for
*) "latching foot versions"
Metal sheet 1.5 mm thick

| | | | |
|---|---|---|---|
| EN 60998-1/-2-1; EN 61210; (fixed position) | | AC 400 V; 41 A; | 1.5 – 6 mm² |
| UL-ratings | field/factory wiring | 250 V; 40 A; | No. 8 - 14/10 AWG |
| CSA ratings | | 300 V Gr.B/150 V Gr.C; 40 A; | No. 8/10 AWG |
| Approvals | | | |

| Poles | Type | Part no. | Std. pack |
|---|---|---|---|
| 3 | KL 58/3/1 | 29.130.1353.0 | 200 |
| 5 | KL 58/5/1 | 29.130.1553.0 | 100 |
| | 3 links used as a bridge between poles 3 and 4 | | |
| 6 | KL 58/6/1 | 29.130.1653.0 | 100 |
| | 3 links used as a bridge between poles 4 and 5 | | |
| 3 | KL 58/3 R/1* | 29.130.2353.0 | 200 |
| 5 | KL 58/5 R/1* | 29.130.2553.0 | 100 |
| | 3 links used as a bridge between poles 3 and 4 | | |
| 6 | KL 58/6 R/1* | 29.130.2653.0 | 100 |
| | 3 links used as a bridge between poles 4 and 5 | | |

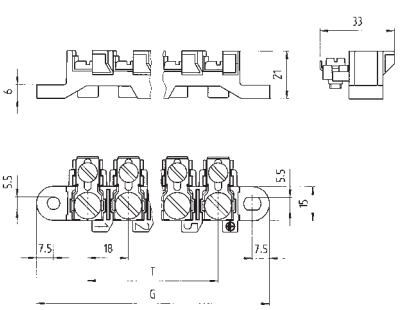


| | T (mm) | G |
|---|---|---|
| 3pole | 36 | 81 |
| 5pole | 72 | 117 |
| 6pole | 90 | 135 |

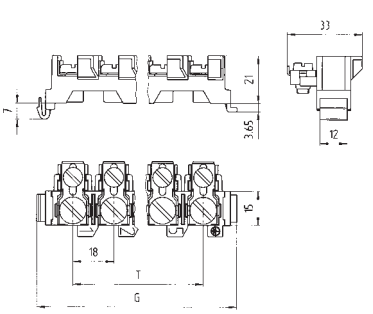


| | T (mm) | G |
|---|---|---|
| 3pole | 36 | 66.5 |
| 5pole | 72 | 102.5 |
| 6pole | 90 | 120.5 |

# Mains connectors for appliance wiring
# 3, 5 and 6pole with 3 tab connectors 6.3 x 0.8 mm per pole

KL 58

**Material:**

Insulating housing: Polyamide, fiberglass reinforced
Clamping body: nickel-plated steel
Clamping screws and clamping spring: zinc-plated steel
Switchable connecting link E-Cu

**Ambient temperature:**
T 160 ... – 5 °C
Continuous maximum temperature: 125 °C

**Insulating part:**

| | |
|---|---|
| Hardness test | at 210 °C |
| Glow-wire test | with 850 °C |
| Tracking test | PTI 400 |

Air and creepage distances accord. to DIN EN 60335-1/VDE 0700 part 1

* 41 A Screw terminal with 6 mm² conductor
** 20 A Tab connector with 6 mm² conductor
VDE with Statement of Conformity

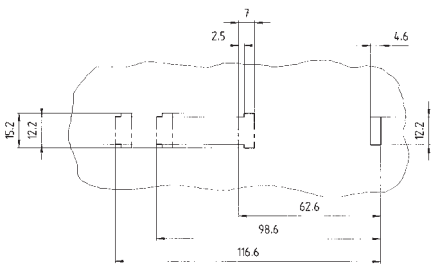


Cut-out 3, 5, 6pole for
*) "latching foot versions"
Metal sheet 1.5 mm thick

(mains side) **10 mm²**

EN 60998-1/-2-1; EN 61210; (fixed position)
UL-ratings field/factory wiring
CSA ratings
Approvals

AC 400 V; */** A; 1.5 – 6 mm²/3x (6.3 x 0.8 mm)
250 V; 40 A; No. 8 - 14/10 AWG
300 V Gr.B/150 V Gr.C; 40 A; No. 8/10 AWG

**Note:**
The air distance of 9.5 mm between the terminals and the mounting base must be guaranteed.

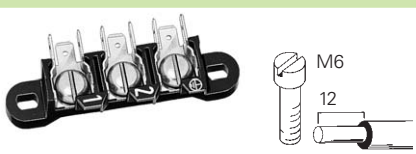


| Poles | Type | Part no. | Std. pack |
|---|---|---|---|
| 3 | KL 58/3 S/1 | 29.131.1353.0 | 200 |

| Poles | Type | Part no. | Std. pack |
|---|---|---|---|
| 5 | KL 58/5 S/1 | 29.131.1553.0 | 100 |
| | 3 links used as a bridge between poles 3 and 4 | | |

| Poles | Type | Part no. | Std. pack |
|---|---|---|---|
| 6 | KL 58 S/6 S/1 | 29.131.1653.0 | 100 |
| | 3 links used as a bridge between poles 4 and 5 | | |

| Poles | Type | Part no. | Std. pack |
|---|---|---|---|
| 3 | KL 58/3 S R/1* | 29.131.2353.0 | 200 |

| Poles | Type | Part no. | Std. pack |
|---|---|---|---|
| 5 | KL 58/5 S R/1* | 29.131.2553.0 | 100 |
| | 3 links used as a bridge between poles 3 and 4 | | |

| Poles | Type | Part no. | Std. pack |
|---|---|---|---|
| 6 | KL 58/6 S R/1* | 29.131.2653.0 | 100 |
| | 3 links used as a bridge between poles 4 and 5 | | |

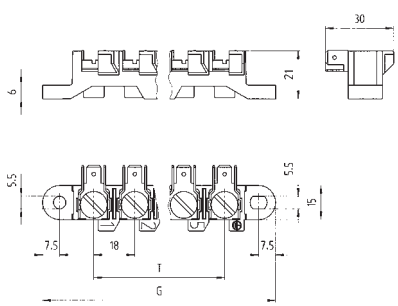


| | T (mm) | G |
|---|---|---|
| 3pole | 36 | 81 |
| 5pole | 72 | 117 |
| 6pole | 90 | 135 |

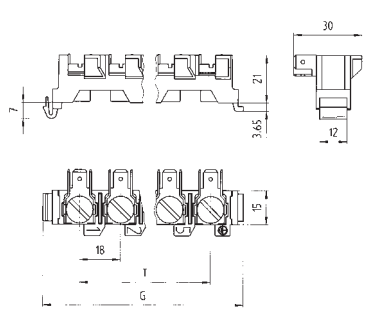


| | T (mm) | G |
|---|---|---|
| 3pole | 36 | 66.5 |
| 5pole | 72 | 102.5 |
| 6pole | 90 | 120.5 |

Special versions with ground connection to the mounting base: upon request

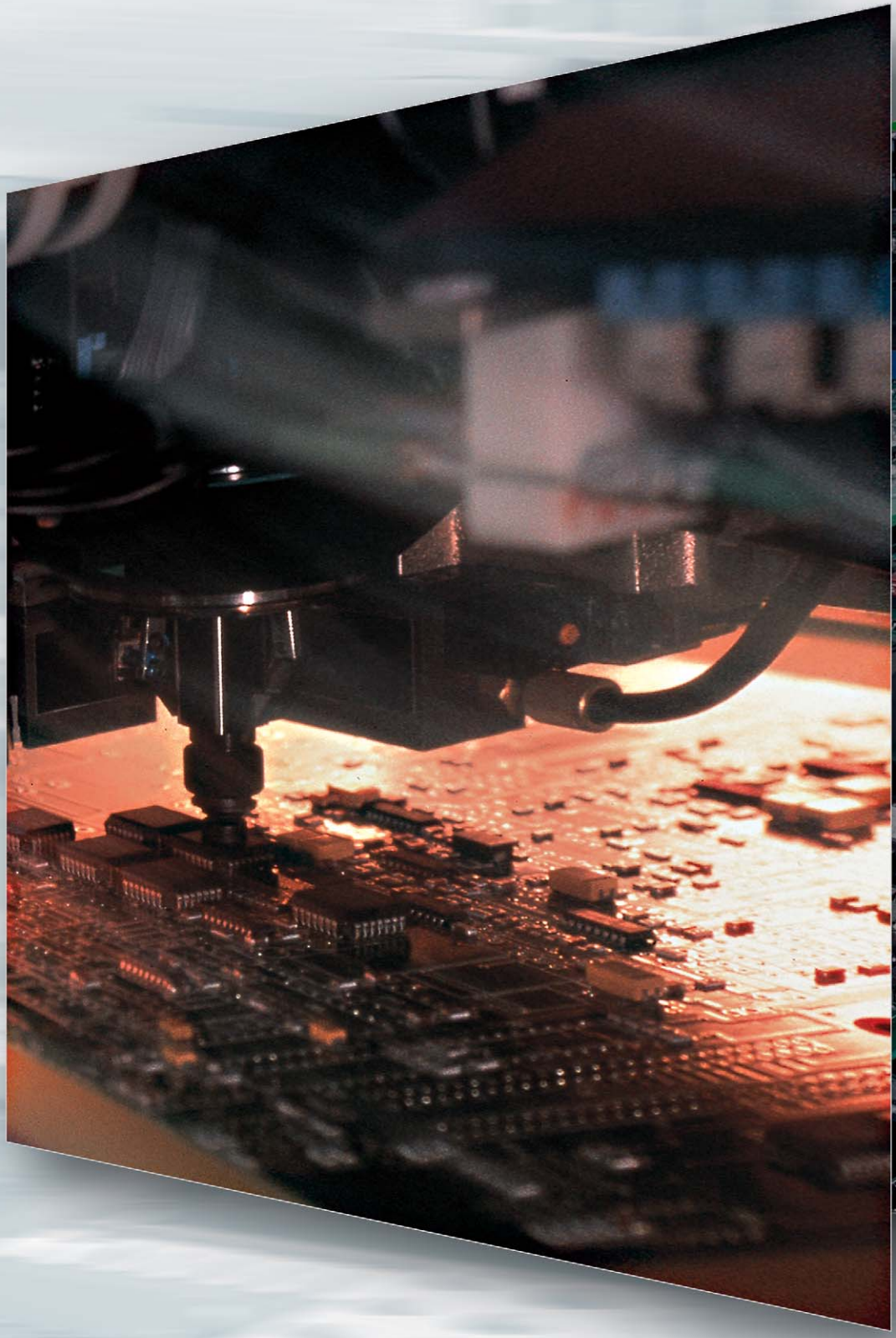

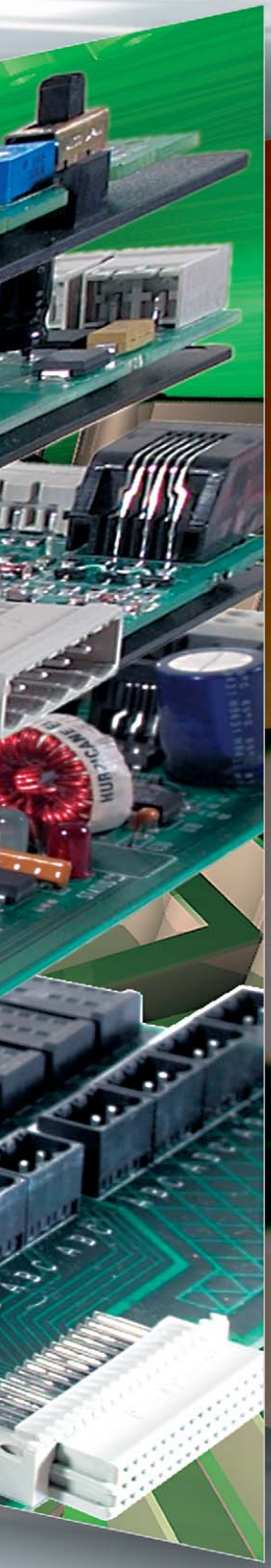

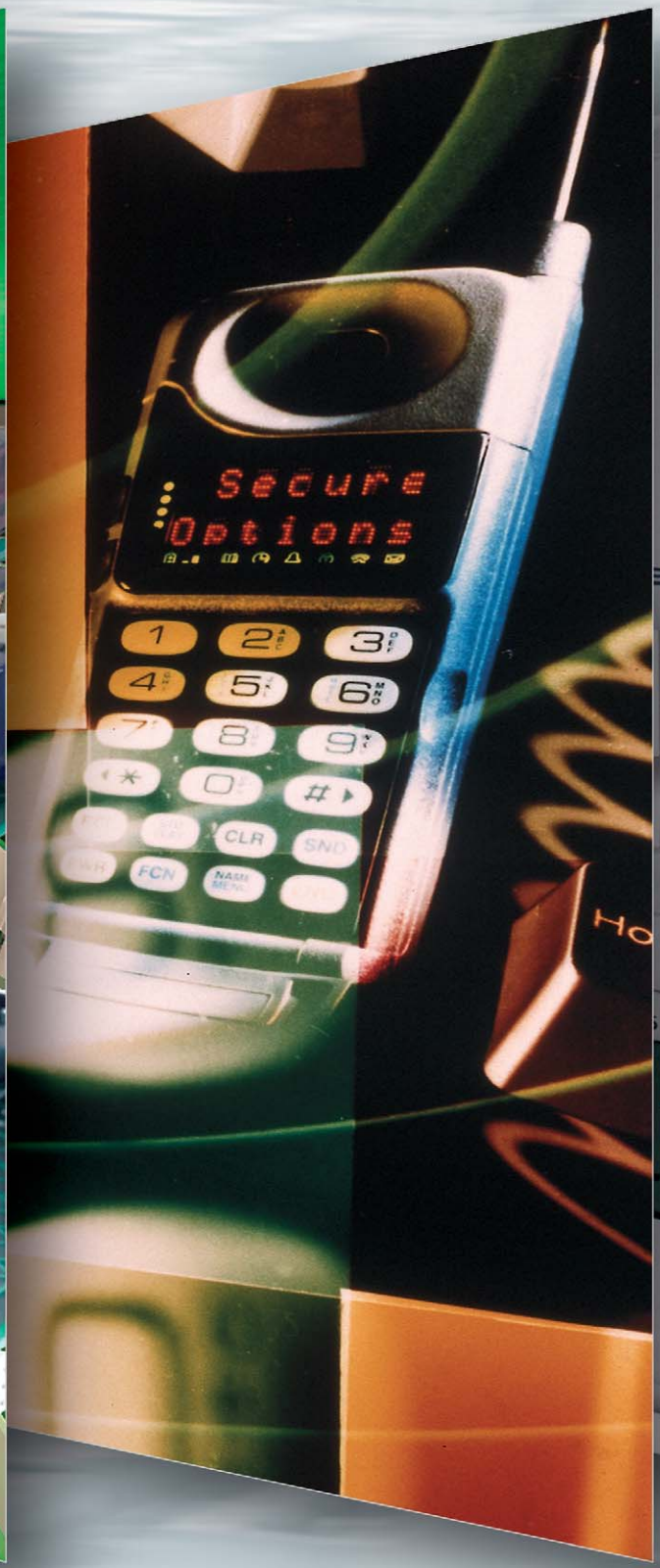

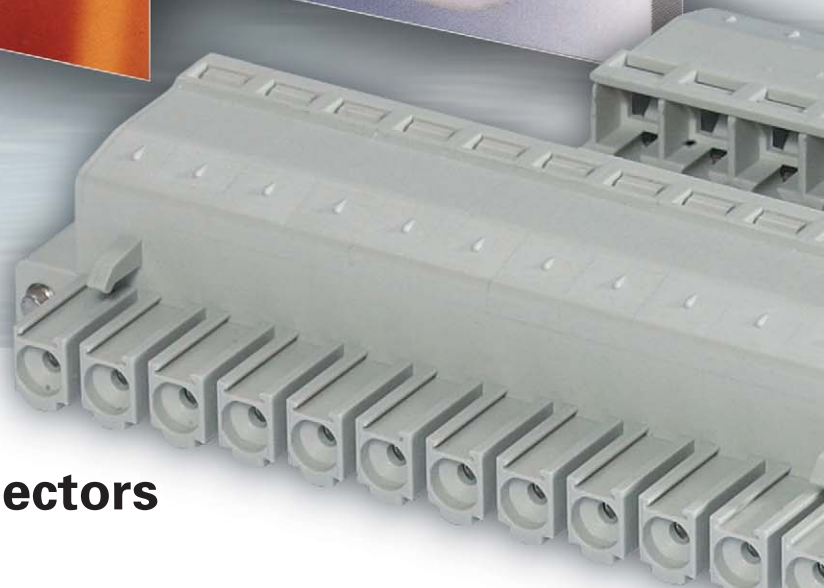

wiecon

# PC Board Connectors

# PC board connectors

wiecon

All Wieland Components which require CE general certification are CE certified, and identified with the CE logo.


**Pluggable PC board connectors with insulated headers, two piece design**

**Pluggable PC board connectors with pin strip headers, two piece design**

**DIN rail terminal blocks with pluggable connectors**

**Pluggable PC board connectors, edge card**

**PC board connectors**

**PC board connectors, 2-tier version**

**PC board connectors, 3-tier version**

**PC board connectors, 4-tier version**

**Special-purpose connectors**

***RAST 5* connectors**
**Feed-through modules for control cabinets**
**Marking tags / marking tag strips**

# CONTENTS

wiecon


| | |
|---|---|
| **Spacings: 3.50/3.81 mm** | |
| • Plug connectors, rising cage clamp | Page 280 |
| • Plug connectors, spring clamp | Page 281 |
| • Insulated headers | Page 284 |
| **Spacings: 5.00/5.08/7.50/7.62 mm** | |
| • Plug connectors, rising cage clamp | Page 286 |
| • Male plug with spring clamp connection (= inverted plug) | Page 295 |
| • Plug connectors, spring clamp | Page 294 |
| • Board to board connectors | Page 295 |
| • Insulated headers | Page 297 |
| • Pluggable TOP connector with strain relief | Page 320 |
| **Spacings: 3.50/5.00 mm** Compression screw clamp | Page 316 |
| **Spacing: 3.50 mm** Spring clamp | Page 324 |
| **Spacing: 5.00 mm** | |
| **Feed-through DIN rail terminal blocks with pluggable connectors** | Page 310 |
| **Spacing: 3.50 mm** Rising cage clamp | Page 328 |
| **Spacing: 5.00 mm** Spring clamp | Page 330 |
| **Spacings: 3.50/3.81 mm** | |
| • Rising cage clamp | Page 336 |
| **Spacings: 5.00/5.08 mm** | |
| • Rising cage clamp | Page 286 |
| • Spring clamp | Page 292 |
| **Spacings: 6.35 mm** | Page 355 |
| **Spacings: 7.50/7.62 mm** | |
| • Rising cage clamp | Page 288 |
| • Spring clamp | Page 294 |
| **Spacings: 10.00/10.16 mm** | |
| • Rising cage clamp | Page 318, 375, 377 |
| **Spacings: 5.00/5.08 mm** | |
| • Rising cage clamp | Page 364 |
| **Spacings: 5.00/5.08 mm** | |
| • Rising cage clamp | Page 370 |
| **Spacing: 5.00 mm** | |
| • Rising cage clamp | Page 373 |
| **Spacing: 5.08 mm** | |
| • Feed through block | Page 378 |
| • PCB plunger disconnect block | Page 378 |
| • Fused feed through terminal block | Page 379 |
| • AS-I connector – IDC Technology | Page 392 |
| | Page 380 |
| | Page 386 |
| | Page 394 |

# Pluggable PC board connectors with insulated headers, two piece design

# wiecon PCB

| Spacing: 5.00/5.08 mm<br>Spacing: 7.50/7.62 mm | Spacing: | Poles | Page 298<br>5.00/5.08<br>8113 S/W<br>8213 S/W | Page 301<br>7.50/7.62<br>8313 S/W<br>8413 S/W | Page 299<br>5.00/5.08<br>8113 S/WOF<br>8213 S/WOF | Page 299<br>5.00/5.08<br>8113 S/WF<br>8213 S/WF | Page 301<br>7.50/7.62<br>8313 S/WF<br>8413 S/WF | Page 297<br>5.00/5.08<br>8113 S/G<br>8213 S/G | Page 300<br>7.50/7.62<br>8313 S/G<br>8413 S/G | Page 297<br>5.00/5.08<br>8113 S/GOF<br>8213 S/GOF | Page 298<br>5.00/5.08<br>8113 S/GF<br>8213 S/GF |
|---|---|---|---|---|---|---|---|---|---|---|---|
| | | 2 – 24 | 2 – 12 | 2 – 24 | 2 – 22 | 2 – 12 | 2 – 24 | 2 – 12 | 2 – 24 | 2 – 22 |
| Page 291<br>**8113 BK** | **5.00** | 2 – 24 | ● 8113 | | ● 8113 | | | ● 8113 | | ● 8113 | |
| Page 286<br>**8113 B**<br>**8213 B** | **5.00**<br>**5.08** | 2 – 24 | ● | | ● | | | ● | | ● | |
| Page 292<br>**8113 BFK**<br>**8213 BFK** | **5.00**<br>**5.08** | 2 – 24 | ● | | ● | ● | | ● | | ● | |
| Page 287<br>**8213 B/S** | **5.08** | 2 – 24 | | | | | | ● 8213 | | ● 8213 | |
| Page 288<br>**8313 B**<br>**8413 B** | **7.50**<br>**7.62** | 2 – 22 | | ● | | | | | ● | | |
| Page 286<br>**8113 B/F**<br>**8213 B/F** | **5.00**<br>**5.08** | 2 – 12 | | | | ● | | | | | ● |
| Page 288<br>**8313 B/F**<br>**8413 B/F** | **7.50**<br>**7.62** | 2 – 24 | | | | | ● | | | | |
| Page 289<br>**8113 B/VL**<br>**8213 B/VL** | **5.00**<br>**5.08** | 2 – 24 | ● | | ● | | | ● | | ● | |
| Page 289<br>**8113 B/VR**<br>**8213 B/VR** | **5.00**<br>**5.08** | 2 – 12 | ● | | ● | | | ● | | ● | |
| Page 290<br>**8413 B/VL** | **7.62** | 2 – 12 | | ● | | | | | ● | | |
| Page 290<br>**8413 B/VR** | **7.62** | 2 – 24 | | ● | | | | | ● | | |
| Page 296<br>**8113 B/TOP**<br>**8213 B/TOP** | **5.00**<br>**5.08** | 2 – 24 | ● | | ● | | | ● | | ● | |
| Page 295<br>**8213 BL/G** | **5.08** | 2 – 24 | ● | | ● | | | ● | | ● | |
| Page 295<br>**8213 BL/W** | **5.08** | 2 – 24 | ● | | ● | | | ● | | ● | |

wiecon

| Page 300 | Page 302 | Page 302 | Page 293 | Page 303 | Page 303 | Page 305 | | Page 305 | | Page 304 | Page 304 |
|---|---|---|---|---|---|---|---|---|---|---|---|
| **7.50/7.62** | **5.00/5.08** | **5.00/5.08** | **5.08** | **5.00/5.08** | **5.00/5.08** | **5.08** | **5.08** | **5.08** | **5.08** | **5.00/5.08** | **5.00/5.08** |
| **8313 S/GF 8413 S/GF** | **8113 S/S 8213 S/S** | **8113 S/S1 8213 S/S1** | **8213 SUFK** | **8113 SE/W 8213 SE/W** | **8113 SE/G 8213 SE/G** | **8213 S/ DFWW** | **8213 S/ DFWWM** | **8213 S/ DFLS** | **8213 S/ DFLSM** | **8113 SEG/W 8213 SEG/W** | **8113 SEG/G 8213 SEG/G** |
| 2 – 12 | 2 – 24 | 2 – 24 | 2 – 12 (24) | 2 – 24 snap together | 2 – 24 snap together | 2 – 24 | 2 – 22 with nut | 2 – 24 | 2 – 22 with nut | 2 – 24 | 2 – 24 |
| | ● 8113 | ● 8113 | | ● 8113 | ● 8113 | | | | | ● 8113 | ● 8113 |
| | ● | ● | ● 8213 | ● | ● | ● | | ● | | ● | ● |
| | ● | ● | ● 8213 | ● | ● | ● | ● | ● 8213 | ● | ● | ● |
| | ● 8213 | ● 8213 | ● | | ● 8213 | ● | | ● | ● 8213 | | ● 8213 |
| | | | | | | | | | | | |
| | | | ● 8213 | | | | ● | | ● | ● | ● |
| ● | | | | | | | | | | | |
| | ● | ● | ● 8213 | ● | ● | ● | ● | ● 8213 | ● 8213 | ● | ● |
| | ● | ● | ● 8213 | ● | ● | ● | ● | ● 8213 | ● 8213 | ● | ● |
| | | | | | | | | | | | |
| | | | | | | | | | | | |
| | ● | ● | ● 8213 | ● | ● | ● | | ● | | ● | ● |
| | ● | ● | ● 8213 | | | | | | | ● 8213 | ● 8213 |
| | | | ● 8213 | | | | | | | | |

IERTES
O 9001
SSICHERUNGSSYSTEM
-Nr. 14 194-02

# PC board connectors with DIN rail terminal blocks pluggable

## wiecon PCB

| | | | Page 310 | Page 310 | Page 311 | Page 312 | Page 312 | Page 308 |
|---|---|---|---|---|---|---|---|---|
| | Spacing: | | 5.00 | 5.00 | 7.50 | 5.00 | 7.50 | 5.00 |
| **Spacing: 5.00/7.50 mm** | | | | | | | | |
| | | | 2 – 24 snap together | 2 – 24 snap together | 2 – 12 snap together | 2 – 24 snap together | 2 – 12 snap together | 2 – 24 snap together |
| Page 286 **8113 B** | **5.00** | 2 – 24 | ● | ● | | ● | | |
| Page 288 **8313 B** | **7.50** | 2 – 12 | | | ● | | ● | |
| Page 289 **8113 B/VL** | **5.00** | 2 – 24 | ● | ● | | ● | | |
| Page 289 **8113 B/VR** | **5.00** | 2 – 24 | ● | ● | | ● | | |
| Page 296 **8113 B/TOP** | **5.00** | 2 – 24 | ● | ● | | ● | | |
| Page 292 **8113 BFK** | **5.00** | 2 – 24 | ● | ● | | ● | ● | ● |

# PC board connectors with insulated headers two-piece design

wiecon

| | Spacing: | | Page 284 | Page 285 | Page 284 | Page 285 |
|---|---|---|---|---|---|---|
| | | | 3.50/3.81 | 3.50/3.81 | 3.50/3.81 | 3.50/3.81 |
| **Spacing: 3.81 mm**<br>**Spacing: 3.50 mm** | | | **8513 S/W**<br>**8813 S/W** | **8513 S/WF**<br>**8813 S/WF** | **8513 S/G**<br>**8813 S/G** | **8513 S/GF**<br>**8813 S/GF** |
| | | | 2 – 20 | 2 – 20 | 2 – 20 | 2 – 20 |
| Page 280<br>**8513 B**<br>**8813 B** | **3.50**<br>**3.81** | 2 – 20 | ● | | ● | |
| Page 280<br>**8513 B/F**<br>**8813 B/F** | **3.50**<br>**3.81** | 2 - 20 | | ● | | ● |
| Page 282<br>**8813 B/VR** | **3.81** | 2 - 20 | ● 8813 | | ● 8813 | |
| Page 282<br>**8813 B/VL** | **3.81** | 2 - 20 | ● 8813 | | ● 8813 | |
| Page 283<br>**8813 B/VRF** | **3.81** | 2 - 20 | | ● 8813 | | ● 8813 |
| Page 283<br>**8813 B/VLF** | **3.81** | 2 - 20 | | ● 8813 | | ● 8813 |
| Page 281<br>**8513 BFK** | **3.50** | 2 – 20 | ● 8513 | | ● 8513 | |

wiecon

IERTES
O 9001
SSICHERUNGSSYSTEM
-Nr. 14 194-02

# Pluggable PC board connectors with insulated headers, two piece design

# wiecon PCB

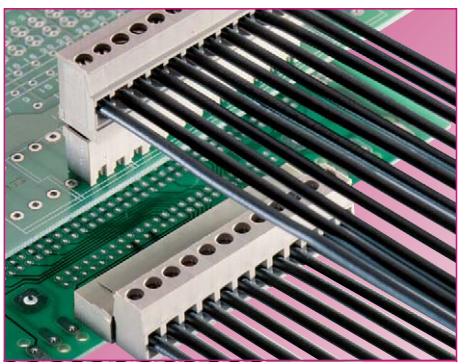

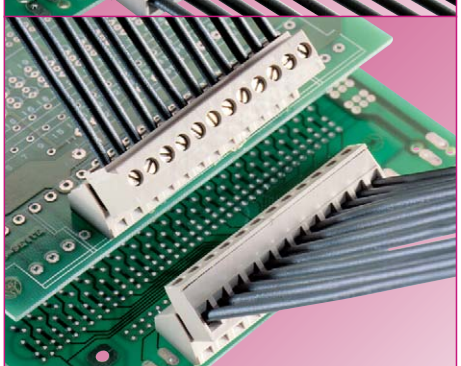

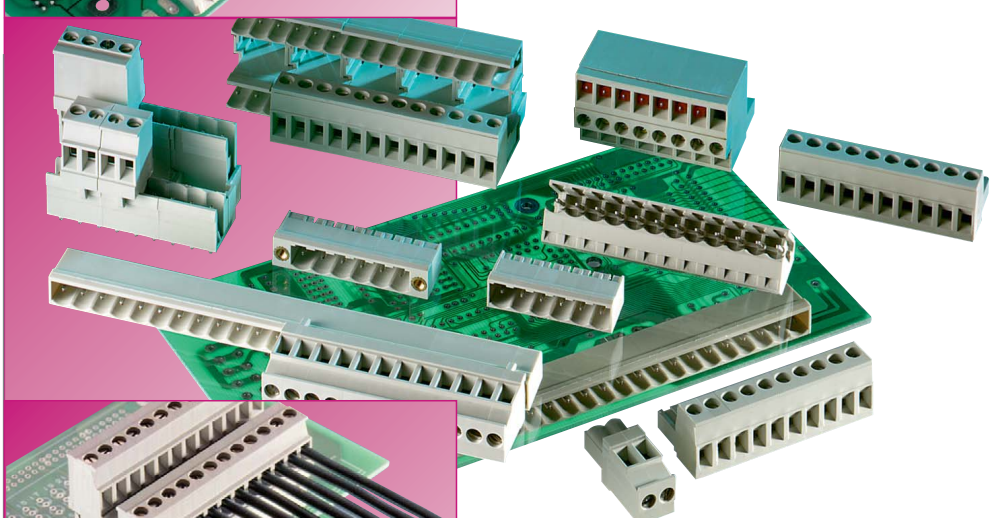

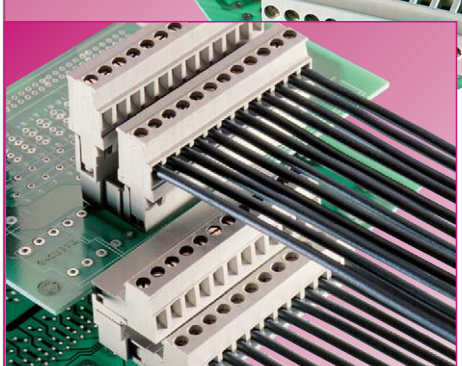

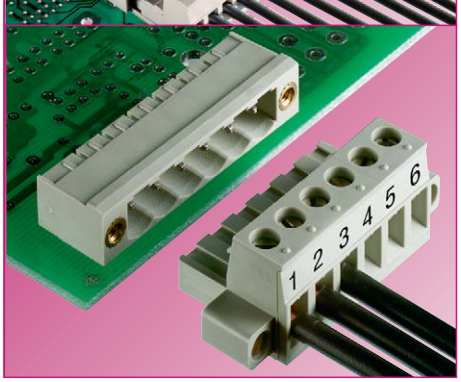


**Pluggable connectors** provide a simple 2-piece mateable connection between an external connector and the printed circuit board.

### System features

- ❒ easy-to-operate, application specific
- ❒ user-friendly pluggability
- ❒ clear, straigthforward connection
- ❒ mating direction and wire insertion for every application
- ❒ quick disconnect
- ❒ multiple pole configurations
- ❒ connection of solid and fine stranded up to 1.5 $mm^2$ and 2.5 $mm^2$ (up to 12 AWG)
- ❒ metric and inch spacing; inch spacing is indicated by a stud over the wire entry guide
- ❒ termination via rising cage clamp (screw connection)
- ❒ termination via TOP connection

### Coding

- ❒ protection against mis-mating via coding pieces inserted into slots in the plug and header
- ❒ coding without pole loss

### Marking

- ❒ inkjet marking directly on the plug and header with smudge-proof ink
- ❒ custom marking possible, consult factory
- ❒ clear, easily legible marking

### Flange version

- ❒ additional screw connection of plug and insulated header preventing unintentional disconnect
- ❒ secure electrical and mechanical connection even under high mechanical stress (e.g. vibration)

### Field of application

- ❒ pluggable PC board connectors simplify termination and service of PC boards
- ❒ with pre-manufactured cable harnesses, units can be adapted to the individual application without problems
- ❒ all pluggable PC board connectors can be coded without loss of pole position
- ❒ the plugs and their matching insulated headers can be interlocked
- ❒ clear markings ensure simple and correct marking

### Variety of types

- ❒ 2 to 24pole
- ❒ mating orientation of the plugs horizontal and vertical to the wire entry
- ❒ plugs mate horizontal and vertical to the printed circuit board
- ❒ insulated headers with vertical and horizontal solder pins
- ❒ insulated headers with pins in 35° angle to the printed circuit board
- ❒ insulated headers with closed sides to prevent mis-mating
- ❒ open-ended insulated headers permit adjacent stacking without pole loss
- ❒ spacings: 3.81/5.00/5.08/ 7.50/7.62/10.00/10.16 mm
- ❒ two-tier headers

### DQS certificates for all products

- ❒ quality standard as per DIN ISO 9001
- ❒ in Development, Production, Assembly
- ❒ continuous verification of the quality standard by means of regular internal and external quality audits
- ❒ compatible with certificates of other countries:
  - BSI Certificate, Great Britain
  - SQS Certificate, Switzerland
  - Aib-Vincotte Certificate, Belgium
  - ÖQS Certificate, Austria

# wiecon

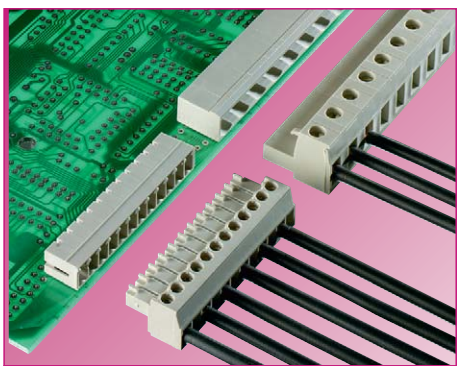

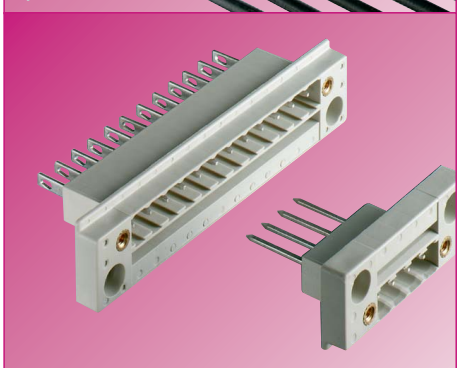

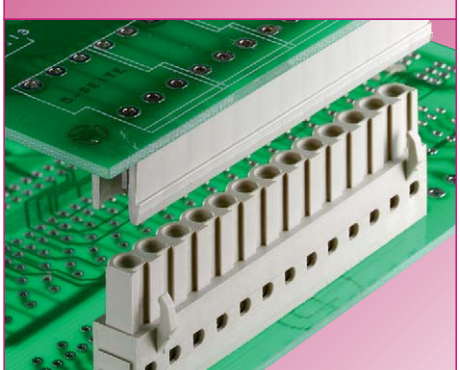

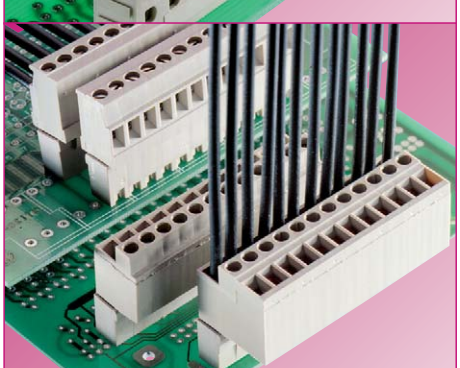

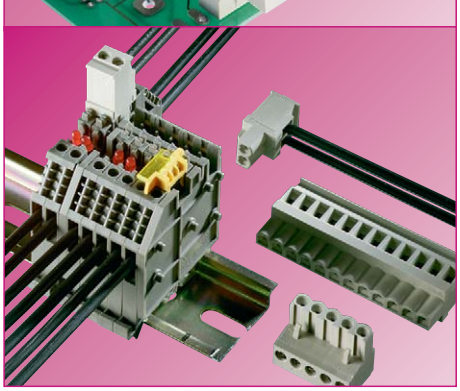

**Types 8513-8813**

- ❒ micro PC board connectors, 2 to 20 pole
- ❒ plug and insulated header horizontal and vertical to the printed circuit board
- ❒ total height: 11 mm, while only 8 mm above the printed circuit board
- ❒ in space-saving 3.5 and 3.81 mm spacing
- ❒ connector cross section: 1.5 $mm^2$
- ❒ codable:
  - headers with coding pins
  - plug connectors with removable coding studs
- ❒ with locking screw flange

**Panel mount feed through pluggables**

- ❒ insulated headers mount directly to panel wall
- ❒ provide pluggable connection at panel
- ❒ header = panel mount feed through
- ❒ optional flange version for vibration secure mating
- ❒ header can be affixed with screws to the housing walls
- ❒ connection inside the housing via wire-wrap or solder connection

**Inverted / board to board connectors**

- ❒ board mounted female header with vertical and horizontal solder pins
- ❒ codable by means of coding pieces inserted in available slots
- ❒ interlocking flange available as accessory
- ❒ inverted plug available

**TOP version**

- ❒ screw connection, wire entry and mate direction all in same plane
- ❒ easy to operate in confined spaces
- ❒ with or without integrated LED

**Application specific terminals**

- ❒ for control systems:
  - DIN rail terminal blocks with pluggable connection at one side
  - plug connectors in 5.00 mm spacing
  - snap on to mounting rail
- ❒ DIN rail terminal blocks with pluggable connection for system 8113
- ❒ vertical plug orientation
- ❒ horizontal plug orientation

**Material**

Metal parts:

- ❒ made of special alloys and/or special surface platings
- ❒ minimum feed through resistance
- ❒ high corrosion resistance
- ❒ secure, consistent clamping function
- ❒ clamping body and clamping screw: made of nickel-plated brass (TOP version: zinc-plated steel, dichromated)
- ❒ plug contacts: tin-plated bronze
- ❒ solder pins: made from high-quality copper alloy

Insulating housings:

- ❒ Polyamide 66/6 for its excellent electrical, chemical and mechanical characteristics (see section ***facts*** & DATA)
- ❒ all housings UL 94 V-0
- ❒ glass-fibre reinforcement for high dimensional stability (not available for multi-tier header and solder parts)
- ❒ colors: gray, similar to RAL 7032; black; for others consult factory

**Abbreviations for plastic materials:**

| | |
|---|---|
| PA 66/6 | = Polyamide 66/6 |
| PC | = Polycarbonate |
| PBT | = Polybutylenterephthalate |

**Note:**
The information regarding cross sectional areas and connection types pertains to conductors without ferrules.

The indicated rated current complies with the maximum load of the PCB connector with connected wire of the indicated rated cross section.

The rated voltage is indicated as per DIN VDE 0110 part 1 (IEC 60 664-1) – isolation coordination for electrical material in low voltage applications – and refers to the delivered state of the PC board connectors.

Before the PC board is fitted with connectors, an appropriate printed circuit board must be selected and dimensioned accordingly (e.g. regarding tracking resistance of the printed circuit board, distances of the leads and solder joints).

Furthermore, the ambient conditions under which the device is to be used (pollution degree) must be considered. The indicated rated voltages will be valid for the complete module only if the pirnted circuit board and its connectors are correctly and carefully matched to each other.

# PC board connectors, pluggable, rising cage connection, spacings: 3.50/3.81 mm

**wiecon** PCB

codable

**1.5 mm²**

Rated cross section:
1.5 mm²

Rated current:
8 A

Connection range:
0.14 – 1.5 mm² solid / fine standed

125 V/2.5 kV/3 – Overvoltage category III
250 V/2.5 kV/2 – Overvoltage category II
*690 V/2.5 kV/1 – Overvoltage category I

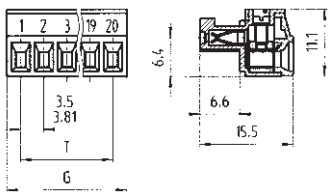


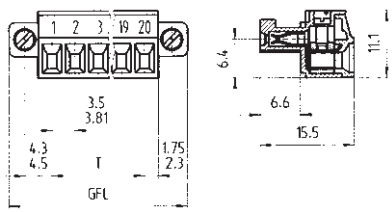

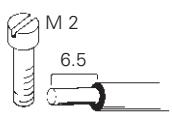

**with screw flange**

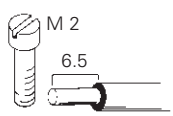


* max. 600 V for ungrounded networks or expected overvoltage ≤ 3 kV for L ≥ 2.00 mm and ≤ 2.5 kV for 2.0 mm > L ≥ 1.5 mm

| | Type 8513 B/..., 8813 B/... | | | Type 8513 B/...F, 8813 B/...F | | |
|---|---|---|---|---|---|---|
| | plug-in 180° to wire entry | | | plug-in 180° to wire entry | | |
| Rated voltages: VDE 0110 | | | | | | |
| UL ratings | No. 30 – 16 AWG | 300 V | 8 A | No. 30 – 16 AWG | 300 V | 8 A |
| CSA ratings | No. 22 – 14 AWG | 300 V | 5 A | No. 22 – 14 AWG | 300 V | 5 A |
| Approvals | | | | | | |

| Std. pack | GFL | G | T | Poles | Part no. unmarked | Part no. marked | Part no. unmarked | Part no. marked |
|---|---|---|---|---|---|---|---|---|
| **Spacing: 3.50 mm** | | | | | | | | |
| 100 | 17.40 | 7.00 | 3.50 | 2 | 25.640.3253.0 | 25.640.0253.0 | 25.641.3253.0 | 25.641.0253.0 |
| 100 | 20.90 | 10.50 | 7.00 | 3 | 25.640.3353.0 | 25.640.0353.0 | 25.641.3353.0 | 25.641.0353.0 |
| 50 | 24.40 | 14.00 | 10.50 | 4 | 25.640.3453.0 | 25.640.0453.0 | 25.641.3453.0 | 25.641.0453.0 |
| 50 | 27.90 | 17.50 | 14.00 | 5 | 25.640.3553.0 | 25.640.0553.0 | 25.641.3553.0 | 25.641.0553.0 |
| 50 | 31.40 | 21.00 | 17.50 | 6 | 25.640.3653.0 | 25.640.0653.0 | 25.641.3653.0 | 25.641.0653.0 |
| 50 | 34.90 | 24.50 | 21.00 | 7 | 25.640.3753.0 | 25.640.0753.0 | 25.641.3753.0 | 25.641.0753.0 |
| 50 | 38.40 | 28.00 | 24.50 | 8 | 25.640.3853.0 | 25.640.0853.0 | 25.641.3853.0 | 25.641.0853.0 |
| 50 | 41.90 | 31.50 | 28.00 | 9 | 25.640.3953.0 | 25.640.0953.0 | 25.641.3953.0 | 25.641.0953.0 |
| 50 | 45.40 | 35.00 | 31.50 | 10 | 25.640.4053.0 | 25.640.1053.0 | 25.641.4053.0 | 25.641.1053.0 |
| 50 | 48.90 | 38.50 | 35.00 | 11 | 25.640.4153.0 | 25.640.1153.0 | 25.641.4153.0 | 25.641.1153.0 |
| 50 | 52.40 | 42.00 | 38.50 | 12 | 25.640.4253.0 | 25.640.1253.0 | 25.641.4253.0 | 25.641.1253.0 |
| 50 | 55.90 | 45.50 | 42.00 | 13 | 25.640.4353.0 | 25.640.1353.0 | 25.641.4353.0 | 25.641.1353.0 |
| 50 | 59.40 | 49.00 | 45.50 | 14 | 25.640.4453.0 | 25.640.1453.0 | 25.641.4453.0 | 25.641.1453.0 |
| 50 | 62.90 | 52.50 | 49.00 | 15 | 25.640.4553.0 | 25.640.1553.0 | 25.641.4553.0 | 25.641.1553.0 |
| 50 | 66.40 | 56.00 | 52.50 | 16 | 25.640.4653.0 | 25.640.1653.0 | 25.641.4653.0 | 25.641.1653.0 |
| | | | 17 to 20pole upon request | | | | | |
| **Spacing: 3.81 mm** | | | | | unmarked | marked | unmarked | marked |
| 100 | 18.01 | 8.41 | 3.81 | 2 | 25.620.3253.0 | 25.620.0253.0 | 25.621.3253.0 | 25.621.0253.0 |
| 100 | 21.82 | 12.22 | 7.62 | 3 | 25.620.3353.0 | 25.620.0353.0 | 25.621.3353.0 | 25.621.0353.0 |
| 50 | 25.63 | 16.03 | 11.43 | 4 | 25.620.3453.0 | 25.620.0453.0 | 25.621.3453.0 | 25.621.0453.0 |
| 50 | 29.44 | 19.84 | 15.24 | 5 | 25.620.3553.0 | 25.620.0553.0 | 25.621.3553.0 | 25.621.0553.0 |
| 50 | 33.25 | 23.65 | 19.05 | 6 | 25.620.3653.0 | 25.620.0653.0 | 25.621.3653.0 | 25.621.0653.0 |
| 50 | 37.06 | 27.46 | 22.86 | 7 | 25.620.3753.0 | 25.620.0753.0 | 25.621.3753.0 | 25.621.0753.0 |
| 50 | 40.87 | 31.27 | 26.67 | 8 | 25.620.3853.0 | 25.620.0853.0 | 25.621.3853.0 | 25.621.0853.0 |
| 50 | 44.68 | 35.08 | 30.48 | 9 | 25.620.3953.0 | 25.620.0953.0 | 25.621.3953.0 | 25.621.0953.0 |
| 50 | 48.49 | 38.89 | 34.29 | 10 | 25.620.4053.0 | 25.620.1053.0 | 25.621.4053.0 | 25.621.1053.0 |
| 50 | 52.30 | 42.70 | 38.10 | 11 | 25.620.4153.0 | 25.620.1153.0 | 25.621.4153.0 | 25.621.1153.0 |
| 50 | 56.11 | 46.51 | 41.91 | 12 | 25.620.4253.0 | 25.620.1253.0 | 25.621.4253.0 | 25.621.1253.0 |
| 50 | 59.92 | 50.32 | 45.72 | 13 | 25.620.4353.0 | 25.620.1353.0 | 25.621.4353.0 | 25.621.1353.0 |
| 50 | 63.73 | 54.13 | 49.53 | 14 | 25.620.4453.0 | 25.620.1453.0 | 25.621.4453.0 | 25.621.1453.0 |
| 50 | 67.54 | 57.94 | 53.34 | 15 | 25.620.4553.0 | 25.620.1553.0 | 25.621.4553.0 | 25.621.1553.0 |
| 50 | 71.35 | 61.75 | 57.15 | 16 | 25.620.4653.0 | 25.620.1653.0 | 25.621.4653.0 | 25.621.1653.0 |
| | | | 17 to 20pole upon request | | | | | |

# PC board connectors, pluggable, spring clamp connection, spacing: 3.50 mm

codable

Rated cross section:
1.5 mm²

Rated current:
8 A

Connection range:
0.14 – 1.5 mm² solid / fine standed

125 V/2.5 kV/3 – Overvoltage category III
250 V/2.5 kV/2 – Overvoltage category II
*690 V/2.5 kV/1 – Overvoltage category I

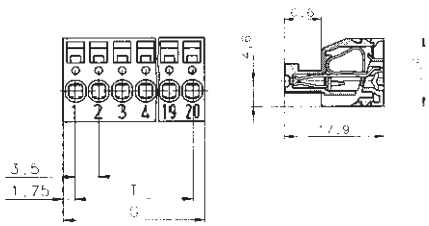


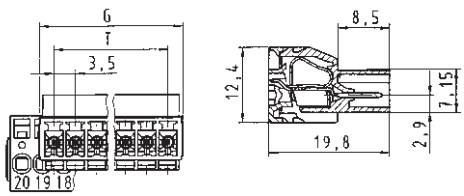


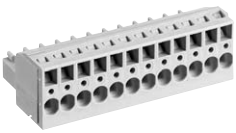

* max. 600 V for ungrounded networks or expected overvoltage ≤ 3 kV for L ≥ 2.00 mm and ≤ 2.5 kV for 2.0 mm > L ≥ 1.5 mm

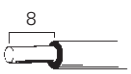


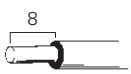


| | Type 8513 BFK | | | Type 8513 SUFK | | |
|---|---|---|---|---|---|---|
| VDE 0110 | | | | | | |
| UL ratings | No. 30 – 16 AWG | 300 V | 8 A | No. 30 – 16 AWG | 300 V | 8 A |
| CSA ratings | No. 22 – 14 AWG | 300 V | 5 A | No. 22 – 14 AWG | 300 V | 5 A |
| Approvals | | | | | | |

| Std. pack | G | T | Poles | Part no. | Part no. | Part no. | Part no. |
|---|---|---|---|---|---|---|---|
| **Spacing: 3.50 mm** | Type 8513 BFK | | | unmarked | marked | | |
| 100 | 6.90 | 3.50 | 2 | 25.630.3253.0 | 25.630.0253.0 | | |
| 100 | 10.40 | 7.00 | 3 | 25.630.3353.0 | 25.630.0353.0 | | |
| 50 | 13.90 | 10.50 | 4 | 25.630.3453.0 | 25.630.0453.0 | | |
| 50 | 17.40 | 14.00 | 5 | 25.630.3553.0 | 25.630.0553.0 | | |
| 50 | 20.90 | 17.50 | 6 | 25.630.3653.0 | 25.630.0653.0 | | |
| 50 | 24.40 | 21.00 | 7 | 25.630.3753.0 | 25.630.0753.0 | | |
| 50 | 27.90 | 24.50 | 8 | 25.630.3853.0 | 25.630.0853.0 | | |
| 50 | 31.40 | 28.00 | 9 | 25.630.3953.0 | 25.630.0953.0 | | |
| 50 | 34.90 | 31.50 | 10 | 25.630.4053.0 | 25.630.1053.0 | | |
| 50 | 38.40 | 35.00 | 11 | 25.630.4153.0 | 25.630.1153.0 | | |
| 50 | 41.90 | 38.50 | 12 | 25.630.4253.0 | 25.630.1253.0 | | |
| 50 | 45.40 | 42.00 | 13 | 25.630.4353.0 | 25.630.1353.0 | | |
| 50 | 48.90 | 45.50 | 14 | 25.630.4453.0 | 25.630.1453.0 | | |
| 50 | 52.40 | 49.00 | 15 | 25.630.4553.0 | 25.630.1553.0 | | |
| 50 | 55.90 | 52.50 | 16 | 25.630.4653.0 | 25.630.1653.0 | | |
| | 17 to 24pole upon request | | | | | | |
| **Spacing: 3.50 mm** | Type 8513 SUFK | | | | | unmarked | marked |
| 100 | 8.40 | 3.50 | 2 | | | 25.642.3253.0 | 25.642.0253.0 |
| 100 | 11.90 | 7.00 | 3 | | | 25.642.3353.0 | 25.642.0353.0 |
| 50 | 15.40 | 10.50 | 4 | | | 25.642.3453.0 | 25.642.0453.0 |
| 50 | 18.90 | 14.00 | 5 | | | 25.642.3553.0 | 25.642.0553.0 |
| 50 | 22.40 | 17.50 | 6 | | | 25.642.3653.0 | 25.642.0653.0 |
| 50 | 25.90 | 21.00 | 7 | | | 25.642.3753.0 | 25.642.0753.0 |
| 50 | 29.40 | 24.50 | 8 | | | 25.642.3853.0 | 25.642.0853.0 |
| 50 | 32.90 | 28.00 | 9 | | | 25.642.3953.0 | 25.642.0953.0 |
| 50 | 36.40 | 31.50 | 10 | | | 25.642.4053.0 | 25.642.1053.0 |
| 50 | 39.90 | 35.00 | 11 | | | 25.642.4153.0 | 25.642.1153.0 |
| 50 | 43.40 | 38.50 | 12 | | | 25.642.4253.0 | 25.642.1253.0 |
| | 46.90 | 42.00 | 13 | | | 25.642.4353.0 | 25.642.1353.0 |
| | 50.40 | 45.50 | 14 | | | 25.642.4453.0 | 25.642.1453.0 |
| | 53.90 | 49.00 | 15 | | | 25.642.4553.0 | 25.642.1553.0 |
| | 57.40 | 52.50 | 16 | | | 25.642.4653.0 | 25.642.1653.0 |
| | 17 to 24pole upon request | | | | | | |
| **Accessories:** | | | | | | | |
| Screwdriver DIN 5264 A 0.4 x 2.5 | 5 | | | 06.502.4300.0 | | | |

# PC board connectors, pluggable, rising cage connection, spacing: 3.81 mm

## wiecon PCB

codable

**1.5 mm²**

Rated cross section:
1.5 mm²

Rated current:
8 A

Connection range:
0.14 – 1.5 mm² solid / fine standed

125 V/2.5 kV/3 – Overvoltage category III
250 V/2.5 kV/2 – Overvoltage category II
*690 V/2.5 kV/1 – Overvoltage category I

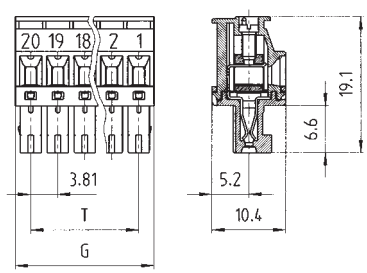


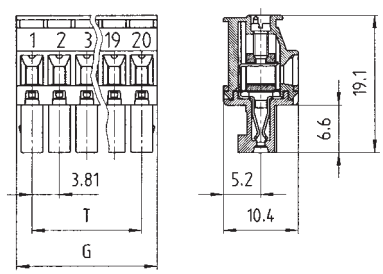


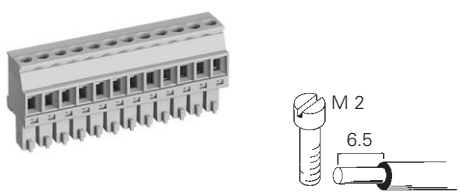


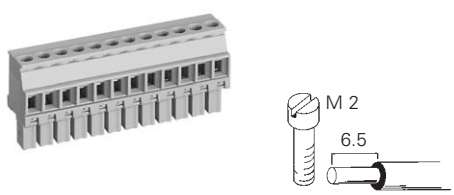


* max. 600 V for ungrounded networks or expected overvoltage ≤ 3 kV for L ≥ 2.00 mm and ≤ 2.5 kV for 2.0 mm > L ≥ 1.5 mm

**Type 8813 B/... VR**
vertical right plug, 90° to wire entry

**Type 8813 B/... VL**
vertical left plug, 90° to wire entry

| | | | | | | | | |
|---|---|---|---|---|---|---|---|---|
| Rated voltages: VDE 0110 | | | | | | | | |
| UL ratings | | | | | No. 30 – 16 AWG | 300 V | 8 A | No. 30 – 16 AWG | 300 V | 8 A |
| CSA ratings | | | | | No. 22 – 14 AWG | 300 V | 5 A | No. 22 – 14 AWG | 300 V | 5 A |
| Approvals | | | | | | | | | | |

| Std. pack | GFL | G | T | Poles | Part no. unmarked | Part no. marked | Part no. unmarked | Part no. marked |
|---|---|---|---|---|---|---|---|---|
| **Spacing: 3.81 mm** | | | | | | | | |
| 100 | 18.01 | 8.41 | 3.81 | 2 | 25.622.3253.0 | 25.622.0253.0 | 25.624.3253.0 | 25.624.0253.0 |
| 100 | 21.82 | 12.22 | 7.62 | 3 | 25.622.3353.0 | 25.622.0353.0 | 25.624.3353.0 | 25.624.0353.0 |
| 50 | 25.63 | 16.03 | 11.43 | 4 | 25.622.3453.0 | 25.622.0453.0 | 25.624.3453.0 | 25.624.0453.0 |
| 50 | 29.44 | 19.84 | 15.24 | 5 | 25.622.3553.0 | 25.622.0553.0 | 25.624.3553.0 | 25.624.0553.0 |
| 50 | 33.25 | 23.65 | 19.05 | 6 | 25.622.3653.0 | 25.622.0653.0 | 25.624.3653.0 | 25.624.0653.0 |
| 50 | 37.06 | 27.46 | 22.86 | 7 | 25.622.3753.0 | 25.622.0753.0 | 25.624.3753.0 | 25.624.0753.0 |
| 50 | 40.87 | 31.27 | 26.67 | 8 | 25.622.3853.0 | 25.622.0853.0 | 25.624.3853.0 | 25.624.0853.0 |
| 50 | 44.68 | 35.08 | 30.48 | 9 | 25.622.3953.0 | 25.622.0953.0 | 25.624.3953.0 | 25.624.0953.0 |
| 50 | 48.49 | 38.89 | 34.29 | 10 | 25.622.4053.0 | 25.622.1053.0 | 25.624.4053.0 | 25.624.1053.0 |
| 50 | 52.30 | 42.70 | 38.10 | 11 | 25.622.4153.0 | 25.622.1153.0 | 25.624.4153.0 | 25.624.1153.0 |
| 50 | 56.11 | 46.51 | 41.91 | 12 | 25.622.4253.0 | 25.622.1253.0 | 25.624.4253.0 | 25.624.1253.0 |
| 50 | 59.92 | 50.32 | 45.72 | 13 | 25.622.4353.0 | 25.622.1353.0 | 25.624.4353.0 | 25.624.1353.0 |
| 50 | 63.73 | 54.13 | 49.53 | 14 | 25.622.4453.0 | 25.622.1453.0 | 25.624.4453.0 | 25.624.1453.0 |
| 50 | 67.54 | 57.94 | 53.34 | 15 | 25.622.4553.0 | 25.622.1553.0 | 25.624.4553.0 | 25.624.1553.0 |
| 50 | 71.35 | 61.75 | 57.15 | 16 | 25.622.4653.0 | 25.622.1653.0 | 25.624.4653.0 | 25.624.1653.0 |
| 17 to 20pole upon request | | | | | | | | |

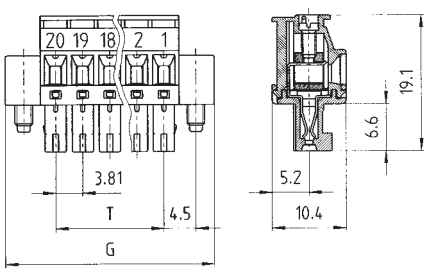


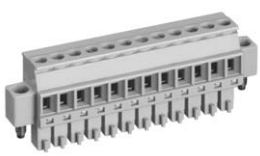

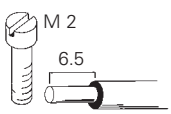


**with screw flange**

## Type 8813 B/... VR F

vertical right plug, 90° to wire entry

| | | |
|---|---|---|
| No. 30 – 16 AWG | 300 V | 8 A |
| No. 22 – 14 AWG | 300 V | 5 A |

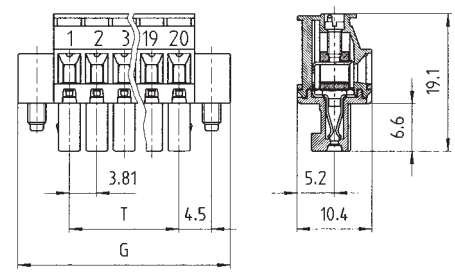

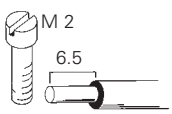


**with screw flange**

## Type 8813 B/... VL F

vertical left plug, 90° to wire entry

| | | |
|---|---|---|
| No. 30 – 16 AWG | 300 V | 8 A |
| No. 22 – 14 AWG | 300 V | 5 A |

| Part no. unmarked | Part no. marked | Part no. unmarked | Part no. marked | |
|---|---|---|---|---|
| 25.623.3253.0 | 25.623.0253.0 | 25.625.3253.0 | 25.625.0253.0 | |
| 25.623.3353.0 | 25.623.0353.0 | 25.625.3353.0 | 25.625.0353.0 | |
| 25.623.3453.0 | 25.623.0453.0 | 25.625.3453.0 | 25.625.0453.0 | |
| 25.623.3553.0 | 25.623.0553.0 | 25.625.3553.0 | 25.625.0553.0 | |
| 25.623.3653.0 | 25.623.0653.0 | 25.625.3653.0 | 25.625.0653.0 | |
| 25.623.3753.0 | 25.623.0753.0 | 25.625.3753.0 | 25.625.0753.0 | |
| 25.623.3853.0 | 25.623.0853.0 | 25.625.3853.0 | 25.625.0853.0 | |
| 25.623.3953.0 | 25.623.0953.0 | 25.625.3953.0 | 25.625.0953.0 | |
| 25.623.4053.0 | 25.623.1053.0 | 25.625.4053.0 | 25.625.1053.0 | |
| 25.623.4153.0 | 25.623.1153.0 | 25.625.4153.0 | 25.625.1153.0 | |
| 25.623.4253.0 | 25.623.1253.0 | 25.625.4253.0 | 25.625.1253.0 | |
| 25.623.4353.0 | 25.623.1353.0 | 25.625.4353.0 | 25.625.1353.0 | |
| 25.623.4453.0 | 25.623.1453.0 | 25.625.4453.0 | 25.625.1453.0 | |
| 25.623.4553.0 | 25.623.1553.0 | 25.625.4553.0 | 25.625.1553.0 | |
| 25.623.4653.0 | 25.640.1653.0 | 25.625.4653.0 | 25.625.1653.0 | |

# Insulated headers for PC boards
# Spacings: 3.50/3.81 mm

**wiecon** PCB

codable

**1.5 mm²**

Rated current:
8 A

125 V/2.5 kV/3 – Overvoltage category III
250 V/2.5 kV/2 – Overvoltage category II
*690 V/2.5 kV/1 – Overvoltage category I

Approvals for type 8513 available soon

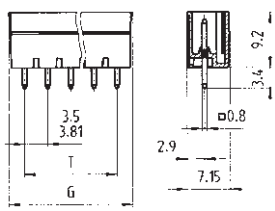


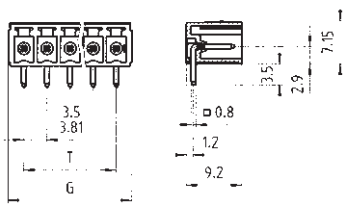


* max. 600 V for ungrounded networks or expected overvoltage ≤ 3 kV for L ≥ 2.00 mm and ≤ 2.5 kV for 2.0 mm > L ≥ 1.5 mm

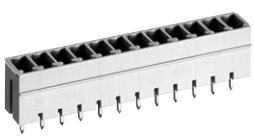

Solder pin 0.8 x 0.8 mm
Bore hole Ø 1.2 mm

**Type 8513 S/... G, 8813 S/... G**
vertical mount

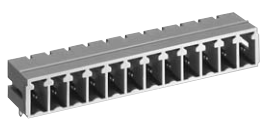

Solder pin 0.8 x 0.8 mm
Bore hole Ø 1.2 mm

**Type 8513 S/... W, 8813 S/... W**
horizontal mount

| | | | | | | | | | | | |
|---|---|---|---|---|---|---|---|---|---|---|---|
| Rated voltages: VDE 0110 | | | | | | | | | | | |
| UL ratings | | | | | | 300 V | 8 A | | | 300 V | 8 A |
| CSA ratings | | | | | | 300 V | 5 A | | | 300 V | 5 A |
| Approvals | | | | | | | | | | | |
| Std. pack | GFL | G | T | Poles | Part no. | | Part no. | | Part no. | | Part no. |
| **Spacing: 3.50 mm** | | | | | unmarked | | | | unmarked | | |
| 100 | 17.40 | 8.40 | 3.50 | 2 | 25.646.0253.0 | | | | 25.647.0253.0 | | |
| 100 | 20.90 | 11.90 | 7.00 | 3 | 25.646.0353.0 | | | | 25.647.0353.0 | | |
| 50 | 24.40 | 15.40 | 10.50 | 4 | 25.646.0453.0 | | | | 25.647.0453.0 | | |
| 50 | 27.90 | 18.90 | 14.00 | 5 | 25.646.0553.0 | | | | 25.647.0553.0 | | |
| 50 | 31.40 | 22.40 | 17.50 | 6 | 25.646.0653.0 | | | | 25.647.0653.0 | | |
| 50 | 34.90 | 25.90 | 21.00 | 7 | 25.646.0753.0 | | | | 25.647.0753.0 | | |
| 50 | 38.40 | 29.40 | 24.50 | 8 | 25.646.0853.0 | | | | 25.647.0853.0 | | |
| 50 | 41.90 | 32.90 | 28.00 | 9 | 25.646.0953.0 | | | | 25.647.0953.0 | | |
| 50 | 45.40 | 36.40 | 31.50 | 10 | 25.646.1053.0 | | | | 25.647.1053.0 | | |
| 50 | 48.90 | 39.90 | 35.00 | 11 | 25.646.1153.0 | | | | 25.647.1153.0 | | |
| 50 | 52.40 | 43.40 | 38.50 | 12 | 25.646.1253.0 | | | | 25.647.1253.0 | | |
| 50 | 55.90 | 46.90 | 42.00 | 13 | 25.646.1353.0 | | | | 25.647.1353.0 | | |
| 50 | 59.40 | 50.40 | 45.50 | 14 | 25.646.1453.0 | | | | 25.647.1453.0 | | |
| 50 | 62.90 | 53.90 | 49.00 | 15 | 25.646.1553.0 | | | | 25.647.1553.0 | | |
| 50 | 66.40 | 57.40 | 52.50 | 16 | 25.646.1653.0 | | | | 25.647.1653.0 | | |
| | | | 17 to 20pole upon request | | | | | | | | |
| **Spacing: 3.81 mm** | | | | | unmarked | | | | unmarked | | |
| 100 | 18.01 | 9.01 | 3.81 | 2 | 25.626.0253.0 | | | | 25.627.0253.0 | | |
| 100 | 21.82 | 12.82 | 7.62 | 3 | 25.626.0353.0 | | | | 25.627.0353.0 | | |
| 50 | 25.63 | 16.63 | 11.43 | 4 | 25.626.0453.0 | | | | 25.627.0453.0 | | |
| 50 | 29.44 | 20.44 | 15.24 | 5 | 25.626.0553.0 | | | | 25.627.0553.0 | | |
| 50 | 33.25 | 24.25 | 19.05 | 6 | 25.626.0653.0 | | | | 25.627.0653.0 | | |
| 50 | 37.06 | 28.06 | 22.86 | 7 | 25.626.0753.0 | | | | 25.627.0753.0 | | |
| 50 | 40.87 | 31.87 | 26.67 | 8 | 25.626.0853.0 | | | | 25.627.0853.0 | | |
| 50 | 44.68 | 35.68 | 30.48 | 9 | 25.626.0953.0 | | | | 25.627.0953.0 | | |
| 50 | 48.49 | 39.49 | 34.29 | 10 | 25.626.1053.0 | | | | 25.627.1053.0 | | |
| 50 | 52.30 | 43.30 | 38.10 | 11 | 25.626.1153.0 | | | | 25.627.1153.0 | | |
| 50 | 56.11 | 47.11 | 41.91 | 12 | 25.626.1253.0 | | | | 25.627.1253.0 | | |
| 50 | 59.92 | 50.92 | 45.72 | 13 | 25.626.1353.0 | | | | 25.627.1353.0 | | |
| 50 | 63.73 | 54.73 | 49.53 | 14 | 25.626.1453.0 | | | | 25.627.1453.0 | | |
| 50 | 67.54 | 58.54 | 53.34 | 15 | 25.626.1553.0 | | | | 25.627.1553.0 | | |
| 50 | 71.35 | 62.35 | 57.15 | 16 | 25.626.1653.0 | | | | 25.627.1653.0 | | |
| | | | 17 to 20pole upon request | | | | | | | | |
| **Accessories:** | | | | | | | | | | | |
| Coding piece (strip) | 100 | | | | 05.561.0053.0 | | | | 05.561.0053.0 | | |
| Coding studs are molded into plugs; remove with knife at desired coding location | | | | | | | | | | | |

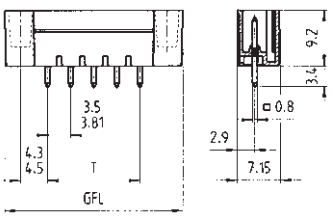


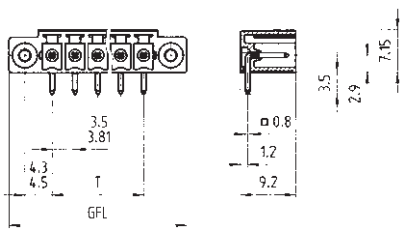

**with screw flange**

Solder pin 0.8 x 0.8 mm
Bore hole Ø 1.2 mm

**with screw flange**

Solder pin 0.8 x 0.8 mm
Bore hole Ø 1.2 mm

## Type 8513 S/... GF, 8813 S/... GF

vertical mount

300 V 8 A
300 V 5 A

## Type 8513 S/... WF, 8813 S/... WF

horizontal mount

300 V 8 A
300 V 5 A

| Part no. | Part no. | Part no. | Part no. | |
|---|---|---|---|---|
| unmarked | | unmarked | | |
| 25.646.3253.0<br>25.646.3353.0<br>25.646.3453.0 | | 25.647.3253.0<br>25.647.3353.0<br>25.647.3453.0 | | |
| 25.646.3553.0<br>25.646.3653.0<br>25.646.3753.0 | | 25.647.3553.0<br>25.647.3653.0<br>25.647.3753.0 | | |
| 25.646.3853.0<br>25.646.3953.0<br>25.646.4053.0 | | 25.647.3853.0<br>25.647.3953.0<br>25.647.4053.0 | | |
| 25.646.4153.0<br>25.646.4253.0<br>25.646.4353.0 | | 25.647.4153.0<br>25.647.4253.0<br>25.647.4353.0 | | |
| 25.646.4453.0<br>25.646.4553.0<br>25.646.4653.0 | | 25.647.4453.0<br>25.647.4553.0<br>25.647.4653.0 | | |
| unmarked | | unmarked | | |
| 25.626.3253.0<br>25.626.3353.0<br>25.626.3453.0 | | 25.627.3253.0<br>25.627.3353.0<br>25.627.3453.0 | | |
| 25.626.3553.0<br>25.626.3653.0<br>25.626.3753.0 | | 25.627.3553.0<br>25.627.3653.0<br>25.627.3753.0 | | |
| 25.626.3853.0<br>25.626.3953.0<br>25.626.4053.0 | | 25.627.3853.0<br>25.627.3953.0<br>25.627.4053.0 | | |
| 25.626.4153.0<br>25.626.4253.0<br>25.626.4353.0 | | 25.627.4153.0<br>25.627.4253.0<br>25.627.4353.0 | | |
| 25.626.4453.0<br>25.626.4553.0<br>25.626.4653.0 | | 25.627.4453.0<br>25.627.4553.0<br>25.627.4653.0 | | |
| | | | | |
| 05.561.0053.0 | | 05.561.0053.0 | | |
| | | | | |

# PC board connectors, pluggable, rising cage connection, spacings: 5.00/5.08 mm

**wiecon** PCB

codable

**2.5 mm²**

Rated cross section:
2.5 mm²

Rated current:
12 A

Connection range:
0.14 – 2.5 mm² solid / fine standed

250 V/4 kV/3 – Overvoltage category III
400 V/4 kV/2 – Overvoltage category II
1000 V/4 kV/1 – Overvoltage category I

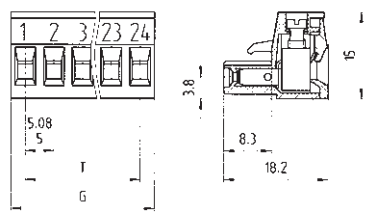


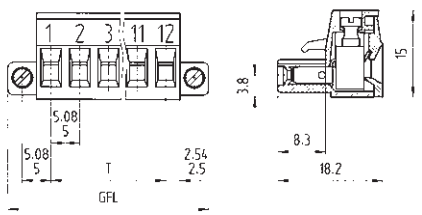

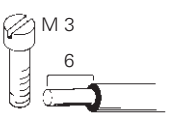


**Type 8113 B/..., 8213 B/...**
plug-in 180° to wire entry

**with screw flange**

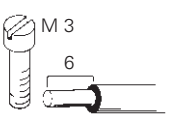


**Type 8113 B/... F, 8213 B/... F**
plug-in 180° to wire entry

| | | | | |
|---|---|---|---|---|
| Rated voltages: VDE 0110 | | | | |
| UL ratings | No. 22 – 12 AWG | 300 V | 15 A | No. 22 – 12 AWG 300 V 15 A |
| CSA ratings | No. 22 – 12 AWG | 300 V | 15 A | No. 22 – 12 AWG 300 V 15 A |
| Approvals | | | | |

| Std. pack | GFL | G | T | Poles | Part no. unmarked | Part no. marked | Part no. unmarked | Part no. marked |
|---|---|---|---|---|---|---|---|---|
| **Spacing: 5.00 mm** | | | Type 8113 | | unmarked | marked | unmarked | marked |
| 100 | 20 | 10 | 5 | 2 | 25.320.3253.0 | 25.320.0253.0 | 25.322.3253.0 | 25.322.0253.0 |
| 100 | 25 | 15 | 10 | 3 | 25.320.3353.0 | 25.320.0353.0 | 25.322.3353.0 | 25.322.0353.0 |
| 50 | 30 | 20 | 15 | 4 | 25.320.3453.0 | 25.320.0453.0 | 25.322.3453.0 | 25.322.0453.0 |
| 50 | 35 | 25 | 20 | 5 | 25.320.3553.0 | 25.320.0553.0 | 25.322.3553.0 | 25.322.0553.0 |
| 50 | 40 | 30 | 25 | 6 | 25.320.3653.0 | 25.320.0653.0 | 25.322.3653.0 | 25.322.0653.0 |
| 50 | 45 | 35 | 30 | 7 | 25.320.3753.0 | 25.320.0753.0 | 25.322.3753.0 | 25.322.0753.0 |
| 50 | 50 | 40 | 35 | 8 | 25.320.3853.0 | 25.320.0853.0 | 25.322.3853.0 | 25.322.0853.0 |
| 50 | 55 | 45 | 40 | 9 | 25.320.3953.0 | 25.320.0953.0 | 25.322.3953.0 | 25.322.0953.0 |
| 50 | 60 | 50 | 45 | 10 | 25.320.4053.0 | 25.320.1053.0 | 25.322.4053.0 | 25.322.1053.0 |
| 50 | 65 | 55 | 50 | 11 | 25.320.4153.0 | 25.320.1153.0 | 25.322.4153.0 | 25.322.1153.0 |
| 50 | 70 | 60 | 55 | 12 | 25.320.4253.0 | 25.320.1253.0 | 25.322.4253.0 | 25.322.1253.0 |
| 50 | 75 | 65 | 60 | 13 | 25.320.4353.0 | 25.320.1353.0 | 25.322.4353.0 | 25.322.1353.0 |
| 50 | 80 | 70 | 65 | 14 | 25.320.4453.0 | 25.320.1453.0 | 25.322.4453.0 | 25.322.1453.0 |
| 50 | 85 | 75 | 70 | 15 | 25.320.4553.0 | 25.320.1553.0 | 25.322.4553.0 | 25.322.1553.0 |
| 50 | 90 | 80 | 75 | 16 | 25.320.4653.0 | 25.320.1653.0 | 25.322.4653.0 | 25.322.1653.0 |
| | | | | | 17 to 24pole upon request | | 17 to 22pole upon request | |
| **Spacing: 5.08 mm** | | | Type 8213 | | unmarked | marked | unmarked | marked |
| 100 | 20.32 | 10.16 | 5.08 | 2 | 25.340.3253.0 | 25.340.0253.0 | 25.323.3253.0 | 25.323.0253.0 |
| 100 | 25.40 | 15.24 | 10.16 | 3 | 25.340.3353.0 | 25.340.0353.0 | 25.323.3353.0 | 25.323.0353.0 |
| 50 | 30.48 | 20.32 | 15.24 | 4 | 25.340.3453.0 | 25.340.0453.0 | 25.323.3453.0 | 25.323.0453.0 |
| 50 | 35.56 | 25.40 | 20.32 | 5 | 25.340.3553.0 | 25.340.0553.0 | 25.323.3553.0 | 25.323.0553.0 |
| 50 | 40.64 | 30.48 | 25.40 | 6 | 25.340.3653.0 | 25.340.0653.0 | 25.323.3653.0 | 25.323.0653.0 |
| 50 | 45.72 | 35.56 | 30.48 | 7 | 25.340.3753.0 | 25.340.0753.0 | 25.323.3753.0 | 25.323.0753.0 |
| 50 | 50.80 | 40.64 | 35.56 | 8 | 25.340.3853.0 | 25.340.0853.0 | 25.323.3853.0 | 25.323.0853.0 |
| 50 | 55.88 | 45.72 | 40.64 | 9 | 25.340.3953.0 | 25.340.0953.0 | 25.323.3953.0 | 25.323.0953.0 |
| 50 | 60.96 | 50.80 | 45.72 | 10 | 25.340.4053.0 | 25.340.1053.0 | 25.323.4053.0 | 25.323.1053.0 |
| 50 | 66.04 | 55.88 | 50.80 | 11 | 25.340.4153.0 | 25.340.1153.0 | 25.323.4153.0 | 25.323.1153.0 |
| 50 | 71.12 | 60.96 | 55.88 | 12 | 25.340.4253.0 | 25.340.1253.0 | 25.323.4253.0 | 25.323.1253.0 |
| 50 | 76.20 | 66.04 | 60.96 | 13 | 25.340.4353.0 | 25.340.1353.0 | 25.323.4353.0 | 25.323.1353.0 |
| 50 | 81.28 | 71.12 | 66.04 | 14 | 25.340.4453.0 | 25.340.1453.0 | 25.323.4453.0 | 25.323.1453.0 |
| 50 | 86.36 | 76.20 | 71.12 | 15 | 25.340.4553.0 | 25.340.1553.0 | 25.323.4553.0 | 25.323.1553.0 |
| 50 | 91.44 | 81.28 | 76.20 | 16 | 25.340.4653.0 | 25.340.1653.0 | 25.323.4653.0 | 25.323.1653.0 |
| | | | | | 17 to 22pole upon request | | 17 to 22pole upon request | |
| **Accessories:** | | | | | | | | |
| Coding piece (strip) | 100 | | | | 05.561.9153.0 | | 05.561.9153.0 | |

Rated cross section:
2.5 mm²

Rated current:
12 A
related to 20 °C ambient temperature,
rated cross section and max. pole configuration

Connection range:
0.5 – 2.5 mm² solid / fine standed

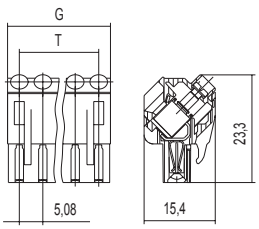


250 V/4 kV/3 – Overvoltage category III
400 V/4 kV/2 – Overvoltage category II
400 V/4 kV/1 – Overvoltage category I

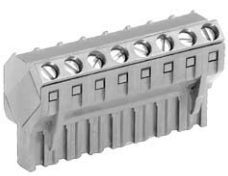

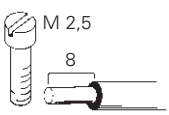


**Type 8213 B/...S**

Rated voltages: VDE 0110/1.89

| | | | |
|---|---|---|---|
| UL ratings | No. 28 – 12 AWG | 300 V | 10 A |
| CSA ratings | No. 28 – 12 AWG | 300 V | 10 A |
| Approvals | | | |

| Std. pack | GFL | G | T | Poles | Part no. | Part no. | |
|---|---|---|---|---|---|---|---|
| **Spacing: 5.08 mm** | | | | | unmarked | | |
| 100 | | 10.16 | 5.08 | 2 | 27.341.3253.0 | | |
| 100 | | 15.24 | 10.16 | 3 | 27.341.3353.0 | | |
| 50 | | 20.32 | 15.24 | 4 | 27.341.3453.0 | | |
| 50 | | 25.40 | 20.32 | 5 | 27.341.3553.0 | | |
| 50 | | 30.48 | 25.40 | 6 | 27.341.3653.0 | | |
| 50 | | 35.56 | 30.48 | 7 | 27.341.3753.0 | | |
| 50 | | 40.64 | 35.56 | 8 | 27.341.3853.0 | | |
| 50 | | 45.72 | 40.64 | 9 | 27.341.3953.0 | | |
| 50 | | 50.80 | 45.72 | 10 | 27.341.4053.0 | | |
| 50 | | 55.88 | 50.80 | 11 | 27.341.4153.0 | | |
| 50 | | 60.96 | 55.88 | 12 | 27.341.4253.0 | | |
| 50 | | 66.04 | 60.96 | 13 | 27.341.4353.0 | | |
| 50 | | 71.12 | 66.04 | 14 | 27.341.4453.0 | | |
| 50 | | 76.20 | 71.12 | 15 | 27.341.4553.0 | | |
| 50 | | 81.28 | 76.20 | 16 | 27.341.4653.0 | | |
| | | | | | 17 to 24pole upon request | | |
| | | | | | | | |
| | | | | | | | |
| | | | | | | | |
| | | | | | | | |
| | | | | | | | |
| | | | | | | | |
| | | | | | | | |
| | | | | | Coding available upon request | | |

# PC board connectors, pluggable, rising cage connection, spacings: 7.50/7.62 mm

**wiecon** PCB

codable

**2.5 mm²**

Rated cross section:
2.5 mm²

Rated current:
12 A

Connection range:
0.14 – 2.5 mm² solid / fine standed

400 V/4 kV/3 – Overvoltage category III
690 V/4 kV/2 – Overvoltage category II
1000 V/4 kV/1 – Overvoltage category I

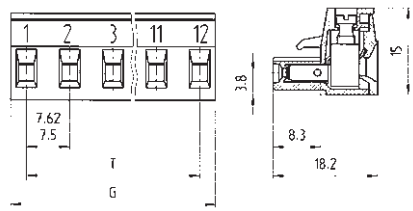


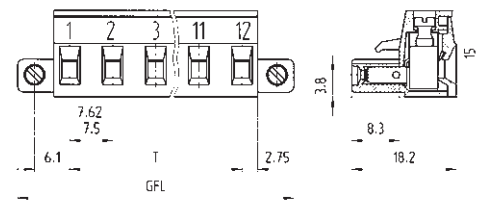


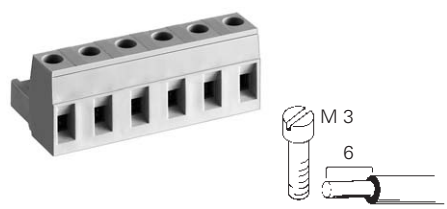


**Type 8313 B/..., 8413 B/...**
plug-in 180° to wire entry

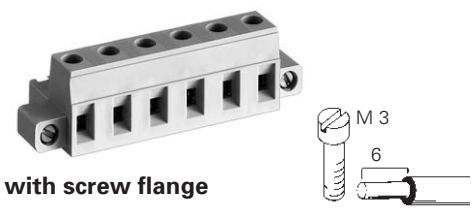


**with screw flange**

**Type 8313 B/... F, 8413 B/... F**
plug-in 180° to wire entry

| | | | | |
|---|---|---|---|---|
| Rated voltages: VDE 0110 | | | | |
| UL ratings | No. 22 – 12 AWG | 300 V | 15 A | No. 22 – 12 AWG 300 V 15 A |
| CSA ratings | No. 22 – 12 AWG | 300 V | 15 A | No. 22 – 12 AWG 300 V 15 A |
| Approvals | | | | |

| Std. pack | GFL | G | T | Poles | Part no. unmarked | Part no. marked | Part no. unmarked | Part no. marked |
|---|---|---|---|---|---|---|---|---|
| **Spacing: 7.50 mm** | | | Type 8313 | | unmarked | marked | unmarked | marked |
| 100 | 25.54 | 13.00 | 7.50 | 2 | 25.360.3253.0 | 25.360.0253.0 | 25.324.2253.0 | 25.324.0253.0 |
| 100 | 33.04 | 20.50 | 15.00 | 3 | 25.360.3353.0 | 25.360.0353.0 | 25.324.2353.0 | 25.324.0353.0 |
| 50 | 40.54 | 28.00 | 22.50 | 4 | 25.360.3453.0 | 25.360.0453.0 | 25.324.2453.0 | 25.324.0453.0 |
| 50 | 48.04 | 35.50 | 30.00 | 5 | 25.360.3553.0 | 25.360.0553.0 | 25.324.2553.0 | 25.324.0553.0 |
| 50 | 55.54 | 43.00 | 37.50 | 6 | 25.360.3653.0 | 25.360.0653.0 | 25.324.2653.0 | 25.324.0653.0 |
| 50 | 63.04 | 50.50 | 45.00 | 7 | 25.360.3753.0 | 25.360.0753.0 | 25.324.2753.0 | 25.324.0753.0 |
| 50 | 70.54 | 58.00 | 52.50 | 8 | 25.360.3853.0 | 25.360.0853.0 | 25.324.2853.0 | 25.324.0853.0 |
| 50 | 78.04 | 65.50 | 60.00 | 9 | 25.360.3953.0 | 25.360.0953.0 | 25.324.2953.0 | 25.324.0953.0 |
| 50 | 85.54 | 73.00 | 67.50 | 10 | 25.360.4053.0 | 25.360.1053.0 | 25.324.3053.0 | 25.324.1053.0 |
| 50 | 93.04 | 80.50 | 75.00 | 11 | 25.360.4153.0 | 25.360.1153.0 | 25.324.3153.0 | 25.324.1153.0 |
| 50 | 100.54 | 88.00 | 82.50 | 12 | 25.360.4253.0 | 25.360.1253.0 | 25.324.3253.0 | 25.324.1253.0 |
| **Spacing: 7.62 mm** | | | Type 8413 | | unmarked | marked | unmarked | marked |
| 100 | 25.66 | 13.12 | 7.62 | 2 | 25.380.3253.0 | 25.380.0253.0 | 25.324.6253.0 | |
| 100 | 33.28 | 20.74 | 15.24 | 3 | 25.380.3353.0 | 25.380.0353.0 | 25.324.6353.0 | |
| 50 | 40.90 | 28.36 | 22.86 | 4 | 25.380.3453.0 | 25.380.0453.0 | 25.324.6453.0 | |
| 50 | 48.52 | 35.98 | 30.48 | 5 | 25.380.3553.0 | 25.380.0553.0 | 25.324.6553.0 | |
| 50 | 56.14 | 43.60 | 38.10 | 6 | 25.380.3653.0 | 25.380.0653.0 | 25.324.6653.0 | |
| 50 | 63.76 | 51.22 | 45.72 | 7 | 25.380.3753.0 | 25.380.0753.0 | 25.324.6753.0 | |
| 50 | 71.38 | 58.84 | 53.34 | 8 | 25.380.3853.0 | 25.380.0853.0 | 25.324.6853.0 | |
| 50 | 79.00 | 66.46 | 60.96 | 9 | 25.380.3953.0 | 25.380.0953.0 | 25.324.6953.0 | |
| 50 | 86.62 | 74.08 | 68.58 | 10 | 25.380.4053.0 | 25.380.1053.0 | 25.324.7053.0 | |
| 50 | 94.24 | 81.70 | 76.20 | 11 | 25.380.4153.0 | 25.380.1153.0 | 25.324.7153.0 | |
| 50 | 101.86 | 89.32 | 83.82 | 12 | 25.380.4253.0 | 25.380.1253.0 | 25.324.7253.0 | |
| **Accessories:** | | | | | | | | |
| Coding piece (strip) | 100 | | | | 05.561.9153.0 | | 05.561.9153.0 | |

# PC board connectors, pluggable, rising cage connection, spacings 5.00/5.08 mm

codable

**2.5 mm²**

Rated cross section:
2.5 mm²

Rated current:
12 A

Connection range:
0.14 – 2.5 mm² solid / fine standed

250 V/4 kV/3 – Overvoltage category III
400 V/4 kV/2 – Overvoltage category II
1000 V/4 kV/1 – Overvoltage category I

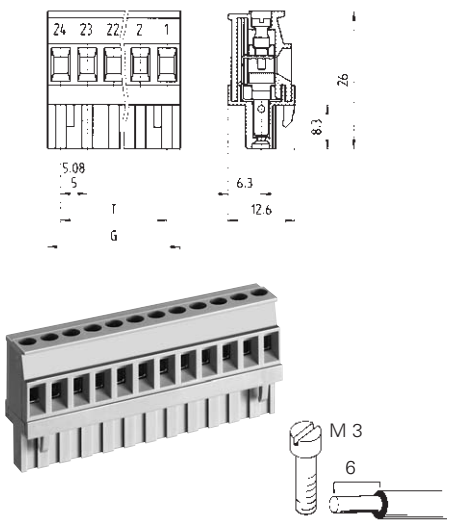


**Type 8113 B/... VR, 8213 B/... VR**
vertical right plug, 90° to wire entry

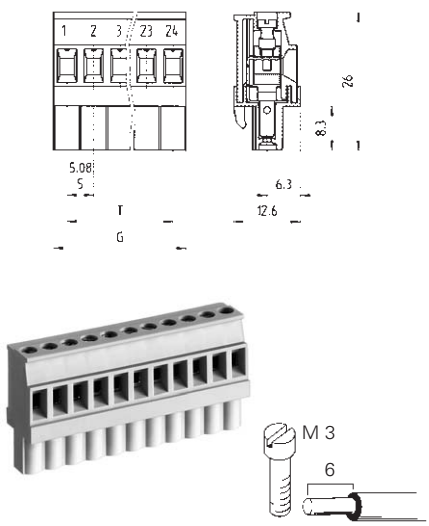


**Type 8113 B/... VL, 8213 B/... VL**
vertical left plug, 90° to wire entry

| | | | |
|---|---|---|---|
| Rated voltages: VDE 0110 | | | |
| UL ratings | No. 22 – 12 AWG | 300 V | 15 A |
| CSA ratings | No. 22 – 12 AWG | 300 V | 15 A |
| Approvals | | | |

| | | | | | | | |
|---|---|---|---|---|---|---|---|
| Std. pack | G | T | Poles | Part no. | Part no. | Part no. | Part no. |
| **Spacing: 5.00 mm** | | Type 8113 | | unmarked | marked | unmarked | marked |
| 100 | 10 | 5 | 2 | 25.325.3253.0 | 25.325.0253.0 | 25.326.3253.0 | 25.326.0253.0 |
| 100 | 15 | 10 | 3 | 25.325.3353.0 | 25.325.0353.0 | 25.326.3353.0 | 25.326.0353.0 |
| 50 | 20 | 15 | 4 | 25.325.3453.0 | 25.325.0453.0 | 25.326.3453.0 | 25.326.0453.0 |
| 50 | 25 | 20 | 5 | 25.325.3553.0 | 25.325.0553.0 | 25.326.3553.0 | 25.326.0553.0 |
| 50 | 30 | 25 | 6 | 25.325.3653.0 | 25.325.0653.0 | 25.326.3653.0 | 25.326.0653.0 |
| 50 | 35 | 30 | 7 | 25.325.3753.0 | 25.325.0753.0 | 25.326.3753.0 | 25.326.0753.0 |
| 50 | 40 | 35 | 8 | 25.325.3853.0 | 25.325.0853.0 | 25.326.3853.0 | 25.326.0853.0 |
| 50 | 45 | 40 | 9 | 25.325.3953.0 | 25.325.0953.0 | 25.326.3953.0 | 25.326.0953.0 |
| 50 | 50 | 45 | 10 | 25.325.4053.0 | 25.325.1053.0 | 25.326.4053.0 | 25.326.1053.0 |
| 50 | 55 | 50 | 11 | 25.325.4153.0 | 25.325.1153.0 | 25.326.4153.0 | 25.326.1153.0 |
| 50 | 60 | 55 | 12 | 25.325.4253.0 | 25.325.1253.0 | 25.326.4253.0 | 25.326.1253.0 |
| 50 | 65 | 60 | 13 | 25.325.4353.0 | 25.325.1353.0 | 25.326.4353.0 | 25.326.1353.0 |
| 50 | 70 | 65 | 14 | 25.325.4453.0 | 25.325.1453.0 | 25.326.4453.0 | 25.326.1453.0 |
| 50 | 75 | 70 | 15 | 25.325.4553.0 | 25.325.1553.0 | 25.326.4553.0 | 25.326.1553.0 |
| 50 | 80 | 75 | 16 | 25.325.4653.0 | 25.325.1653.0 | 25.326.4653.0 | 25.326.1653.0 |
| | 17 to 24pole upon request | | | | | | |
| **Spacing: 5.08 mm** | | Type 8213 | | unmarked | marked | unmarked | marked |
| 100 | 10.16 | 5.08 | 2 | 25.345.3253.0 | 25.345.0253.0 | 25.346.3253.0 | 25.346.0253.0 |
| 100 | 15.24 | 10.16 | 3 | 25.345.3353.0 | 25.345.0353.0 | 25.346.3353.0 | 25.346.0353.0 |
| 50 | 20.32 | 15.24 | 4 | 25.345.3453.0 | 25.345.0453.0 | 25.346.3453.0 | 25.346.0453.0 |
| 50 | 25.40 | 20.32 | 5 | 25.345.3553.0 | 25.345.0553.0 | 25.346.3553.0 | 25.346.0553.0 |
| 50 | 30.48 | 25.40 | 6 | 25.345.3653.0 | 25.345.0653.0 | 25.346.3653.0 | 25.346.0653.0 |
| 50 | 35.56 | 30.48 | 7 | 25.345.3753.0 | 25.345.0753.0 | 25.346.3753.0 | 25.346.0753.0 |
| 50 | 40.64 | 35.56 | 8 | 25.345.3853.0 | 25.345.0853.0 | 25.346.3853.0 | 25.346.0853.0 |
| 50 | 45.72 | 40.64 | 9 | 25.345.3953.0 | 25.345.0953.0 | 25.346.3953.0 | 25.346.0953.0 |
| 50 | 50.80 | 45.72 | 10 | 25.345.4053.0 | 25.345.1053.0 | 25.346.4053.0 | 25.346.1053.0 |
| 50 | 55.88 | 50.80 | 11 | 25.345.4153.0 | 25.345.1153.0 | 25.346.4153.0 | 25.346.1153.0 |
| 50 | 60.96 | 55.88 | 12 | 25.345.4253.0 | 25.345.1253.0 | 25.346.4253.0 | 25.346.1253.0 |
| 50 | 66.04 | 60.96 | 13 | 25.345.4353.0 | 25.345.1353.0 | 25.346.4353.0 | 25.346.1353.0 |
| 50 | 71.12 | 66.04 | 14 | 25.345.4453.0 | 25.345.1453.0 | 25.346.4453.0 | 25.346.1453.0 |
| 50 | 76.20 | 71.12 | 15 | 25.345.4553.0 | 25.345.1553.0 | 25.346.4553.0 | 25.346.1553.0 |
| 50 | 81.28 | 76.20 | 16 | 25.345.4653.0 | 25.345.1653.0 | 25.346.4653.0 | 25.346.1653.0 |
| | 17 to 24pole upon request | | | | | | |
| **Accessories:** | | | | | | | |
| Coding piece (strip) | 100 | | | 05.561.9153.0 | | 05.561.9153.0 | |

# PC board connectors, pluggable, rising cage connection, spacing: 7.62 mm

**wiecon** PCB

codable

Rated cross section:
2.5 mm²

Rated current:
12 A

Connection range:
0.14 – 2.5 mm² solid / fine standed

400 V/4 kV/3 – Overvoltage category III
690 V/4 kV/2 – Overvoltage category II
1000 V/4 kV/1 – Overvoltage category I

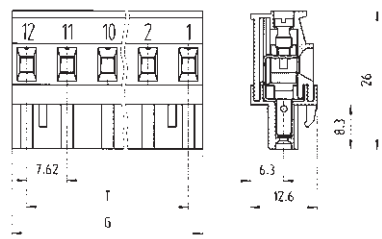


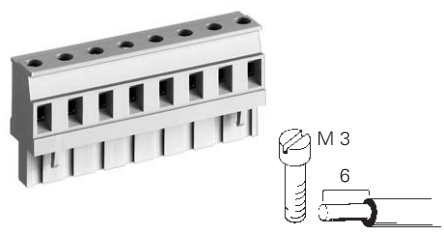


**Type 8413 B/... VR**
vertical right plug, 90° to wire entry

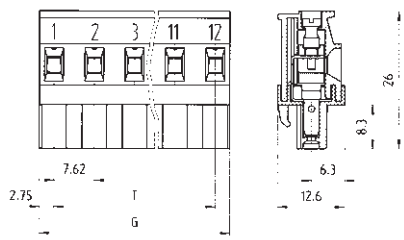


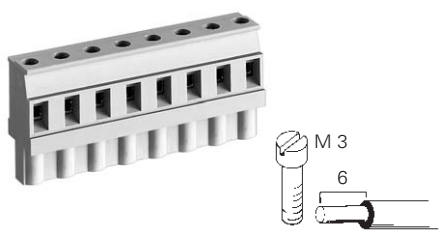


**Type 8413 B/... VL**
vertical left plug, 90° to wire entry

| | | | | | |
|---|---|---|---|---|---|
| Rated voltages: VDE 0110 | | | | | |
| UL ratings | No. 22 – 12 AWG | 300 V | 15 A | No. 22 – 12 AWG | 300 V | 15 A |
| CSA ratings | No. 22 – 12 AWG | 300 V | 15 A | No. 22 – 14 AWG | 300 V | 15 A |
| Approvals | | | | | |

| Std. pack | G | T | Poles | Part no. | Part no. | Part no. | Part no. |
|---|---|---|---|---|---|---|---|
| **Spacing: 7.62 mm** | | Type 8413 | | unmarked | marked | unmarked | marked |
| a 100 | 13.12 | 7.62 | 2 | 25.385.2253.0 | 25.385.0253.0 | 25.386.2253.0 | 25.386.0253.0 |
| 100 | 20.74 | 15.24 | 3 | 25.385.2353.0 | 25.385.0353.0 | 25.386.2353.0 | 25.386.0353.0 |
| 50 | 28.36 | 22.86 | 4 | 25.385.2453.0 | 25.385.0453.0 | 25.386.2453.0 | 25.386.0453.0 |
| 50 | 35.98 | 30.48 | 5 | 25.385.2553.0 | 25.385.0553.0 | 25.386.2553.0 | 25.386.0553.0 |
| 50 | 43.60 | 38.10 | 6 | 25.385.2653.0 | 25.385.0653.0 | 25.386.2653.0 | 25.386.0653.0 |
| 50 | 51.22 | 45.72 | 7 | 25.385.2753.0 | 25.385.0753.0 | 25.386.2753.0 | 25.386.0753.0 |
| 50 | 58.84 | 53.34 | 8 | 25.385.2853.0 | 25.385.0853.0 | 25.386.2853.0 | 25.386.0853.0 |
| 50 | 66.46 | 60.96 | 9 | 25.385.2953.0 | 25.385.0953.0 | 25.386.2953.0 | 25.386.0953.0 |
| 50 | 74.08 | 68.58 | 10 | 25.385.3053.0 | 25.385.1053.0 | 25.386.3053.0 | 25.386.1053.0 |
| 50 | 81.70 | 76.20 | 11 | 25.385.3153.0 | 25.385.1153.0 | 25.386.3153.0 | 25.386.1153.0 |
| 50 | 89.32 | 83.82 | 12 | 25.385.3253.0 | 25.385.1253.0 | 25.386.3253.0 | 25.386.1253.0 |
| **Accessories:** | | | | | | | |
| Coding piece (strip) | 100 | | | 05.561.9153.0 | | 05.561.9153.0 | |

# Crimp connection

wiecon

Rated cross section:
1.0 or 2.5 mm²

Rated current:
10 A with a 1.0 mm² wire and 0.5 – 1.0 mm² contacts

12 A with a 2.5 mm² wire and 1.5 – 2.5 mm² contacts

Contacts for connection range:
0.5 – 1.0 mm² fine stranded
(insulation diameter 1.4 – 2.3 mm)

Connection range:
0.5 – 1.0 mm² fine stranded
(insulation diameter 1.4 – 3.1 mm)

250 V/4 kV/3 – Overvoltage category III
400 V/4 kV/2 – Overvoltage category II
1000 V/4 kV/1 – Overvoltage category I

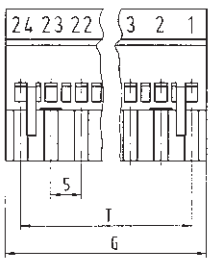


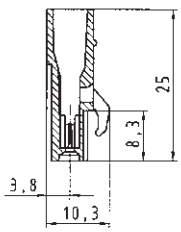


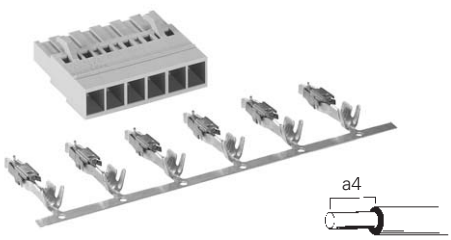


**Type 8113 BK**

Rated voltages: VDE 0110
UL ratings — No. 22 – 12 AWG — 300 V — 15 A
CSA ratings
Approvals — pending

| Std. pack | G | T | Poles | Part no. unmarked | Part no. marked | Part no. | Part no. |
|---|---|---|---|---|---|---|---|
| **Spacing: 5.00 mm** | | | | | | | |
| 100 | 10 | 5 | 2 | 01.060.3253.0 | 01.060.0253.0 | | |
| 100 | 15 | 10 | 3 | 01.060.3353.0 | 01.060.0353.0 | | |
| 50 | 20 | 15 | 4 | 01.060.3453.0 | 01.060.0453.0 | | |
| 50 | 25 | 20 | 5 | 01.060.3553.0 | 01.060.0553.0 | | |
| 50 | 30 | 25 | 6 | 01.060.3653.0 | 01.060.0653.0 | | |
| 50 | 35 | 30 | 7 | 01.060.3753.0 | 01.060.0753.0 | | |
| 50 | 40 | 35 | 8 | 01.060.3853.0 | 01.060.0853.0 | | |
| 50 | 45 | 40 | 9 | 01.060.3953.0 | 01.060.0953.0 | | |
| 50 | 50 | 45 | 10 | 01.060.4053.0 | 01.060.1053.0 | | |
| 50 | 55 | 50 | 11 | 01.060.4153.0 | 01.060.1153.0 | | |
| 50 | 60 | 55 | 12 | 01.060.4253.0 | 01.060.1253.0 | | |
| 50 | 65 | 60 | 13 | 01.060.4353.0 | 01.060.1353.0 | | |
| 50 | 70 | 65 | 14 | 01.060.4453.0 | 01.060.1453.0 | | |
| 50 | 75 | 70 | 15 | 01.060.4553.0 | 01.060.1553.0 | | |
| 50 | 80 | 75 | 16 | 01.060.4653.0 | 01.060.1653.0 | | |
| | | | | 17 to 24pole upon request | | | |
| **Accessories:** | | | | | | | |
| **Crimp contacts** | | | | | | | |
| Single contacts | 500 | 0.5 – 1.0 mm² | 20-18 AWG | 02.125.1629.0 | | | |
| Single contacts | 500 | 1.5 – 2.5 mm² | 16-14 AWG | 02.125.1729.0 | | | |
| Reel contacts | 4000 | 0.5 – 1.0 mm² | 20-18 AWG | 02.125.1600.0 | | | |
| Reel contacts | 3500 | 1.5 – 2.5 mm² | 16-14 AWG | 02.125.1700.0 | | | |
| **Crimping tool:** | | | | | | | |
| Crimping tool | | | | 95.101.0800.0 | | | |
| Crimp dies | | | | 05.502.2500.0 | | | |

# PC board connectors, spring clamp connection spacings 5.00/5.08 mm

**wiecon** PCB

Rated cross section*:
2.5 mm²

Rated current:
12 A

Connection range:
0.14 – 2.5 mm² solid / fine standed

250 V/4 kV/3 – Overvoltage category III
400 V/4 kV/2 – Overvoltage category II
1000 V/4 kV/1 – Overvoltage category I

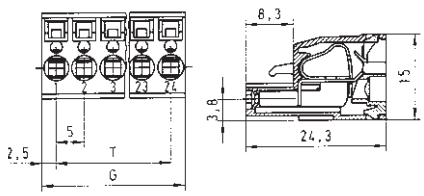


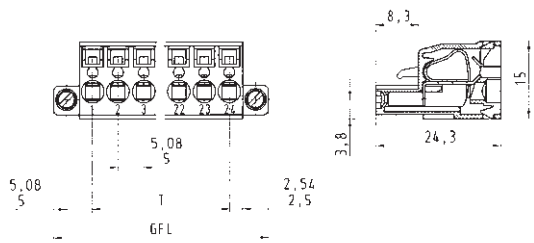


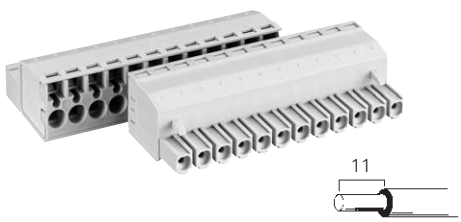


**Type 8113/8213 BFK**

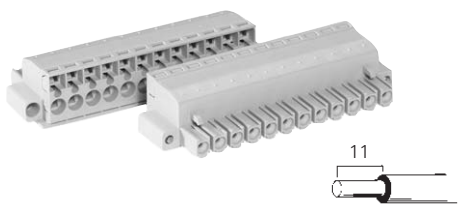


**Type 8113/8213 BFK .../F**

* When using ferrules for conductor cross section of 2.5 mm, use only ferrule no. 05.596.6127.0.

| | | | | | | |
|---|---|---|---|---|---|---|
| Rated voltages: VDE 0110 | | | | | | |
| UL ratings | No. 22 – 12 AWG | 300 V | 12 A | No. 22 – 12 AWG | 300 V | 12 A |
| CSA ratings | No. 22 – 12 AWG | 300 V | 12 A | No. 22 – 12 AWG | 300 V | 12 A |
| Approvals | | | | | | |

| Std. pack | GFL | G | T | Poles | Part no. unmarked | Part no. marked | Part no. unmarked | Part no. marked |
|---|---|---|---|---|---|---|---|---|
| **Spacing: 5.00 mm** | | | | | | | | |
| 100 | 22.54 | 10 | 5 | 2 | 25.820.3253.0 | 25.820.0253.0 | 25.821.3253.0 | 25.821.0253.0 |
| 100 | 27.54 | 15 | 10 | 3 | 25.820.3353.0 | 25.820.0353.0 | 25.821.3353.0 | 25.821.0353.0 |
| 50 | 32.54 | 20 | 15 | 4 | 25.820.3453.0 | 25.820.0453.0 | 25.821.3453.0 | 25.821.0453.0 |
| 50 | 37.54 | 25 | 20 | 5 | 25.820.3553.0 | 25.820.0553.0 | 25.821.3553.0 | 25.821.0553.0 |
| 50 | 42.54 | 30 | 25 | 6 | 25.820.3653.0 | 25.820.0653.0 | 25.821.3653.0 | 25.821.0653.0 |
| 50 | 47.54 | 35 | 30 | 7 | 25.820.3753.0 | 25.820.0753.0 | 25.821.3753.0 | 25.821.0753.0 |
| 50 | 52.54 | 40 | 35 | 8 | 25.820.3853.0 | 25.820.0853.0 | 25.821.3853.0 | 25.821.0853.0 |
| 50 | 57.54 | 45 | 40 | 9 | 25.820.3953.0 | 25.820.0953.0 | 25.821.3953.0 | 25.821.0953.0 |
| 50 | 62.54 | 50 | 45 | 10 | 25.820.4053.0 | 25.820.1053.0 | 25.821.4053.0 | 25.821.1053.0 |
| 50 | 67.54 | 55 | 50 | 11 | 25.820.4153.0 | 25.820.1153.0 | 25.821.4153.0 | 25.821.1153.0 |
| 50 | 72.54 | 60 | 55 | 12 | 25.820.4253.0 | 25.820.1253.0 | 25.821.4253.0 | 25.821.1253.0 |
| 50 | 77.54 | 65 | 60 | 13 | 25.820.4353.0 | 25.820.1353.0 | 25.821.4353.0 | 25.821.1353.0 |
| 50 | 82.54 | 70 | 65 | 14 | 25.820.4453.0 | 25.820.1453.0 | 25.821.4453.0 | 25.821.1453.0 |
| 50 | 87.54 | 75 | 70 | 15 | 25.820.4553.0 | 25.820.1553.0 | 25.821.4553.0 | 25.821.1553.0 |
| 50 | 92.54 | 80 | 75 | 16 | 25.820.4653.0 | 25.820.1653.0 | 25.821.4653.0 | 25.821.1653.0 |
| | | | | | 17 to 24pole upon request | | 17 to 24pole upon request | |
| **Spacing: 5.08 mm** | | | | | unmarked | marked | unmarked | marked |
| 100 | 22.70 | 10.16 | 5.08 | 2 | 25.840.3253.0 | 25.840.0253.0 | 25.841.3253.0 | 25.841.0253.0 |
| 100 | 27.78 | 15.24 | 10.16 | 3 | 25.840.3353.0 | 25.840.0353.0 | 25.841.3353.0 | 25.841.0353.0 |
| 50 | 32.86 | 20.32 | 15.24 | 4 | 25.840.3453.0 | 25.840.0453.0 | 25.841.3453.0 | 25.841.0453.0 |
| 50 | 37.94 | 25.40 | 20.32 | 5 | 25.840.3553.0 | 25.840.0553.0 | 25.841.3553.0 | 25.841.0553.0 |
| 50 | 43.02 | 30.48 | 25.40 | 6 | 25.840.3653.0 | 25.840.0653.0 | 25.841.3653.0 | 25.841.0653.0 |
| 50 | 48.10 | 35.56 | 30.48 | 7 | 25.840.3753.0 | 25.840.0753.0 | 25.841.3753.0 | 25.841.0753.0 |
| 50 | 53.18 | 40.64 | 35.56 | 8 | 25.840.3853.0 | 25.840.0853.0 | 25.841.3853.0 | 25.841.0853.0 |
| 50 | 58.26 | 45.72 | 40.64 | 9 | 25.840.3953.0 | 25.840.0953.0 | 25.841.3953.0 | 25.841.0953.0 |
| 50 | 63.34 | 50.80 | 45.72 | 10 | 25.840.4053.0 | 25.840.1053.0 | 25.841.4053.0 | 25.841.1053.0 |
| 50 | 68.42 | 55.88 | 50.80 | 11 | 25.840.4153.0 | 25.840.1153.0 | 25.841.4153.0 | 25.841.1153.0 |
| 50 | 73.50 | 60.96 | 55.88 | 12 | 25.840.4253.0 | 25.840.1253.0 | 25.841.4253.0 | 25.841.1253.0 |
| 50 | 78.58 | 66.04 | 60.96 | 13 | 25.840.4353.0 | 25.840.1353.0 | 25.841.4353.0 | 25.841.1353.0 |
| 50 | 83.66 | 71.12 | 66.04 | 14 | 25.840.4453.0 | 25.840.1453.0 | 25.841.4453.0 | 25.841.1453.0 |
| 50 | 88.74 | 76.20 | 71.12 | 15 | 25.840.4553.0 | 25.840.1553.0 | 25.841.4553.0 | 25.841.1553.0 |
| 50 | 93.82 | 81.28 | 76.20 | 16 | 25.840.4653.0 | 25.840.1653.0 | 25.841.4653.0 | 25.841.1653.0 |
| | | | | | 17 to 24pole upon request | | 17 to 24pole upon request | |

# PC board connectors, spring clamp connection
# Spacings: 5.08 mm

codable

**2.5 mm²**

Rated cross section*:
2.5 mm²

Rated current:
12 A

Connection range:
0,14 – 2.5 mm² solid / fine stranded

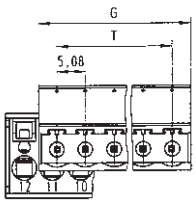


250 V/4 kV/3 – Overvoltage category III
400 V/4 kV/2 – Overvoltage category II
1000 V/4 kV/1 – Overvoltage category I

* When using ferrules for conductor cross section of 2.5 mm, use only ferrule no. 05.596.6127.0.

**Type 8213 SUFK**

| | | | |
|---|---|---|---|
| Rated voltages: VDE 0110 | | | |
| UL ratings | No. 22 – 12 AWG | 300 V | 12 A |
| CSA ratings | No. 22 – 12 AWG | 300 V | 12 A |
| Approvals available soon | | | |

| Std. pack | G | T | Poles | Part no. unmarked | Part no. marked |
|---|---|---|---|---|---|
| **Spacing: 5.08 mm** | | | | | |
| 100 | 10.16 | 5.08 | 2 | 25.857.3253.0 | 25.857.0253.0 |
| 100 | 15.24 | 10.16 | 3 | 25.857.3353.0 | 25.857.0353.0 |
| 50 | 20.32 | 15.24 | 4 | 25.857.3453.0 | 25.857.0453.0 |
| 50 | 25.40 | 20.32 | 5 | 25.857.3553.0 | 25.857.0553.0 |
| 50 | 30.48 | 25.40 | 6 | 25.857.3653.0 | 25.857.0653.0 |
| 50 | 35.56 | 30.48 | 7 | 25.857.3753.0 | 25.857.0753.0 |
| 50 | 40.64 | 35.56 | 8 | 25.857.3853.0 | 25.857.0853.0 |
| 50 | 45.72 | 40.64 | 9 | 25.857.3953.0 | 25.857.0953.0 |
| 50 | 50.80 | 45.72 | 10 | 25.857.4053.0 | 25.857.1053.0 |
| 50 | 55.88 | 50.80 | 11 | 25.857.4153.0 | 25.857.1153.0 |
| 50 | 60.96 | 55.88 | 12 | 25.857.4253.0 | 25.857.1253.0 |
| 50 | 66.04 | 60.96 | 13 | 25.857.4353.0 | 25.857.1353.0 |
| 50 | 71.12 | 66.04 | 14 | 25.857.4453.0 | 25.857.1453.0 |
| 50 | 76.20 | 71.12 | 15 | 25.857.4553.0 | 25.857.1553.0 |
| 50 | 81.28 | 76.20 | 16 | 25.857.4653.0 | 25.857.1653.0 |
| 17 to 24pole upon request | | | | | |
| **Accessories:** | | | | | |
| Coding piece (strip) | 100 | | | 05.561.9153.0 | |
| Screwdriver DIN 5264 A 0.6 x 3.5 | 5 | | | 06.502.4000.0 | |

# PC board connectors, spring clamp connection
# Spacing: 7.62 mm

**wiecon** PCB

Rated cross section*:
2.5 mm²

Rated current:
12 A

Connection range:
0.14 – 2.5 mm² solid / fine standed

400 V/6 kV/3– Overvoltage category III
** 690 V/6 kV/2 – Overvoltage category II
1000 V/6 kV/1 – Overvoltage category I

* When using ferrules for conductor cross section of 2.5 mm, use only ferrule no. 05.596.6127.0.

** max. 600 V for ungrounded networks or expected overvoltage ≤ 3 kV for L ≥ 2.00 mm and ≤ 2.5 kV for 2.0 mm > L ≥ 1.5 mm

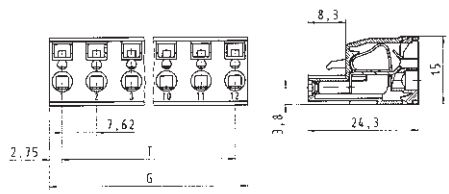


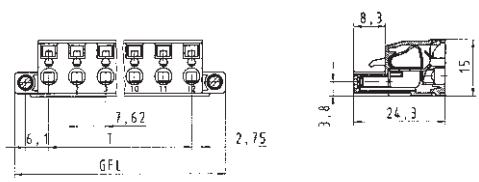


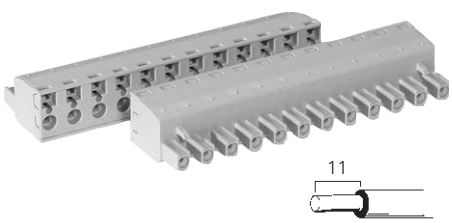


**Type 8413 BFK**

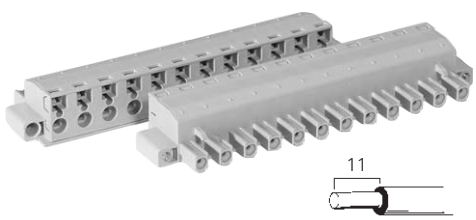


**Type 8413 BFK/... F**

| | | | | | | | | |
|---|---|---|---|---|---|---|---|---|
| VDE 0110 | | | | | | | | |
| UL ratings | | | | | No. 22 – 12 AWG | 300 V | 12 A | No. 22 – 12 AWG | 300 V | 12 A |
| CSA ratings | | | | | No. 22 – 12 AWG | 300 V | 12 A | No. 22 – 12 AWG | 300 V | 12 A |
| Approvals | | | | | | | | |

| Std. pack | GFL | G | T | Poles | Part no. | Part no. | Part no. | Part no. |
|---|---|---|---|---|---|---|---|---|
| **Spacing: 7.62 mm** | | | | | unmarked | marked | unmarked | marked |
| 100 | 25.66 | 13.12 | 7.62 | 2 | 25.880.3253.0 | 25.880.0253.0 | 25.881.3253.0 | 25.881.0253.0 |
| 100 | 33.28 | 20.74 | 15.24 | 3 | 25.880.3353.0 | 25.880.0353.0 | 25.881.3353.0 | 25.881.0353.0 |
| 50 | 40.90 | 28.36 | 22.86 | 4 | 25.880.3453.0 | 25.880.0453.0 | 25.881.3453.0 | 25.881.0453.0 |
| 50 | 48.52 | 35.98 | 30.48 | 5 | 25.880.3553.0 | 25.880.0553.0 | 25.881.3553.0 | 25.881.0553.0 |
| 50 | 56.14 | 43.60 | 38.10 | 6 | 25.880.3653.0 | 25.880.0653.0 | 25.881.3653.0 | 25.881.0653.0 |
| 50 | 63.76 | 51.22 | 45.72 | 7 | 25.880.3753.0 | 25.880.0753.0 | 25.881.3753.0 | 25.881.0753.0 |
| 50 | 71.38 | 58.84 | 53.34 | 8 | 25.880.3853.0 | 25.880.0853.0 | 25.881.3853.0 | 25.881.0853.0 |
| 50 | 79.00 | 66.46 | 60.96 | 9 | 25.880.3953.0 | 25.880.0953.0 | 25.881.3953.0 | 25.881.0953.0 |
| 50 | 86.62 | 74.08 | 68.58 | 10 | 25.880.4053.0 | 25.880.1053.0 | 25.881.4053.0 | 25.881.1053.0 |
| 50 | 94.24 | 81.70 | 76.20 | 11 | 25.880.4153.0 | 25.880.1153.0 | 25.881.4153.0 | 25.881.1153.0 |
| 50 | 101.86 | 89.32 | 83.82 | 12 | 25.880.4253.0 | 25.880.1253.0 | 25.881.4253.0 | 25.881.1253.0 |

# PC board connector, inverted plug / solder version
# Spacing: 5.08 mm

codable

Rated current:
12 A

250 V/4 kV/3 – Overvoltage category III
*690 V/4 kV/2 – Overvoltage category II
1000 V/4 kV/1 – Overvoltage category I

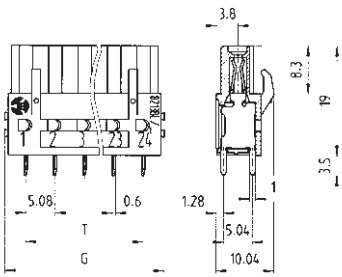


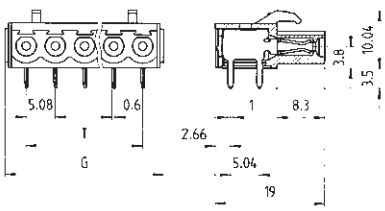


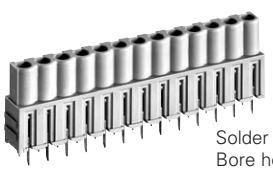

Solder pin 0.6 x 1 mm
Bore hole Ø 1.2 mm

Solder pin 0.6 x 1 mm
Bore hole Ø 1.2 mm

* max. 600 V for ungrounded networks or expected overvoltage ≤ 3 kV for L ≥ 2.00 mm and ≤ 2.5 kV for 2.0 mm > L ≥ 1.5 mm

| | Type 8213 BL/... G<br>plug-in vertical to PC board | | Type 8213 BL/... W<br>plug-in horizontal to PC board | |
|---|---|---|---|---|
| Rated voltages: VDE 0110 | | | | |
| UL ratings | 300 V | 15 A | 300 V | 15 A |
| CSA ratings | 300 V | 15 A | 300 V | 15 A |
| Approvals | | | | |

| Std. pack | G | T | Poles | Part no. | Part no. | Part no. | Part no. |
|---|---|---|---|---|---|---|---|
| **Spacing: 5.08 mm** | | | | unmarked | marked | unmarked | marked |
| 100 | 12.36 | 5.08 | 2 | 25.342.3253.0 | 25.342.0253.0 | 25.343.3253.0 | 25.343.0253.0 |
| 100 | 17.44 | 10.16 | 3 | 25.342.3353.0 | 25.342.0353.0 | 25.343.3353.0 | 25.343.0353.0 |
| 50 | 22.52 | 15.24 | 4 | 25.342.3453.0 | 25.342.0453.0 | 25.343.3453.0 | 25.343.0453.0 |
| 50 | 27.60 | 20.32 | 5 | 25.342.3553.0 | 25.342.0553.0 | 25.343.3553.0 | 25.343.0553.0 |
| 50 | 32.68 | 25.40 | 6 | 25.342.3653.0 | 25.342.0653.0 | 25.343.3653.0 | 25.343.0653.0 |
| 50 | 37.76 | 30.48 | 7 | 25.342.3753.0 | 25.342.0753.0 | 25.343.3753.0 | 25.343.0753.0 |
| 50 | 42.84 | 35.56 | 8 | 25.342.3853.0 | 25.342.0853.0 | 25.343.3853.0 | 25.343.0853.0 |
| 50 | 47.92 | 40.64 | 9 | 25.342.3953.0 | 25.342.0953.0 | 25.343.3953.0 | 25.343.0953.0 |
| 50 | 53.00 | 45.72 | 10 | 25.342.4053.0 | 25.342.1053.0 | 25.343.4053.0 | 25.343.1053.0 |
| 50 | 58.08 | 50.80 | 11 | 25.342.4153.0 | 25.342.1153.0 | 25.343.4153.0 | 25.343.1153.0 |
| 50 | 63.16 | 55.88 | 12 | 25.342.4253.0 | 25.342.1253.0 | 25.343.4253.0 | 25.343.1253.0 |
| 50 | 68.24 | 60.96 | 13 | 25.342.4353.0 | 25.342.1353.0 | 25.343.4353.0 | 25.343.1353.0 |
| 50 | 73.32 | 66.04 | 14 | 25.342.4453.0 | 25.342.1453.0 | 25.343.4453.0 | 25.343.1453.0 |
| 50 | 78.40 | 71.12 | 15 | 25.342.4553.0 | 25.342.1553.0 | 25.343.4553.0 | 25.343.1553.0 |
| 50 | 83.48 | 76.20 | 16 | 25.342.4653.0 | 25.342.1653.0 | 25.343.4653.0 | 25.343.1653.0 |
| | 17 to 24pole upon request | | | | | | |
| **Accessories:** | | | | | | | |
| Coding piece (strip) | 100 | | | 05.561.9153.0 | | 05.561.9153.0 | |
| Fixing device | 100 | | | Z5.523.7853.0 | | Z5.523.7753.0 | |

# PC board connectors, pluggable
# Spacings: 5.00/5.08 mm

**wiecon** PCB

Rated cross section:
2.5 mm²

Rated current:
12 A, feed through current 2.2 mA per LED

Rated voltages:
Type 8113 B/... TOP, 8213 B/... TOP
250 V/4 kV/3 – Overvoltage category III
400 V/4 kV/2 – Overvoltage category II
1000 V/4 kV/1 – Overvoltage category I

Type 8113 B/... TOP LED
24 V/4 kV/3 – Overvoltage category III
24 V/4 kV/2 – Overvoltage category II
24 V/4 kV/1 – Overvoltage category I

Connection range:
0.14 – 2.5 mm² solid / fine standed

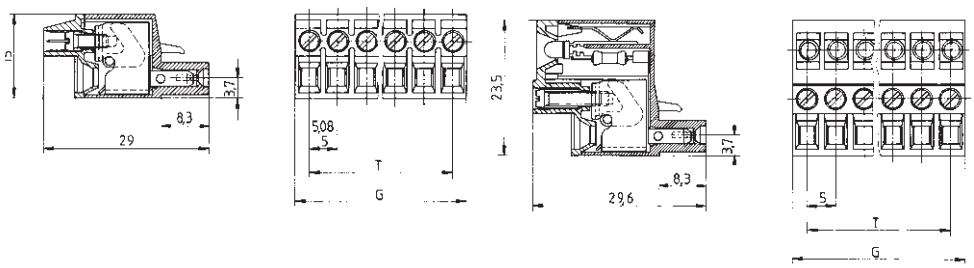


**TOP connection LED with common negative pole**

**Type 8113 B/... TOP, 8213 B/... TOP**
plug-in 180° to wire entry

**Type 8113 B/... TOP LED**
plug-in 180° to wire entry

| | | | | | |
|---|---|---|---|---|---|
| Rated voltages: VDE 0110 | | | | | |
| UL ratings | No. 22 – 12 AWG | 300 V | 15 A | No. 22 – 12 AWG | 24 V | 15 A |
| CSA ratings | No. 22 – 12 AWG | 300 V | 15 A | No. 22 – 12 AWG | 24 V | 15 A |
| Approvals | | | | | |

| Std. pack | TOP | G | T | Poles | Part no. | Part no. | Part no. | Part no. |
|---|---|---|---|---|---|---|---|---|
| **Spacing: 5.00 mm** | | | | | unmarked | marked | unmarked | marked |
| 100 | 250 | 10 | 5 | 2 | 25.220.3253.0 | 25.220.0253.0 | 25.230.3253.0 | 25.230.0253.0 |
| 100 | 250 | 15 | 10 | 3 | 25.220.3353.0 | 25.220.0353.0 | 25.230.3353.0 | 25.230.0353.0 |
| 50 | 200 | 20 | 15 | 4 | 25.220.3453.0 | 25.220.0453.0 | 25.230.3453.0 | 25.230.0453.0 |
| 50 | 200 | 25 | 20 | 5 | 25.220.3553.0 | 25.220.0553.0 | 25.230.3553.0 | 25.230.0553.0 |
| 50 | 200 | 30 | 25 | 6 | 25.220.3653.0 | 25.220.0653.0 | 25.230.3653.0 | 25.230.0653.0 |
| 50 | 100 | 35 | 30 | 7 | 25.220.3753.0 | 25.220.0753.0 | 25.230.3753.0 | 25.230.0753.0 |
| 50 | 100 | 40 | 35 | 8 | 25.220.3853.0 | 25.220.0853.0 | 25.230.3853.0 | 25.230.0853.0 |
| 50 | 100 | 45 | 40 | 9 | 25.220.3953.0 | 25.220.0953.0 | 25.230.3953.0 | 25.230.0953.0 |
| 50 | 100 | 50 | 45 | 10 | 25.220.4053.0 | 25.220.1053.0 | 25.230.4053.0 | 25.230.1053.0 |
| 50 | 100 | 55 | 50 | 11 | 25.220.4153.0 | 25.220.1153.0 | 25.230.4153.0 | 25.230.1153.0 |
| 50 | 100 | 60 | 55 | 12 | 25.220.4253.0 | 25.220.1253.0 | 25.230.4253.0 | 25.230.1253.0 |
| 50 | 50 | 65 | 60 | 13 | 25.220.4353.0 | 25.220.1353.0 | 25.230.4353.0 | 25.230.1353.0 |
| 50 | 50 | 70 | 65 | 14 | 25.220.4453.0 | 25.220.1453.0 | 25.230.4453.0 | 25.230.1453.0 |
| 50 | 50 | 75 | 70 | 15 | 25.220.4553.0 | 25.220.1553.0 | 25.230.4553.0 | 25.230.1553.0 |
| 50 | 50 | 80 | 75 | 16 | 25.220.4653.0 | 25.220.1653.0 | 25.230.4653.0 | 25.230.1653.0 |
| | | 117 to 24pole upon request | | | | | | |
| **Spacing: 5.08 mm** | | | | | unmarked | marked | | |
| 100 | 250 | 10.16 | 5.08 | 2 | 25.240.3253.0 | 25.240.0253.0 | | |
| 100 | 250 | 15.24 | 10.16 | 3 | 25.240.3353.0 | 25.240.0353.0 | | |
| 50 | 200 | 20.32 | 15.24 | 4 | 25.240.3453.0 | 25.240.0453.0 | | |
| 50 | 200 | 25.40 | 20.32 | 5 | 25.240.3553.0 | 25.240.0553.0 | | |
| 50 | 200 | 30.48 | 25.40 | 6 | 25.240.3653.0 | 25.240.0653.0 | | |
| 50 | 100 | 35.56 | 30.48 | 7 | 25.240.3753.0 | 25.240.0753.0 | | |
| 50 | 100 | 40.64 | 35.56 | 8 | 25.240.3853.0 | 25.240.0853.0 | | |
| 50 | 100 | 45.72 | 40.64 | 9 | 25.240.3953.0 | 25.240.0953.0 | | |
| 50 | 100 | 50.80 | 45.72 | 10 | 25.240.4053.0 | 25.240.1053.0 | | |
| 50 | 100 | 55.88 | 50.80 | 11 | 25.240.4153.0 | 25.240.1153.0 | | |
| 50 | 100 | 60.96 | 55.88 | 12 | 25.240.4253.0 | 25.240.1253.0 | | |
| 50 | 50 | 66.04 | 60.96 | 13 | 25.240.4353.0 | 25.240.1353.0 | | |
| 50 | 50 | 71.12 | 66.04 | 14 | 25.240.4453.0 | 25.240.1453.0 | | |
| 50 | 50 | 76.20 | 71.12 | 15 | 25.240.4553.0 | 25.240.1553.0 | | |
| 50 | 50 | 81.28 | 76.20 | 16 | 25.240.4653.0 | 25.240.1653.0 | | |
| | | 17 to 24pole upon request | | | | | | |

# Insulated headers for PC boards
# Spacings: 5.00/5.08 mm

codable

Rated current:
12 A

250 V/4 kV/3 – Overvoltage category III
400 V/4 kV/2 – Overvoltage category II
1000 V/4 kV/1 – Overvoltage category I

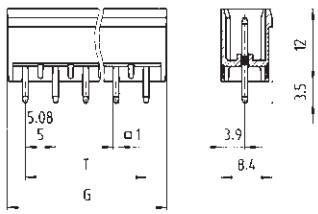


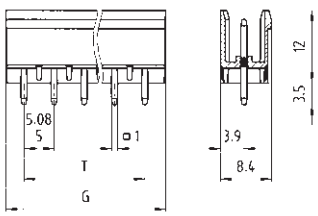

Solder pin 1 x 1 mm
Bore hole Ø 1.4 mm

**closed version**

**Type 8113 S/... G, 8213 S/... G**
vertical mount

Solder pin 1 x 1 mm
Bore hole Ø 1.4 mm

**open version**

**Type 8113 S/... GOF, 8213 S/... GOF**
vertical mount

| | | | | | | | | | |
|---|---|---|---|---|---|---|---|---|---|
| Rated voltages: VDE 0110 | | | | | | | | | |
| UL ratings | | | | | 300 V | 15 A | | 300 V | 15 A |
| CSA ratings | | | | | 300 V | 15 A | | 300 V | 15 A |
| Approvals | | | | | | | | | |
| Std. pack | G | T | Poles | Part no. | Part no. | G | T | Part no. | |
| **Spacing: 5.00 mm** | | | | unmarked | | | | unmarked | |
| 100 | 10.16 | 5 | 2 | 25.330.3253.0 | | 10 | 5 | 99.202.9996.0 | |
| 100 | 15.24 | 10 | 3 | 25.330.3353.0 | | 15 | 10 | 99.203.9996.0 | |
| 50 | 20.32 | 15 | 4 | 25.330.3453.0 | | 20 | 15 | 99.204.9996.0 | |
| 50 | 25.40 | 20 | 5 | 25.330.3553.0 | | 25 | 20 | 99.205.9996.0 | |
| 50 | 30.48 | 25 | 6 | 25.330.3653.0 | | 30 | 25 | 99.206.9996.0 | |
| 50 | 35.56 | 30 | 7 | 25.330.3753.0 | | 35 | 30 | 99.207.9996.0 | |
| 50 | 40.64 | 35 | 8 | 25.330.3853.0 | | 40 | 35 | 99.208.9996.0 | |
| 50 | 45.72 | 40 | 9 | 25.330.3953.0 | | 45 | 40 | 99.209.9996.0 | |
| 50 | 50.80 | 45 | 10 | 25.330.4053.0 | | 50 | 45 | 99.210.9996.0 | |
| 50 | 55.88 | 50 | 11 | 25.330.4153.0 | | 55 | 50 | 99.211.9996.0 | |
| 50 | 60.96 | 55 | 12 | 25.330.4253.0 | | 60 | 55 | 99.212.9996.0 | |
| 50 | 66.04 | 60 | 13 | 25.330.4353.0 | | 65 | 60 | 99.213.9996.0 | |
| 50 | 71.12 | 65 | 14 | 25.330.4453.0 | | 70 | 65 | 99.214.9996.0 | |
| 50 | 76.20 | 70 | 15 | 25.330.4553.0 | | 75 | 70 | 99.215.9996.0 | |
| 50 | 81.28 | 75 | 16 | 25.330.4653.0 | | 80 | 75 | 99.216.9996.0 | |
| 17 to 24pole upon request | | | | | | | | 17 to 24pole upon request | |
| **Spacing: 5.08 mm** | | | | unmarked | | | | unmarked | |
| 100 | 11.56 | 5.08 | 2 | 25.350.3253.0 | | 10.16 | 5,08 | 99.232.9996.1 | |
| 100 | 16.64 | 10.16 | 3 | 25.350.3353.0 | | 15.24 | 10,16 | 99.233.9996.1 | |
| 50 | 21.72 | 15.24 | 4 | 25.350.3453.0 | | 20.32 | 15,24 | 99.234.9996.1 | |
| 50 | 26.80 | 20.32 | 5 | 25.350.3553.0 | | 25.40 | 20,32 | 99.235.9996.1 | |
| 50 | 31.88 | 25.40 | 6 | 25.350.3653.0 | | 30.48 | 25,40 | 99.236.9996.1 | |
| 50 | 36.96 | 30.48 | 7 | 25.350.3753.0 | | 35.56 | 30,48 | 99.237.9996.1 | |
| 50 | 42.04 | 35.56 | 8 | 25.350.3853.0 | | 40.64 | 35,56 | 99.238.9996.1 | |
| 50 | 47.12 | 40.64 | 9 | 25.350.3953.0 | | 45.72 | 40,64 | 99.239.9996.1 | |
| 50 | 52.20 | 45.72 | 10 | 25.350.4053.0 | | 50.80 | 45,72 | 99.240.9996.1 | |
| 50 | 57.28 | 50.80 | 11 | 25.350.4153.0 | | 55.88 | 50,80 | 99.241.9996.1 | |
| 50 | 62.36 | 55.88 | 12 | 25.350.4253.0 | | 60.96 | 55,88 | 99.242.9996.1 | |
| 50 | 67.44 | 60.96 | 13 | 25.350.4353.0 | | 66.04 | 60,96 | 99.243.9996.1 | |
| 50 | 72.52 | 66.04 | 14 | 25.350.4453.0 | | 70.12 | 66,04 | 99.244.9996.1 | |
| 50 | 77.60 | 71.12 | 15 | 25.350.4553.0 | | 75.20 | 71,12 | 99.245.9996.1 | |
| 50 | 82.68 | 76.20 | 16 | 25.350.4653.0 | | 80.28 | 76,20 | 99.246.9996.1 | |
| 17 to 24pole upon request | | | | | | | | 17 to 24pole upon request | |
| **Accessories:** | | | | | | | | | |
| Coding piece (strip) | 100 | | | 05.561.0053.0 | | 05.561.0053.0 | | | |
| Fixing device assembly - for screw flanges on both sides of the header | 100 | | | Z5.523.2453.0 | | | | | |

# Insulated headers for PC boards
# Spacings: 5.00/5.08 mm

**wiecon** PCB

codable

Rated current:
12 A

Rated voltages:
250 V/4 kV/3 – Overvoltage category III
400 V/4 kV/2 – Overvoltage category II
1000 V/4 kV/1 – Overvoltage category I

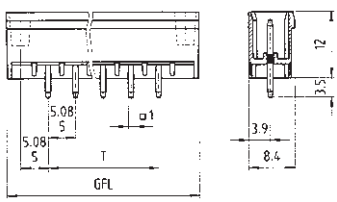


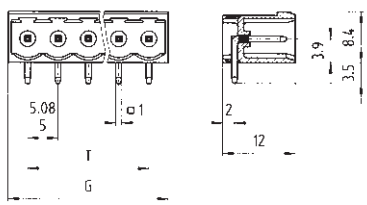

Solder pin 1 x 1 mm
Bore hole Ø 1.4 mm

**with screw flange**

**Type 8113 S/... GF, 8213 S/... GF**
vertical mount

Solder pin 1 x 1 mm
Bore hole Ø 1.4 mm

**closed version**

**Type 8113 S/... W, 8213 S/... W**
horizontal mount

| | | | | | | | | |
|---|---|---|---|---|---|---|---|---|
| Rated voltages: VDE 0110 | | | | | | | | |
| UL ratings | | | | 300 V | 15 A | | 300 V | 15 A |
| CSA ratings | | | | 300 V | 15 A | | 300 V | 15 A |
| Approvals | | | | | | | | |

| Std. pack | G | T | Poles | Part no. | Part no. | GFL | T | Part no. |
|---|---|---|---|---|---|---|---|---|
| **Spacing: 5.00 mm** | | | | unmarked | | | | unmarked |
| 100 | 11.40 | 5 | 2 | 25.338.3253.0 | | 20 | 5 | 25.332.3253.0 |
| 100 | 16.40 | 10 | 3 | 25.338.3353.0 | | 25 | 10 | 25.332.3353.0 |
| 50 | 21.40 | 15 | 4 | 25.338.3453.0 | | 30 | 15 | 25.332.3453.0 |
| 50 | 26.40 | 20 | 5 | 25.338.3553.0 | | 35 | 20 | 25.332.3553.0 |
| 50 | 31.40 | 25 | 6 | 25.338.3653.0 | | 40 | 25 | 25.332.3653.0 |
| 50 | 36.40 | 30 | 7 | 25.338.3753.0 | | 45 | 30 | 25.332.3753.0 |
| 50 | 41.40 | 35 | 8 | 25.338.3853.0 | | 50 | 35 | 25.332.3853.0 |
| 50 | 46.40 | 40 | 9 | 25.338.3953.0 | | 55 | 40 | 25.332.3953.0 |
| 50 | 51.40 | 45 | 10 | 25.338.4053.0 | | 60 | 45 | 25.332.4053.0 |
| 50 | 56.40 | 50 | 11 | 25.338.4153.0 | | 65 | 50 | 25.332.4153.0 |
| 50 | 61.40 | 55 | 12 | 25.338.4253.0 | | 70 | 55 | 25.332.4253.0 |
| 50 | 66.40 | 60 | 13 | 25.338.4353.0 | | 75 | 60 | 25.332.4353.0 |
| 50 | 71.40 | 65 | 14 | 25.338.4453.0 | | 80 | 65 | 25.332.4453.0 |
| 50 | 76.40 | 70 | 15 | 25.338.4553.0 | | 85 | 70 | 25.332.4553.0 |
| 50 | 81.40 | 75 | 16 | 25.338.4653.0 | | 90 | 75 | 25.332.4653.0 |
| | | | | 17 to 22pole upon request | | | | 17 to 24pole upon request |
| **Spacing: 5.08 mm** | | | | unmarked | | | | unmarked |
| 100 | 11.56 | 5.08 | 2 | 25.359.3253.0 | | 20.32 | 5,08 | 25.352.3253.0 |
| 100 | 16.64 | 10.16 | 3 | 25.359.3353.0 | | 25.40 | 10,16 | 25.352.3353.0 |
| 50 | 21.72 | 15.24 | 4 | 25.359.3453.0 | | 30.48 | 15,24 | 25.352.3453.0 |
| 50 | 26.80 | 20.32 | 5 | 25.359.3553.0 | | 35.56 | 20,32 | 25.352.3553.0 |
| 50 | 31.88 | 25.40 | 6 | 25.359.3653.0 | | 40.64 | 25,40 | 25.352.3653.0 |
| 50 | 36.96 | 30.48 | 7 | 25.359.3753.0 | | 45.72 | 30,48 | 25.352.3753.0 |
| 50 | 42.04 | 35.56 | 8 | 25.359.3853.0 | | 50.80 | 35,56 | 25.352.3853.0 |
| 50 | 47.12 | 40.64 | 9 | 25.359.3953.0 | | 55.88 | 40,64 | 25.352.3953.0 |
| 50 | 52.20 | 45.72 | 10 | 25.359.4053.0 | | 60.96 | 45,72 | 25.352.4053.0 |
| 50 | 57.28 | 50.80 | 11 | 25.359.4153.0 | | 66.04 | 50,80 | 25.352.4153.0 |
| 50 | 62.36 | 55.88 | 12 | 25.359.4253.0 | | 71.12 | 55,88 | 25.352.4253.0 |
| 50 | 67.44 | 60.96 | 13 | 25.359.4353.0 | | 76.20 | 60,96 | 25.352.4353.0 |
| 50 | 72.52 | 66.04 | 14 | 25.359.4453.0 | | 81.28 | 66,04 | 25.352.4453.0 |
| 50 | 77.60 | 71.12 | 15 | 25.359.4553.0 | | 86.36 | 71,12 | 25.352.4553.0 |
| 50 | 82.68 | 76.20 | 16 | 25.359.4653.0 | | 91.44 | 76,20 | 25.352.4653.0 |
| | | | | 17 to 22pole upon request | | | | 17 to 24pole upon request |
| **Accessories:** | | | | | | | | |
| Coding piece (strip) | 100 | | | 05.561.0053.0 | | 05.561.0053.0 | | |
| Fixing device assembly - for screw flanges on both sides of the header | 100 | | | Z5.523.2453.0 | | Z5.523.2453.0 | | |

# Insulated headers for PC boards
# Spacings: 5.00/5.08 mm

codable

Rated current:
12 A

250 V/4 kV/3 – Overvoltage category III
400 V/4 kV/2 – Overvoltage category II
1000 V/4 kV/1 – Overvoltage category I

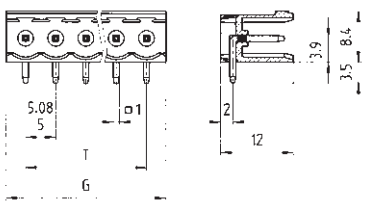


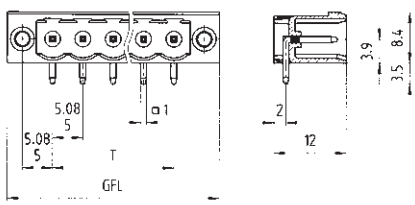

Solder pin 1 x 1 mm
Bore hole Ø 1.4 mm

**open version**

**Type 8113 S/... WOF, 8213 S/... WOF**
horizontal mount

Solder pin 1 x 1 mm
Bore hole Ø 1.4 mm

**with screw flange**

**Type 8113 S/... WF, 8213 S/... WF**
horizontal mount

| | | | | | | | | | |
|---|---|---|---|---|---|---|---|---|---|
| Rated voltages: VDE 0110 | | | | | | | | | |
| UL ratings | | | | 300 V | 15 A | | | 300 V | 15 A |
| CSA ratings | | | | 300 V | 15 A | | | 300 V | 15 A |
| Approvals | | | | | | | | | |
| Std. pack | G | T | Poles | Part no. | Part no. | GFL | G | T | Part no. |
| **Spacing: 5.00 mm** | | | | unmarked | | | | | unmarked |
| 100 | 11.40 | 5 | 2 | 99.262.9996.0 | | 20 | 10 | 5 | 25.339.3253.0 |
| 100 | 16.40 | 10 | 3 | 99.263.9996.0 | | 25 | 15 | 10 | 25.339.3353.0 |
| 50 | 21.40 | 15 | 4 | 99.264.9996.0 | | 30 | 20 | 15 | 25.339.3453.0 |
| 50 | 26.40 | 20 | 5 | 99.265.9996.0 | | 35 | 25 | 20 | 25.339.3553.0 |
| 50 | 31.40 | 25 | 6 | 99.266.9996.0 | | 40 | 30 | 25 | 25.339.3653.0 |
| 50 | 36.40 | 30 | 7 | 99.267.9996.0 | | 45 | 35 | 30 | 25.339.3753.0 |
| 50 | 41.40 | 35 | 8 | 99.268.9996.0 | | 50 | 40 | 35 | 25.339.3853.0 |
| 50 | 46.40 | 40 | 9 | 99.269.9996.0 | | 55 | 45 | 40 | 25.339.3953.0 |
| 50 | 51.40 | 45 | 10 | 99.270.9996.0 | | 60 | 50 | 45 | 25.339.4053.0 |
| 50 | 56.40 | 50 | 11 | 99.271.9996.0 | | 65 | 55 | 50 | 25.339.4153.0 |
| 50 | 61.40 | 55 | 12 | 99.272.9996.0 | | 70 | 60 | 55 | 25.339.4253.0 |
| 50 | 66.40 | 60 | 13 | 99.273.9996.0 | | 75 | 65 | 60 | 25.339.4353.0 |
| 50 | 71.40 | 65 | 14 | 99.274.9996.0 | | 80 | 70 | 65 | 25.339.4453.0 |
| 50 | 76.40 | 70 | 15 | 99.275.9996.0 | | 85 | 75 | 70 | 25.339.4553.0 |
| 50 | 81.40 | 75 | 16 | 99.276.9996.0 | | 90 | 80 | 75 | 25.339.4653.0 |
| 17 to 24pole upon request | | | | | | | | | 17 to 22pole upon request |
| **Spacing: 5.08 mm** | | | | unmarked | | | | | unmarked |
| 100 | 11.56 | 5.08 | 2 | 99.202.9996.2 | | 20.32 | 10.16 | 5.08 | 25.358.3253.0 |
| 100 | 16.64 | 10.16 | 3 | 99.203.9996.2 | | 25.40 | 15.24 | 10.16 | 25.358.3353.0 |
| 50 | 21.72 | 15.24 | 4 | 99.204.9996.2 | | 30.48 | 20.32 | 15.24 | 25.358.3453.0 |
| 50 | 26.80 | 20.32 | 5 | 99.205.9996.2 | | 35.56 | 25.40 | 20.32 | 25.358.3553.0 |
| 50 | 31.88 | 25.40 | 6 | 99.206.9996.2 | | 40.64 | 30.48 | 25.40 | 25.358.3653.0 |
| 50 | 36.96 | 30.48 | 7 | 99.207.9996.2 | | 45.72 | 35.56 | 30.48 | 25.358.3753.0 |
| 50 | 42.04 | 35.56 | 8 | 99.208.9996.2 | | 50.80 | 40.64 | 35.56 | 25.358.3853.0 |
| 50 | 47.12 | 40.64 | 9 | 99.209.9996.2 | | 55.88 | 45.72 | 40.64 | 25.358.3953.0 |
| 50 | 52.20 | 45.72 | 10 | 99.210.9996.2 | | 60.96 | 50.80 | 45.72 | 25.358.4053.0 |
| 50 | 57.28 | 50.80 | 11 | 99.211.9996.2 | | 66.04 | 55.88 | 50.80 | 25.358.4153.0 |
| 50 | 62.36 | 55.88 | 12 | 99.212.9996.2 | | 71.12 | 60.96 | 55.88 | 25.358.4253.0 |
| 50 | 67.44 | 60.96 | 13 | 99.213.9996.2 | | 76.20 | 66.04 | 60.96 | 25.358.4353.0 |
| 50 | 72.52 | 66.04 | 14 | 99.214.9996.2 | | 81.28 | 71.12 | 66.04 | 25.358.4453.0 |
| 50 | 77.60 | 71.12 | 15 | 99.215.9996.2 | | 86.36 | 76.20 | 71.12 | 25.358.4553.0 |
| 50 | 82.68 | 76.20 | 16 | 99.216.9996.2 | | 91.44 | 81.28 | 76.20 | 25.358.4653.0 |
| 17 to 24pole upon request | | | | | | | | | 17 to 22pole upon request |
| **Accessories:** | | | | | | | | | |
| Coding piece (strip) | 100 | | | 05.561.0053.0 | | 05.561.0053.0 | | | |
| Fixing device assembly - for screw flanges on both sides of the header | 100 | | | Z5.523.2453.0 | | | | | |

# Insulated headers for PC boards
# Spacings: 7.50/7.62 mm

**wiecon** PCB

codable

Rated current:
12 A

250 V/4 kV/3 – Overvoltage category III
400 V/4 kV/2 – Overvoltage category II
1000 V/4 kV/1 – Overvoltage category I

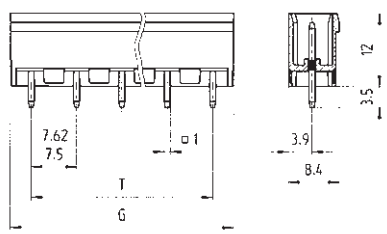


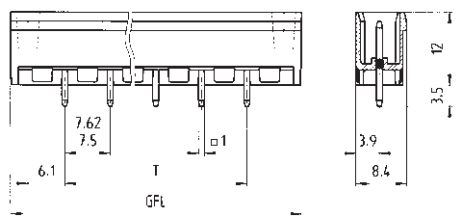

Solder pin 1 x 1 mm
Bore hole Ø 1.4 mm

**closed version**

**Type 8313 S/... G, 8413 S/... G**
vertical mount

Solder pin 1 x 1 mm
Bore hole Ø 1.4 mm

**with screw flange**

**Type 8313 S/... GF, 8413 S/... GF**
vertical mount

| | | | | | | | | |
|---|---|---|---|---|---|---|---|---|
| Rated voltages: VDE 0110 | | | | | | | | |
| UL ratings | | | | | 300 V | 15 A | 300 V | 15 A |
| CSA ratings | | | | | 300 V | 15 A | 300 V | 15 A |
| Approvals | | | | | | | | |
| Std. pack | G | T | Poles | Part no. | Part no. | GFL | T | Part no. |
| **Spacing: 7.50 mm** | | | | unmarked | | | | unmarked |
| 100 | 14.20 | 7.50 | 2 | 25.370.3253.0 | | 25.54 | 7,50 | 25.374.6253.0 |
| 100 | 21.70 | 15.00 | 3 | 25.370.3353.0 | | 33.04 | 15,00 | 25.374.6353.0 |
| 50 | 29.20 | 22.50 | 4 | 25.370.3453.0 | | 40.54 | 22,50 | 25.374.6453.0 |
| 50 | 36.70 | 30.00 | 5 | 25.370.3553.0 | | 48.04 | 30,00 | 25.374.6553.0 |
| 50 | 44.20 | 37.50 | 6 | 25.370.3653.0 | | 55.54 | 37,50 | 25.374.6653.0 |
| 50 | 51.70 | 45.00 | 7 | 25.370.3753.0 | | 63.04 | 45,00 | 25.374.6753.0 |
| 50 | 59.20 | 52.50 | 8 | 25.370.3853.0 | | 70.54 | 52,50 | 25.374.6853.0 |
| 50 | 66.70 | 60.00 | 9 | 25.370.3953.0 | | 78.04 | 60,00 | 25.374.6953.0 |
| 50 | 74.20 | 67.50 | 10 | 25.370.4053.0 | | 85.54 | 67,50 | 25.374.7053.0 |
| 50 | 81.70 | 75.00 | 11 | 25.370.4153.0 | | 93.04 | 75,00 | 25.374.7153.0 |
| 50 | 89.20 | 82.50 | 12 | 25.370.4253.0 | | 100.54 | 82,50 | 25.374.7253.0 |
| **Spacing: 7.62 mm** | | | | unmarked | | | | unmarked |
| 100 | 14.32 | 7.62 | 2 | 25.390.3253.0 | | 25.66 | 7,62 | 25.398.6253.0 |
| 100 | 21.94 | 15.24 | 3 | 25.390.3353.0 | | 33.25 | 15,24 | 25.398.6353.0 |
| 50 | 29.56 | 22.86 | 4 | 25.390.3453.0 | | 40.90 | 22,86 | 25.398.6453.0 |
| 50 | 37.18 | 30.48 | 5 | 25.390.3553.0 | | 48.52 | 30,48 | 25.398.6553.0 |
| 50 | 44.80 | 38.10 | 6 | 25.390.3653.0 | | 56.14 | 38,10 | 25.398.6653.0 |
| 50 | 52.42 | 45.72 | 7 | 25.390.3753.0 | | 63.76 | 45,72 | 25.398.6753.0 |
| 50 | 60.04 | 53.34 | 8 | 25.390.3853.0 | | 71.38 | 53,34 | 25.398.6853.0 |
| 50 | 67.66 | 60.64 | 9 | 25.390.3953.0 | | 79.00 | 60,64 | 25.398.6953.0 |
| 50 | 75.28 | 68.58 | 10 | 25.390.4053.0 | | 86.62 | 68,58 | 25.398.7053.0 |
| 50 | 82.90 | 76.20 | 11 | 25.390.4153.0 | | 94.24 | 76,20 | 25.398.7153.0 |
| 50 | 90.52 | 83.82 | 12 | 25.390.4253.0 | | 101.86 | 83,82 | 25.398.7253.0 |
| **Accessories:** | | | | | | | | |
| Coding piece (strip) | 100 | | | 05.561.0053.0 | | 05.561.0053.0 | | |
| Fixing device assembly - for screw flanges on both sides of the header | 100 | | | Z5.523.2453.0 | | | | |

# Insulated headers for PC boards
# Spacings: 7.50/7.62 mm

codable

Rated current:
12 A

400 V/6 kV/3 – Overvoltage category III
690 V/6 kV/2 – Overvoltage category II
1000 V/6 kV/1 – Overvoltage category I

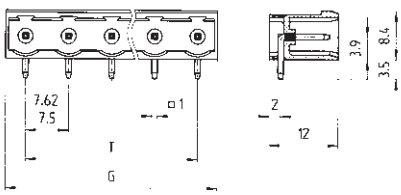


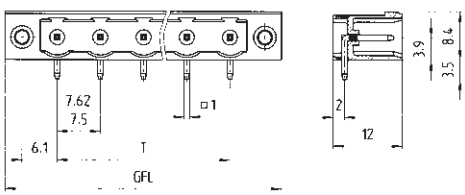

Solder pin 1 x 1 mm
Bore hole Ø 1.4 mm
**closed version**

**Type 8313 S/... W, 8413 S/... W**
horizontal mount

Solder pin 1 x 1 mm
Bore hole Ø 1.4 mm
**with screw flange**

**Type 8313 S/... WF, 8413 S/... WF**
horizontal mount

| | | |
|---|---|---|
| Rated voltages: VDE 0110 | | |
| UL ratings | 300 V | 15 A |
| CSA ratings | 300 V | 15 A |
| Approvals | | |

| | | | | | | | | |
|---|---|---|---|---|---|---|---|---|
| | Std. pack | G | T | Poles | Part no. | Part no. | GFL | T | Part no. |
| **Spacing: 7.50 mm** | | | | | unmarked | | | | unmarked |
| | 100 | 14.40 | 7.50 | 2 | 25.372.3253.0 | | 25.54 | 7.50 | 25.374.2253.0 |
| | 100 | 21.90 | 15.00 | 3 | 25.372.3353.0 | | 33.04 | 15.00 | 25.374.2353.0 |
| | 50 | 29.40 | 22.50 | 4 | 25.372.3453.0 | | 40.54 | 22.50 | 25.374.2453.0 |
| | 50 | 36.90 | 30.00 | 5 | 25.372.3553.0 | | 48.04 | 30.00 | 25.374.2553.0 |
| | 50 | 44.40 | 37.50 | 6 | 25.372.3653.0 | | 55.54 | 37.50 | 25.374.2653.0 |
| | 50 | 51.90 | 45.00 | 7 | 25.372.3753.0 | | 63.04 | 45.00 | 25.374.2753.0 |
| | 50 | 59.40 | 52.50 | 8 | 25.372.3853.0 | | 70.54 | 52.50 | 25.374.2853.0 |
| | 50 | 66.90 | 60.00 | 9 | 25.372.3953.0 | | 78.04 | 60.00 | 25.374.2953.0 |
| | 50 | 74.40 | 67.50 | 10 | 25.372.4053.0 | | 85.54 | 67.50 | 25.374.3053.0 |
| | 50 | 81.90 | 75.00 | 11 | 25.372.4153.0 | | 93.04 | 75.00 | 25.374.3153.0 |
| | 50 | 89.40 | 82.50 | 12 | 25.372.4253.0 | | 100.54 | 82.50 | 25.374.3253.0 |
| **Spacing: 7.62 mm** | | | | | unmarked | | | | unmarked |
| | 100 | 14.52 | 7.62 | 2 | 25.392.3253.0 | | 25.66 | 7.62 | 25.398.2253.0 |
| | 100 | 22.14 | 15.24 | 3 | 25.392.3353.0 | | 33.25 | 15.24 | 25.398.2353.0 |
| | 50 | 29.76 | 22.86 | 4 | 25.392.3453.0 | | 40.90 | 22.86 | 25.398.2453.0 |
| | 50 | 37.38 | 30.48 | 5 | 25.392.3553.0 | | 48.52 | 30.48 | 25.398.2553.0 |
| | 50 | 45.00 | 38.10 | 6 | 25.392.3653.0 | | 56.14 | 38.10 | 25.398.2653.0 |
| | 50 | 52.62 | 45.72 | 7 | 25.392.3753.0 | | 63.76 | 45.72 | 25.398.2753.0 |
| | 50 | 60.24 | 53.34 | 8 | 25.392.3853.0 | | 71.38 | 53.34 | 25.398.2853.0 |
| | 50 | 67.86 | 60.64 | 9 | 25.392.3953.0 | | 79.00 | 60.64 | 25.398.2953.0 |
| | 50 | 75.48 | 68.58 | 10 | 25.392.4053.0 | | 86.62 | 68.58 | 25.398.3053.0 |
| | 50 | 83.10 | 76.20 | 11 | 25.392.4153.0 | | 94.24 | 76.20 | 25.398.3153.0 |
| | 50 | 90.72 | 83.82 | 12 | 25.392.4253.0 | | 101.86 | 83.82 | 25.398.3253.0 |
| **Accessories:** | | | | | | | | | |
| Coding piece (strip) | 100 | | | | 05.561.0053.0 | | 05.561.0053.0 | | |
| Fixing device assembly - for screw flanges on both sides of the header | 100 | | | | Z5.523.2453.0 | | | | |

# Insulated headers for PC boards
# Spacings: 5.00/5.08 mm

**wiecon** PCB

codable

Rated current:
12 A

250 V/4 kV/3 – Overvoltage category III
400 V/4 kV/2 – Overvoltage category II
1000 V/4 kV/1 – Overvoltage category I

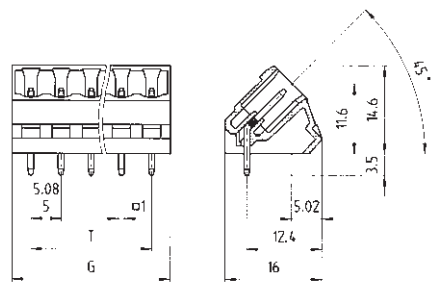


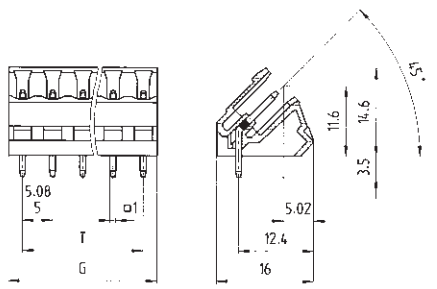

Solder pin 1 x 1 mm
Bore hole Ø 1.4 mm

**closed version**

**Type 8113 S/... S, 8213 S/... S**
plug-in 45° to PC board

Solder pin 1 x 1 mm
Bore hole Ø 1.4 mm

**open version**

**Type 8113 S/... S1, 8213 S/... S1**
plug-in 45° to PC board

| | | | | | | | | |
|---|---|---|---|---|---|---|---|---|
| Rated voltages: VDE 0110 | | | | | | | | |
| UL ratings | | | | 300 V | 15 A | | 300 V | 15 A |
| CSA ratings | | | | 300 V | 15 A | | 300 V | 15 A |
| Approvals | | | | | | | | |
| Std. pack | G | T | Poles | Part no. | Part no. | G | T | Part no. |
| **Spacing: 5.00 mm** | | | | unmarked | | | | unmarked |
| 100 | 11.20 | 5 | 2 | 25.394.3253.0 | | 9.60 | 5 | 25.395.3253.0 |
| 100 | 16.20 | 10 | 3 | 25.394.3353.0 | | 14.60 | 10 | 25.395.3353.0 |
| 50 | 21.20 | 15 | 4 | 25.394.3453.0 | | 19.60 | 15 | 25.395.3453.0 |
| 50 | 26.20 | 20 | 5 | 25.394.3553.0 | | 24.60 | 20 | 25.395.3553.0 |
| 50 | 31.20 | 25 | 6 | 25.394.3653.0 | | 29.60 | 25 | 25.395.3653.0 |
| 50 | 36.20 | 30 | 7 | 25.394.3753.0 | | 34.60 | 30 | 25.395.3753.0 |
| 50 | 41.20 | 35 | 8 | 25.394.3853.0 | | 39.60 | 35 | 25.395.3853.0 |
| 50 | 46.20 | 40 | 9 | 25.394.3953.0 | | 44.60 | 40 | 25.395.3953.0 |
| 50 | 51.20 | 45 | 10 | 25.394.4053.0 | | 49.60 | 45 | 25.395.4053.0 |
| 50 | 56.20 | 50 | 11 | 25.394.4153.0 | | 54.60 | 50 | 25.395.4153.0 |
| 50 | 61.20 | 55 | 12 | 25.394.4253.0 | | 59.60 | 55 | 25.395.4253.0 |
| 50 | 66.20 | 60 | 13 | 25.394.4353.0 | | 64.60 | 60 | 25.395.4353.0 |
| 50 | 71.20 | 65 | 14 | 25.394.4453.0 | | 69.60 | 65 | 25.395.4453.0 |
| 50 | 76.20 | 70 | 15 | 25.394.4553.0 | | 74.60 | 70 | 25.395.4553.0 |
| 50 | 81.20 | 75 | 16 | 25.394.4653.0 | | 79.60 | 75 | 25.395.4653.0 |
| | 17 to 24pole upon request | | | | | | | |
| **Spacing: 5.08 mm** | | | | unmarked | | | | unmarked |
| 100 | 11.36 | 5.08 | 2 | 25.396.3253.0 | | 9.76 | 5.08 | 25.397.3253.0 |
| 100 | 16.44 | 10.16 | 3 | 25.396.3353.0 | | 14.84 | 10.16 | 25.397.3353.0 |
| 50 | 21.52 | 15.24 | 4 | 25.396.3453.0 | | 19.92 | 15.24 | 25.397.3453.0 |
| 50 | 26.60 | 20.32 | 5 | 25.396.3553.0 | | 25.00 | 20.32 | 25.397.3553.0 |
| 50 | 31.68 | 25.40 | 6 | 25.396.3653.0 | | 30.08 | 25.40 | 25.397.3653.0 |
| 50 | 36.76 | 30.48 | 7 | 25.396.3753.0 | | 35.16 | 30.48 | 25.397.3753.0 |
| 50 | 41.84 | 35.56 | 8 | 25.396.3853.0 | | 40.24 | 35.56 | 25.397.3853.0 |
| 50 | 46.92 | 40.64 | 9 | 25.396.3953.0 | | 45.32 | 40.64 | 25.397.3953.0 |
| 50 | 52.00 | 45.72 | 10 | 25.396.4053.0 | | 50.40 | 45.72 | 25.397.4053.0 |
| 50 | 57.08 | 50.80 | 11 | 25.396.4153.0 | | 55.48 | 50.80 | 25.397.4153.0 |
| 50 | 62.19 | 55.88 | 12 | 25.396.4253.0 | | 60.56 | 55.88 | 25.397.4253.0 |
| 50 | 67.24 | 60.96 | 13 | 25.396.4353.0 | | 65.64 | 60.96 | 25.397.4353.0 |
| 50 | 72.32 | 66.04 | 14 | 25.396.4453.0 | | 70.72 | 66.04 | 25.397.4453.0 |
| 50 | 77.40 | 71.12 | 15 | 25.396.4553.0 | | 75.80 | 71.12 | 25.397.4553.0 |
| 50 | 82.48 | 76.20 | 16 | 25.396.4653.0 | | 80.88 | 76.20 | 25.397.4653.0 |
| | 17 to 24pole upon request | | | | | | | |
| **Accessories:** | | | | | | | | |
| Coding piece (strip) | 100 | | | 05.561.0053.0 | | 05.561.0053.0 | | |

# Two-tier insulated headers for PC boards
# Spacings: 5.00/5.08 mm

Rated current:
10 A

250 V/4 kV/3 – Overvoltage category III
400 V/4 kV/2 – Overvoltage category II
1000 V/4 kV/1 – Overvoltage category I

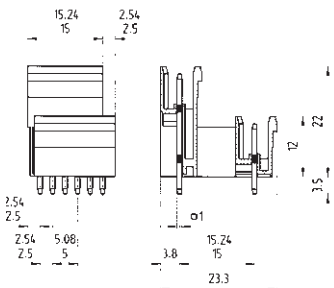

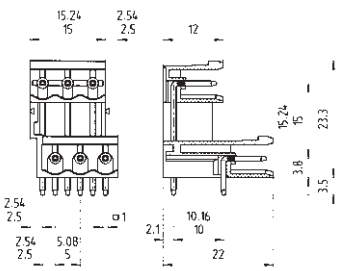

Solder pin 1 x 1 mm
Bore hole Ø 1.4 mm

Solder pin 1 x 1 mm
Bore hole Ø 1.4 mm

| | Type 8113 SE/... G, 8213 SE/... G<br>vertical mount | | | Type 8113 SE/... W, 8213 SE/... W<br>horizontal mount | | |
|---|---|---|---|---|---|---|
| Rated voltages: VDE 0110 | | | | | | |
| UL ratings | | 300 V | 15 A | | 300 V | 15 A |
| CSA ratings | | 300 V | 10 A | | 300 V | 10 A |
| Approvals | | | | | | |
| Std. pack / T / Poles | Part no. | Part no. | | Part no. | | |
| **Spacing: 5.00 mm** | unmarked | | | unmarked | | |
| 100 / 5 / 2 x 2 | 25.334.3253.0 | | | 25.336.3253.0 | | |
| 100 / 10 / 2 x 3 | 25.334.3353.0 | | | 25.336.3353.0 | | |
| Slide together for larger pole configurations. Factory assembly available. | | | | | | |
| **Spacing: 5.08 mm** | unmarked | | | unmarked | | |
| 100 / 5.08 / 2 x 2 | 25.354.3253.0 | | | 25.356.3253.0 | | |
| 100 / 10.16 / 2 x 3 | 25.354.3353.0 | | | 25.356.3353.0 | | |
| Slide together for larger pole configurations. Factory assembly available. | | | | | | |
| **Accessories:** | | | | | | |
| End plate / 50 | 07.310.9853.0 | | | 07.310.9853.0 | | |
| Fixing device assembly - for screw flanges on both sides of the header | upon request | | | only together with end plate 07.310.9853.0<br>Z5.523.2453.0 | | |

# Insulated header

# wiecon PCB

Rated current: 10 A

250 V/4 kV/3 – Overvoltage category III
400 V/4 kV/2 – Overvoltage category III
400 V/4 kV/2 – Overvoltage category II

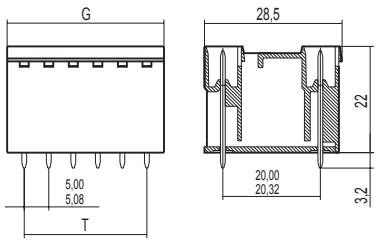


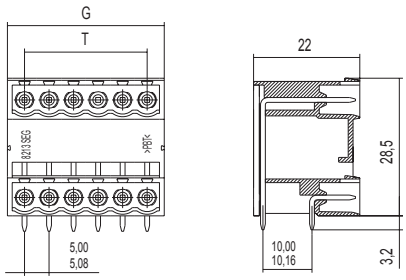

Solder pin 1 x 1 mm
Bore hole Ø 1.3 mm

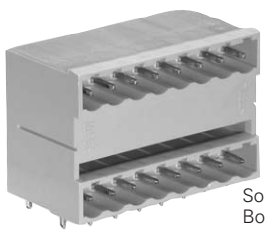

Solder pin 1 x 1 mm
Bore hole Ø 1.3 mm

| | Type 81-8213 SEG .../G<br>Vertical mount | Type 81-8213 SEG .../W<br>Horizontal mount |
|---|---|---|
| Rated voltages: VDE 0110 | 300 V 10 A | 300 V 10 A |
| UL ratings | 300 V 10 A | 300 V 10 A |
| CSA ratings | | |
| Approvals | | |

| Std. pack | G | T | Poles | Part no. | Part no. | Part no. | Part no. |
|---|---|---|---|---|---|---|---|
| **Spacing: 5.00 mm** | | | | unmarked | | unmarked | |
| 100 | 12 | 5 | 4 | 27.334.0253.0 | | 27.336.0253.0 | |
| 100 | 17 | 10 | 6 | 27.334.0353.0 | | 27.336.0353.0 | |
| 50 | 22 | 15 | 8 | 27.334.0453.0 | | 27.336.0453.0 | |
| 50 | 27 | 20 | 10 | 27.334.0553.0 | | 27.336.0553.0 | |
| 50 | 32 | 25 | 12 | 27.334.0653.0 | | 27.336.0653.0 | |
| 50 | 37 | 30 | 14 | 27.334.0753.0 | | 27.336.0753.0 | |
| 50 | 42 | 35 | 16 | 27.334.0853.0 | | 27.336.0853.0 | |
| 50 | 47 | 40 | 18 | 27.334.0953.0 | | 27.336.0953.0 | |
| 50 | 52 | 45 | 20 | 27.334.1053.0 | | 27.336.1053.0 | |
| 50 | 57 | 50 | 22 | 27.334.1153.0 | | 27.336.1153.0 | |
| 50 | 62 | 55 | 24 | 27.334.1253.0 | | 27.336.1253.0 | |
| 50 | 67 | 60 | 26 | 27.334.1353.0 | | 27.336.1353.0 | |
| 50 | 72 | 65 | 28 | 27.334.1453.0 | | 27.336.1453.0 | |
| 50 | 77 | 70 | 30 | 27.334.1553.0 | | 27.336.1553.0 | |
| 50 | 82 | 75 | 32 | 27.334.1653.0 | | 27.336.1653.0 | |
| 17 to 24pole upon request | | | | | | | |
| **Spacing: 5.08 mm** | | | | unmarked | | unmarked | |
| 100 | 12.16 | 5.08 | 4 | 27.354.0253.0 | | 27.356.0253.0 | |
| 100 | 17.24 | 10.16 | 6 | 27.354.0353.0 | | 27.356.0353.0 | |
| 50 | 22.32 | 15.24 | 8 | 27.354.0453.0 | | 27.356.0453.0 | |
| 50 | 27.40 | 20.32 | 10 | 27.354.0553.0 | | 27.356.0553.0 | |
| 50 | 32.48 | 25.40 | 12 | 27.354.0653.0 | | 27.356.0653.0 | |
| 50 | 37.56 | 30.48 | 14 | 27.354.0753.0 | | 27.356.0753.0 | |
| 50 | 42.64 | 35.56 | 16 | 27.354.0853.0 | | 27.356.0853.0 | |
| 50 | 47.72 | 40.64 | 18 | 27.354.0953.0 | | 27.356.0953.0 | |
| 50 | 52.80 | 45.72 | 20 | 27.354.1053.0 | | 27.356.1053.0 | |
| 50 | 57.88 | 50.80 | 22 | 27.354.1153.0 | | 27.356.1153.0 | |
| 50 | 62.96 | 55.88 | 24 | 27.354.1253.0 | | 27.356.1253.0 | |
| 50 | 68,04 | 60.96 | 26 | 27.354.1353.0 | | 27.356.1353.0 | |
| 50 | 73.12 | 66.04 | 28 | 27.354.1453.0 | | 27.356.1453.0 | |
| 50 | 78.20 | 71.12 | 30 | 27.354.1553.0 | | 27.356.1553.0 | |
| 50 | 83.28 | 76.20 | 32 | 27.354.1653.0 | | 27.356.1653.0 | |
| 17 to 24pole upon request | | | | | | | |
| | | | | Coding available on request | | Coding available on request | |

# Insulated header for panel mount feed through, Spacing: 5.08 mm

codable

**Wire wrap connection 1 x 1**
Max. pin diameter: 0.8 mm

Rated current: 6.5 A

**Solder eyelets**
Rated cross section:
1.5 mm² solid/
1.0 mm² fine stranded

Rated current: 12 A

**Quick connect tabs** 2.8 x 0.8 DIN 46249
Rated cross section:
1.0 mm² fine stranded

Rated current: 8 A

250 V/4 kV/3 – Overvoltage category III
400 V/4 kV/2 – Overvoltage category II
1000 V/4 kV/1 – Overvoltage category I

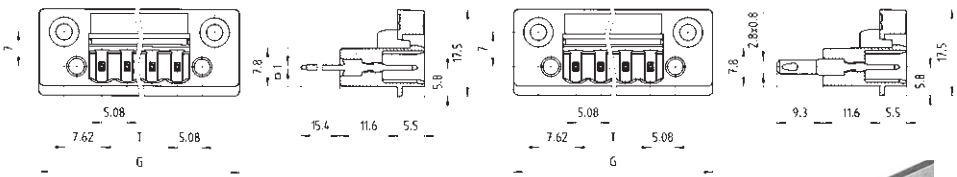


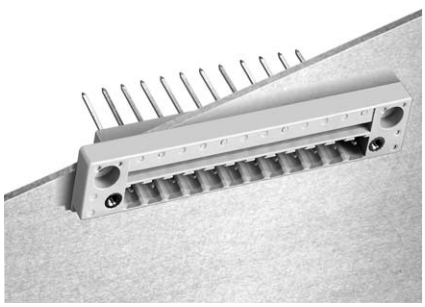

**wire wrap**

**Type 8213 S/... DFWW,**
**8213 S/... DFWW M**

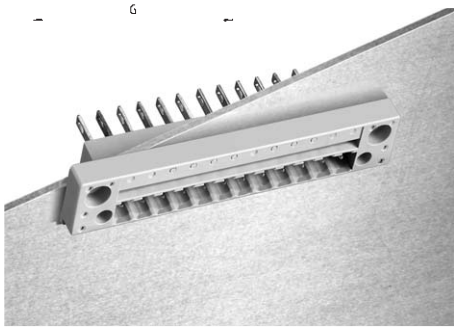

**with solder eyelets / quick connect tabs**

**Type 8213 S/... DFLS,**
**8213 S/... DFLS M**

| | | | |
|---|---|---|---|
| Rated voltages: VDE 0110 | No. 22 – 12 AWG | 300 V | 6.5 A |
| UL ratings | No. 22 – 12 AWG | 300 V | 6.5 A |
| CSA ratings | | | |
| Approvals | | | |

| | | | |
|---|---|---|---|
| No. 22 – 12 AWG | 300 V | 12/8 A |
| No. 22 – 12 AWG | 300 V | 8 A |

| Std. pack | G | T | Poles | Part no. unmarked | Part no. unmarked | Part no. unmarked | Part no. unmarked |
|---|---|---|---|---|---|---|---|
| **Spacing: 5.08 mm** | | | | | | | |
| 100 | 30.48 | 5.08 | 2 | 25.303.0253.0 | 25.313.0253.0 | 25.303.3253.0 | 25.313.3253.0 |
| 100 | 35.56 | 10.16 | 3 | 25.303.0353.0 | 25.313.0353.0 | 25.303.3353.0 | 25.313.3353.0 |
| 50 | 40.64 | 15.24 | 4 | 25.303.0453.0 | 25.313.0453.0 | 25.303.3453.0 | 25.313.3453.0 |
| 50 | 45.72 | 20.32 | 5 | 25.303.0553.0 | 25.313.0553.0 | 25.303.3553.0 | 25.313.3553.0 |
| 50 | 50.80 | 25.40 | 6 | 25.303.0653.0 | 25.313.0653.0 | 25.303.3653.0 | 25.313.3653.0 |
| 50 | 55.88 | 30.48 | 7 | 25.303.0753.0 | 25.313.0753.0 | 25.303.3753.0 | 25.313.3753.0 |
| 50 | 60.96 | 35.56 | 8 | 25.303.0853.0 | 25.313.0853.0 | 25.303.3853.0 | 25.313.3853.0 |
| 50 | 66.04 | 40.64 | 9 | 25.303.0953.0 | 25.313.0953.0 | 25.303.3953.0 | 25.313.3953.0 |
| 50 | 71.12 | 45.72 | 10 | 25.303.1053.0 | 25.313.1053.0 | 25.303.4053.0 | 25.313.4053.0 |
| 50 | 76.20 | 50.80 | 11 | 25.303.1153.0 | 25.313.1153.0 | 25.303.4153.0 | 25.313.4153.0 |
| 50 | 81.28 | 55.88 | 12 | 25.303.1253.0 | 25.313.1253.0 | 25.303.4253.0 | 25.313.4253.0 |
| 50 | 86.36 | 60.96 | 13 | 25.303.1353.0 | 25.313.1353.0 | 25.303.4353.0 | 25.313.4353.0 |
| 50 | 91.44 | 66.04 | 14 | 25.303.1453.0 | 25.313.1453.0 | 25.303.4453.0 | 25.313.4453.0 |
| 50 | 96.52 | 71.12 | 15 | 25.303.1553.0 | 25.313.1553.0 | 25.303.4553.0 | 25.313.4553.0 |
| 50 | 101.60 | 76.20 | 16 | 25.303.1653.0 | 25.313.1653.0 | 25.303.4653.0 | 25.313.4653.0 |
| | | | 17 to 22pole upon request | without screw flange | with screw flange | without screw flange | with screw flange |

**Mounting dimensions**

| a | b | |
|---|---|---|
| 13.18 | 20.32 | 2 |
| 18.26 | 25.40 | 3 |
| 23.34 | 30.48 | 4 |
| 28.42 | 35.56 | 5 |
| 33.50 | 40.64 | 6 |
| 38.58 | 45.72 | 7 |
| 43.66 | 50.80 | 8 |
| 48.74 | 55.08 | 9 |
| 53.82 | 60.96 | 10 |
| 58.90 | 66.04 | 11 |
| 68.98 | 71.12 | 12 |
| 69.06 | 76.20 | 13 |
| 74.14 | 81.28 | 14 |
| 79.22 | 86.36 | 15 |
| 84.30 | 91.44 | 16 |

17 to 24pole upon request

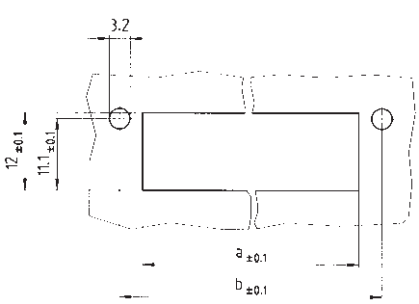


**Accessories:**

| | | | |
|---|---|---|---|
| Coding piece (strip) | 100 | 05.561.0053.0 | 05.561.0053.0 |
| Set of screws | 100 | Z6.012.0812.0 | Z6.012.0812.0 |

wiecon

# Accessories for 8113 – 8413/8813 and 8213 BL

**wiecon** PCB

Bore hole plan for fixing brackets Z5.523.2453.0

Type 8113 SE/... and 8213 SE/...

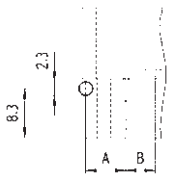


| | A | B |
|---|---|---|
| 8113 | 6.3 | 5.00 |
| 8213 | 6.8 | 5.08 |

Bore hole plan for fixing brackets Z5.523.2453.0

Type 81 – 8413 S/...

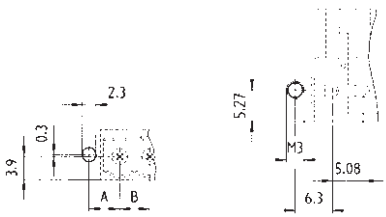


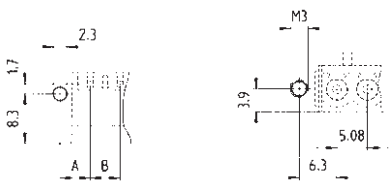


| | A | B |
|---|---|---|
| 8113 | 5.1 | 5.00 |
| 8213 | 5.2 | 5.08 |
| 8313 | 5.4 | 7.50 |
| 8413 | 5.4 | 7.62 |

## 8113 – 8413/8813

| | Part no. | Std. pack |
|---|---|---|
| Fixing brackets (type 8113 – 8413) | Z5.523.2453.0 | 100 |
| End plate for multi-tier header (type 8113 – 8213 SE) | 07.310.9853.0 | 50 |
| Coding strip for – header (type 8113 – 8413, type 8813) | 05.561.0053.0 | 100 |
| – plug (type 8113 – 8413) | 05.561.9153.0 | 100 |

Examples of fixing brackets assembly for insulated headers

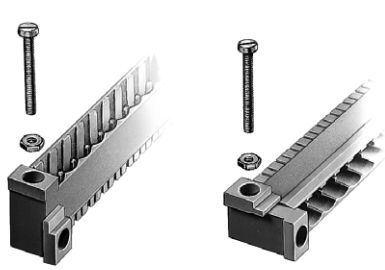

Assembly of fixing brackets with end plate for multi-tier headers

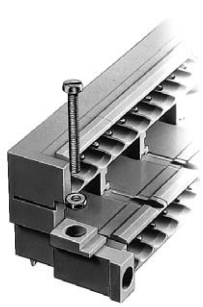

## 8213 BL

Adhesive marking tag strips for plug connectors and insulated headers with 5/5.08 mm spacing

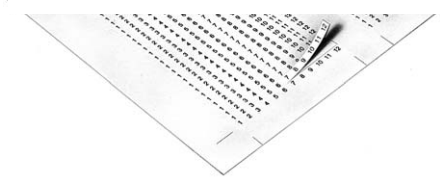

| | Part no. | Std. pack |
|---|---|---|
| 1 – 12 | 04.007.4089.0 | 1 |
| 13 – 24 | 04.007.4189.0 | 1 |
| 25 – 36 | 04.007.4289.0 | 1 |
| 37 – 68 | 04.007.4389.0 | 1 |
| 49 – 60 | 04.007.4489.0 | 1 |
| 61 – 72 | 04.007.4589.0 | 1 |
| 73 – 84 | 04.007.4689.0 | 1 |
| 85 – 96 | 04.007.4789.0 | 1 |
| 97 – 108 | 04.007.4889.0 | 1 |

Fixing brackets

Z5.523.7753.0 100

Z5.523.7853.0 100

wiecon

# Duo feed through DIN rail terminal blocks with connection for PC board pluggables

**wiecon** PCB

**For PC board connectors 8113 BFK**

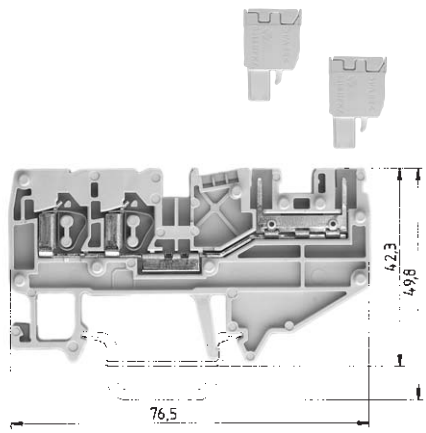


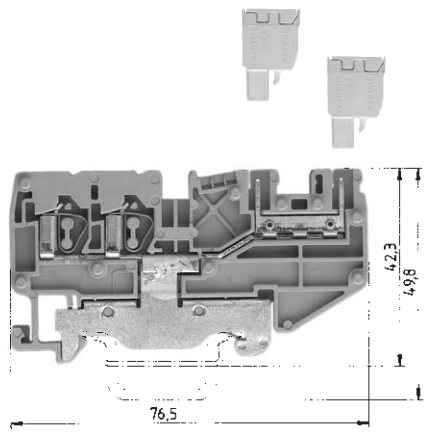


| | | WKF 2.5 D2/8113/35 | | | | WKF 2.5 D2/8113 SL/35 | | | |
|---|---|---|---|---|---|---|---|---|---|
| | | fine stranded | solid | V | A | fine stranded | solid | V | A |
| EN 60 947-7-1/DIN VDE 0611 T1 | | 0.13 – 2.5 mm² | 0.13 – 4 mm² | 250 V/4 kV/3 | 16 | 0.13 – 2.5 mm² | 0.13 – 4 mm² | 250 V/4 kV/3 | 16 |
| UL ratings | field/factory wiring | No. 22 – 12 AWG | | 300 | 15 | No. 22 – 12 AWG | | 300 | |
| CSA ratings | | No. 24 – 12 AWG | | 300 | 15 | No. 24 – 12 AWG | | 300 | |
| Width | Wire strip length | 5 mm | | | 11 mm | 5 mm | | | 11 mm |
| Approvals | | | | | | | | | |

| | | Type | Part no. | Std. pack | Type | Part no. | Std. pack |
|---|---|---|---|---|---|---|---|
| **Duo feed-through terminal block** | Color: gray | WKF 2,5 D2/8113/35 | 56.703.2053.0 | 100 | | | |
| | Color: blue | WKF 2,5 D2/8113/35 BLAU | 56.703.2053.6 | 100 | | | |
| **Duo ground block** | Color: green/yellow | | | | WKF 2,5 D2/8113 SL/35 | 56.703.9253.0 | 100 |
| **Multi-tier block** | Color: gray | | | | | | |
| | | | | | | | |
| **Accessories** | | | | | | | |
| 1. Mounting rail TS 35, DIN rail7.5 high | L = 2 m | 35x27x7,5 EN 50022 | 98.300.0000.0 | 1 | 35x27x7,5 EN 50022 | 98.300.0000.0 | 1 |
| Mounting rail TS 35, DIN rail 15 mm high | L = 2 m | 35x24x15 EN 50022 | 98.360.0000.0 | 1 | 35x24x15 EN 50022 | 98.360.0000.0 | 1 |
| 2. End clamp TS 35, with screw | 8 mm wide | 9708/2 S35 | Z5.522.8553.0 | 100 | 9708/2 S35 | Z5.522.8553.0 | 100 |
| End clamp for TS 35, without screws | 8 mm wide | WEF 1/35 | Z5.523.9353.0 | 100 | WEF 1/35 | Z5.523.9353.0 | 100 |
| 3. End plate | Color: gray | APF 2,5/D2/8113 | 07.312.4153.0 | 10 | APF 2,5/D2/8113 | 07.312.4153.0 | 10 |
| | Color: blue | APF 2,5/D2/8113 | 07.312.4153.6 | 10 | | | |
| 4. Partition plate | Color: gray | | | | | | |
| | Color: blue | | | | | | |
| 5. Cross connector | 2pole | IVB WKF 2,5 – 2 | Z7.280.6227.0 | 10 | | | |
| insulated | 3pole | IVB WKF 2,5 – 3 | Z7.280.6327.0 | 10 | | | |
| | 4pole | IVB WKF 2,5 – 4 | Z7.280.6427.0 | 10 | | | |
| | 5pole | IVB WKF 2,5 – 5 | Z7.280.6527.0 | 10 | | | |
| | 6pole | IVB WKF 2,5 – 6 | Z7.280.6627.0 | 10 | | | |
| | 7pole | IVB WKF 2,5 – 7 | Z7.280.6727.0 | 20 | | | |
| | 8pole | IVB WKF 2,5 – 8 | Z7.280.6827.0 | 20 | | | |
| | 9pole | IVB WKF 2,5 – 9 | Z7.280.6927.0 | 20 | | | |
| | 10pole | IVB WKF 2,5 – 10 | Z7.280.7027.0 | 20 | | | |
| 6. Wire entry guide | 0.13 – 0.2 mm² | LEL 2,5/1 WEISS | 05.561.6553.0 | 100 | LEL 2,5/1 WEISS | 05.561.6553.0 | 100 |
| | 0.25 – 0.5 mm² | LEL 2,5/2 GRAU | 05.561.6653.0 | 100 | LEL 2,5/2 GRAU | 05.561.6653.0 | 100 |
| | 0.75 – 1.0 mm² | LEL 2,5/3 SCHWARZ | 05.561.6753.0 | 100 | LEL 2,5/3 SCHWARZ | 05.561.6753.0 | 100 |
| 7. Cover with warning symbol over 4 blocks | | ADF 2,5/4 GELB | 04.343.6053.8 | 10 | ADF 2,5/4 GELB | 04.343.6053.8 | 10 |
| Pin cover with warning symbol over 4 poles | | AD 8113/4 GELB | 04.343.6853.8 | 10 | AD 8113/4 GELB | 04.343.6853.8 | 10 |
| 8. Screwdriver, uninsulated | | DIN 5264 B 0,6x3,5 | 06.502.4000.0 | 5 | DIN 5264 B 0,6x3,5 | 06.502.4000.0 | 5 |
| 9. Coding piece (strip) | | | 05.561.0053.0 | 100 | | 05.561.0053.0 | 100 |
| 10. Marking accessories | | See ***fasis*** page 36 | | | See ***fasis*** page 36 | | |
| | | | | | | | |
| | | | | | | | |
| | | | | | Note ***fasis*** page 36 ! | | |

# Pluggable PC board connectors
# Spring clamp / rising cage clamp
# Spacing: 5.00 mm

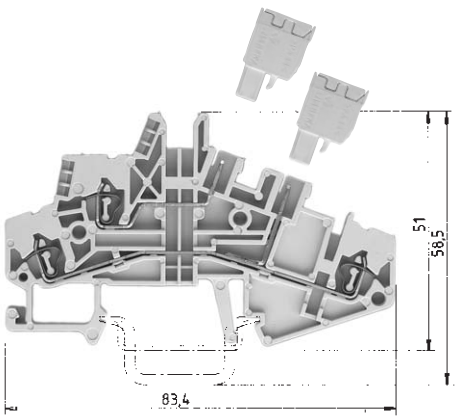


Rated current:
12 A

250 V/4 kV/3 – Overvoltage category III
400 V/4 kV/2 – Overvoltage category II
1000 V/4 kV/1 – Overvoltage category I

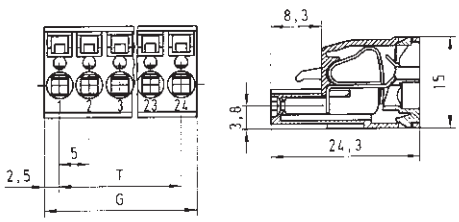


When using ferrules for conductor cross section of 2.5 mm², use only ferrule no. 05.596.6127.0.

See catalog section ***facts*** & DATA pages 796 - 797

## WKF 1.5 E/8113/35

| fine stranded | solid | V | A |
|---|---|---|---|
| 0.13 – 1.5 mm² | 0.13 – 2.5 mm² | 250 V/4 kV/3 | 16 |
| No. 22 – 14 | | | |
| No. 24 – 14 | | | |
| 5 mm | | | 11 mm |
| pending | | | |

Rated voltages: VDE 0110
EN 60 947-7-1/DIN VDE 0611 T1
Spacing: Wire strip length
UL ratings
CSA ratings
Approvals pending

## Type 8113 BFK

| 0.13 – 2.5 mm² fine stranded | 0.13 – 4 mm² solid | |
|---|---|---|
| 11 mm | | 9 mm |
| No. 22 – 12 AWG | 300 V | 12 A |
| No. 22 – 12 AWG | 300 V | 12 A |

| Type | Part no. | Std. pack |
|---|---|---|
| WKF 1,5 E/8113/35 | 56.702.2053.0 | 100 |
| 35x27x7,5 EN 50022 | 98.300.0000.0 | 1 |
| 35x24x15 EN 50022 | 98.360.0000.0 | 1 |
| 9708/2 S35 | Z5.522.8553.0 | 100 |
| WEF 1/35 | Z5.523.9353.0 | 100 |
| APF 1,5/E/8113 | 07.312.4753.0 | 10 |
| IVB WKF 2,5 – 2 | Z7.280.6227.0 | 10 |
| IVB WKF 2,5 – 3 | Z7.280.6327.0 | 10 |
| IVB WKF 2,5 – 4 | Z7.280.6427.0 | 10 |
| IVB WKF 2,5 – 5 | Z7.280.6527.0 | 10 |
| IVB WKF 2,5 – 6 | Z7.280.6627.0 | 10 |
| IVB WKF 2,5 – 7 | Z7.280.6727.0 | 20 |
| IVB WKF 2,5 – 8 | Z7.280.6827.0 | 20 |
| IVB WKF 2,5 – 9 | Z7.280.6927.0 | 20 |
| IVB WKF 2,5 – 10 | Z7.280.7027.0 | 20 |
| LEL 1,5/1 WEISS | 05.562.2453.0 | 100 |
| LEL 1,5/2 GRAU | 05.562.2553.0 | 100 |
| LEL 1,5/3 SCHWARZ | 05.562.2653.0 | 100 |
| ADF 2,5/4 GELB | 04.343.6053.8 | 10 |
| AD 8113/4 GELB | 04.343.6853.8 | 10 |
| DIN 5264 B 0,6x3,5 | 06.502.4000.0 | 5 |
| | 05.561.0053.0 | 100 |

See ***fasis*** page 37

| Spacing: 5.00 mm | Std. pack | G | T | Poles | Part no. unmarked | Part no. marked |
|---|---|---|---|---|---|---|
| | 100 | 10 | 5 | 2 | 25.820.3253.0 | 25.820.0253.0 |
| | 100 | 15 | 10 | 3 | 25.820.3353.0 | 25.820.0353.0 |
| | 50 | 20 | 15 | 4 | 25.820.3453.0 | 25.820.0453.0 |
| | 50 | 25 | 20 | 5 | 25.820.3553.0 | 25.820.0553.0 |
| | 50 | 30 | 25 | 6 | 25.820.3653.0 | 25.820.0653.0 |
| | 50 | 35 | 30 | 7 | 25.820.3753.0 | 25.820.0753.0 |
| | 50 | 40 | 35 | 8 | 25.820.3853.0 | 25.820.0853.0 |
| | 50 | 45 | 40 | 9 | 25.820.3953.0 | 25.820.0953.0 |
| | 50 | 50 | 45 | 10 | 25.820.4053.0 | 25.820.1053.0 |
| | 50 | 55 | 50 | 11 | 25.820.4153.0 | 25.820.1153.0 |
| | 50 | 60 | 55 | 12 | 25.820.4253.0 | 25.820.1253.0 |
| | 50 | 65 | 60 | 13 | 25.820.4353.0 | 25.820.1353.0 |
| | 50 | 70 | 65 | 14 | 25.820.4453.0 | 25.820.1453.0 |
| | 50 | 75 | 70 | 15 | 25.820.4553.0 | 25.820.1553.0 |
| | 50 | 80 | 75 | 16 | 25.820.4653.0 | 25.820.1653.0 |
| | 17 to 24pole upon request | | | | | |

**Accessories:**

| | | |
|---|---|---|
| Coding piece (strip) | 100 | 05.561.9153.0 |
| Screwdriver DIN 5264 B 0.6 x 3.5 | 5 | 06.502.4000.0 |

# Feed through DIN rail terminal blocks with connection for PC board pluggables

## wiecon PCB

For PC board connectors:
– Type 8113 B
– Type 8113 BFK
– Type 8313 B
– Type 8113 B/VL
– Type 8113 B/VR
– Type 8113 B/Top

Indicator: R = 4.7 K; 0.5 W
Signal color: red

[1] for blocks with indicator determined by LED

The part numbers marked with ***) are supplied with UL 94-V0 insulating housings (flammability class).

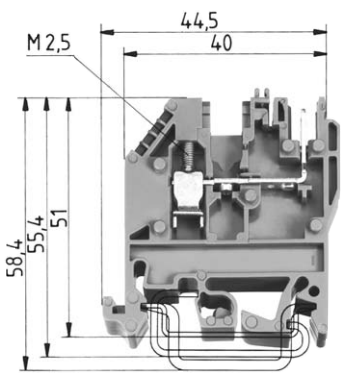


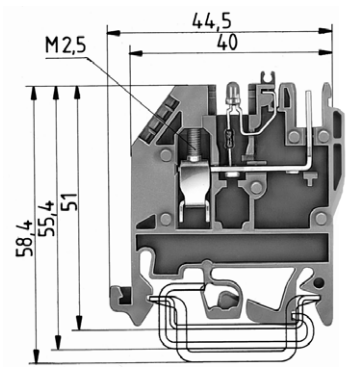


| | WK 2.5 U / 8113 S/V | | | | WK 2.5 U / 8113 S/V / LED 25 | | | |
|---|---|---|---|---|---|---|---|---|
| | fine stranded | solid | V | A | fine stranded | solid | V | A |
| EN 60 947-7-1/DIN VDE 0611 T1 | 0.5 – 2.5 mm² | 0.5 – 4 mm² | 250 V/4 kV/3 | 12 | 0.5 – 2.5 mm² | 0.5 – 4 mm² | [1] | 12 |
| UL ratings | No. 22 – 12 | AWG | 300 V | 15 | No. 22 – 12 | AWG | 300 V | 15 |
| CSA ratings | No. 24 – 12 | AWG | 300 V | 15 | No. 24 – 12 | AWG | 25 V [1] | 15 |
| Width | 5 mm | | | 9 mm | 5 mm | | | 9 mm |
| Wire strip length | | | | | | | | |
| Approvals | | | | | | | | |

| | | Type | Part no. | Std. pack | Type | Part no. | Std. pack |
|---|---|---|---|---|---|---|---|
| Feed through block | Color: gray | WK 2,5 U/8113 S/V...***) | 57.503.2655.6 | 50 | | | |
| Feed through block with LED 25 V | Color: gray | | | | WK 2,5 U/8113 S/V/LED 25***) | 57.503.2755.0 | 50 |
| Feed-through block with LED 50 V | Color: gray | | | | | | |
| Power supply block | Color: blue | | | | | | |
| Feed through blocks with header connection | | | | | | | |
| For insulated headers type 8113 see page 297 | | | | | | | |
| | | | | | | | |
| **Accessories** | | | | | | | |
| Mounting rail TS35 Din rail 7.5 mm high | L = 2 m | | | | | | |
| Mounting rail TS 35, DIN rail, 15mm high | L = 2 m | | | | | | |
| Mounting rail 32 G rail | L = 2 m | | | | | | |
| End clamp with U foot | 10 mm wide | | | | | | |
| End clamp TS 35 with screw | 8 mm wide | | | | | | |
| End clamp TS 32 with screw | 7.5 mm wide | | | | | | |
| End plate for right side 2.5 mm thick | Color: gray | AP 2,5 U/8113 S/V ***) | 07.312.1555.0 | 10 | AP 2,5 U/8113 S/V ***) | 07.312.1555.0 | 10 |
| End plate for left side, 2.5 mm thick | Color: gray | AP 2,5 U/8113 ***) | 07.312.4655.0 | 10 | AP 2,5 U/8113 ***) | 07.312.4655.0 | 10 |
| End plate, 2.5 mm thick | Color: blue | | | | | | |
| Partition, right side, 2.5 mm thick | Color: gray | ZP 2,5 U/8113 S/V | 07.312.1655.0 | 10 | ZP 2,5 U/8113 S/V | 07.312.1655.0 | 10 |
| Partition, 2.5 mm thick | Color: blue | | | | | | |
| (for PC board headers in 7.5 mm spacing) | | | | | | | |
| | | | | | | | |
| Cross connector with screws, E-Cu | insulated | | | | | | |
| | 2pole | IVB WK 2,5-2 | Z7.280.2227.0 | 10 | IVB WK 2,5-2 | Z7.280.2227.0 | 10 |
| | 3pole | IVB WK 2,5-3 | Z7.280.2327.0 | 10 | IVB WK 2,5-3 | Z7.280.2327.0 | 10 |
| | up to 12pole | IVB WK 2,5-12 | Z7.280.3227.0 | 10 | IVB WK 2,5-12 | Z7.280.3227.0 | 10 |
| Jumper rail, tin-plated brass | L = 0.4 m | | 05.561.4125.0 | 1 | | 05.561.4125.0 | 1 |
| | | | | | | | |
| Single cover for cross connector with marking capabil. | | ADVB 2,5 GELB | 04.326.2053.0 | | ADVB 2,5 GELB | 04.326.2053.0 | |
| Cover strip for header | 24pole | | 04.343.9056.0 | | | 04.343.9056.0 | |
| Cover for header with warning symbol | | | 04.343.9156.0 | | | 04.343.9156.0 | |
| Partition plate | | TS 2,5 GELB | 07.311.2053.0 | | TS 2,5 GELB | 07.311.2053.0 | |
| Coding piece (strip) | | | 05.561.0053.0 | | | 05.561.0053.0 | 100 |
| locking piece | 10pole | | | | | | |
| For marking accessories see page 394 | | | | | | | |

Indicator: R = 10 K; 0.5 W
Signal color: red

[1] for blocks with indicator determined by LED

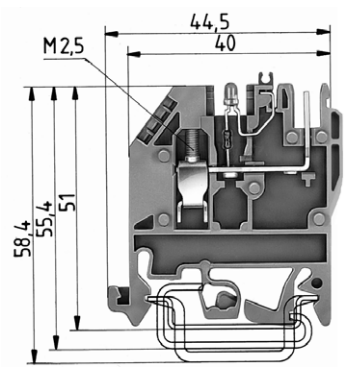


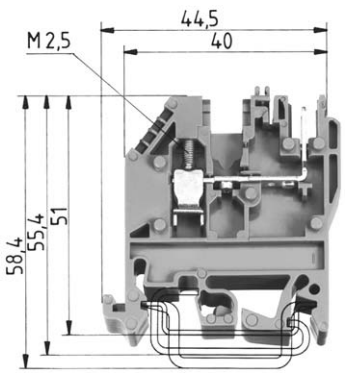


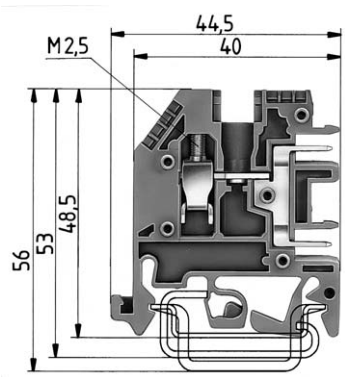


## WK 2.5 U / 8113 S/V / LED 50

| fine stranded | solid | V | A |
|---|---|---|---|
| 0.5 – 2.5 mm² | 0.5 – 4 mm² | [1] | 12 |
| No. 22 – 12 | AWG | 300 V | 15 |
| No. 24 – 12 | AWG | 50 V [1] | 15 |
| 5 mm | | | 9 mm |

| Type | Part no. | Std. pack |
|---|---|---|
| WK 2,5 U/8113 S/V/LED 50***) | 57.503.2855.0 | 50 |
| AP 2,5 U/8113 S/V ***) | 07.312.1555.0 | 10 |
| AP 2,5 U/8113 ***) | 07.312.4655.0 | 10 |
| ZP 2,5 U/8113 S/V | 07.312.1655.0 | 10 |
| IVB WK 2,5-2 | Z7.280.2227.0 | 10 |
| IVB WK 2,5-3 | Z7.280.2327.0 | 10 |
| IVB WK 2,5-12 | Z7.280.3227.0 | 10 |
| | 05.561.4125.0 | 1 |
| ADVB 2,5 GELB | 04.326.2053.0 | |
| | 04.343.9056.0 | |
| | 04.343.9156.0 | |
| TS 2,5 GELB | 07.311.2053.0 | |
| | 05.561.0053.0 | 100 |

## WK 2.5 U / 8113 S/V /VK

| fine stranded | solid | V | A |
|---|---|---|---|
| 0.5 – 2.5 mm² | 0.5 – 4 mm² | 250 V/4 kV/3 | 12 |
| No. 22 – 12 | AWG | 300 V | 15 |
| No. 24 – 12 | AWG | 300 V | 15 |
| 5 mm | | | 9 mm |

| Type | Part no. | Std. pack |
|---|---|---|
| WK 2,5 U/8113 S/V/VK***) | 57.503.3055.6 | 100 |
| AP 2,5 U/8113 ***) | 07.312.4655.0 | 10 |
| AP 2,5 U/8113 S/V BL***) | 07.312.1555.0 | 10 |
| ZP 2,5 U/8113 S/V | 07.312.1655.0 | 10 |
| ZP 2,5 U/8113 S/V BL | 07.312.1655.6 | 10 |
| IVB WK 2,5-2 | Z7.280.2227.0 | 10 |
| IVB WK 2,5-3 | Z7.280.2327.0 | 10 |
| IVB WK 2,5-12 | Z7.280.3227.0 | 10 |
| | 05.561.4125.0 | 1 |
| ADVB 2,5 GELB | 04.326.2053.0 | |
| | 04.343.9056.0 | |
| | 04.343.9156.0 | |
| TS 2,5 GELB | 07.311.2053.0 | |
| | 05.561.0053.0 | 100 |

## WK 2.5 U / 8113 S/H

| fine stranded | solid | V | A |
|---|---|---|---|
| 0.5 – 2.5 mm² | 0.5 – 4 mm² | 250 V/4 kV/3 | 12 |
| No. 22 – 12 | AWG | 300 V | 20 |
| No. 24 – 12 | AWG | 300 V | 15 |
| 5 mm | | | 9 mm |

| Type | Part no. | Std. pack |
|---|---|---|
| WK 2,5 U/8113 S/H***) | 57.503.2055.0 | 100 |
| AP 2,5 U/8113 S/H ***) | 07.311.9855.0 | 10 |
| IVB WK 2,5-2 | Z7.280.2227.0 | 10 |
| IVB WK 2,5-3 | Z7.280.2327.0 | 10 |
| IVB WK 2,5-12 | Z7.280.3227.0 | 10 |
| | 05.561.4125.0 | 1 |
| ADVB 2,5 GELB | 04.326.2053.0 | |
| | 04.343.9056.0 | |
| | 04.343.9156.0 | |
| TS 2,5 GELB | 07.311.2053.0 | |
| | 05.584.0053.0 | 100 |
| | 05.576.5853.0 | 25 |

# Feed through DIN rail terminal blocks with connection for PC board pluggables

## wiecon PCB

For PC board connectors:
– Type 8113 B
– Type 8113 BFK
– Type 8313 B
– Type 8113 B/VL
– Type 8113 B/VR
– Type 8113 B/Top

Indicator: R = 4.7 K; 0.5 W
Signal color: red

[1] for blocks with indicator determined by LED

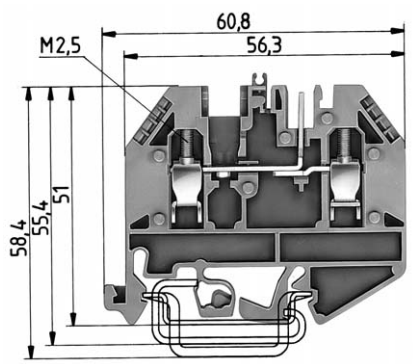


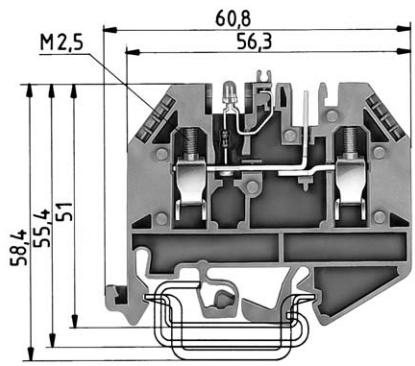


The part numbers marked with ***) are supplied with UL 94-V0 insulating housings (flammability class).

| | | WK 2.5 U /D/ 8113 S/V | | | | WK 2.5 U /D/ 8113 S/V / LED 25 | | | |
|---|---|---|---|---|---|---|---|---|---|
| | | fine stranded | solid | V | A | fine stranded | solid | V | A |
| EN 60 947-7-1/DIN VDE 0611 T1 | | 0.5 – 2.5 mm² | 0.5 – 4 mm² | 250 V/4 kV/3 | 12 | 0.5 – 2.5 mm² | 0.5 – 4 mm² | [1] | 12 |
| UL ratings | | No. 22 – 12 | AWG | 300 V | 15 | No. 22 – 12 | AWG | 300 V | 15 |
| CSA ratings | | No. 24 – 12 | AWG | 300 V | 15 | No. 24 – 12 | AWG | 25 V [1] | 15 |
| Width | Wire strip length | 5 mm | | | 9 mm | 5 mm | | | 9 mm |
| Approvals | | | | | | | | | |

| | | Type | Part no. | Std. pack | Type | Part no. | Std. pack |
|---|---|---|---|---|---|---|---|
| Feed through block | Color: gray | WK 2,5 U/D/8113 S/V...***) | 57.503.2155.0 | 50 | | | |
| Feed through block with LED 25 V | Color: gray | | | | WK 2,5 U/D/8113 S/V/LED 25***) | 57.503.2255.0 | 50 |
| Feed-through block with LED 50 V | Color: gray | | | | | | |
| Power supply block | Color: blau | | | | | | |
| Feed through block with header connection | | | | | | | |
| For insulated headers type 8113 see page 297 | | | | | | | |
| | | | | | | | |
| | | | | | | | |
| **Accessories** | | | | | | | |
| Mounting rail TS 35 DIN rail 7.5 mm high | L = 2 m | | | | | | |
| Mounting rail TS 35, DIN rail, 15mm high | L = 2 m | | | | | | |
| Mounting rail 32 G rail | L = 2 m | | | | | | |
| End clamp with U foot | 10 mm wide | | | | | | |
| End clamp TS 35 with screw | 8 mm wide | | | | | | |
| End clamp TS 32 with screw | 7.5 mm wide | | | | | | |
| End plate, 2.5 mm thick | Color: gray | AP 2,5 U/D/8113 S/V ***) | 07.311.9055.0 | 10 | AP 2,5 U/D/8113 S/V***) | 07.311.9055.0 | 10 |
| End plate, 2.5 mm thick | Color: blue | | | | | | |
| Partition, 2.5 mm thick | Color: gray | ZP 2,5 U/D/8113 S/V | 07.311.9155.0 | 10 | ZP 2,5 U/D/8113 S/V | 07.311.9155.0 | 10 |
| Partition, 2.5 mm thick | Color: blue | | | | | | |
| (for PC board headers in 7.5 mm spacing) | | | | | | | |
| | | | | | | | |
| Cross connector with screws, E-Cu | insulated | | | | | | |
| | 2pole | IVB WK 2,5-2 | Z7.280.2227.0 | 10 | IVB WK 2,5-2 | Z7.280.2227.0 | 10 |
| | 3pole | IVB WK 2,5-3 | Z7.280.2327.0 | 10 | IVB WK 2,5-3 | Z7.280.2327.0 | 10 |
| | up to 12pole | IVB WK 2,5-12 | Z7.280.3227.0 | 10 | IVB WK 2,5-12 | Z7.280.3227.0 | 10 |
| Jumper rail, tin-plated brass | L = 0.4 m | | 05.561.4125.0 | 1 | | 05.561.4125.0 | 1 |
| Cover strip for LED (transparent) | | ADVB 5/10 P | 04.342.3556.8 | 10 | ADVB 5/10 P | 04.342.3556.8 | 10 |
| Single cover for cross connector with marking capabil. | | ADVB 2,5 GELB | 04.326.2053.8 | 10 | ADVB 2,5 GELB | 04.326.2053.8 | 10 |
| Cover strip for header | 24pole | | 04.343.9056.8 | 10 | | 04.343.9056.8 | 10 |
| Cover strip for header with warning symbol | 24pole | | 04.343.9156.8 | 10 | | 04.343.9156.8 | 10 |
| Partition plate | | TS 2,5 GELB | 07.311.2053.8 | 10 | TS 2,5 GELB | 07.311.2053.8 | 10 |
| Coding piece (strip) | | | 05.561.0053.0 | 100 | | 05.561.0053.0 | 100 |
| | | | | | | | |
| For marking accessories see page 394 | | | | | | | |

Indicator: R = 10 K; 0.5 W
Signal color: red

[1] for blocks with indicator determined by LED

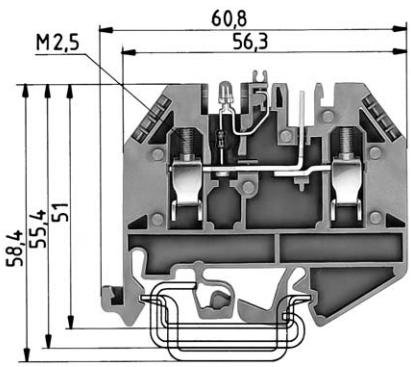


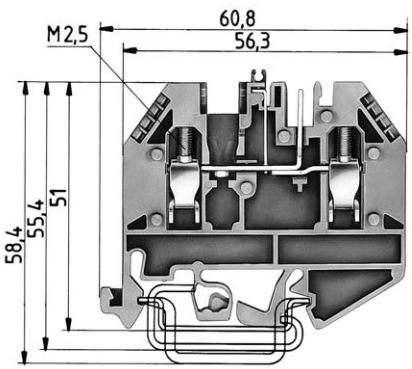


## WK 2.5 U /D/ 8113 S/V / LED 50

| fine stranded | solid | V | A |
|---|---|---|---|
| 0.5 – 2.5 mm² | 0.5 – 4 mm² | [1] | 12 |
| No. 22 – 12 | AWG | 300 V | 15 |
| No. 24 – 12 | AWG | 50 V [1] | 15 |
| 5 mm | | | 9 mm |

## WK 2.5 U /D/ 8113 S/V /VK

| fine stranded | solid | V | A |
|---|---|---|---|
| 0.5 – 2.5 mm² | 0.5 – 4 mm² | 250 V/4 kV/3 | 12 |
| No. 22 – 12 | AWG | 300 V | 15 |
| No. 24 – 12 | AWG | 300 V | 15 |
| 5 mm | | | 9 mm |

| Type | Part no. | Std. pack | Type | Part no. | Std. pack |
|---|---|---|---|---|---|
| WK 2,5 U/D/8113 S/V/LED 50***) | 57.503.2355.0 | 50 | | | |
| | | | WK 2,5 U/D/8113 S/V/VK***) | 57.503.2555.6 | 50 |
| AP 2,5 U/D/8113 S/V ***) | 07.311.9055.0 | 10 | | | |
| | | | AP 2,5 U/D/8113 S/V BL***) | 07.311.9055.6 | 10 |
| ZP 2,5 U/D/8113 S/V | 07.311.9155.0 | 10 | | | |
| | | | ZP 2,5 U/D/8113 S/V BL | 07.311.9155.6 | 10 |
| IVB WK 2,5-2 | Z7.280.2227.0 | 10 | IVB WK 2,5-2 | Z7.280.2227.0 | 10 |
| IVB WK 2,5-3 | Z7.280.2327.0 | 10 | IVB WK 2,5-3 | Z7.280.2327.0 | 10 |
| IVB WK 2,5-12 | Z7.280.3227.0 | 10 | IVB WK 2,5-12 | Z7.280.3227.0 | 10 |
| | 05.561.4125.0 | 1 | | 05.561.4125.0 | 1 |
| ADVB 5/10 P | 04.342.3556.8 | 10 | ADVB 5/10 P | 04.342.3556.8 | 10 |
| ADVB 2,5 GELB | 04.326.2053.8 | 10 | ADVB 2,5 GELB | 04.326.2053.8 | 10 |
| | 04.343.9056.8 | 10 | | 04.343.9056.8 | 10 |
| | 04.343.9156.8 | 10 | | 04.343.9156.8 | 10 |
| TS 2,5 GELB | 07.311.2053.8 | 10 | TS 2,5 GELB | 07.311.2053.8 | 10 |
| | 05.561.0053.0 | 100 | | 05.561.0053.0 | 100 |

# Pluggable PC board connectors with pin-strip headers

## wiecon PCB

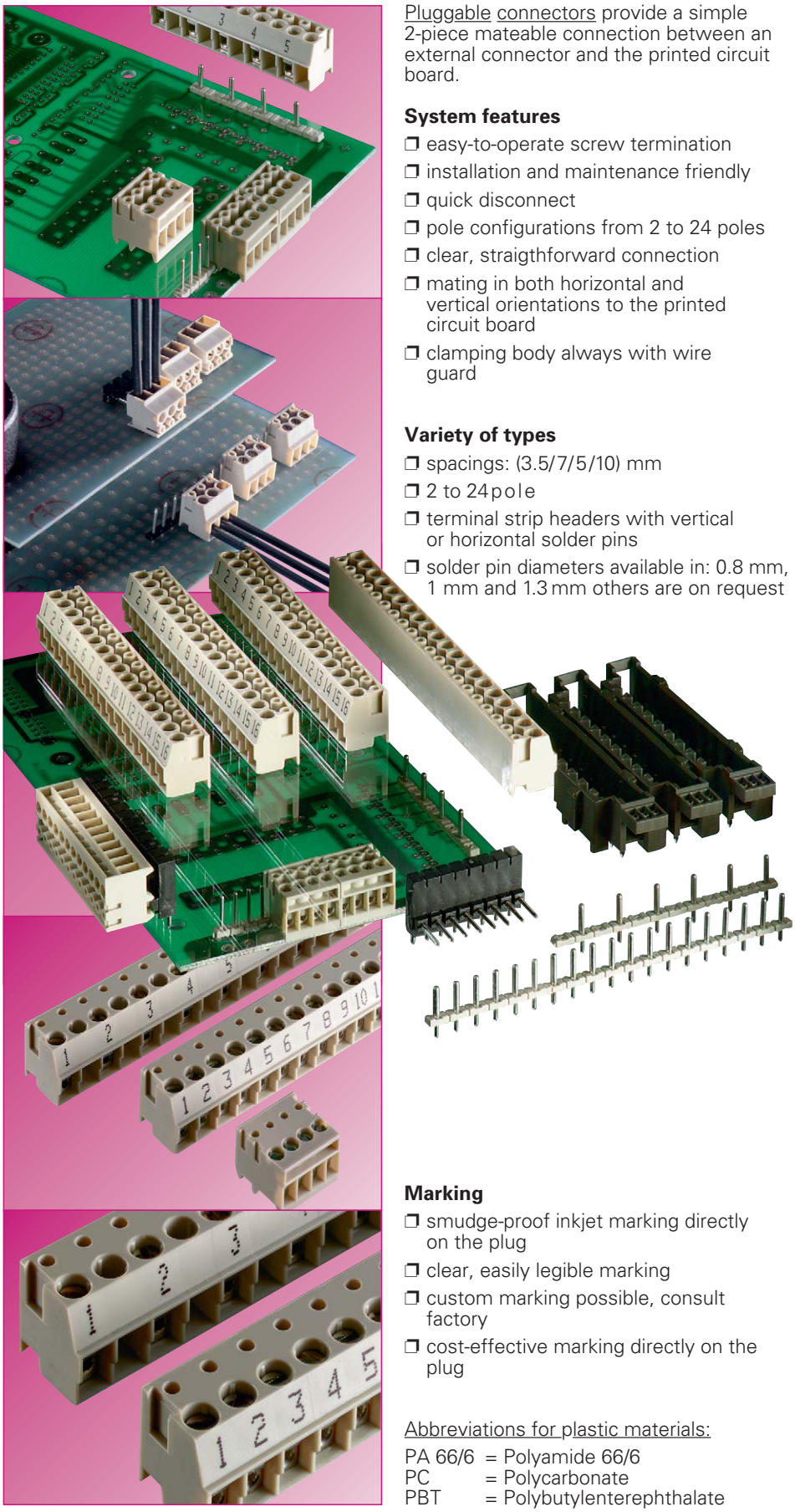

Pluggable connectors provide a simple 2-piece mateable connection between an external connector and the printed circuit board.

### System features

- ❒ easy-to-operate screw termination
- ❒ installation and maintenance friendly
- ❒ quick disconnect
- ❒ pole configurations from 2 to 24 poles
- ❒ clear, straigthforward connection
- ❒ mating in both horizontal and vertical orientations to the printed circuit board
- ❒ clamping body always with wire guard

### Variety of types

- ❒ spacings: (3.5/7/5/10) mm
- ❒ 2 to 24pole
- ❒ terminal strip headers with vertical or horizontal solder pins
- ❒ solder pin diameters available in: 0.8 mm, 1 mm and 1.3 mm others are on request

### Marking

- ❒ smudge-proof inkjet marking directly on the plug
- ❒ clear, easily legible marking
- ❒ custom marking possible, consult factory
- ❒ cost-effective marking directly on the plug

Abbreviations for plastic materials:

PA 66/6 = Polyamide 66/6
PC = Polycarbonate
PBT = Polybutylenterephthalate

### Material

Insulating housings:

- ❒ use of high-quality polycarbonate for its excellent electrical, mechanical and chemical characteristics (see ***facts*** & DATA)

Metal parts:

- ❒ made of special alloys and/or special surface platings

- ❒ minimum feed through resistance
- ❒ high corrosion resistance
- ❒ secure, consistent clamping function
- ❒ clamping body: nickel-plated brass
- ❒ clamping screw: steel, zinc-plated and dichromated
- ❒ plug contact of type 8142 and ST 29: tin-plated bronze
  plug contact of type 8543: nickel-plated brass
- ❒ wire guard: tin-plated bronze

Pin-strip headers:

- ❒ Insulating part: made from high-quality Polyamide 66/6
- ❒ glass-fibre reinforcement for dimensional stability
- ❒ Metal parts:
  contact pin: tin plated brass

### Note:

The information regarding cross sectional areas and connection types pertains to connections without ferrules.

The indicated rated current pertains to the maximum load of the PC board connector with a connected wire of the indicated rated cross section.

The rated voltage is indicated as per DIN VDE 0110 part 1 (IEC 60 664-1) – insulation coordination for electrical material in low voltage application – and refers to the delivered state of the PC board connector.

Before the PC board is fitted with connectors, an appropriate PC board must be selected and dimensioned accordingly (e.g. regarding tracking resistance of the printed circuit board, distances of the leads and solder joints). Furthermore, the ambient conditions under which the device is to be used (pollution degree) must be considered.

The indicated rated voltages will be valid for the complete module only if the printed circuit board and its connectors are correctly and carefully matched to each other.

# wiecon

| | | Page 316 | Page 318 | Page 320 |
|---|---|---|---|---|
| | | 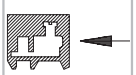 | | |
| **Type** | | **8543** | **8142** | **ST 29** |
| **Spacing** | **mm** | **3.50/7.00** | **5.00/10.00** | **5.08** |
| **Cross section** | **mm²** | **1** | **2.5** | **1.5** |
| **Number of poles** | | **2 – 24** | **2 – 24** | **10** |



IERTES
O 9001
SSICHERUNGSSYSTEM
-Nr. 14 194-02

# PC board connectors
# pluggable, spacings: 3.50/7.00 mm

**wiecon** PCB

Rated cross section:
1.0 mm²

Rated current:
6 A

Connection range:
0.14 – 1.5 mm² solid/
0.14 – 1.0 mm² fine stranded

160 V/2.5 kV/3 – Overvoltage category III
250 V/2.5 kV/2 – Overvoltage category II
*690 V/2.5 kV/1 – Overvoltage category I

* max. 600 V for ungrounded networks or expected overvoltage ≤ 3 kV for L ≥ 2.0 mm and ≤ 2.5 kV for 2.0 mm > L ≥ 1.5 mm

**Spacing: 3.50 mm**

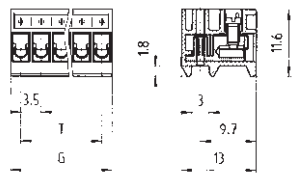

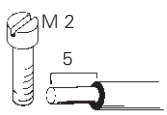


**Spacing: 3.50 mm**

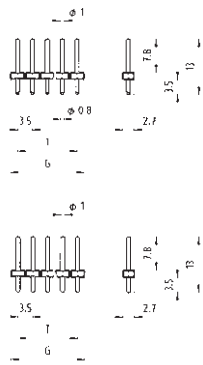

Color: gray
Solder pin Ø 0.8 mm
Bore hole Ø 1.0 mm

Color: black
Solder pin Ø 1.0 mm
Bore hole Ø 1.3 mm

**Type 8543**
plug-in 90° to wire entry

**Terminal strip header**
vertical mount

| | | | |
|---|---|---|---|
| Rated voltages: VDE 0110 (spacing: 3.5 mm) | | | |
| UL ratings | No. 22 – 16 AWG | 300 V | 10 A |
| CSA ratings | No. 22 – 16 AWG | 300 V | 10 A |
| Approvals | | | |

| Std. pack | G | T | Poles | Part no. unmarked | Part no. marked | Part no. Color: gray | Part no. Color: black |
|---|---|---|---|---|---|---|---|
| **Spacing: 3.50 mm** | | | | | | | |
| 100 | 7.0 | 3.5 | 2 | 25.602.5253.0 | 25.600.5253.0 | Z5.531.0225.0 | Z5.531.3225.0 |
| 100 | 10.5 | 7.0 | 3 | 25.602.5353.0 | 25.600.5353.0 | Z5.531.0325.0 | Z5.531.3325.0 |
| 50 | 14.0 | 10.5 | 4 | 25.602.5453.0 | 25.600.5453.0 | Z5.531.0425.0 | Z5.531.3425.0 |
| 50 | 17.5 | 14.0 | 5 | 25.602.5553.0 | 25.600.5553.0 | Z5.531.0525.0 | Z5.531.3525.0 |
| 50 | 21.0 | 17.5 | 6 | 25.602.5653.0 | 25.600.5653.0 | Z5.531.0625.0 | Z5.531.3625.0 |
| 50 | 24.5 | 21.0 | 7 | 25.602.5753.0 | 25.600.5753.0 | Z5.531.0725.0 | Z5.531.3725.0 |
| 50 | 28.0 | 24.5 | 8 | 25.602.5853.0 | 25.600.5853.0 | Z5.531.0825.0 | Z5.531.3825.0 |
| 50 | 31.5 | 28.0 | 9 | 25.602.5953.0 | 25.600.5953.0 | Z5.531.0925.0 | Z5.531.3925.0 |
| 50 | 35.0 | 31.5 | 10 | 25.602.6053.0 | 25.600.6053.0 | Z5.531.1025.0 | Z5.531.4025.0 |
| 50 | 38.5 | 35.0 | 11 | 25.602.6153.0 | 25.600.6153.0 | Z5.531.1125.0 | Z5.531.4125.0 |
| 50 | 42.0 | 38.5 | 12 | 25.602.6253.0 | 25.600.6253.0 | Z5.531.1225.0 | Z5.531.4225.0 |
| 50 | 45.5 | 42.0 | 13 | 25.602.6353.0 | 25.600.6353.0 | Z5.531.1325.0 | Z5.531.4325.0 |
| 50 | 49.0 | 45.5 | 14 | 25.602.6453.0 | 25.600.6453.0 | Z5.531.1425.0 | Z5.531.4425.0 |
| 50 | 52.5 | 49.0 | 15 | 25.602.6553.0 | 25.600.6553.0 | Z5.531.1525.0 | Z5.531.4525.0 |
| 50 | 56.0 | 52.5 | 16 | 25.602.6653.0 | 25.600.6653.0 | Z5.531.1625.0 | Z5.531.4625.0 |
| | | | 17 to 24pole upon request | | | | |
| **Spacing: 7.00 mm** | | | upon request | | | | |

Rated voltages:
(spacing: 7 mm): VDE 0110

400 V/6 kV/3 – Overvoltage category III
690 V/6 kV/2 – Overvoltage category II
1000 V/6 kV/1 – Overvoltage category I

Material:
**PC board connectors**
Insulating housing: PC gray, UL 94-V-0
Clamping body with female contact:
tin-plated brass
Clamping screw: zinc-plated steel
Wire protection: tin-plated bronze

**Terminal strip header**
Insulating part: PA 66/6, glass-fibre reinforced
gray or black, UL 94-V-0
Contact pin: tin-plated brass

**Spacing: 3.50 mm**

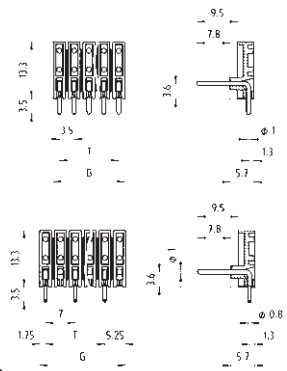


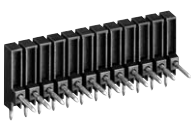

Color: black
Solder pin Ø 0.8 mm
Bore hole Ø 1.0 mm

Color: black
Solder pin Ø 1.0 mm
Bore hole Ø 1.3 mm

## Terminal strip header

horizontal mount

| Part no. | Part no. |
|---|---|
| Color: black | Color: black |
| Z5.532.0225.0<br>Z5.532.0325.0<br>Z5.532.0425.0 | Z5.532.3225.0<br>Z5.532.3325.0<br>Z5.532.3425.0 |
| Z5.532.0525.0<br>Z5.532.0625.0<br>Z5.532.0725.0 | Z5.532.3525.0<br>Z5.532.3625.0<br>Z5.532.3725.0 |
| Z5.532.0825.0<br>Z5.532.0925.0<br>Z5.532.1025.0 | Z5.532.3825.0<br>Z5.532.3925.0<br>Z5.532.4025.0 |
| Z5.532.1125.0<br>Z5.532.1225.0<br>Z5.532.1325.0 | Z5.532.4125.0<br>Z5.532.4225.0<br>Z5.532.4325.0 |
| Z5.532.1425.0<br>Z5.532.1525.0<br>Z5.532.1625.0 | Z5.532.4425.0<br>Z5.532.4525.0<br>Z5.532.4625.0 |

# PC board connectors
# pluggable, spacings: 5.00/10.00 mm

**wiecon** PCB

Rated cross section:
2.5 mm²

Rated current:
8 A

Connection range:
0.14 – 4.0 mm² solid/
0.14 – 2.5 mm² fine stranded

200 V/4 kV/3 – Overvoltage category III
250 V/4 kV/2 – Overvoltage category II
1000 V/4 kV/1 – Overvoltage category I

**Spacing: 5.00 mm**

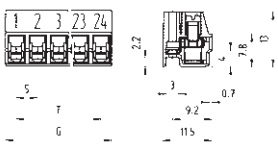

**Spacing: 10.00 mm**

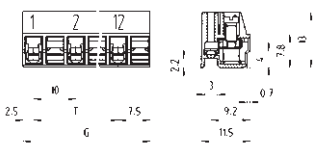

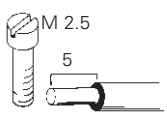


**Type 8142**
plug-in 90° to wire entry

**Spacing: 5.00 mm**

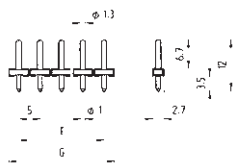

**Spacing: 10.00 mm**

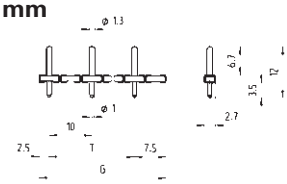

Color: gray
Solder pin Ø 1.0 mm
Bore hole Ø 1.3 mm

Color: black
Solder pin Ø 1.3 mm
Bore hole Ø 1.6 mm

**Terminal strip header**
vertical mount

Rated voltages: VDE 0110 (spacing 5 mm)

| | | | |
|---|---|---|---|
| UL ratings | No. 22 – 12 AWG | 300 V | 15 A |
| CSA ratings | No. 22 – 12 AWG | 300 V | 15 A |
| Approvals | | | |

| Std. pack | G | T | Poles | Part no. unmarked | Part no. marked | Part no. Color: gray | Part no. Color: black |
|---|---|---|---|---|---|---|---|
| **Spacing: 5.00 mm** | | | | | | | |
| 100 | 10 | 5 | 2 | 25.602.2253.0 | 25.600.2253.0 | Z5.530.0225.0 | Z5.530.3225.0 |
| 100 | 15 | 10 | 3 | 25.602.2353.0 | 25.600.2353.0 | Z5.530.0325.0 | Z5.530.3325.0 |
| 50 | 20 | 15 | 4 | 25.602.2453.0 | 25.600.2453.0 | Z5.530.0425.0 | Z5.530.3425.0 |
| 50 | 25 | 20 | 5 | 25.602.2553.0 | 25.600.2553.0 | Z5.530.0525.0 | Z5.530.3525.0 |
| 50 | 30 | 25 | 6 | 25.602.2653.0 | 25.600.2653.0 | Z5.530.0625.0 | Z5.530.3625.0 |
| 50 | 35 | 30 | 7 | 25.602.2753.0 | 25.600.2753.0 | Z5.530.0725.0 | Z5.530.3725.0 |
| 50 | 40 | 35 | 8 | 25.602.2853.0 | 25.600.2853.0 | Z5.530.0825.0 | Z5.530.3825.0 |
| 50 | 45 | 40 | 9 | 25.602.2953.0 | 25.600.2953.0 | Z5.530.0925.0 | Z5.530.3925.0 |
| 50 | 50 | 45 | 10 | 25.602.3053.0 | 25.600.3053.0 | Z5.530.1025.0 | Z5.530.4025.0 |
| 50 | 55 | 50 | 11 | 25.602.3153.0 | 25.600.3153.0 | Z5.530.1125.0 | Z5.530.4125.0 |
| 50 | 60 | 55 | 12 | 25.602.3253.0 | 25.600.3253.0 | Z5.530.1225.0 | Z5.530.4225.0 |
| 50 | 65 | 60 | 13 | 25.602.3353.0 | 25.600.3353.0 | Z5.530.1325.0 | Z5.530.4325.0 |
| 50 | 70 | 65 | 14 | 25.602.3453.0 | 25.600.3453.0 | Z5.530.1425.0 | Z5.530.4425.0 |
| 50 | 75 | 70 | 15 | 25.602.3553.0 | 25.600.3553.0 | Z5.530.1525.0 | Z5.530.4525.0 |
| 50 | 80 | 75 | 16 | 25.602.3653.0 | 25.600.3653.0 | Z5.530.1625.0 | Z5.530.4625.0 |
| 17 to 24pole upon request | | | | | | | |
| **Spacing: 10.00 mm** | | | | unmarked | marked | | |
| 50 | 20 | 10 | 2 | 25.603.1253.0 | 25.601.1253.0 | Z5.530.6225.0 | Z5.530.8225.0 |
| 50 | 30 | 20 | 3 | 25.603.1353.0 | 25.601.1353.0 | Z5.530.6325.0 | Z5.530.8325.0 |
| 50 | 40 | 30 | 4 | 25.603.1453.0 | 25.601.1453.0 | Z5.530.6425.0 | Z5.530.8425.0 |
| 50 | 50 | 40 | 5 | 25.603.1553.0 | 25.601.1553.0 | Z5.530.6525.0 | Z5.530.8525.0 |
| 50 | 60 | 50 | 6 | 25.603.1653.0 | 25.601.1653.0 | Z5.530.6625.0 | Z5.530.8625.0 |
| 50 | 70 | 60 | 7 | 25.603.1753.0 | 25.601.1753.0 | Z5.530.6725.0 | Z5.530.8725.0 |
| 50 | 80 | 70 | 8 | 25.603.1853.0 | 25.601.1853.0 | Z5.530.6825.0 | Z5.530.8825.0 |
| 9 to 12pole upon request | | | | | | | |

Rated voltages:
(spacing: 10.00 mm): VDE 0110

500 V/8 kV/3 – Overvoltage category III
800 V/8 kV/2 – Overvoltage category II
1000 V/8 kV/1 – Overvoltage category I

Material:
**PC board connectors**
Insulating housing: PC gray, UL 94-V-0
Clamping body: nickel-plated brass
Clamping screws: zinc-plated steel
Contact spring: tin-plated bronze

**Terminal strip header**
Insulating part: PA 66/6, glass-fibre reinforced gray or black, UL 94-V-0
Contact pin: tin-plated brass

# Accessories

wiecon

**Spacing: 5.00 mm**

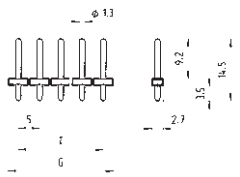

**Spacing: 10.00 mm**

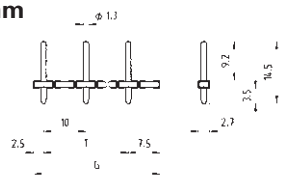

Color: black
Solder pin Ø 1.0 mm
Bore hole Ø 1.3 mm

Color: black
Solder pin Ø 1.3 mm
Bore hole Ø 1.6 mm

## Terminal strip header

horizontal mount

**vertical mount**

**horizontal mount**

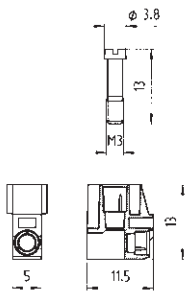

**Bore hole plan** for fixing brackets vertical mount

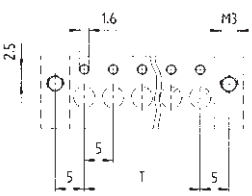

**Bore hole plan** for fixing brackets horizontal mount

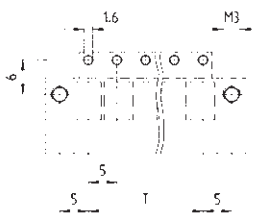

| Part no. | Part no. |
|---|---|
| Color: black | Color: black |
| Z5.540.0225.0<br>Z5.540.0325.0<br>Z5.540.0425.0 | Z5.540.3225.0<br>Z5.540.3325.0<br>Z5.540.3425.0 |
| Z5.540.0525.0<br>Z5.540.0625.0<br>Z5.540.0725.0 | Z5.540.3525.0<br>Z5.540.3625.0<br>Z5.540.3725.0 |
| Z5.540.0825.0<br>Z5.540.0925.0<br>Z5.540.1025.0 | Z5.540.3825.0<br>Z5.540.3925.0<br>Z5.540.4025.0 |
| Z5.540.1125.0<br>Z5.540.1225.0<br>Z5.540.1325.0 | Z5.540.4125.0<br>Z5.540.4225.0<br>Z5.540.4325.0 |
| Z5.540.1425.0<br>Z5.540.1525.0<br>Z5.540.1625.0 | Z5.540.4425.0<br>Z5.540.4525.0<br>Z5.540.4625.0 |
| Z5.540.6225.0<br>Z5.540.6325.0<br>Z5.540.6425.0 | Z5.540.8225.0<br>Z5.540.8325.0<br>Z5.540.8425.0 |
| Z5.540.6525.0<br>Z5.540.6625.0<br>Z5.540.6725.0 | Z5.540.8525.0<br>Z5.540.8625.0<br>Z5.540.8725.0 |
| Z5.540.6825.0 | Z5.540.8825.0 |

| | Part no. | Std. pack |
|---|---|---|
| Fixing brackets:<br>Insulating material PA 66/6 gray,<br>Screw M 3, zinc-plated steel | | |
| | Z5.523.7653.0 | 100 |
| Coding piece strip | | |
| Color: white | 05.561.9453.0 | 25 |
| Color: white | 05.561.9453.5 | 25 |
| Cover/marking strip 12 poles | | |

| | Part no. | Std. pack |
|---|---|---|
| | Z5.523.7653.0 | 100 |
| Coding piece strip | | |
| Color: white | 05.561.9453.0 | 25 |
| Color: orange | 05.561.9453.5 | 25 |

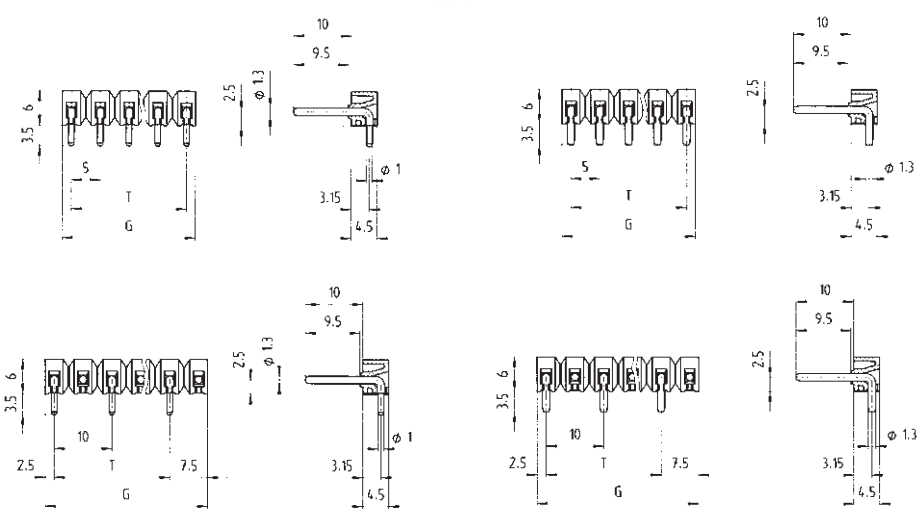

wiecon

# PC board connectors, pluggable, spacing: 5.08 mm

**wiecon** PCB

codable

**1,5 mm²**

Rated cross section:
1.5 mm²

Rated current:
10 A

Connection range:
0.14 – 2.5 mm² solid/
0.14 – 1.5 mm² fine stranded

200 V/4 kV/3 – Overvoltage category III
250 V/4 kV/2 – Overvoltage category II
1000 V/4 kV/1 – Overvoltage category I

Statement of Conformity/CH

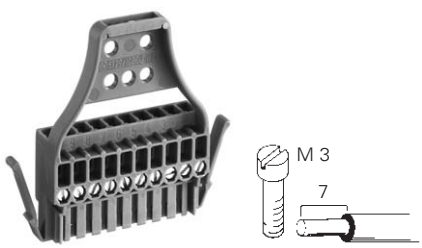

Solder pin Ø 1.3 mm
Bore hole Ø 1.6 mm

| | TOP connector, 10pole Type ST 29/10 BC plug-in 90° to wire entry | | | Terminal strip header vertical mount | | |
|---|---|---|---|---|---|---|
| Rated voltages: VDE 0110 EN 60 998-1, EN 60 998-2-1 | 1.5 mm² | 250 V | 10 A | | 250 V | 10 A |
| UL ratings | No. 22 – 14 AWG | 300 V | 5 A | (if all terminals carry current) | | 10 A |
| CSA ratings | No. 22 – 14 AWG | 300 V | 5 A | | 300 V | 5 A |
| Approvals | | | | | | |

| Poles | Type | Part no. | Std. pack | Type | Part no. | Std. pack |
|---|---|---|---|---|---|---|
| **Spacing: 5.08 mm** | | | | | | |
| 10 | ST 29/10 BC | 93.101.2053.0 | 50 | | Z5.599.9025.0 | 50 |

Material:
**PC board connectors**
Insulating housing: PA 66/6 gray, UL 94-V-2
Clamping body: nickel-plated brass
Clamping screws: zinc-plated steel
Contact spring: tin-plated bronze

**Terminal strip header**
Insulating part: PBT, glass-fibre reinforced gray, UL 94-V-0
Contact pin: tin-plated brass

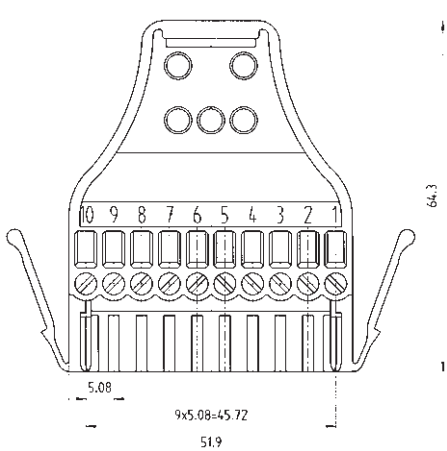


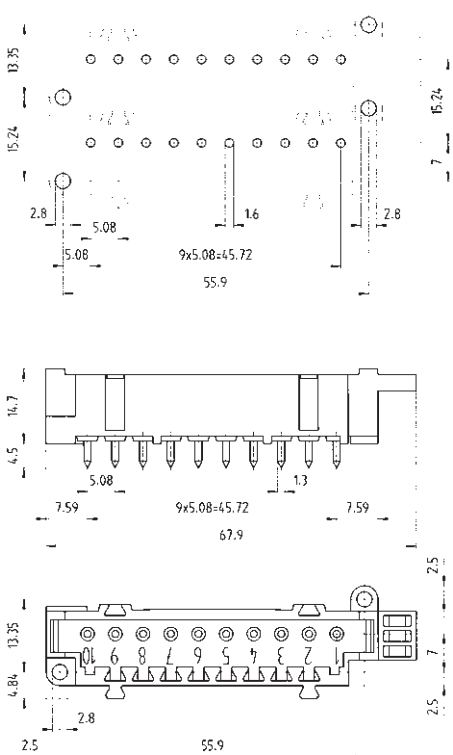

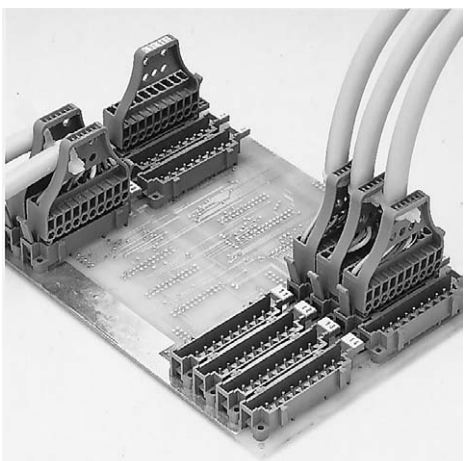

| Accessories | Type | Part no. | Std. pack |
|---|---|---|---|
| Coding pieces, 10 codings each per strip | | 05.599.8053.0 | 100 |
| Marking tag, unmarked | 9705 A | 04.242.0850.0 | 500 |
| marked | 9705 AB | 04.842.0850.0 | 500 |

**Coding plan**
L = PC board connector
S = terminal strip header

| | | | | | | | | |
|---|---|---|---|---|---|---|---|---|
| Combination 01 | S | L | L | L | L | L | L | S |
| Combination 02 | S | L | L | L | L | L | S | L |
| Combination 03 | S | L | L | L | L | S | L | L |
| Combination 04 | S | L | L | L | S | L | L | L |
| Combination 05 | S | L | L | S | L | L | L | L |
| Combination 06 | S | L | S | L | L | L | L | L |
| Combination 07 | S | S | L | L | L | L | L | L |
| Combination 08 | L | S | L | L | L | L | L | S |
| Combination 09 | L | S | L | L | L | L | S | L |
| Combination 10 | L | S | L | L | L | S | L | L |
| Combination 11 | L | S | L | L | S | L | L | L |
| Combination 12 | L | S | L | S | L | L | L | L |
| Combination 13 | L | S | S | L | L | L | L | L |
| Combination 14 | L | L | S | L | L | L | L | S |

etc.

## Pluggable terminal strip header with TOP connection

A special version of the TOP system is the 5.08 mm spaced terminal strip header which can be soldered into a PC board. Two mounting holes are available in order to fix the terminal strip header.
– Strain relief
– Locking device
– Marking capabilities

By means of dove-tail guides, several terminal strip headers can be snapped together, while only the outer headers of this group must be mechanically fixed on the printed circuit board. In order to guarantee the necessary stability on the printed circuit board, it is not recommended to exceed four terminal strip headers in a group.
The terminal TOP connector and terminal strip header each possess eight slots for coding to prevent mismating the TOP plug-in system.

# Spring clamp connector for PC boards
# Type 8520 B, pluggable design

## wiecon PCB

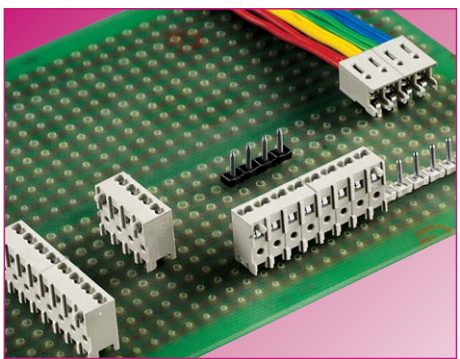

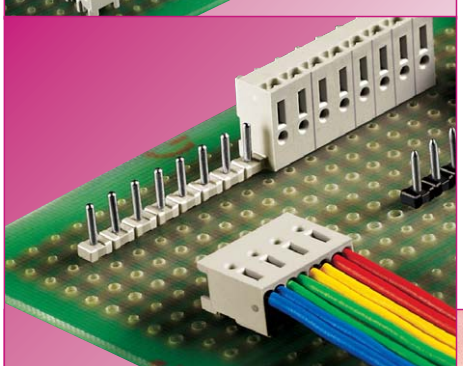

The advantage of a PC board connector with spring clamp termination is that connections to the PC board can be made in a fast and economical way. Based on this fact, Wieland Electric GmbH developed their new PC board connector type 8520.

The main field of application for this PC board connector is in communication technology, a sector which demands fast connections.

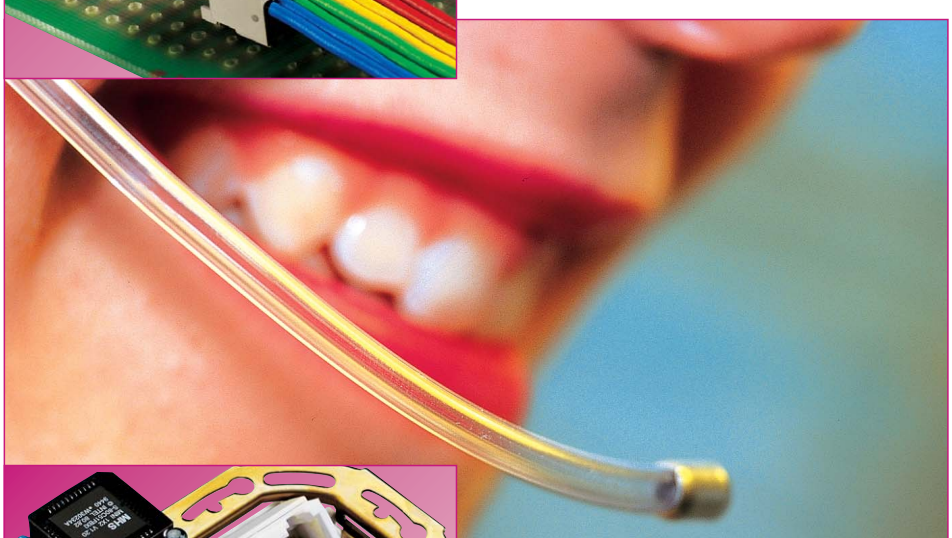

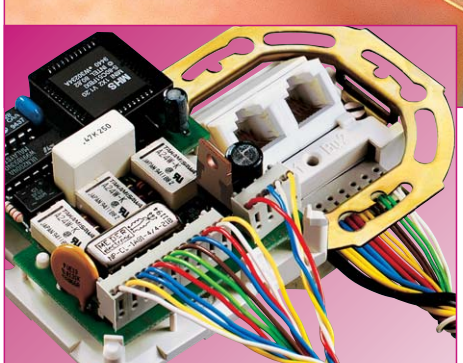

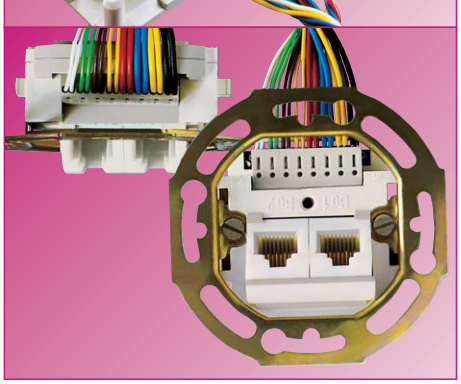

Further advantages:

- ❒ no clamping screws
- ❒ minimized wiring times
- ❒ permanent and continuous clamping forces
- ❒ vibration- and shock-proof
- ❒ maintenance-free

Different versions of type 8520 expand the spectrum of applications. It is available as a pluggable connector with matching pin strip, and in a direct mount solder version with vertical and horizontal solder pins. The rated cross section is 0.5 mm$^2$ solid, which makes the wiring process easy: simply push the solid conductor into the clamp, forcing it open, no tools required. The spring clamp tension will securely terminate the conductor. The spacing is 3.5 mm and the pole configerations vary between 2 and 16 poles.

| | | Page 324 | Page 325 | Page 325 |
|---|---|---|---|---|
| | | 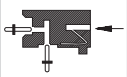 | 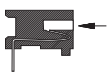 | |
| **Type** | | **8520 B** | **8520 BL/...W** | **8520 BL/...G** |
| **Spacing** | **mm** | **3.50/7.00** | **3.50/7.00** | **3.50/7.00** |
| **Cross section** | **mm²** | **0.25 – 0.50** | **0.25 – 0.50** | **0.25 – 0.50** |
| **Number of poles** | | **2 – 16** | **2 – 16** | **2 – 16** |



IERTES
O 9001
SSICHERUNGSSYSTEM
-Nr. 14 194-02

# Spring clamp connector for PC boards, Type 8520, pluggable, spacings: 3.50/7.00 mm, 2 x 0.5 mm²

**wiecon** PCB

Rated cross section:
0.5 mm²

Rated current:
4 A

Connection range:
0.25 – 0.5 mm² solid
2 connections per pole

160 V/2.5 kV/3 – Overvoltage category III
250 V/2.5 kV/2 – Overvoltage category II
*690 V/2.5 kV/1 – Overvoltage category I

**Spacing: 3.50 mm**

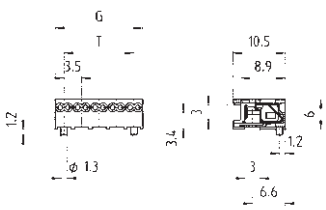


**Spacing: 3.50 mm**

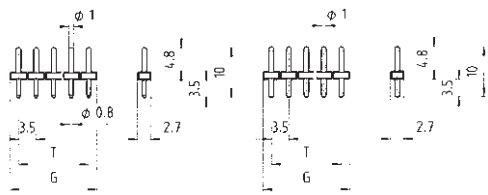

Color: gray
Solder pin Ø 0.8 mm
Bore hole Ø 1.0 mm

Color: black
Solder pin Ø 1.0 mm
Bore hole Ø 1.2 mm

* max. 600 V for ungrounded networks or expected overvoltage ≤ 3 kV for L ≥ 2.0 mm and ≤ 2.5 kV for 2.0 mm > L ≥ 1.5 mm

**Type 8520 B**
plug-in horizontal and vertical

**Pin strip 8520 S**
vertical mount

| | | | |
|---|---|---|---|
| Rated voltages: VDE 0110 (Spacing: 3.5 mm) | | | |
| UL ratings | No. 24 – 20 AWG | 300 V | 4 A |
| CSA ratings | No. 24 – 20 AWG | 300 V | 4 A |
| Approvals | | | |

| Std. pack | G | T | Poles | Part no. unmarked | Part no. marked | Part no. Color: gray | Part no. Color: black |
|---|---|---|---|---|---|---|---|
| **Spacing: 3.50 mm** | | | | | | | |
| 1000 | 7.0 | 3.5 | 2 | 25.470.0253.0 | 25.470.3253.0 | Z5.535.0225.0 | Z5.535.3225.0 |
| 1000 | 10.5 | 7.0 | 3 | 25.470.0353.0 | 25.470.3353.0 | Z5.535.0325.0 | Z5.535.3325.0 |
| 1000 | 14.0 | 10.5 | 4 | 25.470.0453.0 | 25.470.3453.0 | Z5.535.0425.0 | Z5.535.3425.0 |
| 500 | 17.5 | 14.0 | 5 | 25.470.0553.0 | 25.470.3553.0 | Z5.535.0525.0 | Z5.535.3525.0 |
| 500 | 21.0 | 17.5 | 6 | 25.470.0653.0 | 25.470.3653.0 | Z5.535.0625.0 | Z5.535.3625.0 |
| 500 | 24.5 | 21.0 | 7 | 25.470.0753.0 | 25.470.3753.0 | Z5.535.0725.0 | Z5.535.3725.0 |
| 500 | 28.0 | 24.5 | 8 | 25.470.0853.0 | 25.470.3853.0 | Z5.535.0825.0 | Z5.535.3825.0 |
| 250 | 31.5 | 28.0 | 9 | 25.470.0953.0 | 25.470.3953.0 | Z5.535.0925.0 | Z5.535.3925.0 |
| 250 | 35.0 | 31.5 | 10 | 25.470.1053.0 | 25.470.4053.0 | Z5.535.1025.0 | Z5.535.4025.0 |
| 250 | 38.5 | 35.0 | 11 | 25.470.1153.0 | 25.470.4153.0 | Z5.535.1125.0 | Z5.535.4125.0 |
| 250 | 42.0 | 38.5 | 12 | 25.470.1253.0 | 25.470.4253.0 | Z5.535.1225.0 | Z5.535.4225.0 |
| 250 | 45.5 | 42.0 | 13 | 25.470.1353.0 | 25.470.4353.0 | Z5.535.1325.0 | Z5.535.4325.0 |
| 250 | 49.0 | 45.5 | 14 | 25.470.1453.0 | 25.470.4453.0 | Z5.535.1425.0 | Z5.535.4425.0 |
| 250 | 52.5 | 49.0 | 15 | 25.470.1553.0 | 25.470.4553.0 | Z5.535.1525.0 | Z5.535.4525.0 |
| 250 | 56.0 | 52.5 | 16 | 25.470.1653.0 | 25.470.4653.0 | Z5.535.1625.0 | Z5.535.4625.0 |
| **Spacing: 7.00 mm** | | | upon request | | | | |

Rated voltages:
(spacing: 7.00 mm): VDE 0110

400 V/6 kV/3 – Overvoltage category III
690 V/6 kV/2 – Overvoltage category II
1000 V/6 kV/1 – Overvoltage category I

Material:
**PC board connectors**
Insulating housing: PA 66/6, UL 94-V0
Clamping spring: special copper alloys
tin-plated

**Pin strips**
Insulating part: PA 66/6, glass-fibre reinforced
gray or black, UL 94-V-0
Contact pin: tin-plated brass

# Spring clamp connector for PC boards, Type 8520 BL, direct mount spring clamp Spacings: 3.50/7.00 mm, 2 x 0.5 mm²

Rated cross section:
0.5 mm²

Rated current:
4 A

Connection range:
0.25 – 0.5 mm² solid
2 connections per pole

160 V/2.5 kV/3 – Overvoltage category III
250 V/2.5 kV/2 – Overvoltage category II
*690 V/2.5 kV/1 – Overvoltage category I

**Spacing: 3.50 mm**

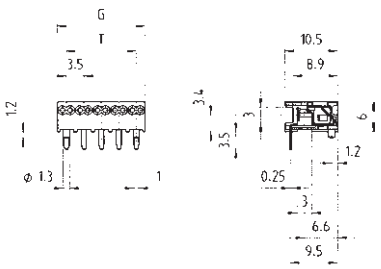

**Spacing: 3.50 mm**

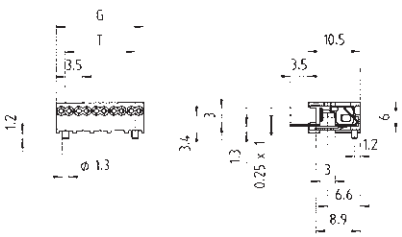

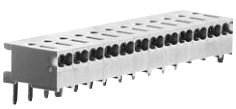

Solder pin 0.25 x 1.0 mm
Bore hole Ø 1.1 mm

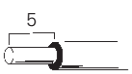

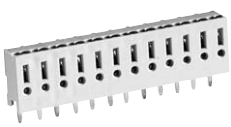

* max. 600 V ungrounded networks or expected overvoltage ≤ 3 kV for L ≥ 2.0 mm and ≤ 2.5 kV for 2.0 mm > L ≥ 1.5 mm

**Type 8520 BL/...W**
Wire horizontal to PC board

**Type 8520 BL/...G**
Wire vertical to PC board

| | | | | | |
|---|---|---|---|---|---|
| Rated voltages: VDE 0110 | | | | | |
| UL ratings | No. 24 – 20 AWG | 300 V | 4 A | No. 24 – 20 AWG | 300 V | 4 A |
| CSA ratings | No. 24 – 20 AWG | 300 V | 4 A | No. 24 – 20 AWG | 300 V | 4 A |
| Approvals pending | | | | | |

| Std. pack | G | T | Poles | Part no. unmarked | Part no. marked | Part no. unmarked | Part no. marked |
|---|---|---|---|---|---|---|---|
| **Spacing: 3.50 mm** | | | | | | | |
| 1000 | 7.0 | 3.5 | 2 | 25.471.0253.0 | 25.471.3253.0 | 25.472.0253.0 | 25.472.3253.0 |
| 1000 | 10.5 | 7.0 | 3 | 25.471.0353.0 | 25.471.3353.0 | 25.472.0353.0 | 25.472.3353.0 |
| 1000 | 14.0 | 10.5 | 4 | 25.471.0453.0 | 25.471.3453.0 | 25.472.0453.0 | 25.472.3453.0 |
| 500 | 17.5 | 14.0 | 5 | 25.471.0553.0 | 25.471.3553.0 | 25.472.0553.0 | 25.472.3553.0 |
| 500 | 21.0 | 17.5 | 6 | 25.471.0653.0 | 25.471.3653.0 | 25.472.0653.0 | 25.472.3653.0 |
| 500 | 24.5 | 21.0 | 7 | 25.471.0753.0 | 25.471.3753.0 | 25.472.0753.0 | 25.472.3753.0 |
| 500 | 28.0 | 24.5 | 8 | 25.471.0853.0 | 25.471.3853.0 | 25.472.0853.0 | 25.472.3853.0 |
| 250 | 31.5 | 28.0 | 9 | 25.471.0953.0 | 25.471.3953.0 | 25.472.0953.0 | 25.472.3953.0 |
| 250 | 35.0 | 31.5 | 10 | 25.471.1053.0 | 25.471.4053.0 | 25.472.1053.0 | 25.472.4053.0 |
| 250 | 38.5 | 35.0 | 11 | 25.471.1153.0 | 25.471.4153.0 | 25.472.1153.0 | 25.472.4153.0 |
| 250 | 42.0 | 38.5 | 12 | 25.471.1253.0 | 25.471.4253.0 | 25.472.1253.0 | 25.472.4253.0 |
| 250 | 45.5 | 42.0 | 13 | 25.471.1353.0 | 25.471.4353.0 | 25.472.1353.0 | 25.472.4353.0 |
| 250 | 49.0 | 45.5 | 14 | 25.471.1453.0 | 25.471.4453.0 | 25.472.1453.0 | 25.472.4453.0 |
| 250 | 52.5 | 49.0 | 15 | 25.471.1553.0 | 25.471.4553.0 | 25.472.1553.0 | 25.472.4553.0 |
| 250 | 56.0 | 52.5 | 16 | 25.471.1653.0 | 25.471.4653.0 | 25.472.1653.0 | 25.472.4653.0 |

**Spacing: 7.00 mm** upon request

Rated voltages:
(Spacing: 7.00 mm): VDE 0110

400 V/6 kV/3 – Overvoltage category III
690 V/6 kV/2 – Overvoltage category II
1000 V/6 kV/1 – Overvoltage category I

Bore hole plan, 3.50/7.00 mm spacing with angled solder pin and fixing bolts:

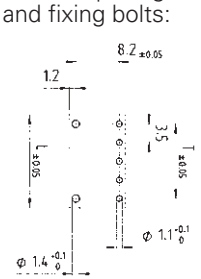

# PC board connectors
# edge card pluggables

# wiecon PCB

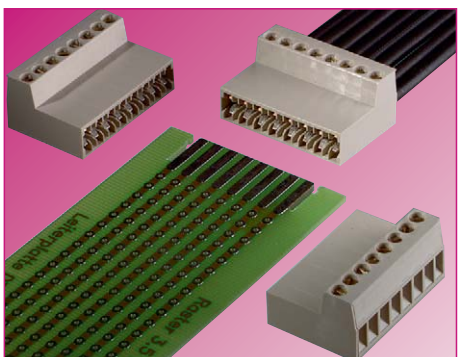

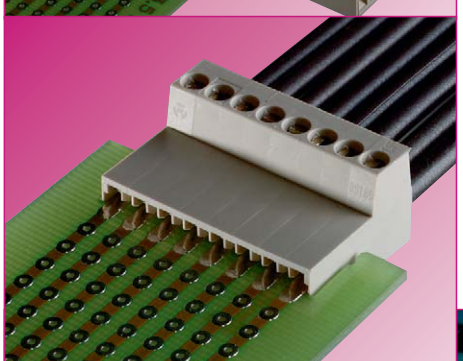

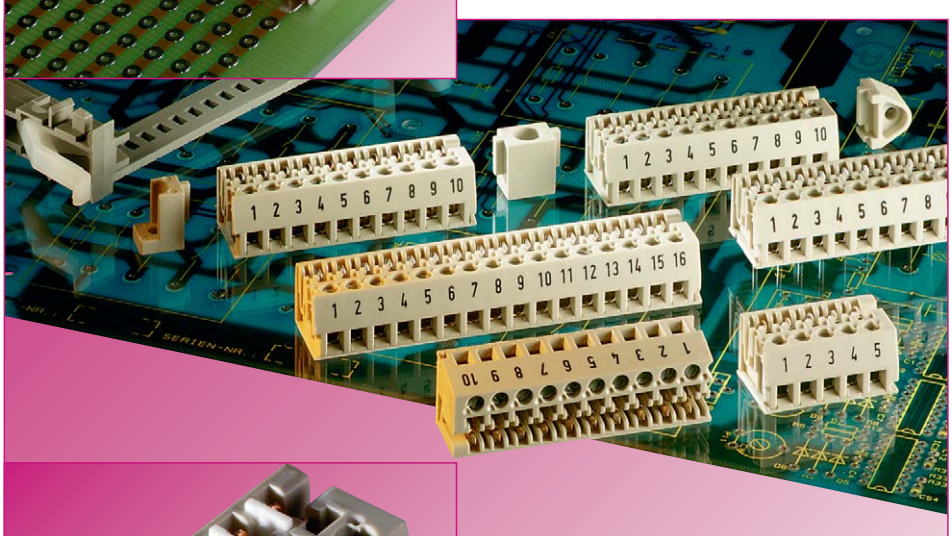

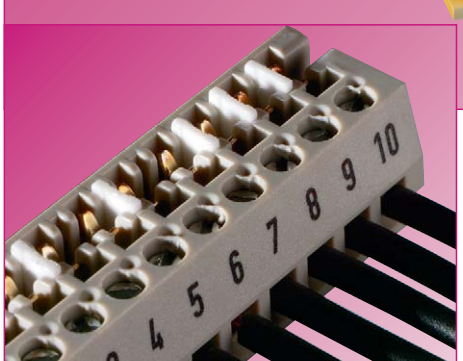

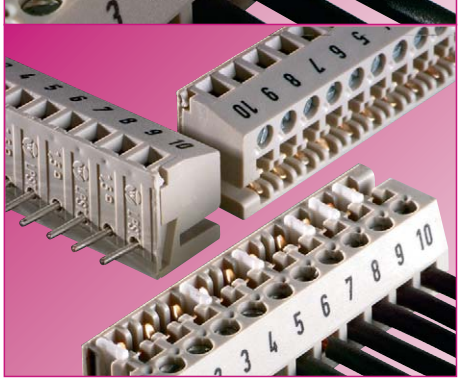

Edge card pluggables offer the advantages of standard pluggable connectors, but without the requirement of the mounting header.

### System features

- ❒ installation and maintenance friendly
- ❒ easy-to-operate screw termination
- ❒ quick disconnect
- ❒ clear, organized wiring
- ❒ thickness of PC board: 1.4 mm to 1.8 mm
- ❒ floating contact springs
- ❒ secure, robust clamping mechanism

### Coding

- ❒ coding without pole loss
- ❒ PC board with coding slots accept coding pieces inserted into the plug

### Marking

- ❒ smudge-proof inkjet marking directly on the connector
- ❒ custom marking possible, consult factory
- ❒ clear, easily legible marking

### Variety of types

- ❒ in 3.5 mm and 5 mm spacing
- ❒ pole configurations from 2 to 24 poles
- ❒ cross sections up to 1.5 $mm^2$
- ❒ with open side walls: snap together adjacently. or with closed side walls: prevent mis-mating
- ❒ with or without solder pins

### Fixing brackets

- ❒ for secure connection of printed circuit board and connector
- ❒ special fixing brackets as guides for large PC boards. With fixing bolts on the sides at the top and bottom which fix backing strips creating a stable guiding frame.

### Material

Metal parts:

- ❒ made from special alloys and/or special surface treatments
- ❒ minimum feed through resistance
- ❒ high corrosion resistance

Insulating housings:

- ❒ use of high-quality polyamide for its excellent electrical, mechanical and chemical characteristics (see ***facts*** & DATA: Technical information)
- ❒ materials as per US standard UL 94-V-0
- ❒ colors: gray, similar to RAL 7032

### Note:

The information regarding cross sectional areas and connection types pertains to connections without ferrules.

The indicated rated current corresponds to the maximum load for the PC board connector with a connected wire of the indicated rated cross section.

The rated voltage is indicated as per DIN VDE 0110 part 1 (IEC 60 664-1) – insulation coordinates for electrical material in low voltage application – and refers to the delivered state of the PC board connector.

Before the PC board is fitted with connectors, an appropriate PC board must be selected and dimensioned accordingly (e.g. regarding tracking resistance of the printed circuit board, distances of the leads and solder joints).

Furthermore, the ambient conditions under which the materials shall be used, must be considered.

The indicated rated voltages will be valid for the complete module only if the printed circuit board and its connectors are correctly and clearly adjusted to each other.

Abbreviations for plastic materials:

PA 66/6 = Polyamide 66/6
PC = Polycarbonate
PBT = Polybutylenterephthalate

wiecon

| | | Page 328 | Page 328 | Page 330 | Page 330 |
|---|---|---|---|---|---|
| | | 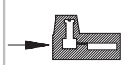 | | | 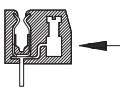 |
| **Type** | | **DST 85** | **DSTLF 85** | **LPST 1** | **LPSTL 1** |
| **Spacing** | **mm** | **3.50** | **3.50** | **5.00** | **5.00** |
| **Cross section** | **mm²** | **1.5** | **1.5** | **2.5** | **2.5** |
| **Number of poles** | | **2 – 24** | **2 – 24** | **2 – 20** | **2 – 20** |

**For all solderable PC board terminals it is important that recommended torque values are not exceeded.**



IERTES
O 9001
SSICHERUNGSSYSTEM
-Nr. 14 194-02

# PC board connectors
# edge card pluggables, spacing: 3.50 mm

**wiecon** PCB

Rated cross section:
1.5 mm²

Rated current:
6 A

Connection range:
0.14 – 1.5 mm² solid/fine stranded

125 V/2.5 kV/3 – Overvoltage category III
250 V/2.5 kV/2 – Overvoltage category II
*690 V/2.5 kV/1 – Overvoltage category I

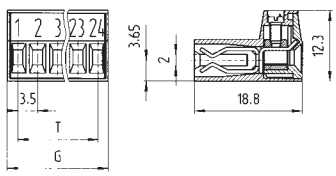


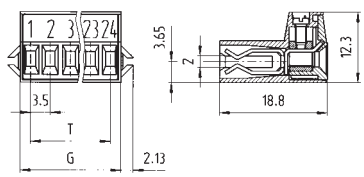


* max. 600 V for ungrounded networks or expected overvoltage ≤ 3 kV for L ≥ 2.0 mm and ≤ 2.5 kV for 2.0 mm > L ≥ 1.5 mm

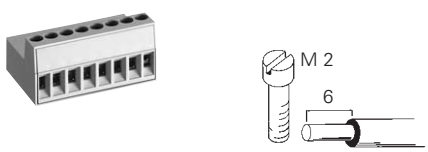


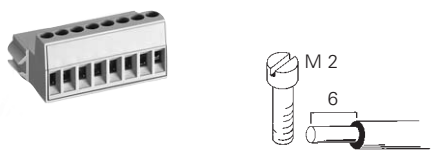


| | **Type DST 85**<br>plug-in 180° to wire entry | | | **Type DST LF 85**<br>plug-in 180° to wire entry | | |
|---|---|---|---|---|---|---|
| Rated voltages: VDE 0110 | | | | | | |
| UL ratings | No. 30 – 14 AWG | 300 V | 6 A | No. 30 – 14 AWG | 300 V | 6 A |
| CSA ratings | No. 30 – 14 AWG | 300 V | 6 A | No. 30 – 14 AWG | 300 V | 6 A |
| Approvals | | | | | | |

| Std. pack | G | T | Poles | Part no. unmarked | Part no. marked | Part no. unmarked | Part no. marked |
|---|---|---|---|---|---|---|---|
| **Spacing: 3.50 mm** | | | | | | | |
| 100 | 7.1 | 3.4 | 2 | 25.003.0253.0 | 25.002.0253.0 | 25.005.0253.0 | 25.004.0253.0 |
| 100 | 10.5 | 6.8 | 3 | 25.003.0353.0 | 25.002.0353.0 | 25.005.0353.0 | 25.004.0353.0 |
| 50 | 14.0 | 10.3 | 4 | 25.003.0453.0 | 25.002.0453.0 | 25.005.0453.0 | 25.004.0453.0 |
| 50 | 17.5 | 13.8 | 5 | 25.003.0553.0 | 25.002.0553.0 | 25.005.0553.0 | 25.004.0553.0 |
| 50 | 21.0 | 17.3 | 6 | 25.003.0653.0 | 25.002.0653.0 | 25.005.0653.0 | 25.004.0653.0 |
| 50 | 24.5 | 20.8 | 7 | 25.003.0753.0 | 25.002.0753.0 | 25.005.0753.0 | 25.004.0753.0 |
| 50 | 28.0 | 24.3 | 8 | 25.003.0853.0 | 25.002.0853.0 | 25.005.0853.0 | 25.004.0853.0 |
| 50 | 31.5 | 27.8 | 9 | 25.003.0953.0 | 25.002.0953.0 | 25.005.0953.0 | 25.004.0953.0 |
| 50 | 35.0 | 31.3 | 10 | 25.003.1053.0 | 25.002.1053.0 | 25.005.1053.0 | 25.004.1053.0 |
| 50 | 38.5 | 34.8 | 11 | 25.003.1153.0 | 25.002.1153.0 | 25.005.1153.0 | 25.004.1153.0 |
| 50 | 42.0 | 38.3 | 12 | 25.003.1253.0 | 25.002.1253.0 | 25.005.1253.0 | 25.004.1253.0 |
| only available up to 12pole | | | | | | | |

Thickness of PC board: 1.4 mm – 1.8 mm

Material:
**PC board connectors**
Insulating housing: PA 66/6 gray, UL 94-V0
Clamping body: nickel-plated brass
Clamping screw: zinc-plated steel
Contact spring: tin-plated bronze

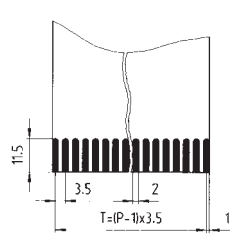


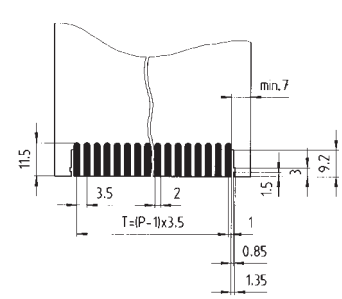

wiecon

# PC board connector
# card edge design, spacing: 5.00 mm

**wiecon** PCB

Rated cross section:
2.5 mm²

Rated current:
5 A

Connection range:
0.14 – 4.0 mm² solid/
0.14 – 2.5 mm² fine stranded

200 V/4 kV/3 – Overvoltage category III
320 V/4 kV/2 – Overvoltage category II
1000 V/4 kV/1 – Overvoltage category I

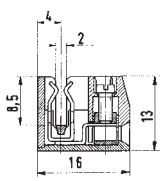


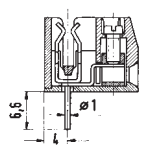


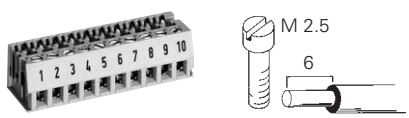


**without solder connection for PC boards**

**Type LPST 1**
plug-in 90° to wire entry

**with solder connection for PC boards**

**Type LPSTL 1**
plug-in 90° to wire entry

| | | | | |
|---|---|---|---|---|
| Rated voltages VDE 0110 | | | | |
| UL ratings | No. 22 – 14 AWG | 300 V | 5 A | No. 22 – 14 AWG 300 V 5 A |
| CSA ratings | No. 22 – 14 AWG | 300 V | 5 A | No. 22 – 14 AWG 300 V 5 A |
| Approvals | | | | |

| Std. pack | U | G | T | Poles | Part no. marked | Part no. unmarked | Part no. marked |
|---|---|---|---|---|---|---|---|
| **Spacing: 5.00 mm** | | | | | | | |
| 100 | 25 | 14 | 5 | 2 | 25.000.0256.0 | 25.010.0256.0 | 25.001.0256.0 |
| 100 | 30 | 19 | 10 | 3 | 25.000.0356.0 | 25.010.0356.0 | 25.001.0356.0 |
| 50 | 35 | 24 | 15 | 4 | 25.000.0456.0 | 25.010.0456.0 | 25.001.0456.0 |
| 50 | 40 | 29 | 20 | 5 | 25.000.0556.0 | 25.010.0556.0 | 25.001.0556.0 |
| 50 | 45 | 34 | 25 | 6 | 25.000.0656.0 | 25.010.0656.0 | 25.001.0656.0 |
| 50 | 50 | 39 | 30 | 7 | 25.000.0756.0 | 25.010.0756.0 | 25.001.0756.0 |
| 50 | 55 | 44 | 35 | 8 | 25.000.0856.0 | 25.010.0856.0 | 25.001.0856.0 |
| 50 | 60 | 49 | 40 | 9 | 25.000.0956.0 | 25.010.0956.0 | 25.001.0956.0 |
| 50 | 65 | 54 | 45 | 10 | 25.000.1056.0 | 25.010.1056.0 | 25.001.1056.0 |
| 50 | 70 | 59 | 50 | 11 | 25.000.1156.0 | 25.010.1156.0 | 25.001.1156.0 |
| 50 | 75 | 64 | 55 | 12 | 25.000.1256.0 | 25.010.1256.0 | 25.001.1256.0 |
| 50 | 80 | 69 | 60 | 13 | 25.000.1356.0 | 25.010.1356.0 | 25.001.1356.0 |
| 50 | 85 | 74 | 65 | 14 | 25.000.1456.0 | 25.010.1456.0 | 25.001.1456.0 |
| 50 | 90 | 79 | 70 | 15 | 25.000.1556.0 | 25.010.1556.0 | 25.001.1556.0 |
| 50 | 95 | 84 | 75 | 16 | 25.000.1656.0 | 25.010.1656.0 | 25.001.1656.0 |
| | | | | 17 to 20pole upon request | | | |

Thickness of PC board: 1.4 mm – 1.8 mm

Material:
**PC board connectors**
Insulating housing: PBT, glass-fibre reinforced
gray, UL 94-V-2
Clamping body: nickel-plated brass
Clamping screw: zinc-plated steel
Contact spring: tin bronze
– LPST 1: silver-plated
– LPSTL 1: tin-plated

# Accessories

wiecon

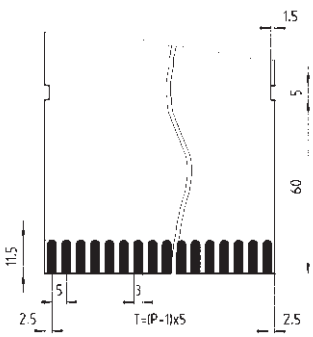


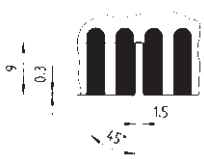


The PC board card edge connectors are fixed by means of card holders. For large printed circuit boards, card holders with guided frames are to be used.

These card holders have locking bolts at the top, the bottom and on both sides, on which backing strips can be fixed, creating a stable guide frame.

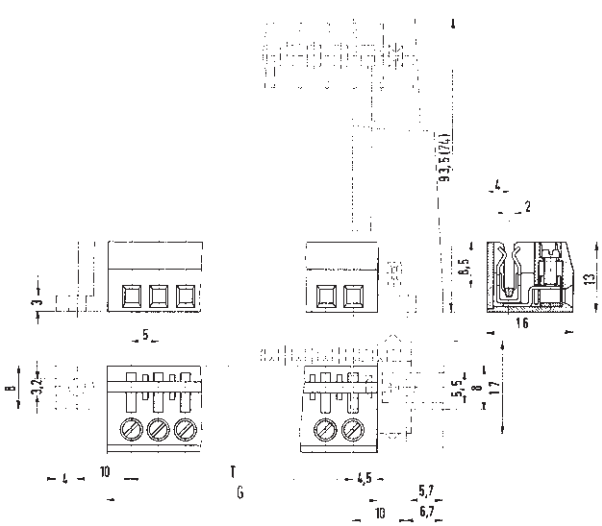


| Type | Part no. | Std. pack |
|---|---|---|
| | | |
| Card holder<br>H 93.5 mm | | |
| with guided frame | 05.593.8853.0 | 100 |
| with locking lever | 05.594.3653.0 | 200 |
| Card holder<br>H 74 mm with guided frame | | |
| with locking bolts | 05.599.2853.0 | 100 |
| without locking bolts | 05.599.2953.0 | 100 |
| 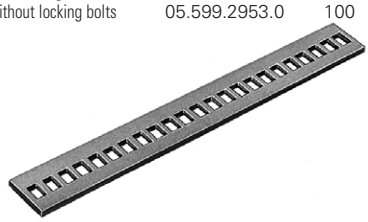 | | |
| Backing strip | 07.413.3653.0 | 100 |
| * | | |
| Coding chip | 05.593.7756.0 | 500 |
| | | |
| Card holder | 05.522.7356.0 | 200 |
| | | |
| Card holder | 05.522.7856.0 | 200 |
| | | |
| Middle clamp | 05.522.7756.0 | 100 |

* Side walls available either on the right, or the left side or not at all, as the parts are cut to the required number of poles; therefore outside coding might not be possible.

# wiecon PCB

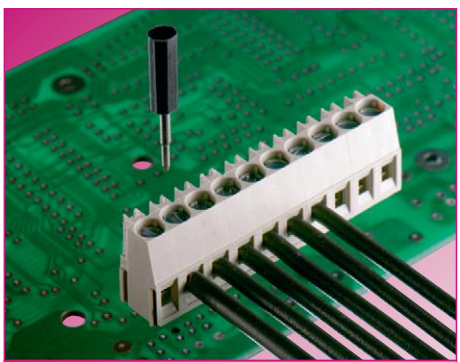

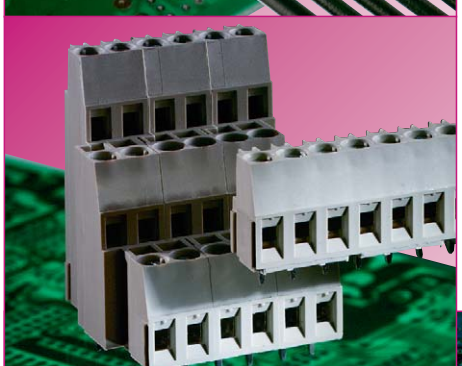

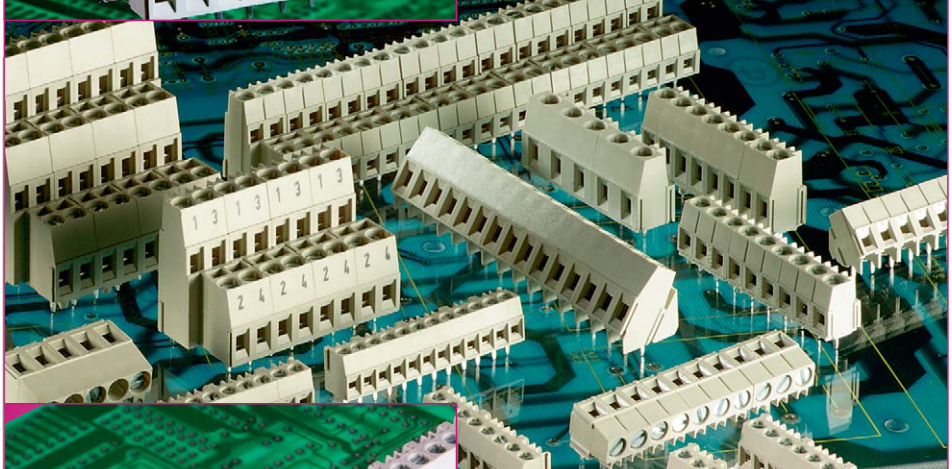

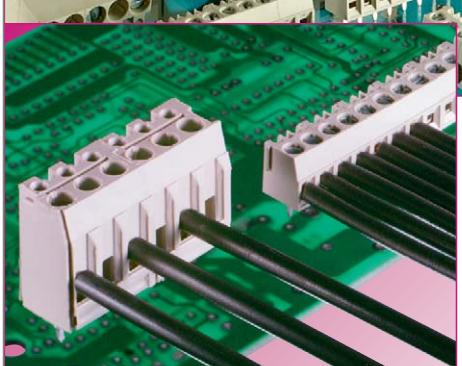

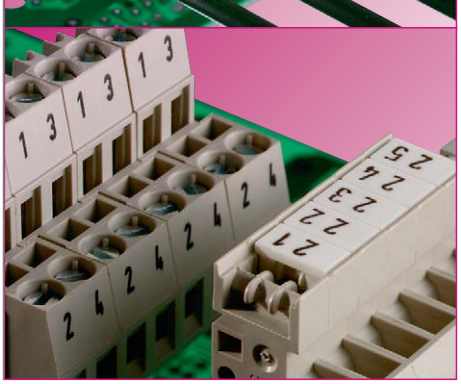

## System features

- ❒ easy-to-operate application-specific connections
- ❒ connector soldered directly onto the printed circuit board
- ❒ low mechanical stress on the solder joint
- ❒ clear, open wire access
- ❒ individual wire entry as per application requirements
- ❒ multiple pole configurations
- ❒ accept solid and fine stranded wires from 0.14 $mm^2$ to 16 $mm^2$
- ❒ in metric and inch spacing; inch spacing is indicated on the wire entry guide by means of a stud.
- ❒ wire clamping via rising cage clamp (elevator principle), clamping body with wire protection
- ❒ PC board connector with TOP connection
- ❒ PC board connector with spring clamp connection

## Marking

- ❒ smudge-proof inkjet marking directly on the connector
- ❒ marking of individual poles with snap-on marking tag
- ❒ connectors with or without marking tag carriers
- ❒ custom marking possible, consult factory

Abbreviations for plastic materials:

PA 66/6 = Polyamide 66/6
PC = Polycarbonate
PBT = Polybutylenterephthalate

## Variety of types

- ❒ pole configurations from 2 to 24 poles
- ❒ wiring horizontal and vertical to the printed circuit board
- ❒ wiring in 45° or 35° angle possible
- ❒ in metric spacing: 3.5/5/7.5/10) mm or inch spacing: 3.81/5.08/7.62/10.16/20.32 mm
- ❒ individual connectors snap together
- ❒ multi-pole, single housing blocks
- ❒ with or without insulating plate
- ❒ with or without test fixture
- ❒ with or without fixing bolts

## Material

Metal parts:

- ❒ made from special alloys and/or special surface treatments
- ❒ low feed through resistance
- ❒ high corrosion resistance
- ❒ secure, consistent clamping function

Insulating housings:

- ❒ use of high-quality Polyamide 66/6 for its excellent electrical, mechanical and chemical characteristics (for specifics, see individual connectors)

## DQS certificates for all product families

- ❒ quality standard as per DIN ISO 9001
- ❒ in Development, Production, Assembly
- ❒ continued control of the quality standards by means of regular internal and external quality audits
- ❒ compatible with certificates of other countries:
  - BSI Certificate, Great Britain
  - SQS Certificate, Switzerland
  - Aib-Vincotte Certificate, Belgium
  - ÖQS Certificate, Austria

# wiecon

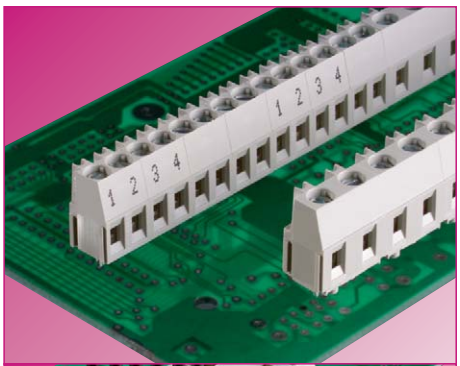


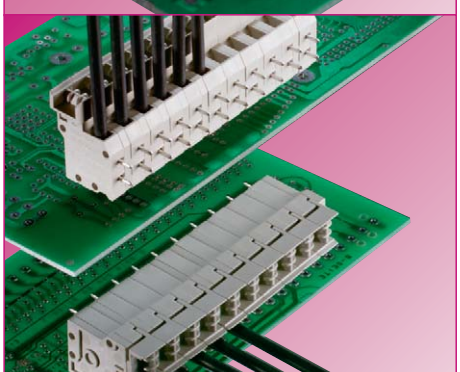

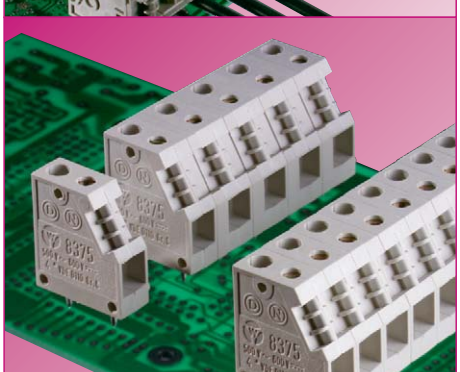

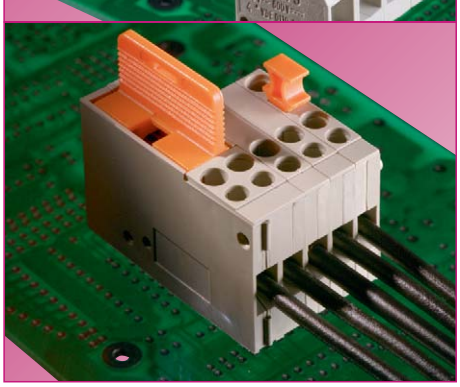

**Insulating plate**

- ❒ covers the clamping body with a plastic plate
- ❒ the safety values for air and creepage distances and clearances of the traces of the PC board connector are increased
- ❒ fixing bolts on the insulating plate of 2 and 3pole connectors reduce the mechanical stress on the solder joint

**TOP connection**

- ❒ screw termination in same plane as wire entry
- ❒ easy access for the user in narrow spaces
- ❒ snap-on marking tag carrier
- ❒ double solder tails per pole

**Single pole connectors**

- ❒ single connectors snap together
- ❒ secure, tight locking pins
- ❒ the spacing can be expanded by means of spacer plates
- ❒ available spacings: 5.00/5.08/6.35/7.50/7.62/10.00/10.16/20.32 mm
- ❒ with end plate
- ❒ two solder tails per pole

**Special-purpose connectors**

- ❒ snap together individually
- ❒ 5.08 mm spacing
- ❒ securely fixed to the printed circuit board by double solder tails
- ❒ feed through connector
- ❒ knife edge disconnect block
- ❒ fuse block with G fuse insert and integrated return conductor
- ❒ test plug for 2 mm or 3 mm test plug

**Note:**

The information regarding cross sectional areas and connection types pertains to connections without ferrules.

The indicated rated current corresponds to the maximum load for the PC board with connected wire of the indicated rated cross section.

The rated voltage is indicated as per DIN VDE 0110 part 1 (IEC 60 664-1) – insulation coordination for electrical material in low voltage application – and refers to the delivered state of the PC board connector.

Before the PC board is fitted with connectors, an appropriate PC board must be selected and dimensioned accordingly (e.g. regarding tracking resistance of the lines and solder joints).

Furthermore, the ambient conditions under which the materials shall be used, must be considered.

The indicated rated voltages will be valid for the complete module only if the printed circuit board and PC board connectors are correctly and clearly adjusted to each other.

# wiecon PCB

## PC board connectors

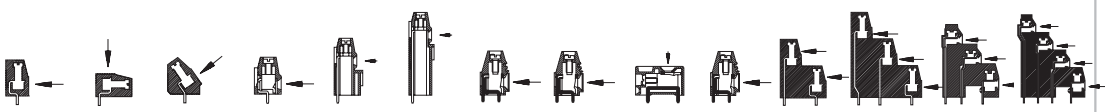

| Cross section (fine stranded) | Spacing | Rising cage clamp | | | | | | | | | | | | | |
|---|---|---|---|---|---|---|---|---|---|---|---|---|---|---|---|
| 1 mm² | 3.50 | 8593 p. 336 | | | | | | | | | | | | | |
| | 3.81 | 8893 p. 336 | | | | | | | | | | | | | |
| | | | | | | | | | | | | | | | |
| 1.5 mm² | 5.00/ 10.00 | 8192 p. 338 | 8192 ZW p. 339 | 8134 p. 360 | | | | | | | | 8192 E p. 364 | | 8195 D p. 372 | 8195 V p. 375 |
| | 5.08 | 8292 p. 338 | 8292 ZW p. 339 | 8234 p. 360 | 8292 H p. 341 | 8292 EH p. 340 | 8292 DH p. 340 | | | | | 8292 E p. 364 | | | |
| | 7.50 | | | | | | | | | | | | | | |
| | 7.62 | | | | | | | | | | | | | | |
| 2.5 mm² | 5.00/ 10.00 | 8190 p. 358 8191 p. 344 | 8191 ZW p. 345 | 8135 p. 362 | | | | | | | | 8190 E p. 368 8191 E p. 357 | 8191 D p. 357 | | |
| | 5.00 | 8191 R p. 342 | 8191 p. 344 | | | | | | | | | | | 8195 D p. 372 | 8195 V p. 373 |
| | 5.08 | 8291 R p. 342 8291 p. 357 | 8291 ZW p. 357 | 8235 p. 357 | | | | | | | | 8291 E p. 357 | 8291 D p. 357 | | |
| | 7.50 | 8390 p. 359 8491 p. 346 | 8391 ZW p. 347 | | | | | | | | | | | | |
| | 7.62 | 8491 p. 346 | 8491 ZW p. 347 | | | | | | | | | | | | |
| 4 mm² | 6.35 | | | | | | | | | | | | | | |
| | 7.50 | | | | | | | | | | | | | | |
| | 7.62 | | | | | | | | | | | | | | |
| | 10.00 | | | | | | | | | | | | | | |
| 10 mm² | 10.16 | | | | | | | 7572 L2 p. 376 | 7572 L4 p. 376 | 7573 L2/W p. 375 | | | | | |
| | 20.32 | | | | | | | | | | 7572 L2 p. 376 | | | | |

| TOP connection | | | Special-purpose connectors | | | | | | Spring clamp connectors | | | | |
|---|---|---|---|---|---|---|---|---|---|---|---|---|---|
| | | | | | | | | | | | | | |
| | | | | | | | | | | | | | |
| | | | | | | | | | | | | | |
| | | | | | | | | | | | | **8152** TOP V p. 348 | **8152** TOP H p. 348 |
| | | | | | | | | | | | | **8152** TOP V p. 348 | **8152** TOP H p. 348 |
| | | | | | | | | | | | | | |
| | | | | | | | | | | | | | |
| | | | | | | | | | | | | | |
| **8185** TOP V p. 349 | **8185** TOP H p. 350 | | | | | | | | **8158** TOP V p. 353 | **8158** TOP H p. 353 | | | |
| **8285** TOP V p. 349 | **8285** TOP H p. 350 | | | | | **8276** p. 378 | **8276** TKS p. 378 | **8276** Si-D p. 379 | **8258** TOP V p. 353 | **8258** TOP H p. 353 | | | |
| **8385** TOP V p. 351 | **8385** TOP H p. 352 | | | | | | | | **8358** TOP V p. | **8358** TOP H p. | | | |
| **8485** TOP V p. 351 | **8485** TOP H p. 352 | | | | | | | | **8458** TOP V p. 354 | **8458** TOP H p. 354 | | | |
| | | | **7386** TOP H p. 355 | | | | | | | | | | |
| | | **8375** p. 374 | | | | | | | | | | | |
| | | | | **8486** TOP H p. 356 | **8486** TOP V p. 356 | | | | | | | | |
| | | **8375** p. 374 | | | | | | | | | | | |
| | | | | | | | | | | | | | |
| | | | | | | | | | | | | | |

IERTES
0 9001
SSICHERUNGSSYSTEM
-Nr. 14 194-02

# PC board connectors, rising cage clamp system
# Spacing: 3.50/3.81 mm

**wiecon** PCB

Rated cross section:
1.0 mm²

Rated current:
10 A

Connection range:
0.14 – 1.5 mm² solid/
0.14 – 1.0 mm² fine stranded

160 V/2.5 kV/3 – Overvoltage category III
*250 V/2.5 kV/2 – Overvoltage category II
**690 V/2.5 kV/1 – Overvoltage category I

**without** insulating plate

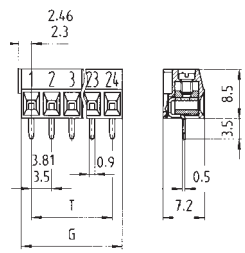


**with** insulating plate

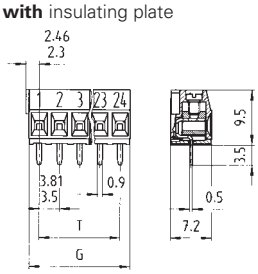


Solder pin 0.5 x 0.9 mm
Bore hole Ø 1.1 mm

* up to 400 V in overvoltage category I
or expected overvoltage ≤ 3 kV
for L ≥ 2.0 mm and ≤ 2.5 kV für 2.0 mm > L ≥ 1.5 mm

** max. 600 V overvoltage expected
overvoltage ≤ 3 kV for L ≥ 2.0 mm and
≤ 2.5 kV for 2.0 mm > L ≥ 1.5 mm

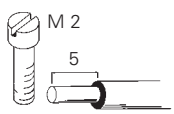


**Type 8593/8893**
wire horizontal to PC board

Material:
Insulating housing:
PA 66/6 gray, UL 94-V-2
Clamping body: nickel-plated brass
Contact clip with solder pin:
tin-plated bronze
Clamping screw: zinc-plated steel
Brass Nickel-plated
available upon request

| | | |
|---|---|---|
| Rated voltages VDE 0110 | | |
| UL ratings | No. 30 – 16 AWG | 300 V 10 A |
| CSA ratings | No. 30 – 16 AWG | 300 V 10 A |
| Approvals | | |

| Std. pack | L | T | Poles | Part no. | Part no. | Part no. | Part no. |
|---|---|---|---|---|---|---|---|
| **Spacing: 3.50 mm** | | | | unmarked without insulating plate | marked without insulating plate | unmarked with insulating plate with fixing bolts | marked with insulating plate with fixing bolts |
| 100 | 7.0 | 3.5 | 2 | 25.195.0253.0 | 25.194.0253.0 | 25.195.9253.0 | 25.194.9253.0 |
| 100 | 10.5 | 7.0 | 3 | 25.195.0353.0 | 25.194.0353.0 | 25.195.9353.0 | 25.194.9353.0 |
| 50 | 14.0 | 10.5 | 4 | 25.195.0453.0 | 25.194.0453.0 | | |
| 50 | 17.5 | 14.0 | 5 | 25.195.0553.0 | 25.194.0553.0 | | |
| 50 | 21.0 | 17.5 | 6 | 25.195.0653.0 | 25.194.0653.0 | | |
| 50 | 24.5 | 21.0 | 7 | 25.195.0753.0 | 25.194.0753.0 | | |
| 50 | 28.0 | 24.5 | 8 | 25.195.0853.0 | 25.194.0853.0 | | |
| 50 | 31.5 | 28.0 | 9 | 25.195.0953.0 | 25.194.0953.0 | | |
| 50 | 35.0 | 31.5 | 10 | 25.195.1053.0 | 25.194.1053.0 | | |
| 50 | 38.5 | 35.0 | 11 | 25.195.1153.0 | 25.194.1153.0 | | |
| 50 | 42.0 | 38.5 | 12 | 25.195.1253.0 | 25.194.1253.0 | | |
| 50 | 45.5 | 42.0 | 13 | 25.195.1353.0 | 25.194.1353.0 | | |
| 50 | 49.0 | 45.5 | 14 | 25.195.1453.0 | 25.194.1453.0 | | |
| 50 | 52.5 | 49.0 | 15 | 25.195.1553.0 | 25.194.1553.0 | | |
| 50 | 56.0 | 52.5 | 16 | 25.195.1653.0 | 25.194.1653.0 | | |
| 17 to 24pole upon request | | | | | | | |
| **Spacing: 3.81 mm** | | | | unmarked without insulating plate | marked without insulating plate | unmarked with insulating plate with fixing bolts | marked with insulating plate with fixing bolts |
| 100 | 7.62 | 3.81 | 2 | 25.197.0253.0 | 25.196.0253.0 | 25.197.9253.0 | 25.196.9253.0 |
| 100 | 11.43 | 7.62 | 3 | 25.197.0353.0 | 25.196.0353.0 | 25.197.9353.0 | 25.196.9353.0 |
| 50 | 15.24 | 11.43 | 4 | 25.197.0453.0 | 25.196.0453.0 | | |
| 50 | 19.50 | 15.24 | 5 | 25.197.0553.0 | 25.196.0553.0 | | |
| 50 | 22.86 | 19.05 | 6 | 25.197.0653.0 | 25.196.0653.0 | | |
| 50 | 26.67 | 22.86 | 7 | 25.197.0753.0 | 25.196.0753.0 | | |
| 50 | 30.48 | 26.67 | 8 | 25.197.0853.0 | 25.196.0853.0 | | |
| 50 | 34.29 | 30.48 | 9 | 25.197.0953.0 | 25.196.0953.0 | | |
| 50 | 38.10 | 34.29 | 10 | 25.197.1053.0 | 25.196.1053.0 | | |
| 50 | 41.91 | 38.10 | 11 | 25.197.1153.0 | 25.196.1153.0 | | |
| 50 | 45.72 | 41.91 | 12 | 25.197.1253.0 | 25.196.1253.0 | | |
| 50 | 49.53 | 45.72 | 13 | 25.197.1353.0 | 25.196.1353.0 | | |
| 50 | 53.34 | 49.53 | 14 | 25.197.1453.0 | 25.196.1453.0 | | |
| 50 | 57.15 | 53.34 | 15 | 25.197.1553.0 | 25.196.1553.0 | | |
| 50 | 60.96 | 57.15 | 16 | 25.197.1653.0 | 25.196.1653.0 | | |
| 17 to 24pole upon request | | | | | | | |

**with** insulating plate **with** fixing bolts

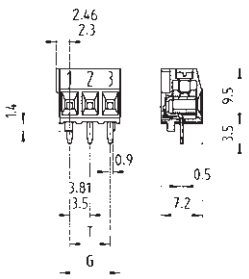


**Bore hole** plan for version **with** fixing bolts

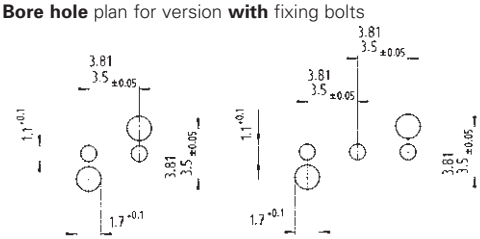


| Part no. | Part no. |
|---|---|
| unmarked<br>with insulating plate<br>without fixing bolts | marked<br>with insulating plate<br>without fixing bolts |
| upon request | upon request |
| | |
| | |
| | |
| | |
| | |
| unmarked<br>with insulating plate<br>without fixing bolts | marked<br>with insulating plate<br>without fixing bolts |
| upon request | upon request |
| | |
| | |
| | |
| | |
| | |

# PC board connectors, rising cage clamp system
# Spacing: 5.00/5.08 mm

**wiecon** PCB

Rated cross section:
1.5 mm²

Rated current:
10 A

Connection range:
0.14 – 2.5 mm² solid/
0.14 – 1.5 mm² fine stranded

250 V/4 kV/3 – Overvoltage category III
*690 V/4 kV/2 – Overvoltage category II
1000 V/4 kV/1 – Overvoltage category I

**without** insulating plate

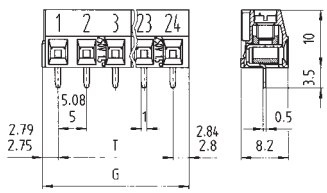


**with** insulating plate

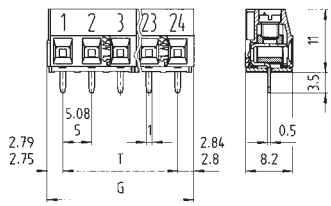


* max. 600 V for ungrounded networks or expected overvoltage ≤ 4 kV

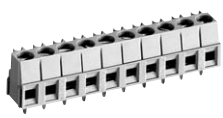

**Type 8192/8292**
wire horizontal to PC board

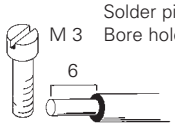


Solder pin 0.5 x 1 mm
Bore hole Ø 1.2 mm

Material:
Insulating housing:
PA 66/6 gray, UL 94-V0
Clamping body: nickel-plated brass
Contact clip with solder pin:
tin-plated bronze
Clamping screw: zinc-plated steel
Brass Nickel-plated
available upon request

| | | |
|---|---|---|
| Rated voltages VDE 0110 | | |
| UL ratings | No. 30 – 14 AWG | 300 V 15/16 A |
| CSA ratings | No. 30 – 14 AWG | 300 V 15 A |
| Approvals | | |

| Std. pack | G | T | Poles | Part no. | Part no. | Part no. | Part no. |
|---|---|---|---|---|---|---|---|
| **Spacing: 5.00 mm** | | | | unmarked without insulating plate | marked without insulating plate | unmarked with insulating plate with fixing bolts | marked with insulating plate with fixing bolts |
| 100 | 10.55 | 5 | 2 | 25.191.0253.0 | 25.190.0253.0 | 25.191.9253.0 | 25.190.9253.0 |
| 100 | 15.55 | 10 | 3 | 25.191.0353.0 | 25.190.0353.0 | 25.191.9353.0 | 25.190.9353.0 |
| 50 | 20.55 | 15 | 4 | 25.191.0453.0 | 25.190.0453.0 | | |
| 50 | 25.55 | 20 | 5 | 25.191.0553.0 | 25.190.0553.0 | | |
| 50 | 30.55 | 25 | 6 | 25.191.0653.0 | 25.190.0653.0 | | |
| 50 | 35.55 | 30 | 7 | 25.191.0753.0 | 25.190.0753.0 | | |
| 50 | 40.55 | 35 | 8 | 25.191.0853.0 | 25.190.0853.0 | | |
| 50 | 45.55 | 40 | 9 | 25.191.0953.0 | 25.190.0953.0 | | |
| 50 | 50.55 | 45 | 10 | 25.191.1053.0 | 25.190.1053.0 | | |
| 50 | 55.55 | 50 | 11 | 25.191.1153.0 | 25.190.1153.0 | | |
| 50 | 60.55 | 55 | 12 | 25.191.1253.0 | 25.190.1253.0 | | |
| 50 | 65.55 | 60 | 13 | 25.191.1353.0 | 25.190.1353.0 | | |
| 50 | 70.55 | 65 | 14 | 25.191.1453.0 | 25.190.1453.0 | | |
| 50 | 75.55 | 70 | 15 | 25.191.1553.0 | 25.190.1553.0 | | |
| 50 | 80.55 | 75 | 16 | 25.191.1653.0 | 25.190.1653.0 | | |
| 17 to 24pole upon request | | | | | | | |
| **Spacing: 5.08 mm** | | | | unmarked without insulating plate | marked without insulating plate | unmarked with insulating plate with fixing bolts | marked with insulating plate with fixing bolts |
| 100 | 10.71 | 5.08 | 2 | 25.193.0253.0 | 25.192.0253.0 | 25.193.9253.0 | 25.192.9253.0 |
| 100 | 15.79 | 10.16 | 3 | 25.193.0353.0 | 25.192.0353.0 | 25.193.9353.0 | 25.192.9353.0 |
| 50 | 20.87 | 15.24 | 4 | 25.193.0453.0 | 25.192.0453.0 | | |
| 50 | 25.95 | 20.32 | 5 | 25.193.0553.0 | 25.192.0553.0 | | |
| 50 | 31.03 | 25.40 | 6 | 25.193.0653.0 | 25.192.0653.0 | | |
| 50 | 36.11 | 30.48 | 7 | 25.193.0753.0 | 25.192.0753.0 | | |
| 50 | 41.19 | 35.56 | 8 | 25.193.0853.0 | 25.192.0853.0 | | |
| 50 | 46.27 | 40.64 | 9 | 25.193.0953.0 | 25.192.0953.0 | | |
| 50 | 51.35 | 45.72 | 10 | 25.193.1053.0 | 25.192.1053.0 | | |
| 50 | 56.43 | 50.80 | 11 | 25.193.1153.0 | 25.192.1153.0 | | |
| 50 | 61.51 | 55.88 | 12 | 25.193.1253.0 | 25.192.1253.0 | | |
| 50 | 66.59 | 60.96 | 13 | 25.193.1353.0 | 25.192.1353.0 | | |
| 50 | 71.67 | 66.04 | 14 | 25.193.1453.0 | 25.192.1453.0 | | |
| 50 | 76.75 | 71.12 | 15 | 25.193.1553.0 | 25.192.1553.0 | | |
| 50 | 81.83 | 76.20 | 16 | 25.193.1653.0 | 25.192.1653.0 | | |
| 17 to 24pole upon request | | | | | | | |

**with** insulating plate **with** fixing bolts

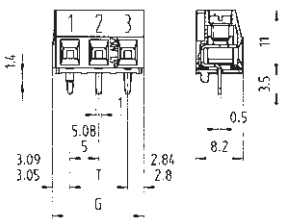


**with** insulating plate horizontal

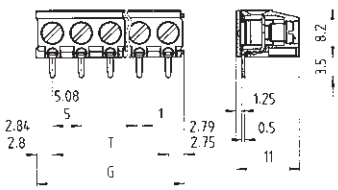


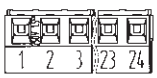


**Bore hole** plan for version **with** fixing bolts

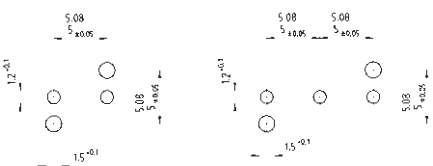


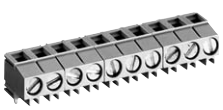

Solder pin 0.5 x 1 mm
Bore hole Ø 1.2 mm

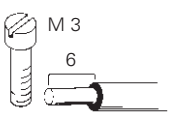


## Type 8192 ZW/8292 ZW

Wire vertical to PC board

| | | |
|---|---|---|
| No. 30 – 14 AWG | 300 V | 15/16 A |
| No. 30 – 14 AWG | 300 V | 15 A |

| Part no. | Part no. | | |
|---|---|---|---|
| unmarked<br>with insulating plate<br>without fixing bolts | marked<br>with insulating plate<br>without fixing bolts | unmarked<br>with insulating plate<br>horizontal | marked<br>with insulating plate<br>horizontal |
| upon request | upon request | 25.191.6253.0<br>25.191.6353.0<br>25.191.6453.0 | upon request |
| | | 25.191.6553.0<br>25.191.6653.0<br>25.191.6753.0 | |
| | | 25.191.6853.0<br>25.191.6953.0<br>25.191.7053.0 | |
| | | 25.191.7153.0<br>25.191.7253.0<br>25.191.7353.0 | |
| | | 25.191.7453.0<br>25.191.7553.0<br>25.191.7653.0 | |
| | | | |
| unmarked<br>with insulating plate<br>without fixing bolts | marked<br>with insulating plate<br>without fixing bolts | unmarked<br>with insulating plate<br>horizontal | marked<br>with insulating plate<br>horizontal |
| upon request | upon request | 25.193.6253.0<br>25.193.6353.0<br>25.193.6453.0 | upon request |
| | | 25.193.6553.0<br>25.193.6653.0<br>25.193.6753.0 | |
| | | 25.193.6853.0<br>25.193.6953.0<br>25.193.7053.0 | |
| | | 25.193.7153.0<br>25.193.7253.0<br>25.193.7353.0 | |
| | | 25.193.7453.0<br>25.193.7553.0<br>25.193.7653.0 | |
| | | | |

# wiecon PCB

Rated cross section:
1.5 mm²

Rated current 15 A for type 8292 DH
Rated current 15 A for type 8292 EH
Rated current 15 A for type 8292 H
(related to an ambient temperature of 20 °C, the rated cross section and max. number of poles)

Connection range:
0.5 – 1.5 mm² solid/fine stranded

250 V/4 kV/3 – Overvoltage category III
250 V/4 kV/2 – Overvoltage category II
500 V/4 kV/1 – Overvoltage category I

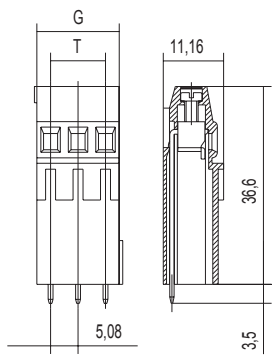


Solder pin 0.8 x 1 mm
Bore hole Ø 1.3 mm

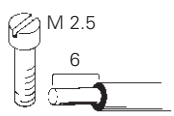

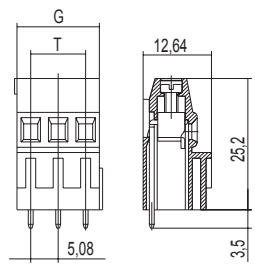


Solder pin 0.8 x 1 mm
Bore hole Ø 1.3 mm

| | | Type 8292 DH | | | Type 8292 EH | | |
|---|---|---|---|---|---|---|---|
| Rated voltages VDE 0110 | | | | | | | |
| UL ratings | field wiring | No. 24 – 14 AWG | 300 V | 10 A | No. 24 – 14 AWG | 300 V | 10 A |
| CSA ratings | | No. 24 – 14 AWG | 300 V | 10 A | No. 24 – 14 AWG | 300 V | 10 A |
| Approvals | | | | | | | |

| Std. pack | G | T | Poles | Part no. | Part no. | Part no. | Part no. |
|---|---|---|---|---|---|---|---|
| **Spacing: 5.08 mm** | | | | unmarked | | unmarked | |
| 100 | 10.16 | 5.08 | 2 | 27.000.4253.0 | | 27.000.2253.0 | |
| 100 | 15.24 | 10.16 | 3 | 27.000.4353.0 | | 27.000.2353.0 | |
| | | | | | | | |
| | | | | | | | |
| | | | | | | | |
| | | | | | | | |
| | | | | Customers are advised to ensure support for the 8292 DH | | Customers are advised to ensure support for the 8292 EH | |

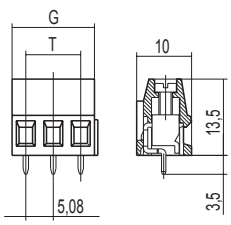


Solder pin 0.8 x 1 mm
Bore hole Ø 1.3 mm

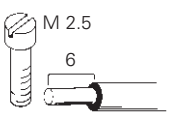


## Type 8292 H

| | | |
|---|---|---|
| No. 24 – 14 AWG | 300 V | 10 A |
| No. 24 – 14 AWG | 300 V | 10 A |

| Part no. | Part no. |
|---|---|
| unmarked | |
| 27.000.0253.0<br>27.000.0353.0 | |
| | |
| | |
| | |
| | |

# PC board connectors, rising cage clamp system
# Spacing: 5.00/5.08 mm

**wiecon** PCB

Rated cross section:
2.5 mm²

Rated current:
16 A

Connection range:
0.14 – 4.0 mm² solid/
0.14 – 2.5 mm² fine stranded

250 V/4 kV/3 – Overvoltage category III
*690 V/4 kV/2 – Overvoltage category II
1000 V/4 kV/1 – Overvoltage category I

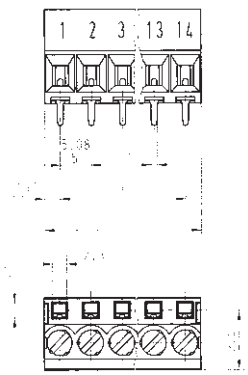


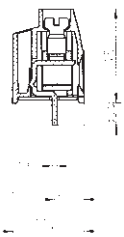

Material:
Insulating housing:
PA 66/6 gray, UL 94-V0
Clamping body: nickel-plated brass
Contact clip with solder pin:
tin-plated E copper
Clamping screw: zinc-plated steel

* max. 600 V for ungrounded networks or expected overvoltage ≤ 4 kV

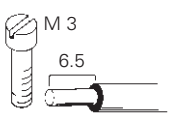


Solder pin 1 x 0.8 mm
Bore hole Ø 1.3 mm

Upon request also with Philips screw

**Type 81 – 8291 R**
wire horizontal to PC board
(with integrated test point)

| | | | |
|---|---|---|---|
| Rated voltages VDE 0110 | | | |
| UL ratings | No. 22 – 12 AWG | 300 V | 20/30 A |
| CSA ratings | No. 22 – 12 AWG | 300 V | 25 A |
| Approvals | | | |

| Std. pack | G | T | Poles | Part no. | Part no. |
|---|---|---|---|---|---|
| **Spacing: 5.00 mm** | | **Type 8191 R** | | unmarked with insulating plate | marked with insulating plate |
| 500 | 10.85 | 5 | 2 | 25.155.0253.0 | 25.155.2253.0 |
| 500 | 15.85 | 10 | 3 | 25.155.0353.0 | 25.155.2353.0 |
| 250 | 20.85 | 15 | 4 | 25.155.0453.0 | 25.155.2453.0 |
| 250 | 25.85 | 20 | 5 | 25.155.0553.0 | 25.155.2553.0 |
| 200 | 30.85 | 25 | 6 | 25.155.0653.0 | 25.155.2653.0 |
| 200 | 35.85 | 30 | 7 | 25.155.0753.0 | 25.155.2753.0 |
| 100 | 40.85 | 35 | 8 | 25.155.0853.0 | 25.155.2853.0 |
| 100 | 45.85 | 40 | 9 | 25.155.0953.0 | 25.155.2953.0 |
| 100 | 50.85 | 45 | 10 | 25.155.1053.0 | 25.155.3053.0 |
| 50 | 55.85 | 50 | 11 | 25.155.1153.0 | 25.155.3153.0 |
| 50 | 60.85 | 55 | 12 | 25.155.1253.0 | 25.155.3253.0 |
| 50 | 66.85 | 60 | 13 | 25.155.1353.0 | 25.155.3353.0 |
| 50 | 70.85 | 65 | 14 | 25.155.1453.0 | 25.155.3453.0 |
| **Spacing: 5.08 mm** | | **Type 8291 R** | | unmarked with insulating plate | marked with insulating plate |
| 500 | 11.01 | 5.08 | 2 | 25.156.0253.0 | 25.156.2253.0 |
| 500 | 16.09 | 10.16 | 3 | 25.156.0353.0 | 25.156.2353.0 |
| 250 | 21.17 | 15.24 | 4 | 25.156.0453.0 | 25.156.2453.0 |
| 250 | 26.25 | 20.32 | 5 | 25.156.0553.0 | 25.156.2553.0 |
| 200 | 31.33 | 25.40 | 6 | 25.156.0653.0 | 25.156.2653.0 |
| 200 | 36.41 | 30.48 | 7 | 25.156.0753.0 | 25.156.2753.0 |
| 100 | 41.49 | 35.56 | 8 | 25.156.0853.0 | 25.156.2853.0 |
| 100 | 46.57 | 40.64 | 9 | 25.156.0953.0 | 25.156.2953.0 |
| 100 | 51.56 | 45.72 | 10 | 25.156.1053.0 | 25.156.3053.0 |
| 50 | 56.73 | 50.80 | 11 | 25.156.1153.0 | 25.156.3153.0 |
| 50 | 61.81 | 55.88 | 12 | 25.156.1253.0 | 25.156.3253.0 |
| 50 | 66.89 | 60.96 | 13 | 25.156.1353.0 | 25.156.3353.0 |
| 50 | 71.97 | 66.04 | 14 | 25.156.1453.0 | 25.156.3453.0 |

# PC board connectors, rising cage clamp system
# Spacing: 10.00/10.16 mm

Rated cross section:
2.5 mm²

Rated current:
16 A

Connection range:
0.14 – 4.0 mm² solid/
0.14 – 2.5 mm² fine stranded

690 V/8 kV/3 – Overvoltage category III
1000 V/8 kV/2 – Overvoltage category II
1000 V/8 kV/1 – Overvoltage category I

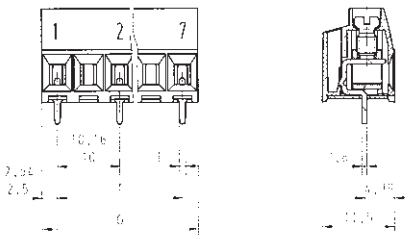

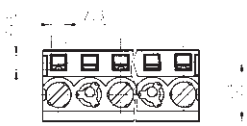

Material:
Insulating housing:
PA 66/6 gray, UL 94-V0
Clamping body: nickel-plated brass
Contact clip with solder pin:
tin-plated E copper
Clamping screw: zinc-plated steel

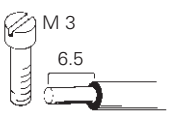


Solder pin 1 x 0.8 mm
Bore hole Ø 1.3 mm

Upon request also with Philips screw

**Type 81 – 8291 R**
wire horizontal to PC board
(with integrated test point, every second pole fitted)

| | | | |
|---|---|---|---|
| Rated voltages VDE 0110 | | | |
| UL ratings | No. 22 – 12 AWG | 600 V | 20/30 A |
| CSA ratings | No. 22 – 12 AWG | 600 V | 25 A |
| Approvals | | | |

| Std. pack | G | T | Poles | Part no. | Part no. |
|---|---|---|---|---|---|
| **Spacing: 10.00 mm** | | **Type 8191 R** | | unmarked<br>with insulating plate | marked<br>with insulating plate |
| 500 | 15 | 10 | 2 | 25.157.0253.0 | 25.157.1253.0 |
| 250 | 25 | 20 | 3 | 25.157.0353.0 | 25.157.1353.0 |
| 200 | 35 | 30 | 4 | 25.157.0453.0 | 25.157.1453.0 |
| 100 | 45 | 40 | 5 | 25.157.0553.0 | 25.157.1553.0 |
| 50 | 55 | 50 | 6 | 25.157.0653.0 | 25.157.1653.0 |
| 50 | 65 | 60 | 7 | 25.157.0753.0 | 25.157.1753.0 |
| **Spacing: 10.16 mm** | | **Type 8291 R** | | unmarked<br>with insulating plate | marked<br>with insulating plate |
| 500 | 15.24 | 10.16 | 2 | 25.157.4253.0 | 25.157.5253.0 |
| 250 | 25.40 | 20.32 | 3 | 25.157.4353.0 | 25.157.5353.0 |
| 200 | 35.56 | 30.48 | 4 | 25.157.4453.0 | 25.157.5453.0 |
| 100 | 45.72 | 40.64 | 5 | 25.157.4553.0 | 25.157.5553.0 |
| 50 | 55.88 | 50.80 | 6 | 25.157.4653.0 | 25.157.5653.0 |
| 50 | 66.04 | 60.96 | 7 | 25.157.4753.0 | 25.157.5753.0 |

# PC board connectors, rising cage clamp system
# Spacing: 5.00/5.08/10.00 mm

**wiecon** PCB

Rated cross section:
2.5 mm²

Rated current:
16 A

Connection range:
0.14 – 4.0 mm² solid/
0.14 – 2.5 mm² fine stranded

Rated voltages:
Spacing: 5.00/5.08 mm VDE 0110
250 V/4 kV/3 – Overvoltage category III
*690 V/4 kV/2 – Overvoltage category II
1000 V/4 kV/1 – Overvoltage category I

Rated voltages:
Spacing: 10.00 mm VDE 0110
690 V/8 kV/3 – Overvoltage category III
1000 V/8 kV/2 – Overvoltage category II
1000 V/8 kV/1 – Overvoltage category I

* max. 600 V for ungrounded networks or expected overvoltage ≤ 4 kV

**Spacing: 5.00/5.08 mm, without** insulating plate

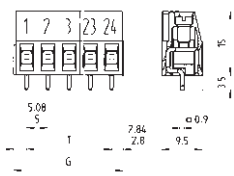

**with** insulating plate, **without** fixing bolts

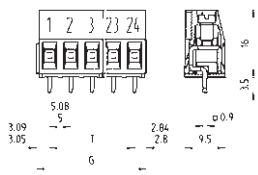

**Spacing: 10.00 mm, without** insulating plate

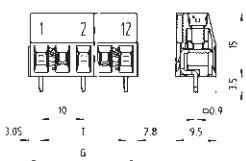

**with** insulating plate, **without** fixing bolts

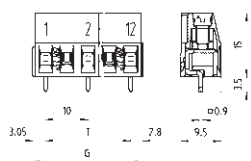

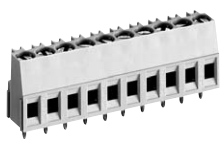

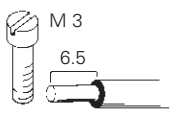


Solder pin 0.9 x 0.9 mm
Bore hole Ø 1.3 mm

**Type 8191/8291**
wire horizontal to PC board
(with exposed test point)

| | | | |
|---|---|---|---|
| Rated voltages VDE 0110 | | | |
| UL ratings | field/factory wiring | No. 22 – 12 AWG | 300 V 20/30 A |
| CSA ratings | | No. 22 – 12 AWG | 300 V 25 A |
| Approvals | | | |

| Std. pack | G | T | Poles | Part no. unmarked without insulating plate | Part no. marked without insulating plate | Part no. unmarked with insulating plate with fixing bolts | Part no. marked with insulating plate with fixing bolts |
|---|---|---|---|---|---|---|---|
| **Spacing: 5.00 mm** | | | | | | | |
| 100 | 10.85 | 5 | 2 | 25.161.0253.0 | 25.160.0253.0 | 25.171.0253.0 | 25.170.0253.0 |
| 100 | 15.85 | 10 | 3 | 25.161.0353.0 | 25.160.0353.0 | 25.171.0353.0 | 25.170.0353.0 |
| 50 | 20.85 | 15 | 4 | 25.161.0453.0 | 25.160.0453.0 | | |
| 50 | 25.85 | 20 | 5 | 25.161.0553.0 | 25.160.0553.0 | | |
| 50 | 30.85 | 25 | 6 | 25.161.0653.0 | 25.160.0653.0 | | |
| 50 | 35.85 | 30 | 7 | 25.161.0753.0 | 25.160.0753.0 | | |
| 50 | 40.85 | 35 | 8 | 25.161.0853.0 | 25.160.0853.0 | | |
| 50 | 45.85 | 40 | 9 | 25.161.0953.0 | 25.160.0953.0 | | |
| 50 | 50.85 | 45 | 10 | 25.161.1053.0 | 25.160.1053.0 | | |
| 50 | 55.85 | 50 | 11 | 25.161.1153.0 | 25.160.1153.0 | | |
| 50 | 60.85 | 55 | 12 | 25.161.1253.0 | 25.160.1253.0 | | |
| 50 | 65.85 | 60 | 13 | 25.161.1353.0 | 25.160.1353.0 | | |
| 50 | 70.85 | 65 | 14 | 25.161.1453.0 | 25.160.1453.0 | | |
| 50 | 75.85 | 70 | 15 | 25.161.1553.0 | 25.160.1553.0 | | |
| 50 | 80.85 | 75 | 16 | 25.161.1653.0 | 25.160.1653.0 | | |
| 17 to 24pole upon request | | | | | | | |
| **Spacing: 5.08 mm** | | | | | | | |
| 100 | 11.01 | 5.08 | 2 | 25.163.0253.0 | | 25.173.0253.0 | 25.172.0253.0 |
| 100 | 16.09 | 10.16 | 3 | 25.163.0353.0 | | 25.173.0353.0 | 25.172.0353.0 |
| 50 | 21.17 | 15.24 | 4 | 25.163.0453.0 | | | |
| 50 | 26.25 | 20.32 | 5 | 25.163.0553.0 | | | |
| 50 | 31.33 | 25.40 | 6 | 25.163.0653.0 | | | |
| 50 | 36.41 | 30.48 | 7 | 25.163.0753.0 | | | |
| 50 | 41.49 | 35.56 | 8 | 25.163.0853.0 | | | |
| 50 | 46.57 | 40.64 | 9 | 25.163.0953.0 | | | |
| 50 | 51.65 | 45.72 | 10 | 25.163.1053.0 | | | |
| 50 | 56.73 | 50.80 | 11 | 25.163.1153.0 | | | |
| 50 | 61.81 | 55.88 | 12 | 25.163.1253.0 | | | |
| 50 | 66.89 | 60.96 | 13 | 25.163.1353.0 | | | |
| 50 | 71.97 | 66.04 | 14 | 25.163.1453.0 | | | |
| 50 | 77.05 | 71.12 | 15 | 25.163.1553.0 | | | |
| 50 | 82.13 | 76.20 | 16 | 25.163.1653.0 | | | |
| 17 to 24pole upon request | | | | | | | |
| **Spacing: 10.00 mm** | | | | | | | |
| 100 | 15.85 | 10 | 2 | 25.169.0253.0 | 25.168.0253.0 | 25.169.6253.0 | 25.168.6253.0 |
| 4 to 12pole upon requ. 50 | 25.85 | 20 | 3 | 25.169.0353.0 | 25.168.0353.0 | 25.169.6353.0 | 25.168.6353.0 |

**with** insulating plate **with** fixing bolts

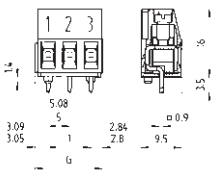

**with** insulating plate **with** fixing bolts

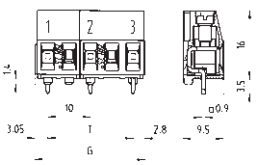

**with** insulating plate horizontal 5.00/5.08 mm

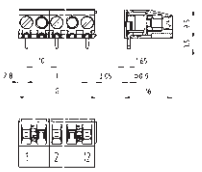

**with** insulating plate horizontal 10.00 mm

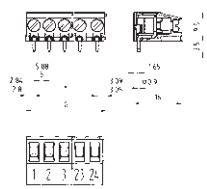

**Bore hole** plan for version with fixing bolts, spacing: 5.00/5.08 mm

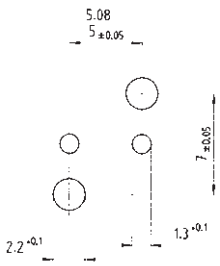

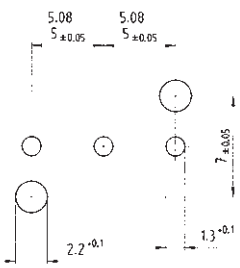

Material:
Insulating housing:
PA 66/6 gray, UL 94-V0
Clamping body: nickel-plated brass
Contact clip with solder pin:
tin-plated E copper
Clamping screw: zinc-plated steel
Brass Nickel-plated
available upon request

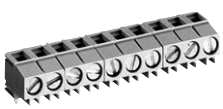

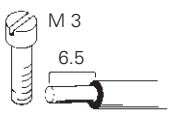


Solder pin 0.9 x 0.9 mm
Bore hole Ø 1.3 mm

## Type 8191 ZW/8291 ZW

wire vertical to PC board

| | | |
|---|---|---|
| No. 22 – 12 AWG | 300 V | 20/30 A |
| No. 22 – 12 AWG | 300 V | 25 A |

**Bore hole** plan for version **with** fixing bolts, spacing: 10.00 mm

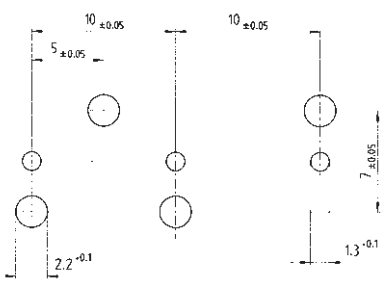

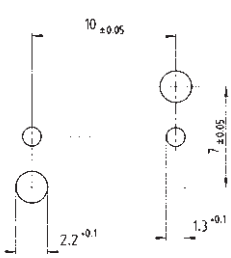

| Part no. | Part no. | Part no. | Part no. |
|---|---|---|---|
| unmarked<br>with insulating plate<br>without fixing bolts | marked<br>with insulating plate<br>without fixing bolts | unmarked<br>with insulating plate<br>horizontal | marked<br>with insulating plate<br>horizontal |
| upon request | upon request | 25.161.6253.0<br>25.161.6353.0<br>25.161.6453.0 | 25.160.6253.0<br>25.160.6353.0<br>25.160.6453.0 |
| | | 25.161.6553.0<br>25.161.6653.0<br>25.161.6753.0 | 25.160.6553.0<br>25.160.6653.0<br>25.160.6753.0 |
| | | 25.161.6853.0<br>25.161.6953.0<br>25.161.7053.0 | 25.160.6853.0<br>25.160.6953.0<br>25.160.7053.0 |
| | | 25.161.7153.0<br>25.161.7253.0<br>25.161.7353.0 | 25.160.7153.0<br>25.160.7253.0<br>25.160.7353.0 |
| | | 25.161.7453.0<br>25.161.7553.0<br>25.161.7653.0 | 25.160.7453.0<br>25.160.7553.0<br>25.160.7653.0 |
| | | | |
| upon request | upon request | 25.163.6253.0<br>25.163.6353.0<br>25.163.6453.0 | 25.162.6253.0<br>25.162.6353.0<br>25.162.6453.0 |
| | | 25.163.6553.0<br>25.163.6653.0<br>25.163.6753.0 | 25.162.6553.0<br>25.162.6653.0<br>25.162.6753.0 |
| | | 25.163.6853.0<br>25.163.6953.0<br>25.163.7053.0 | 25.162.6853.0<br>25.162.6953.0<br>25.162.7053.0 |
| | | 25.163.7153.0<br>25.163.7253.0<br>25.163.7353.0 | 25.162.7153.0<br>25.162.7253.0<br>25.162.7353.0 |
| | | 25.163.7453.0<br>25.163.7553.0<br>25.163.7653.0 | 25.162.7453.0<br>25.162.7553.0<br>25.162.7653.0 |
| | | | |
| 25.169.2253.0<br>25.169.2353.0 | 25.168.2253.0<br>25.168.2353.0 | 25.169.4253.0<br>25.169.4353.0 | 25.168.4253.0<br>25.168.4353.0 |

# PC board connectors, rising cage clamp system
# Spacing: 7.50/7.62 mm

**wiecon** PCB

Rated cross section:
2.5 mm²

Rated current:
16 A

Connection range:
0.14 – 4.0 mm² solid/
0.14 – 2.5 mm² fine stranded

400 V/6 kV/3 – Overvoltage category III
1000 V/6 kV/2 – Overvoltage category II
1000 V/6 kV/1 – Overvoltage category I

**without** insulating plate

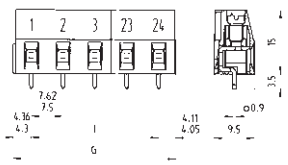

**with** insulating plate, **without** fixing bolts

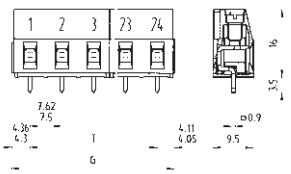

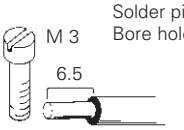


Solder pin 0.9 x 0.9 mm
Bore hole Ø 1.3 mm

**Type 8391/8491**
wire horizontal to PC board

Material
Insulating housing:
PA 66/6 gray, UL 94-V0
Clamping body: nickel-plated brass
Contact clip with solder pin:
tin-plated E copper
Clamping screw: zinc-plated steel
Brass Nickel-plated
available upon request

| | | |
|---|---|---|
| Rated voltages VDE 0110 | | |
| UL ratings | No. 22 – 12 AWG | 300 V 20/30 A |
| CSA ratings | No. 22 – 12 AWG | 300 V 25 A |
| Approvals | | |

| Std. pack | G | T | Poles | Part no. | Part no. | Part no. | Part no. |
|---|---|---|---|---|---|---|---|
| **Spacing: 7.50 mm** | | | | unmarked<br>without insulating plate | unmarked<br>with insulating plate<br>without fixing bolts | unmarked<br>with insulating plate<br>with fixing bolts | marked<br>without insulating plate |
| 100 | 15.85 | 7.5 | 2 | 25.165.0253.0 | 25.165.3253.0 | 25.175.0253.0 | 25.164.0253.0 |
| 100 | 23.35 | 15.0 | 3 | 25.165.0353.0 | 25.165.3353.0 | 25.175.0353.0 | 25.164.0353.0 |
| | 4 to 24pole upon request | | | | | | |
| | | | | | | | |
| **Spacing: 7.62 mm** | | | | unmarked<br>without insulating plate | unmarked<br>with insulating plate<br>without fixing bolts | unmarked<br>with insulating plate<br>with fixing bolts | marked<br>without insulating plate |
| 100 | 16.09 | 7.62 | 2 | 25.167.0253.0 | 25.167.3253.0 | 25.177.0253.0 | 25.166.0253.0 |
| 100 | 23.71 | 15.24 | 3 | 25.167.0353.0 | 25.167.3353.0 | 25.177.0353.0 | 25.166.0353.0 |
| | 4 to 24pole upon request | | | | | | |

**with** insulating plate **with** fixing bolts

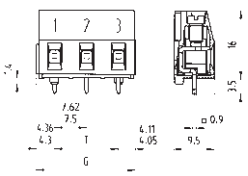

**Bore hole** plan for version **with** fixing bolts

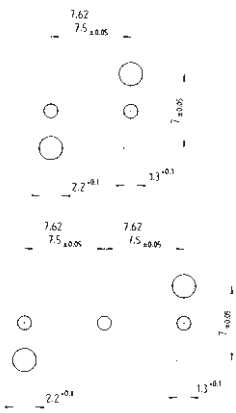

**with** insulating plate horizontal

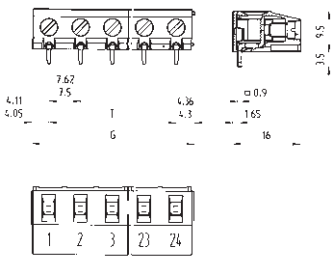

Solder pin 0.9 x 0.9 mm
Bore hole Ø 1.3 mm

## Type 8391 ZW/8491 ZW

wire vertical to PC board

| | | |
|---|---|---|
| No. 22 – 12 AWG | 300 V | 20/30 A |
| No. 22 – 12 AWG | 300 V | 25 A |

| Part no. | Part no. | Part no. | Part no. |
|---|---|---|---|
| marked<br>with insulating plate<br>without fixing bolts | marked<br>with insulating plate<br>with fixing bolts | unmarked<br>with insulating plate<br>horizontal | marked<br>with insulating plate<br>horizontal |
| 25.164.3253.0<br>25.164.3353.0 | 25.174.0253.0<br>25.174.0353.0 | 25.165.6253.0<br>25.165.6353.0 | 25.164.6253.0<br>25.164.6353.0 |
| | | | |
| | | | |
| marked<br>with insulating plate<br>without fixing bolts | marked<br>with insulating plate<br>with fixing bolts | unmarked<br>with insulating plate<br>horizontal | marked<br>with insulating plate<br>horizontal |
| 25.166.3253.0<br>25.166.3353.0 | 25.176.0253.0<br>25.176.0353.0 | 25.167.6253.0<br>25.167.6353.0 | 25.166.6253.0<br>25.166.6353.0 |
| | | | |
| | | | |
| | | | |
| | | | |
| | | | |
| | | | |
| | | | |
| | | | |

# wiecon PCB

Rated cross section:
1.5 mm²

Rated current:
16 A
(related to an ambient temperature of 20 °C,
the rated cross section and max. number of poles)

Connection range:
0.50 – 2.5 mm² solid/
0.50 – 1.5 mm² fine stranded

250 V/4 kV/3 – Overvoltage category III

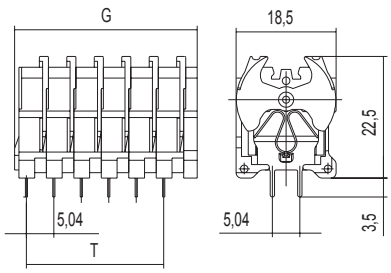


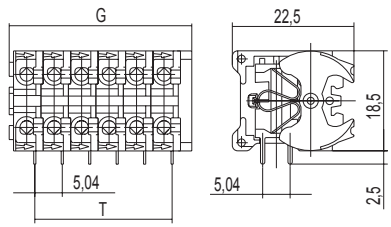


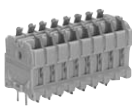

Solder pin 0.8 x 0.4 mm
Bore hole Ø 1.3 mm

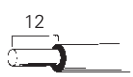

Solder pin 0.8 x 0.4 mm
Bore hole Ø 1.3 mm

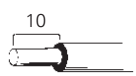


| | | | | | | | | |
|---|---|---|---|---|---|---|---|---|
| | | | | | **Type 8152 TOP V** | | **Type 8152 TOP H** | |
| Rated voltages VDE 0110 | | | | | | | | |
| UL ratings | | | | field wiring | No. 26 – 14 AWG | 300 V 10 A | No. 26 – 14 AWG | 300 V 10 A |
| CSA ratings | | | | | No. 22 – 14 AWG | 300 V 10 A | No. 22 – 14 AWG | 300 V 10 A |
| Approvals | | | | | | | | |
| Std. pack | G | T | Poles | | Part no. | | Part no. | |
| **Spacing: 5.00 mm** | | | | | | | | |
| 100 | 8.34 | 5.04 | 1 | | 27.720.0153.0 | | 27.730.0153.0 | |
| 100 | 13.38 | 10.08 | 2 | | 27.720.0253.0 | | 27.730.0253.0 | |
| 100 | 18.42 | 15.12 | 3 | | 27.720.0353.0 | | 27.730.0353.0 | |
| 50 | 23.46 | 20.16 | 4 | | 27.720.0453.0 | | 27.730.0453.0 | |
| 50 | 28.50 | 25.20 | 5 | | 27.720.0553.0 | | 27.730.0553.0 | |
| 50 | 33.54 | 30.24 | 6 | | 27.720.0653.0 | | 27.730.0653.0 | |
| 50 | 38.58 | 35.28 | 7 | | 27.720.0753.0 | | 27.730.0753.0 | |
| 50 | 43.62 | 40.32 | 8 | | 27.720.0853.0 | | 27.730.0853.0 | |
| 50 | 48.66 | 45.30 | 9 | | 27.720.0953.0 | | 27.730.0953.0 | |
| 50 | 53.70 | 50.40 | 10 | | 27.720.1053.0 | | 27.730.1053.0 | |

# PC board connectors, TOP connection
# Spacing: 5.00/5.08 mm

Rated cross section:
2.5 mm²

Rated current:
16 A

Connection range:
0.14 – 4.0 mm² solid/
0.14 – 2.5 mm² fine stranded

250 V/4 kV/3 – Overvoltage category III
*690 V/4 kV/2 – Overvoltage category II
1000 V/4 kV/1 – Overvoltage category I

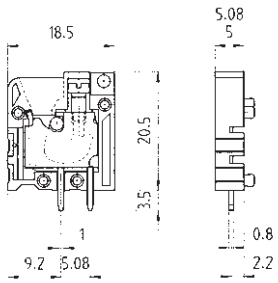


Material
Insulating housing:
PA 66/6 gray, UL 94-V0
Clamping body: zinc-plated steel
Contact clip with solder pin:
tin-plated E copper
Clamping piece: zinc-plated steel
Clamping screw: zinc-plated steel

* max. 600 V for ungrounded networks or expected overvoltage ≤ 4 kV

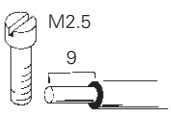


Solder pin 0.8 x 1.0 mm
Bore hole Ø 1.3 mm

| | Type 8185 TOP V<br>wire vertical to PC board | Type 8285 TOP V |
|---|---|---|
| Rated voltages VDE 0110 | | |
| UL ratings field/factory wiring | No. 22/30 – 12 AWG 300 V 20/25 A | No. 22/30 – 12 AWG 300 V 20/25 A |
| CSA ratings | No. 22 – 12 AWG 300 V 20 A | No. 22 – 12 AWG 300 V 20 A |
| Approvals | | |

| | | Type | Part no. | Std. pack | Type | Part no. | Std. pack |
|---|---|---|---|---|---|---|---|
| **Connector assemblies** | | **Spacing: 5.00 mm** | | | **Spacing: 5.08 mm** | | |
| | 2-pole | 8185 TOP V | 25.741.0253.0 | 100 | 8285 TOP V | 25.751.0253.0 | 100 |
| | 3-pole | 8185 TOP V | 25.741.0353.0 | 100 | 8285 TOP V | 25.751.0353.0 | 100 |
| | 4-pole | 8185 TOP V | 25.741.0453.0 | 50 | 8285 TOP V | 25.751.0453.0 | 50 |
| | 5-pole | 8185 TOP V | 25.741.0553.0 | 50 | 8285 TOP V | 25.751.0553.0 | 50 |
| | 6-pole | 8185 TOP V | 25.741.0653.0 | 50 | 8285 TOP V | 25.751.0653.0 | 50 |
| | 7-pole | 8185 TOP V | 25.741.0753.0 | 50 | 8285 TOP V | 25.751.0753.0 | 50 |
| | 8-pole | 8185 TOP V | 25.741.0853.0 | 50 | 8285 TOP V | 25.751.0853.0 | 50 |
| | 9-pole | 8185 TOP V | 25.741.0953.0 | 50 | 8285 TOP V | 25.751.0953.0 | 50 |
| | 10-pole | 8185 TOP V | 25.741.1053.0 | 50 | 8285 TOP V | 25.751.1053.0 | 50 |
| | 11-pole | 8185 TOP V | 25.741.1153.0 | 50 | 8285 TOP V | 25.751.1153.0 | 50 |
| | 12-pole | 8185 TOP V | 25.741.1253.0 | 50 | 8285 TOP V | 25.751.1253.0 | 50 |
| | 13-pole | 8185 TOP V | 25.741.1353.0 | 50 | 8285 TOP V | 25.751.1353.0 | 50 |
| | 14-pole | 8185 TOP V | 25.741.1453.0 | 50 | 8285 TOP V | 25.751.1453.0 | 50 |
| | 15-pole | 8185 TOP V | 25.741.1553.0 | 50 | 8285 TOP V | 25.751.1553.0 | 50 |
| | 16-pole | 8185 TOP V | 25.741.1653.0 | 50 | 8285 TOP V | 25.751.1653.0 | 50 |
| **Single poles, snap together** | | | | | | | |
| Spacings: 5.00 and 5.08 mm | 1pole | 8185 TOP V | 25.741.0053.0 | 100 | 8285 TOP V | 25.751.0053.0 | 100 |
| End plate | | AP 8385 TOP N | 07.300.4753.0 | 50 | AP 8385 TOP N | 07.300.4753.0 | 50 |
| Marking tag carrier, snap-on | 1pole | | 04.242.4253.0 | 100 | | 04.242.4253.0 | 100 |
| Marking tag carrier, snap-on, for group marking, 5.00 mm wide | | BZ 8185 TOP N | 04.242.5853.0 | 50 | | | |
| Marking tag strips | unmarked | 9705 A/5/10 | 04.242.5053.0 | 25 | | | |
| | [1]marked | 9705 A/5/10 B | 04.842.5053.0 | 25 | | | |
| Tear-off marking strip | marked 1, 2, 3 ... 0 | 9704 A/1-0 B | 04.841.2150.0 | 25 | | | |
| Single tag | unmarked | 9705 A | 04.242.0800.0 | | | | |
| | [1]marked | 9705 AB | 04.842.0850.0 | 500 | | | |
| Adhesive marking tag strip | 1 – 12 (100 x) | | 04.007.4089.0 | 1 | | | |
| | 13 – 24 (100 x) | | 04.007.4189.0 | 1 | | | |

[1] Marking upon request

# PC board connector, TOP system
# Spacing: 5.00/5.08 mm

**wiecon** PCB

Rated cross section:
2.5 mm²

Rated current:
16 A

Connection range:
0.14 – 4.0 mm² solid/
0.14 – 2.5 mm² fine stranded

250 V/4 kV/3 – Overvoltage category III
*690 V/4 kV/2 – Overvoltage category II
1000 V/4 kV/1 – Overvoltage category I

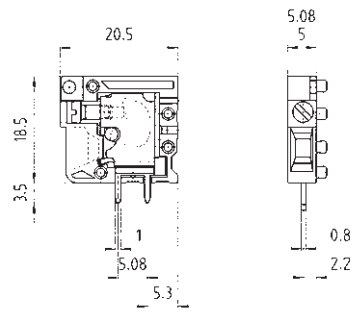


Material
Insulating housing:
PA 66/6 gray, UL 94-V0
Clamping body: zinc-plated steel
Contact clip with solder pin:
tin-plated E copper
Clamping piece: zinc-plated steel
Clamping screw: zinc-plated steel

* max. 600 V for ungrounded networks or expected overvoltage ≤ 4 kV

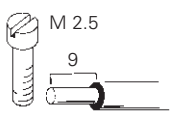


Solder pin 0.8 x 1.0 mm
Bore hole Ø 1.3 mm

| | Type 8185 TOP H<br>wire horizontal to PC board | Type 8285 TOP H |
|---|---|---|
| Rated voltages VDE 0110 | | |
| UL ratings field/factory wiring | No. 22/30 – 12 AWG 300 V 20/25 A | No. 22/30 – 12 AWG 300 V 20/25 A |
| CSA ratings | No. 22 – 12 AWG 300 V 20 A | No. 22 – 12 AWG 300 V 20 A |
| Approvals | | |

| | | Type | Part no. | Std. pack | Type | Part no. | Std. pack |
|---|---|---|---|---|---|---|---|
| **Connector assemblies** | | **Spacing: 5.00 mm** | | | **Spacing: 5.08 mm** | | |
| | 2-pole | 8185 TOP H | 25.741.3253.0 | 100 | 8285 TOP H | 25.751.3253.0 | 100 |
| | 3-pole | 8185 TOP H | 25.741.3353.0 | 100 | 8285 TOP H | 25.751.3353.0 | 100 |
| | 4-pole | 8185 TOP H | 25.741.3453.0 | 50 | 8285 TOP H | 25.751.3453.0 | 50 |
| | 5-pole | 8185 TOP H | 25.741.3553.0 | 50 | 8285 TOP H | 25.751.3553.0 | 50 |
| | 6-pole | 8185 TOP H | 25.741.3653.0 | 50 | 8285 TOP H | 25.751.3653.0 | 50 |
| | 7-pole | 8185 TOP H | 25.741.3753.0 | 50 | 8285 TOP H | 25.751.3753.0 | 50 |
| | 8-pole | 8185 TOP H | 25.741.3853.0 | 50 | 8285 TOP H | 25.751.3853.0 | 50 |
| | 9-pole | 8185 TOP H | 25.741.3953.0 | 50 | 8285 TOP H | 25.751.3953.0 | 50 |
| | 10-pole | 8185 TOP H | 25.741.4053.0 | 50 | 8285 TOP H | 25.751.4053.0 | 50 |
| | 11-pole | 8185 TOP H | 25.741.4153.0 | 50 | 8285 TOP H | 25.751.4153.0 | 50 |
| | 12-pole | 8185 TOP H | 25.741.4253.0 | 50 | 8285 TOP H | 25.751.4253.0 | 50 |
| | 13-pole | 8185 TOP H | 25.741.4353.0 | 50 | 8285 TOP H | 25.751.4353.0 | 50 |
| | 14-pole | 8185 TOP H | 25.741.4453.0 | 50 | 8285 TOP H | 25.751.4453.0 | 50 |
| | 15-pole | 8185 TOP H | 25.741.4553.0 | 50 | 8285 TOP H | 25.751.4553.0 | 50 |
| | 16-pole | 8185 TOP H | 25.741.4653.0 | 50 | 8285 TOP H | 25.751.4653.0 | 50 |
| **Single poles, snap together** | | | | | | | |
| Spacings: 5.00 and 5.08 mm | 1pole | 8185 TOP H | 25.741.0153.0 | 100 | 8285 TOP H | 25.751.0153.0 | 100 |
| End plate | | AP 8385 TOP N | 07.300.4753.0 | 50 | AP 8385 TOP N | 07.300.4753.0 | 50 |
| Marking tag carrier, snap-on | 1pole | | 04.242.4253.0 | 100 | | 04.242.4253.0 | 100 |
| Marking tag carrier, snap-on, for group marking, 5.00 mm wide | | BZ 8185 TOP N | 04.242.5853.0 | 50 | | | |
| Marking tag strip | unmarked | 9705 A/5/10 | 04.242.5053.0 | 25 | | | |
| | [1]marked | 9705 A/5/10 B | 04.842.5053.0 | 25 | | | |
| Tear-off marking strip | marked 1, 2, 3 ... 0 | 9704 A/1-0 B | 04.841.2150.0 | 25 | | | |
| Single tag | unmarked | 9705 A | 04.242.0850.0 | 500 | | | |
| | [1]marked | 9705 AB | 04.842.0850.0 | 500 | | | |
| Adhesive marking tag strip | 1 – 12 (100 x) | | 04.007.4089.0 | 1 | | | |
| | 13 – 24 (100 x) | | 04.007.4189.0 | 1 | | | |

[1] Marking upon request

# PC board connector, TOP connection
# Spacing: 7.50/7.62 mm

Rated cross section:
2.5 mm²

Rated current:
16 A

Connection range:
0.14 – 4.0 mm² solid/
0.14 – 2.5 mm² fine stranded

400 V/6 kV/3 – Overvoltage category III
1000 V/6 kV/2 – Overvoltage category II
1000 V/6 kV/1 – Overvoltage category I

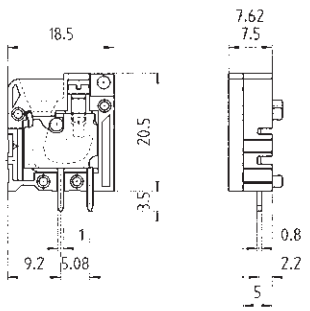


Material
Insulating housing:
PA 66/6 gray, UL 94-V0
Clamping body: zinc-plated steel
Contact clip with solder pin:
tin-plated E copper
Clamping piece: zinc-plated steel
Clamping screw: zinc-plated steel

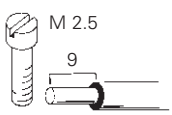


Solder pin 0.8 x 1.0 mm
Bore hole Ø 1.3 mm

| | Type 8385 TOP V<br>wire vertical to PC board | | | Type 8485 TOP V | | |
|---|---|---|---|---|---|---|
| Rated voltages VDE 0110 | | | | | | |
| UL ratings field/factory wiring | No. 22/30 – 12 AWG | 300 V | 20/25 A | No. 22/30 – 12 AWG | 300 V | 20/25 A |
| CSA ratings | No. 22 – 12 AWG | 300 V | 20 A | No. 22 – 12 AWG | 300 V | 20 A |
| Approvals | | | | | | |

| | Type | Part no. | Std. pack | Type | Part no. | Std. pack |
|---|---|---|---|---|---|---|
| **Connector assemblies** | **Spacing: 7.50 mm** | | | **Spacing: 7.62 mm** | | |
| 2-pole | 8385 TOP V | 25.761.0253.0 | 100 | 8485 TOP V | 25.771.0253.0 | 100 |
| 3-pole | 8385 TOP V | 25.761.0353.0 | 100 | 8485 TOP V | 25.771.0353.0 | 100 |
| 4-pole | 8385 TOP V | 25.761.0453.0 | 50 | 8485 TOP V | 25.771.0453.0 | 50 |
| 5-pole | 8385 TOP V | 25.761.0553.0 | 50 | 8485 TOP V | 25.771.0553.0 | 50 |
| 6-pole | 8385 TOP V | 25.761.0653.0 | 50 | 8485 TOP V | 25.771.0653.0 | 50 |
| 7-pole | 8385 TOP V | 25.761.0753.0 | 50 | 8485 TOP V | 25.771.0753.0 | 50 |
| 8-pole | 8385 TOP V | 25.761.0853.0 | 50 | 8485 TOP V | 25.771.0853.0 | 50 |
| Pre-assembled pole configurations upon request | | | | | | |
| **Single poles, snap together** | | | | | | |
| Spacings: 7.50 and 7.62 mm | 8385 TOP V | 25.761.0053.0 | 100 | 8485 TOP V | 25.771.0053.0 | 100 |
| End plate | AP 8385 TOP N | 07.300.4753.0 | 50 | AP 8385 TOP N | 07.300.4753.0 | 50 |
| Marking tag carrier, snap-on | | 04.242.4253.0 | 100 | | 04.242.4253.0 | 100 |
| Marking tag carrier, snap-on, for group marking, 5.00 mm wide | BZ 8185 TOP N | 04.242.5853.0 | 50 | | | |
| Marking tag strips | 9705 A/7,5/10 | 04.242.7553.0 | 25 | | | |
| | 9705 A/7,5/10 B | 04.842.7553.0 | 25 | | | |
| Tear-off marking strips | 9704 A/1-0 B | 04.841.2150.0 | 25 | | | |
| Single tags | 9705 A | 04.242.0850.0 | 500 | | | |
| | 9705 AB | 04.842.0850.0 | 500 | | | |

[1] Marking upon request

# PC board connector, TOP connection
# Spacing: 7.50/7.62 mm

**wiecon** PCB

Rated cross section:
2.5 mm²

Rated current:
16 A

Connection range:
0.14 – 4.0 mm² solid/
0.14 – 2.5 mm² fine stranded

400 V/6 kV/3 – Overvoltage category III
1000 V/6 kV/2 – Overvoltage category II
1000 V/6 kV/1 – Overvoltage category I

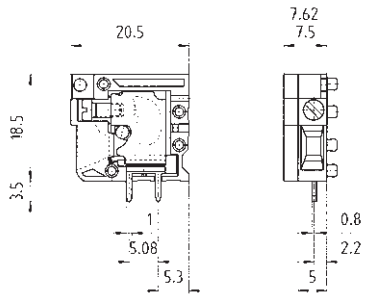


Material
Insulating housing:
PA 66/6 gray, UL 94-V0
Clamping body: zinc-plated steel
Contact clip with solder pin:
tin-plated E copper
Clamping piece: zinc-plated steel
Clamping screw: zinc-plated steel

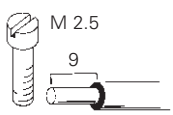


Solder pin 0.8 x 1.0 mm
Bore hole Ø 1.3 mm

| | | Type 8385 TOP H<br>wire horizontal to PC board | Type 8485 TOP H |
|---|---|---|---|
| Rated voltages VDE 0110 | | | |
| UL ratings | field/factory wiring | No. 22/30 – 12 AWG 300 V 20/25 A | No. 22/30 – 12 AWG 300 V 20/25 A |
| CSA ratings | | No. 22 – 12 AWG 300 V 20 A | No. 22 – 12 AWG 300 V 20 A |
| Approvals | | | |

| | | Type | Part no. | Std. pack | Type | Part no. | Std. pack |
|---|---|---|---|---|---|---|---|
| **Connector assemblies** | | **Spacing: 7.50 mm** | | | **Spacing: 7.62 mm** | | |
| | 2pole | 8385 TOP H | 25.761.3253.0 | 100 | 8485 TOP H | 25.771.3253.0 | 100 |
| | 3pole | 8385 TOP H | 25.761.3353.0 | 100 | 8485 TOP H | 25.771.3353.0 | 100 |
| | 4pole | 8385 TOP H | 25.761.3453.0 | 50 | 8485 TOP H | 25.771.3453.0 | 50 |
| | 5pole | 8385 TOP H | 25.761.3553.0 | 50 | 8485 TOP H | 25.771.3553.0 | 50 |
| | 6pole | 8385 TOP H | 25.761.3653.0 | 50 | 8485 TOP H | 25.771.3653.0 | 50 |
| | 7pole | 8385 TOP H | 25.761.3753.0 | 50 | 8485 TOP H | 25.771.3753.0 | 50 |
| | 8pole | 8385 TOP H | 25.761.3853.0 | 50 | 8485 TOP H | 25.771.3853.0 | 50 |
| | Pre-assembled pole configurations upon request | | | | | | |
| **Single poles, snap together** | | | | | | | |
| Spacings: 7.50 und 7.62 mm | 1pole | 8385 TOP H | 25.761.0153.0 | 100 | 8485 TOP H | 25.771.0153.0 | 100 |
| End plate | | AP 8385 TOP N | 07.300.4753.0 | 50 | AP 8385 TOP N | 07.300.4753.0 | 50 |
| Marking tag carrier, snap-on | 1pole | | 04.242.4253.0 | 100 | | 04.242.4253.0 | 100 |
| Marking tag carrier, snap-on, for group marking, 5.00 mm wide | | BZ 8185 TOP N | 04.242.5853.0 | 50 | | | |
| Marking tag strips | unmarked | 9705 A/7,5/10 | 04.242.7553.0 | 25 | | | |
| | [1]marked | 9705 A/7,5/10 B | 04.842.7553.0 | 25 | | | |
| Tear-off marking strip | marked 1, 2, 3 ... 0 | 9704 A/1-0 B | 04.841.2150.0 | 25 | | | |
| Single tags | unmarked | 9705 A | 04.242.0850.0 | 500 | | | |
| | [1]marked | 9705 AB | 04.842.0850.0 | 500 | | | |

[1] Marking upon request

# PC board connector, spring clamp connection
# Spacing: 5.00/5.08 mm

Rated cross section:
2.5 mm²

Rated current:
16 A

Connection range:
0.14 – 4.0 mm² solid/
0.14 – 2.5 mm² fine stranded

250 V/4 kV/3 – Overvoltage category III
*690 V/4 kV/2 – Overvoltage category II
1000 V/4 kV/1 – Overvoltage category I

Material:
Insulating housing: PA 66/6 gray, UL 94-V-0
Clamping body: spring clamp
Contact clips with solder pin:
tin-plated E copper

* max. 600 V for ungrounded networks or expected overvoltage ≤ 4 kV

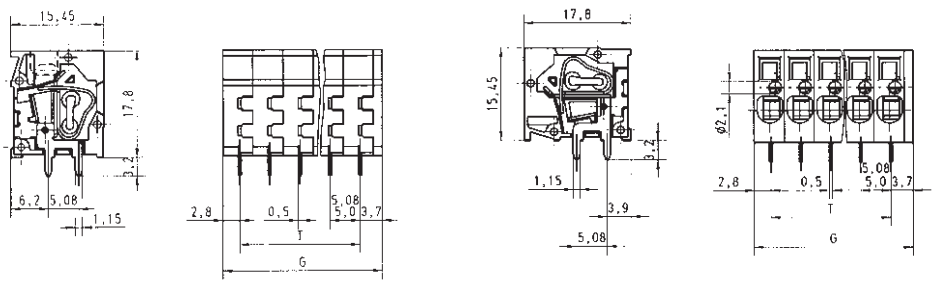

Solder pin 0.5 x 1.15 mm
Bore hole Ø 1.3 mm

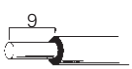

Solder pin 0.5 x 1.15 mm
Bore hole Ø 1.3 mm

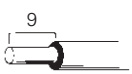


Rated voltages VDE 0110
UL ratings field/factory wiring
CSA ratings – pending
Approvals (UL + CSA pending)

| | **Type 8158 TOP V** wire vertical to PC board | **8258 TOP V** | **Type 8158 TOP H** wire horizontal to PC board | **8258 TOP H** |
|---|---|---|---|---|
| | No. 22/30 – 12 AWG | | No. 22/30 – 12 AWG | |
| | No. 22 – 12 AWG | | No. 22 – 12 AWG | |

| | | Type | Part no. | Std. pack | Type | Part no. | Std. pack |
|---|---|---|---|---|---|---|---|
| **Spacing: 5.00 mm** | | | | | | | |
| | 2pole | 8158 TOP V | 25.780.0253.0 | 100 | 8158 TOP H | 25.790.0253.0 | 100 |
| | 3pole | 8158 TOP V | 25.780.0353.0 | 100 | 8158 TOP H | 25.790.0353.0 | 100 |
| | 4pole | 8158 TOP V | 25.780.0453.0 | 50 | 8158 TOP H | 25.790.0453.0 | 50 |
| | 5pole | 8158 TOP V | 25.780.0553.0 | 50 | 8158 TOP H | 25.790.0553.0 | 50 |
| | 6pole | 8158 TOP V | 25.780.0653.0 | 50 | 8158 TOP H | 25.790.0653.0 | 50 |
| | 7pole | 8158 TOP V | 25.780.0753.0 | 50 | 8158 TOP H | 25.790.0753.0 | 50 |
| | 8pole | 8158 TOP V | 25.780.0853.0 | 50 | 8158 TOP H | 25.790.0853.0 | 50 |
| | 9pole | 8158 TOP V | 25.780.0953.0 | 50 | 8158 TOP H | 25.790.0953.0 | 50 |
| | 10pole | 8158 TOP V | 25.780.1053.0 | 50 | 8158 TOP H | 25.790.1053.0 | 50 |
| | 11pole | 8158 TOP V | 25.780.1153.0 | 50 | 8158 TOP H | 25.790.1153.0 | 50 |
| | 12pole | 8158 TOP V | 25.780.1253.0 | 50 | 8158 TOP H | 25.790.1253.0 | 50 |
| | 13pole | 8158 TOP V | 25.780.1353.0 | 50 | 8158 TOP H | 25.790.1353.0 | 50 |
| | 14pole | 8158 TOP V | 25.780.1453.0 | 50 | 8158 TOP H | 25.790.1453.0 | 50 |
| | 15pole | 8158 TOP V | 25.780.1553.0 | 50 | 8158 TOP H | 25.790.1553.0 | 50 |
| further pole numbers upon request | 16pole | 8158 TOP V | 25.780.1653.0 | 50 | 8158 TOP H | 25.790.1653.0 | 50 |
| **Spacing: 5.08 mm** | | | | | | | |
| | 2pole | 8258 TOP V | 25.781.0253.0 | 100 | 8258 TOP H | 25.791.0253.0 | 100 |
| | 3pole | 8258 TOP V | 25.781.0353.0 | 100 | 8258 TOP H | 25.791.0353.0 | 100 |
| | 4pole | 8258 TOP V | 25.781.0453.0 | 50 | 8258 TOP H | 25.791.0453.0 | 50 |
| | 5pole | 8258 TOP V | 25.781.0553.0 | 50 | 8258 TOP H | 25.791.0553.0 | 50 |
| | 6pole | 8258 TOP V | 25.781.0653.0 | 50 | 8258 TOP H | 25.791.0653.0 | 50 |
| | 7pole | 8258 TOP V | 25.781.0753.0 | 50 | 8258 TOP H | 25.791.0753.0 | 50 |
| | 8pole | 8258 TOP V | 25.781.0853.0 | 50 | 8258 TOP H | 25.791.0853.0 | 50 |
| | 9pole | 8258 TOP V | 25.781.0953.0 | 50 | 8258 TOP H | 25.791.0953.0 | 50 |
| | 10pole | 8258 TOP V | 25.781.1053.0 | 50 | 8258 TOP H | 25.791.1053.0 | 50 |
| | 11pole | 8258 TOP V | 25.781.1153.0 | 50 | 8258 TOP H | 25.791.1153.0 | 50 |
| | 12pole | 8258 TOP V | 25.781.1253.0 | 50 | 8258 TOP H | 25.791.1253.0 | 50 |
| | 13pole | 8258 TOP V | 25.781.1353.0 | 50 | 8258 TOP H | 25.791.1353.0 | 50 |
| | 14pole | 8258 TOP V | 25.781.1453.0 | 50 | 8258 TOP H | 25.791.1453.0 | 50 |
| | 15pole | 8258 TOP V | 25.781.1553.0 | 50 | 8258 TOP H | 25.791.1553.0 | 50 |
| further pole numbers upon request | 16pole | 8258 TOP V | 25.781.1653.0 | 50 | 8258 TOP H | 25.791.1653.0 | 50 |
| **Accessories** | | | | | | | |
| Adhesive marking strips | 1 – 12 (100 x) | | 04.007.4089.0 | 1 | | 04.007.4089.0 | 1 |
| | 13 – 24 (100 x) | | 04.007.4189.0 | 1 | | 04.007.4189.0 | 1 |
| Marking upon request | | | | | | | |
| Test plug | | | Z5.553.2921.0 | 10 | | Z5.553.2921.0 | 10 |

# PC board connectors, spring clamp connection
# Spacing: 7.50/7.62 mm

**wiecon** PCB

Rated cross section:
2.5 mm²

Rated current:
16 A

Connection range:
0.14 – 4.0 mm² solid/
0.14 – 2.5 mm² fine stranded

400 V/6 kV/3 – Overvoltage category III
1000 V/6 kV/2 – Overvoltage category II
1000 V/6 kV/1 – Overvoltage category I

Material:
Insulating housings: PA 66/6 gray, UL 94-V-0
Clamping body: spring clamp
Contact clip with solder pin:
tin-plated E copper

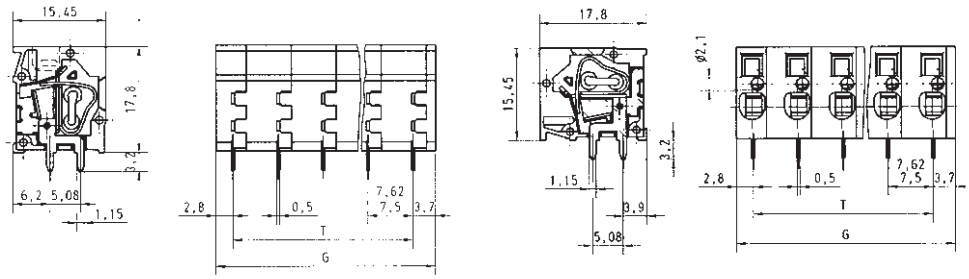

Solder pin 0.5 x 1.15 mm
Bore hole Ø 1.3 mm

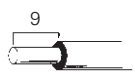

Solder pin 0.5 x 1.15 mm
Bore hole Ø 1.3 mm

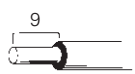


Rated voltages VDE 0110
UL ratings field/factory wiring
CSA ratings
Approvals (UL + CSA pending)

**Type 8358 TOP V**
wire vertical to PC board
No. 22/30 – 12 AWG
No. 22 – 12 AWG

**8458 TOP V**

**Type 8358 TOP H**
wire horizontal to PC board
No. 22/30 – 12 AWG
No. 22 – 12 AWG

**8458 TOP H**

| | | Type | Part no. | Std. pack | Type | Part no. | Std. pack |
|---|---|---|---|---|---|---|---|
| **Spacing: 7.50 mm** | | | | | | | |
| | 2pole | 8358 TOP V | 25.782.0253.0 | 100 | 8358 TOP H | 25.792.0253.0 | 100 |
| | 3pole | 8358 TOP V | 25.782.0353.0 | 100 | 8358 TOP H | 25.792.0353.0 | 100 |
| | 4pole | 8358 TOP V | 25.782.0453.0 | 50 | 8358 TOP H | 25.792.0453.0 | 50 |
| | 5pole | 8358 TOP V | 25.782.0553.0 | 50 | 8358 TOP H | 25.792.0553.0 | 50 |
| | 6pole | 8358 TOP V | 25.782.0653.0 | 50 | 8358 TOP H | 25.792.0653.0 | 50 |
| | 7pole | 8358 TOP V | 25.782.0753.0 | 50 | 8358 TOP H | 25.792.0753.0 | 50 |
| | 8pole | 8358 TOP V | 25.782.0853.0 | 50 | 8358 TOP H | 25.792.0853.0 | 50 |
| | 9pole | 8358 TOP V | 25.782.0953.0 | 50 | 8358 TOP H | 25.792.0953.0 | 50 |
| | 10pole | 8358 TOP V | 25.782.1053.0 | 50 | 8358 TOP H | 25.792.1053.0 | 50 |
| | 11pole | 8358 TOP V | 25.782.1153.0 | 50 | 8358 TOP H | 25.792.1153.0 | 50 |
| | 12pole | 8358 TOP V | 25.782.1253.0 | 50 | 8358 TOP H | 25.792.1253.0 | 50 |
| | 13pole | 8358 TOP V | 25.782.1353.0 | 50 | 8358 TOP H | 25.792.1353.0 | 50 |
| | 14pole | 8358 TOP V | 25.782.1453.0 | 50 | 8358 TOP H | 25.792.1453.0 | 50 |
| | 15pole | 8358 TOP V | 25.782.1553.0 | 50 | 8358 TOP H | 25.792.1553.0 | 50 |
| further number of poles upon request | 16pole | 8358 TOP V | 25.782.1653.0 | 50 | 8358 TOP H | 25.792.1653.0 | 50 |
| **Spacing: 7.62 mm** | | | | | | | |
| | 2pole | 8458 TOP V | 25.783.0253.0 | 100 | 8458 TOP H | 25.793.0253.0 | 100 |
| | 3pole | 8458 TOP V | 25.783.0353.0 | 100 | 8458 TOP H | 25.793.0353.0 | 100 |
| | 4pole | 8458 TOP V | 25.783.0453.0 | 50 | 8458 TOP H | 25.793.0453.0 | 50 |
| | 5pole | 8458 TOP V | 25.783.0553.0 | 50 | 8458 TOP H | 25.793.0553.0 | 50 |
| | 6pole | 8458 TOP V | 25.783.0653.0 | 50 | 8458 TOP H | 25.793.0653.0 | 50 |
| | 7pole | 8458 TOP V | 25.783.0753.0 | 50 | 8458 TOP H | 25.793.0753.0 | 50 |
| | 8pole | 8458 TOP V | 25.783.0853.0 | 50 | 8458 TOP H | 25.793.0853.0 | 50 |
| | 9pole | 8458 TOP V | 25.783.0953.0 | 50 | 8458 TOP H | 25.793.0953.0 | 50 |
| | 10pole | 8458 TOP V | 25.783.1053.0 | 50 | 8458 TOP H | 25.793.1053.0 | 50 |
| | 11pole | 8458 TOP V | 25.783.1153.0 | 50 | 8458 TOP H | 25.793.1153.0 | 50 |
| | 12pole | 8458 TOP V | 25.783.1253.0 | 50 | 8458 TOP H | 25.793.1253.0 | 50 |
| | 13pole | 8458 TOP V | 25.783.1353.0 | 50 | 8458 TOP H | 25.793.1353.0 | 50 |
| | 14pole | 8458 TOP V | 25.783.1453.0 | 50 | 8458 TOP H | 25.793.1453.0 | 50 |
| | 15pole | 8458 TOP V | 25.783.1553.0 | 50 | 8458 TOP H | 25.793.1553.0 | 50 |
| further number of poles upon request | 16pole | 8458 TOP V | 25.783.1653.0 | 50 | 8458 TOP H | 25.793.1653.0 | 50 |
| **Accessories** | | | | | | | |
| | | | | | | | |
| | | | | | | | |
| Marking upon request | | | | | | | |
| Test plug | | | Z5.553.2921.0 | 10 | | Z5.553.2921.0 | 10 |
| | | | | | | | |

# Spacing: 6.35 mm

Rated cross section:
4.0 mm²

Rated current:
36 A
(related to an ambient termperature of 20 °C,
the rated cross section and max. number of poles)

Connection range:
0.5 – 6.0 mm² solid/
0.5 – 4.0 mm² fine stranded

320 V/4 kV/3 – Overvoltage category III
320 V/4 kV/2 – Overvoltage category II
320 V/4 kV/1 – Overvoltage category I

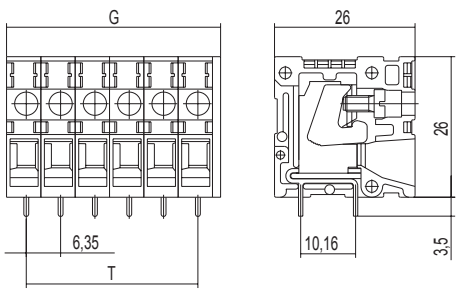


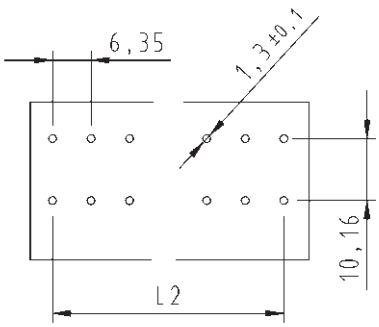


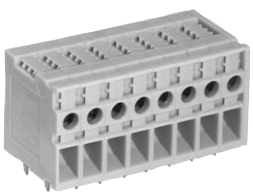

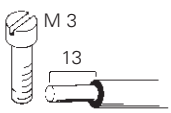


Solder pin Ø 0.8 x 0.9 mm
Bore hole Ø 1.3 mm

## Type 7386 TOP H

| | | | | |
|---|---|---|---|---|
| Rated voltages VDE 0110 | | | | |
| UL ratings | field/factory wiring | No. 22 – 10 AWG | 300 V | 30 A |
| CSA ratings | | No. 22 – 10 AWG | 300 V | 30 A |
| Approvals | | | | |

| Std. pack | G | T | Poles | Part no. |
|---|---|---|---|---|
| **Spacing: 6.35 mm** | | | | unmarked |
| 50 | 14.20 | 6.35 | 2 | 27.714.0253.0 |
| 50 | 20.55 | 12.70 | 3 | 27.714.0353.0 |
| 50 | 26.90 | 19.05 | 4 | 27.714.0453.0 |
| 50 | 33.25 | 25.40 | 5 | 27.714.0553.0 |
| 50 | 39.60 | 31.75 | 6 | 27.714.0653.0 |
| 50 | 45.95 | 38.10 | 7 | 27.714.0753.0 |
| 50 | 52.30 | 44.45 | 8 | 27.714.0853.0 |

# wiecon PCB

Rated cross section:
4.0 mm²

Rated current:
36 A
(related to an ambient temperature of 20°C,
the rated cross section and max. number of poles)

Connection range:
0.5 – 6.0 mm² solid/
0.5 – 4.0 mm² fine stranded

500 V/4 kV/3 – Overvoltage category III
630 V/4 kV/2 – Overvoltage category II
1000 V/4 kV/1 – Overvoltage category I

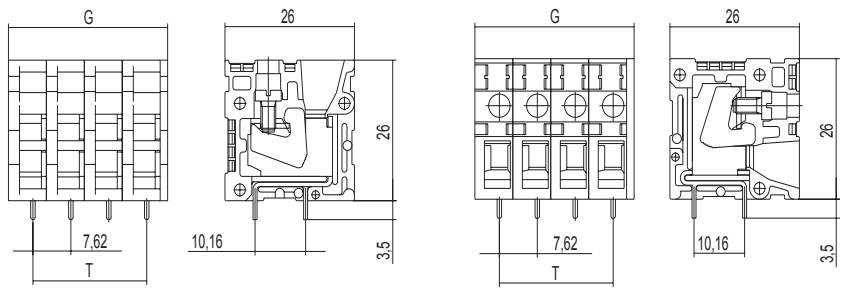

Solder pin 0.8 x 0.9 mm
Bore hole Ø 1.3 mm

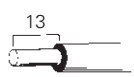

Solder pin 0.8 x 0.9 mm
Bore hole Ø 1.3 mm

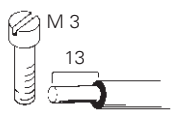


| | | 8486 TOP V | | | 8486 TOP H | | |
|---|---|---|---|---|---|---|---|
| Rated voltages VDE 0110 | | | | | | | |
| UL ratings | field wiring | No. 22 – 10 AWG | 300 V | 30 A | No. 22 – 10 AWG | 300 V | 30 A |
| CSA ratings | | No. 22 – 10 AWG | 300 V | 30 A | No. 22 – 10 AWG | 300 V | 30 A |
| Approvals | | | | | | | |

| Std. pack | G | T | Poles | Part no. | Part no. |
|---|---|---|---|---|---|
| **Spacing: 7.62 mm** | | | | unmarked | unmarked |
| 50 | 16.74 | 7.62 | 2 | 27.703.0253.0 | 27.713.0253.0 |
| 50 | 24.36 | 15.24 | 3 | 27.703.0353.0 | 27.713.0353.0 |
| 50 | 31.98 | 22.86 | 4 | 27.703.0453.0 | 27.713.0453.0 |

# Accessories

wiecon

Test plug and marking tag carrier for
8191 E / 8191 D / 8291 E / 8291 D
can only be used in the upper tier.

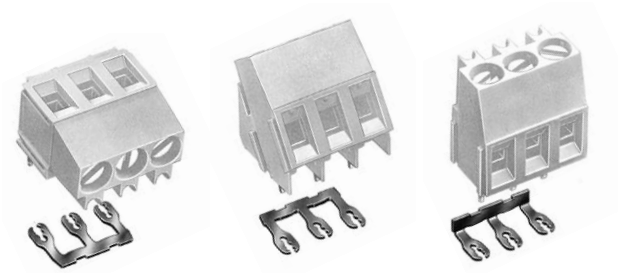

- Jumper bar 2 to 24pole
  for 5.00 and 5.08 mm spacing upon request
- PC board connector with assembled jumper bar
  upon request

## Type 8191 / 8191 E / 8191 D / 8192
## Type 8291 / 8291 E / 8291 D

| Poles | Part no. | Std. pack |
|---|---|---|
| | Test plug | |
| 1 | Z5.533.7121.0 | 100 |
| 2 | Z5.533.7221.0 | 100 |
| | Test plug, 1pole, 10 mm spacing | |
| 1 | Z5.533.7121.0 | 100 |
| | Marking tag carrier for 12 poles, divisible for smaller pole configurations | |
| | 04.242.4653.0 | 50 |
| | Marking strips, unmarked | |
| | 04.242.5053.0 | 25 |
| | 1 – 10, 11 – 20 etc. 991 – 999, marked | |
| | 04.842.5053.0 | 25 |
| | Tear-off marking strip marked 1, 2, 3 ... 0 | |
| | 04.841.2150.0 | 25 |
| | Single tag, unmarked | |
| | 04.242.0850.0 | 500 |
| | marked | |
| | 04.842.0850.0 | 500 |

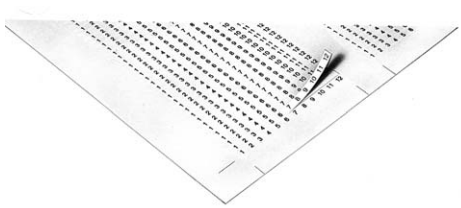

| | | |
|---|---|---|
| | Adhesive marking strips (1 sheet = 100strips) | |
| 1 – 12 | 04.007.4089.0 | 1 |
| 13 – 24 | 04.007.4189.0 | 1 |
| 25 – 36 | 04.007.4289.0 | 1 |
| 37 – 48 | 04.007.4389.0 | 1 |
| 49 – 60 | 04.007.4489.0 | 1 |
| 61 – 72 | 04.007.4589.0 | 1 |
| 73 – 84 | 04.007.4689.0 | 1 |
| 85 – 96 | 04.007.4789.0 | 1 |
| 97 – 108 | 04.007.4889.0 | 1 |

## Type 8391/8491

| Poles | Part no. | Std. pack |
|---|---|---|
| | Test Plug | |
| 1 | Z5.533.7121.0 | 100 |
| 2 | Z5.533.8221.0 | 50 |

## Type 8135 / 8235
## Type 8191 ZW / 8291 ZW / 8192

| Poles | Part no. | Std. pack |
|---|---|---|
| | Test plug | |
| 1 | Z5.533.7121.0 | 100 |
| 2 | Z5.533.7221.0 | 100 |
| | Test plug, 1pole, 10 mm spacing | |
| 1 | Z5.533.7121.0 | 100 |
| | Marking tag carrier for 12 poles, divisible for smaller pole configurations | |
| | 04.242.4653.0 | 50 |
| | Marking strips, unmarked | |
| | 04.242.5053.0 | 25 |
| | 1 – 10, 11 – 20 etc. 991 – 999, marked | |
| | 04.842.5053.0 | 25 |
| | Tear-off marking strip marked 1, 2, 3 ... 0 | |
| | 04.841.2150.0 | 25 |
| | Single tag, unmarked | |
| | 04.242.0850.0 | 500 |
| | marked | |
| | 04.842.0850.0 | 500 |

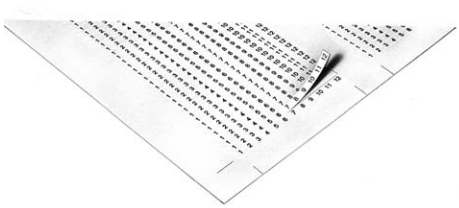

| | | |
|---|---|---|
| | Adhesive marking strips (1 sheet = 100strips) | |
| 1 – 12 | 04.007.4089.0 | 1 |
| 13 – 24 | 04.007.4189.0 | 1 |
| 25 – 36 | 04.007.4289.0 | 1 |
| 37 – 48 | 04.007.4389.0 | 1 |
| 49 – 60 | 04.007.4489.0 | 1 |
| 61 – 72 | 04.007.4589.0 | 1 |
| 73 – 84 | 04.007.4689.0 | 1 |
| 85 – 96 | 04.007.4789.0 | 1 |
| 97 – 108 | 04.007.4889.0 | 1 |

# PC board connectors, rising cage clamp system
# Spacing: 5.00/10.00 mm

**wiecon** PCB

Rated cross section:
2.5 mm²

Rated current:
16 A

Connection range:
0.14 – 4.0 mm² solid/
0.14 – 2.5 mm² fine stranded

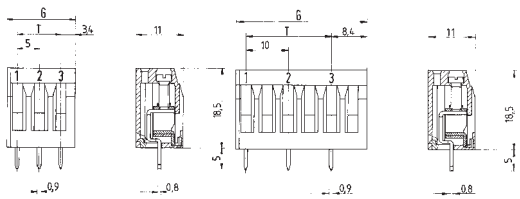

250 V/4 kV/3 – Overvoltage category III
*690 V/4 kV/2 – Overvoltage category II
1000 V/4 kV/1 – Overvoltage category I

* max. 600 V for ungrounded networks or expected overvoltage ≤ 4 kV

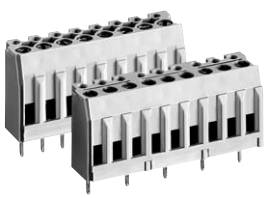

Solder pin 0.8 x 0.9 mm
Bore hole Ø 1.2 mm

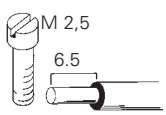


**Type 8190**
wire horizontal to PC board

| | | | |
|---|---|---|---|
| Rated voltages VDE 0110 (Spacing: 5 mm) | | | |
| UL ratings | No. 22 – 12 AWG | 300 V | 15 A |
| CSA ratings | No. 22 – 14 AWG | 300 V | 10 A |
| Approvals | | | |

**Accessories**
**Type 8190**

| Std. pack | G | T | Poles | Part no. unmarked | Part no. marked |
|---|---|---|---|---|---|
| **Spacing: 5.00 mm** | | | | | |
| 100 | 10.86 | 5 | 2 | 25.131.0253.0 | 25.130.0253.0 |
| 100 | 15.86 | 10 | 3 | 25.131.0353.0 | 25.130.0353.0 |
| 50 | 20.86 | 15 | 4 | 25.131.0453.0 | 25.130.0453.0 |
| 50 | 25.86 | 20 | 5 | 25.131.0553.0 | 25.130.0553.0 |
| 50 | 30.86 | 25 | 6 | 25.131.0653.0 | 25.130.0653.0 |
| 50 | 35.86 | 30 | 7 | 25.131.0753.0 | 25.130.0753.0 |
| 50 | 40.86 | 35 | 8 | 25.131.0853.0 | 25.130.0853.0 |
| 50 | 45.86 | 40 | 9 | 25.131.0953.0 | 25.130.0953.0 |
| 50 | 50.86 | 45 | 10 | 25.131.1053.0 | 25.130.1053.0 |
| 50 | 55.86 | 50 | 11 | 25.131.1153.0 | 25.130.1153.0 |
| 50 | 60.86 | 55 | 12 | 25.131.1253.0 | 25.130.1253.0 |
| 50 | 65.86 | 60 | 13 | 25.131.1353.0 | 25.130.1353.0 |
| 50 | 70.86 | 65 | 14 | 25.131.1453.0 | 25.130.1453.0 |
| 50 | 75.86 | 70 | 15 | 25.131.1553.0 | 25.130.1553.0 |
| 50 | 80.86 | 75 | 16 | 25.131.1653.0 | 25.130.1653.0 |
| | 17 to 24pole upon request | | | | |
| **Spacing: 10.00 mm** | | | | unmarked | marked |
| 50 | 20.86 | 10 | 2 | 25.133.0253.0 | 25.132.0253.0 |
| 50 | 30.86 | 20 | 3 | 25.133.0353.0 | 25.132.0353.0 |
| 50 | 40.86 | 30 | 4 | 25.133.0453.0 | 25.132.0453.0 |
| 50 | 50.86 | 40 | 5 | 25.133.0553.0 | 25.132.0553.0 |
| 50 | 60.86 | 50 | 6 | 25.133.0653.0 | 25.132.0653.0 |
| 50 | 70.86 | 60 | 7 | 25.133.0753.0 | 25.132.0753.0 |
| 50 | 80.86 | 70 | 8 | 25.133.0853.0 | 25.132.0853.0 |
| 50 | 90.86 | 80 | 9 | 25.133.0953.0 | 25.132.0953.0 |
| 50 | 100.86 | 90 | 10 | 25.133.1053.0 | 25.132.1053.0 |
| 50 | 110.86 | 100 | 11 | 25.133.1153.0 | 25.132.1153.0 |
| 50 | 120.86 | 110 | 12 | 25.133.1253.0 | 25.132.1253.0 |

Rated voltages:
(spacing: 10.00 mm): VDE 0110

690 V/8 kV/3 – Overvoltage category III
1000 V/8 kV/2 – Overvoltage category II
1000 V/8 kV/1 – Overvoltage category I

Material:
Insulating housing: PA 6/66, UL 94-V-0
Clamping body: zinc-plated steel
Contact clip with solder pin:
tin-plated E copper
Clamping screw: zinc-plated steel

| Poles | Part no. | Std. pack |
|---|---|---|
| | Test plug, nominal current = 2A | |
| 1 | Z5.543.0153.0 | 100 |
| 2 | Z5.543.0253.0 | 100 |
| | Marking tag carrier for 12 poles, divisible for smaller pole configurations | |
| | 04.242.4653.0 | 50 |
| | Marking strips, unmarked | |
| | 04.242.5053.0 | 25 |
| | 1 – 10, 11 – 20 etc. 991 – 999, marked | |
| | 04.842.5053.0 | 25 |
| | Tear-off marking strip marked 1, 2, 3 ... 0 | |
| | 04.841.2150.0 | 25 |
| | Single tag, unmarked | |
| | 04.242.0850.0 | 500 |
| | marked | |
| | 04.842.0850.0 | 500 |

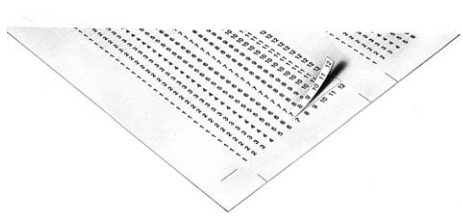

| | | |
|---|---|---|
| | Adhesive marking strips (1 sheet = 100strips) | |
| 1 – 12 | 04.007.4089.0 | 1 |
| 13 – 24 | 04.007.4189.0 | 1 |
| 25 – 36 | 04.007.4289.0 | 1 |
| 37 – 48 | 04.007.4389.0 | 1 |
| 49 – 60 | 04.007.4489.0 | 1 |
| 61 – 72 | 04.007.4589.0 | 1 |
| 73 – 84 | 04.007.4689.0 | 1 |
| 85 – 96 | 04.007.4789.0 | 1 |
| 97 – 108 | 04.007.4889.0 | 1 |

# PC board connectors, rising cage clamp system
# Spacing: 7.50 mm

Rated cross section:
2.5 mm²

Rated current:
16 A

Connection range:
0.14 – 4.0 mm² solid/
0.14 – 2.5 mm² fine stranded

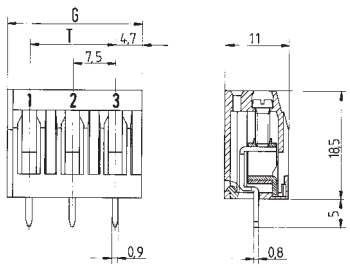


500 V/6 kV/3 – Overvoltage category III
1000 V/6 kV/2 – Overvoltage category II
1000 V/6 kV/1 – Overvoltage category I

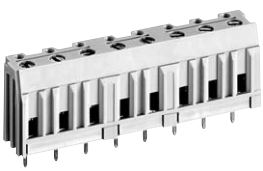

Solder pin 0.8 x 0.9 mm
Bore hole Ø 1.2 mm

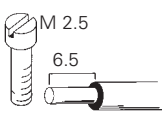

**Type 8390**
wire horizontal to PC board

| | | | |
|---|---|---|---|
| Rated voltages VDE 0110 | | | |
| UL ratings | No. 22 – 12 AWG | 300 V | 15 A |
| CSA ratings | No. 22 – 14 AWG | 300 V | 10 A |
| Approvals | | | |

## Accessories
**Type 8390**

| Poles | Part no. | Std. pack |
|---|---|---|
| | Test plug / nominal current = 2 A | |
| 1 | Z5.543.0153.0 | 100 |
| 2 | Z5.543.0253.0 | 100 |

| Std. pack | G | T | Poles | Part no. unmarked | Part no. marked |
|---|---|---|---|---|---|
| **Spacing: 7.50 mm** | | | | | |
| 100 | 15.86 | 7.5 | 2 | 25.151.0253.0 | 25.150.0253.0 |
| 100 | 23.36 | 15.0 | 3 | 25.151.0353.0 | 25.150.0353.0 |
| 50 | 30.86 | 22.5 | 4 | 25.151.0453.0 | 25.150.0453.0 |
| 50 | 38.36 | 30.0 | 5 | 25.151.0553.0 | 25.150.0553.0 |
| 50 | 45.86 | 37.5 | 6 | 25.151.0653.0 | 25.150.0653.0 |
| 50 | 53.36 | 45.0 | 7 | 25.151.0753.0 | 25.150.0753.0 |
| 50 | 60.86 | 52.5 | 8 | 25.151.0853.0 | 25.150.0853.0 |
| 50 | 68.36 | 60.0 | 9 | 25.151.0953.0 | 25.150.0953.0 |
| 50 | 75.86 | 67.5 | 10 | 25.151.1053.0 | 25.150.1053.0 |
| 50 | 83.36 | 75.0 | 11 | 25.151.1153.0 | 25.150.1153.0 |
| 50 | 90.86 | 82.5 | 12 | 25.151.1253.0 | 25.150.1253.0 |

Material:
Insulating housing: PA 6/66, UL 94-V-0
Clamping body: zinc-plated steel
Contact clip with solder pin:
tin-plated E copper
Clamping screw: zinc-plated steel

# PC board connectors, rising cage clamp system
# Spacing: 5.00/5.08 mm

**wiecon** PCB

Rated cross section:
1.5 mm²

Rated current:
10 A

Connection range:
0.14 – 2.5 mm² solid/
0.14 – 1.5 mm² fine stranded

250 V/4 kV/3 – Overvoltage category III
*690 V/4 kV/2 – Overvoltage category II
1000 V/4 kV/1 – Overvoltage category I

* max. 600 V for ungrounded networks or expected overvoltage ≤ 4 kV

**without** insulating plate

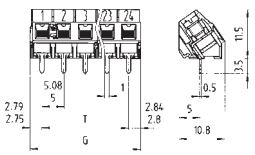

**with** insulating plate, **without** fixing bolts

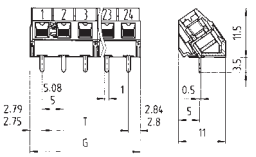

**Bore hole** plan for version **with** fixing bolts

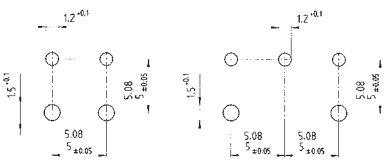

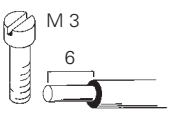


Solder pin 0.5 x 1.0 mm
Bore hole Ø 1.2 mm

**Type 8134/8234**
wire 35° to PC board

| | | | | |
|---|---|---|---|---|
| Rated voltages VDE 0110 | | | | |
| UL ratings | field/factory wiring | No. 30 – 14 AWG | 300 V | 15/16 A |
| CSA ratings | | No. 30 – 14 AWG | 300 V | 15 A |
| Approvals | | | | |

| Std. pack | G | T | Poles | Part no. unmarked without insulating plate | Part no. marked without insulating plate | Part no. unmarked with insulating plate with fixing bolts | Part no. marked with fixing bolts |
|---|---|---|---|---|---|---|---|
| **Spacing: 5.00 mm** | | | | | | | |
| 100 | 10.55 | 5 | 2 | 25.501.0253.0 | 25.500.0253.0 | 25.501.6253.0 | 25.500.6253.0 |
| 100 | 15.55 | 10 | 3 | 25.501.0353.0 | 25.500.0353.0 | 25.501.6353.0 | 25.500.6353.0 |
| 50 | 20.55 | 15 | 4 | 25.501.0453.0 | 25.500.0453.0 | | |
| 50 | 25.55 | 20 | 5 | 25.501.0553.0 | 25.500.0553.0 | | |
| 50 | 30.55 | 25 | 6 | 25.501.0653.0 | 25.500.0653.0 | | |
| 50 | 35.55 | 30 | 7 | 25.501.0753.0 | 25.500.0753.0 | | |
| 50 | 40.55 | 35 | 8 | 25.501.0853.0 | 25.500.0853.0 | | |
| 50 | 45.55 | 40 | 9 | 25.501.0953.0 | 25.500.0953.0 | | |
| 50 | 50.55 | 45 | 10 | 25.501.1053.0 | 25.500.1053.0 | | |
| 50 | 55.55 | 50 | 11 | 25.501.1153.0 | 25.500.1153.0 | | |
| 50 | 60.55 | 55 | 12 | 25.501.1253.0 | 25.500.1253.0 | | |
| 50 | 65.55 | 60 | 13 | 25.501.1353.0 | 25.500.1353.0 | | |
| 50 | 70.55 | 65 | 14 | 25.501.1453.0 | 25.500.1453.0 | | |
| 50 | 75.55 | 70 | 15 | 25.501.1553.0 | 25.500.1553.0 | | |
| 50 | 80.55 | 75 | 16 | 25.501.1653.0 | 25.500.1653.0 | | |
| 17 to 24pole upon request | | | | | | | |
| **Spacing: 5.08 mm** | | | | | | | |
| 100 | 10.71 | 5.08 | 2 | 25.503.0253.0 | 25.502.0253.0 | 25.503.6253.0 | 25.502.6253.0 |
| 100 | 15.79 | 10.16 | 3 | 25.503.0353.0 | 25.502.0353.0 | 25.503.6353.0 | 25.502.6353.0 |
| 50 | 20.87 | 15.24 | 4 | 25.503.0453.0 | 25.502.0453.0 | | |
| 50 | 25.95 | 20.32 | 5 | 25.503.0553.0 | 25.502.0553.0 | | |
| 50 | 31.03 | 25.40 | 6 | 25.503.0653.0 | 25.502.0653.0 | | |
| 50 | 36.11 | 30.48 | 7 | 25.503.0753.0 | 25.502.0753.0 | | |
| 50 | 41.19 | 35.56 | 8 | 25.503.0853.0 | 25.502.0853.0 | | |
| 50 | 46.27 | 40.64 | 9 | 25.503.0953.0 | 25.502.0953.0 | | |
| 50 | 51.35 | 45.72 | 10 | 25.503.1053.0 | 25.502.1053.0 | | |
| 50 | 56.42 | 50.80 | 11 | 25.503.1153.0 | 25.502.1153.0 | | |
| 50 | 61.51 | 55.88 | 12 | 25.503.1253.0 | 25.502.1253.0 | | |
| 50 | 66.59 | 60.96 | 13 | 25.503.1353.0 | 25.502.1353.0 | | |
| 50 | 71.67 | 66.04 | 14 | 25.503.1453.0 | 25.502.1453.0 | | |
| 50 | 76.75 | 71.12 | 15 | 25.503.1553.0 | 25.502.1553.0 | | |
| 50 | 81.83 | 76.20 | 16 | 25.503.1653.0 | 25.502.1653.0 | | |
| 17 to 24pole upon request | | | | | | | |

wiecon

Material:
Insulating housing: PA 66/6 gray, UL 94-V-0
Clamping body: nickel-plated brass
Contact clip with solder pin:
tin-plated bronze
Clamping screw: zinc-plated steel
Brass Nickel-plated
available upon request

| Part no. | Part no. |
|---|---|
| unmarked<br>with insulating plate<br>without fixing bolts | marked<br>with insulating plate<br>with fixing bolts |
| upon request | upon request |
| | |
| | |
| | |
| | |
| | |
| upon request | upon request |
| | |
| | |
| | |
| | |
| | |

# PC board connectors, rising cage clamp system
# Spacing: 5.00/5.08 mm

**wiecon** PCB

Rated cross section:
2.5 mm²

Rated current:
16 A

Connection range:
0.14 – 4.0 mm² solid/
0.14 – 2.5 mm² fine stranded

250 V/4 kV/3 – Overvoltage category III
*690 V/4 kV/2 – Overvoltage category II
1000 V/4 kV/1 – Overvoltage category I

* max. 600 V for ungrounded networks or expected overvoltage ≤ 4 kV

**without** insulating plate

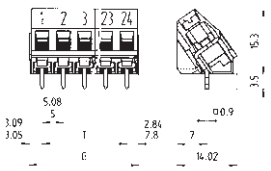

**with** insulating plate, **without** fixing bolts

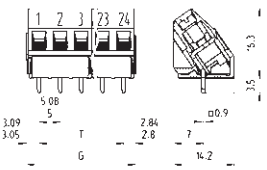

**Bore hole** plan for version **with** fixing bolts

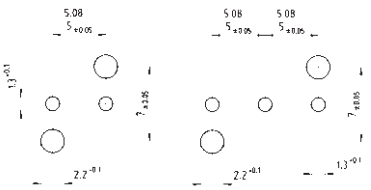

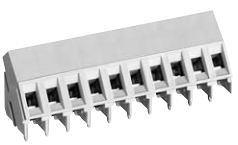

**Type 8135/8235**
wire 35° to PC board

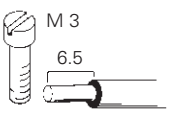


Solder pin 0.9 x 0.9 mm
Bore hole Ø 1.3 mm

| | | | |
|---|---|---|---|
| Rated voltages VDE 0110 | | | |
| UL ratings | field/factory wiring | No. 22 – 12 AWG | 300 V 20/30 A |
| CSA ratings | | No. 22 – 12 AWG | 300 V 25 A |
| Approvals | | | |

| Std. pack | G | T | Poles | Part no. unmarked without insulating plate | Part no. marked without insulating plate | Part no. unmarked with insulating plate with fixing bolts | Part no. marked with insulating plate with fixing bolts |
|---|---|---|---|---|---|---|---|
| **Spacing: 5.00 mm** | | | | | | | |
| 100 | 10.85 | 5 | 2 | 25.521.0253.0 | 25.520.0253.0 | 25.521.6253.0 | 25.520.6253.0 |
| 100 | 15.85 | 10 | 3 | 25.521.0353.0 | 25.520.0353.0 | 25.521.6353.0 | 25.520.6353.0 |
| 50 | 20.85 | 15 | 4 | 25.521.0453.0 | 25.520.0453.0 | | |
| 50 | 25.85 | 20 | 5 | 25.521.0553.0 | 25.520.0553.0 | | |
| 50 | 30.85 | 25 | 6 | 25.521.0653.0 | 25.520.0653.0 | | |
| 50 | 35.85 | 30 | 7 | 25.521.0753.0 | 25.520.0753.0 | | |
| 50 | 40.85 | 35 | 8 | 25.521.0853.0 | 25.520.0853.0 | | |
| 50 | 45.85 | 40 | 9 | 25.521.0953.0 | 25.520.0953.0 | | |
| 50 | 50.85 | 45 | 10 | 25.521.1053.0 | 25.520.1053.0 | | |
| 50 | 55.85 | 50 | 11 | 25.521.1153.0 | 25.520.1153.0 | | |
| 50 | 60.85 | 55 | 12 | 25.521.1253.0 | 25.520.1253.0 | | |
| 50 | 65.85 | 60 | 13 | 25.521.1353.0 | 25.520.1353.0 | | |
| 50 | 70.85 | 65 | 14 | 25.521.1453.0 | 25.520.1453.0 | | |
| 50 | 75.85 | 70 | 15 | 25.521.1553.0 | 25.520.1553.0 | | |
| 50 | 80.85 | 75 | 16 | 25.521.1653.0 | 25.520.1653.0 | | |
| 17 to 24pole upon request | | | | | | | |
| **Spacing: 5.08 mm** | | | | | | | |
| 100 | 11.01 | 5.08 | 2 | 25.523.0253.0 | 25.522.0253.0 | 25.523.6253.0 | 25.522.6253.0 |
| 100 | 16.09 | 10.16 | 3 | 25.523.0353.0 | 25.522.0353.0 | 25.523.6353.0 | 25.522.6353.0 |
| 50 | 21.17 | 15.24 | 4 | 25.523.0453.0 | 25.522.0453.0 | | |
| 50 | 26.25 | 20.32 | 5 | 25.523.0553.0 | 25.522.0553.0 | | |
| 50 | 31.33 | 25.40 | 6 | 25.523.0653.0 | 25.522.0653.0 | | |
| 50 | 36.41 | 30.48 | 7 | 25.523.0753.0 | 25.522.0753.0 | | |
| 50 | 41.49 | 35.56 | 8 | 25.523.0853.0 | 25.522.0853.0 | | |
| 50 | 46.57 | 40.64 | 9 | 25.523.0953.0 | 25.522.0953.0 | | |
| 50 | 51.65 | 45.72 | 10 | 25.523.1053.0 | 25.522.1053.0 | | |
| 50 | 56.73 | 50.80 | 11 | 25.523.1153.0 | 25.522.1153.0 | | |
| 50 | 61.81 | 55.88 | 12 | 25.523.1253.0 | 25.522.1253.0 | | |
| 50 | 66.89 | 60.96 | 13 | 25.523.1353.0 | 25.522.1353.0 | | |
| 50 | 71.97 | 66.04 | 14 | 25.523.1453.0 | 25.522.1453.0 | | |
| 50 | 77.05 | 71.12 | 15 | 25.523.1553.0 | 25.522.1553.0 | | |
| 50 | 82.13 | 76.20 | 16 | 25.523.1653.0 | 25.522.1653.0 | | |
| 17 to 24pole upon request | | | | | | | |

**with** insulating plate, **with** fixing bolts

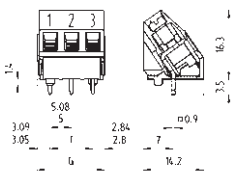


Material:
Insulating housing: PA 66/6 gray, UL 94-V-0
Clamping body: nickel-plated brass
Contact clip with solder pin:
tin-plated E copper
Clamping screw: zinc-plated steel
Brass Nickel-plated
available upon request

| Part no. | Part no. |
|---|---|
| unmarked<br>with insulating plate<br>without fixing bolts | marked<br>with insulating plate<br>without fixing bolts |
| upon request | upon request |
| | |
| | |
| | |
| | |
| | |
| upon request | upon request |
| | |
| | |
| | |
| | |
| | |

# PC board connectors, rising cage clamp system
# Spacing: 5.00/5.08 mm

**wiecon** PCB

Rated cross section:
1.5 mm²

Rated current:
10 A

Connection range:
0.14 – 2.5 mm² solid/
0.14 – 1.5 mm² fine stranded

250 V/4 kV/3 – Overvoltage category III
*690 V/4 kV/2 – Overvoltage category II
1000 V/4 kV/1 – Overvoltage category I

* max. 600 V for ungrounded networks or expected overvoltage ≤ 4 kV

**without** insulating plate

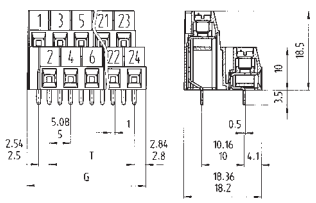

**with** insulating plate, **without** fixing bolts

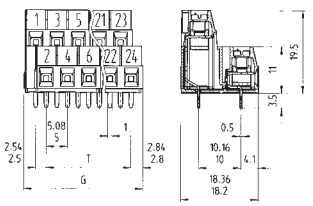

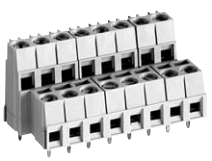

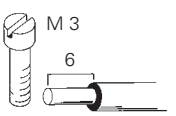


Solder pin 0.5 x 1.0 mm
Bore hole Ø 1.2 mm

## Type 8192 E/8292 E

wire horizontal to PC board

| | | | | |
|---|---|---|---|---|
| Rated voltages VDE 0110 | | | | |
| UL ratings | field/factory wiring | No. 30 – 14 AWG | 300 V | 15/16 A |
| CSA ratings | | No. 30 – 14 AWG | 300 V | 15 A |
| Approvals | | | | |

| Std. pack | G | T | Poles | Part no. | Part no. | Part no. | Part no. |
|---|---|---|---|---|---|---|---|
| **Spacing: 5.00 mm** | | | | unmarked without insulating plate | marked without insulating plate | unmarked with insulating plate with fixing bolts | marked with insulating plate with fixing bolts |
| 50 | 13.05 | 5 | 4 | 25.198.5253.0 | 25.198.0253.0 | 25.198.9253.0 | 25.198.4253.0 |
| 50 | 18.05 | 10 | 6 | 25.198.5353.0 | 25.198.0353.0 | 25.198.9353.0 | 25.198.4353.0 |
| 50 | 23.05 | 15 | 8 | 25.198.5453.0 | 25.198.0453.0 | | |
| 50 | 28.05 | 20 | 10 | 25.198.5553.0 | 25.198.0553.0 | | |
| 50 | 33.05 | 25 | 12 | 25.198.5653.0 | 25.198.0653.0 | | |
| 50 | 38.05 | 30 | 14 | 25.198.5753.0 | 25.198.0753.0 | | |
| 50 | 43.05 | 35 | 16 | 25.198.5853.0 | 25.198.0853.0 | | |
| 50 | 48.05 | 40 | 18 | 25.198.5953.0 | 25.198.0953.0 | | |
| 50 | 53.05 | 45 | 20 | 25.198.6053.0 | 25.198.1053.0 | | |
| 50 | 58.05 | 50 | 22 | 25.198.6153.0 | 25.198.1153.0 | | |
| 50 | 63.05 | 55 | 24 | 25.198.6253.0 | 25.198.1253.0 | | |
| **Spacing: 5.08 mm** | | | | | | | |
| 50 | 13.25 | 5.08 | 4 | 25.199.5253.0 | 25.199.0253.0 | 25.199.9253.0 | 25.199.4253.0 |
| 50 | 18.33 | 10.16 | 6 | 25.199.5353.0 | 25.199.0353.0 | 25.199.9353.0 | 25.199.4353.0 |
| 50 | 23.41 | 15.24 | 8 | 25.199.5453.0 | 25.199.0453.0 | | |
| 50 | 28.49 | 20.32 | 10 | 25.199.5553.0 | 25.199.0553.0 | | |
| 50 | 33.57 | 25.40 | 12 | 25.199.5653.0 | 25.199.0653.0 | | |
| 50 | 38.65 | 30.48 | 14 | 25.199.5753.0 | 25.199.0753.0 | | |
| 50 | 43.73 | 35.56 | 16 | 25.199.5853.0 | 25.199.0853.0 | | |
| 50 | 48.81 | 40.64 | 18 | 25.199.5953.0 | 25.199.0953.0 | | |
| 50 | 53.89 | 45.72 | 20 | 25.199.6053.0 | 25.199.1053.0 | | |
| 50 | 58.97 | 50.80 | 22 | 25.199.6153.0 | 25.199.1153.0 | | |
| 50 | 64.05 | 55.88 | 24 | 25.199.6253.0 | 25.199.1253.0 | | |

# Tear-off marking strip with 10 marking tags

| Material: Polyamide 6/66 white/marking black | Marking per tree | Type | Part no. | Std. pack |
|---|---|---|---|---|
| unmarked | | 9704 A | 04.241.1150.0 | 25 |
| marked with the same number | 1 1 1 1 1 1 1 1 1 1 | 9704 A/1 B | 04.841.1150.0 | 25 |
| | 2 2 2 2 2 2 2 2 2 2 | 9704 A/2 B | 04.841.1250.0 | 25 |
| | 3 3 3 3 3 3 3 3 3 3 | 9704 A/3 B | 04.841.1350.0 | 25 |
| | 4 4 4 4 4 4 4 4 4 4 | 9704 A/4 B | 04.841.1450.0 | 25 |
| | 5 5 5 5 5 5 5 5 5 5 | 9704 A/5 B | 04.841.1550.0 | 25 |
| | 6 6 6 6 6 6 6 6 6 6 | 9704 A/6 B | 04.841.1650.0 | 25 |
| | 7 7 7 7 7 7 7 7 7 7 | 9704 A/7 B | 04.841.1750.0 | 25 |
| | 8 8 8 8 8 8 8 8 8 8 | 9704 A/8 B | 04.841.1850.0 | 25 |
| | 9 9 9 9 9 9 9 9 9 9 | 9704 A/9 B | 04.841.1950.0 | 25 |
| | 0 0 0 0 0 0 0 0 0 0 | 9704 A/0 B | 04.841.2050.0 | 25 |
| marked with consecutive numbers | 1 2 3 4 5 6 7 8 9 0 | 9704 A/1-0 B | 04.841.2150.0 | 25 |
| marked with the same capital letters | A A A A A A A A A A | 9704 A/AG B | 04.841.2250.0 | 25 |
| | B B B B B B B B B B | 9704 A/BG B | 04.841.2350.0 | 25 |
| | C C C C C C C C C C | 9704 A/CG B | 04.841.2450.0 | 25 |
| | D D D D D D D D D D | 9704 A/DG B | 04.841.2550.0 | 25 |
| | E E E E E E E E E E | 9704 A/EG B | 04.841.2650.0 | 25 |
| | F F F F F F F F F F | 9704 A/FG B | 04.841.2750.0 | 25 |
| | G G G G G G G G G G | 9704 A/GG B | 04.841.2850.0 | 25 |
| | H H H H H H H H H H | 9704 A/HG B | 04.841.2950.0 | 25 |
| | I I I I I I I I I I | 9704 A/IG B | 04.841.3050.0 | 25 |
| | J J J J J J J J J J | 9704 A/JG B | 04.841.3150.0 | 25 |
| | K K K K K K K K K K | 9704 A/KG B | 04.841.3250.0 | 25 |
| | L L L L L L L L L L | 9704 A/LG B | 04.841.3350.0 | 25 |
| | M M M M M M M M M M | 9704 A/MG B | 04.841.3450.0 | 25 |
| | N N N N N N N N N N | 9704 A/NG B | 04.841.3550.0 | 25 |
| | O O O O O O O O O O | 9704 A/OG B | 04.841.3650.0 | 25 |
| | P P P P P P P P P P | 9704 A/PG B | 04.841.3750.0 | 25 |
| | Q Q Q Q Q Q Q Q Q Q | 9704 A/QG B | 04.841.3850.0 | 25 |
| | R R R R R R R R R R | 9704 A/RG B | 04.841.3950.0 | 25 |
| | S S S S S S S S S S | 9704 A/SG B | 04.841.4050.0 | 25 |
| | T T T T T T T T T T | 9704 A/TG B | 04.841.4150.0 | 25 |
| | U U U U U U U U U U | 9704 A/UG B | 04.841.4250.0 | 25 |
| | V V V V V V V V V V | 9704 A/VG B | 04.841.4350.0 | 25 |
| | W W W W W W W W W W | 9704 A/WG B | 04.841.4450.0 | 25 |
| | X X X X X X X X X X | 9704 A/XG B | 04.841.4550.0 | 25 |
| | Y Y Y Y Y Y Y Y Y Y | 9704 A/YG B | 04.841.4650.0 | 25 |
| | Z Z Z Z Z Z Z Z Z Z | 9704 A/ZG B | 04.841.4750.0 | 25 |
| marked with the same lower case letters | a a a a a a a a a a | 9704 A/AK B | 04.841.4850.0 | 25 |
| | b b b b b b b b b b | 9704 A/BK B | 04.841.4950.0 | 25 |
| | c c c c c c c c c c | 9704 A/CK B | 04.841.5050.0 | 25 |
| | d d d d d d d d d d | 9704 A/DK B | 04.841.5150.0 | 25 |
| | e e e e e e e e e e | 9704 A/EK B | 04.841.5250.0 | 25 |
| | f f f f f f f f f f | 9704 A/FK B | 04.841.5350.0 | 25 |
| | g g g g g g g g g g | 9704 A/GK B | 04.841.5450.0 | 25 |
| | h h h h h h h h h h | 9704 A/HK B | 04.841.5550.0 | 25 |
| | i i i i i i i i i i | 9704 A/IK B | 04.841.5650.0 | 25 |
| | j j j j j j j j j j | 9704 A/JK B | 04.841.5750.0 | 25 |
| | k k k k k k k k k k | 9704 A/KK B | 04.841.5850.0 | 25 |
| | l l l l l l l l l l | 9704 A/LK B | 04.841.5950.0 | 25 |
| | m m m m m m m m m m | 9704 A/MK B | 04.841.6050.0 | 25 |
| | n n n n n n n n n n | 9704 A/NK B | 04.841.6150.0 | 25 |
| | o o o o o o o o o o | 9704 A/OK B | 04.841.6250.0 | 25 |
| | p p p p p p p p p p | 9704 A/PK B | 04.841.6350.0 | 25 |
| | q q q q q q q q q q | 9704 A/QK B | 04.841.6450.0 | 25 |
| | r r r r r r r r r r | 9704 A/RK B | 04.841.6550.0 | 25 |
| | s s s s s s s s s s | 9704 A/SK B | 04.841.6650.0 | 25 |
| | t t t t t t t t t t | 9704 A/TK B | 04.841.6750.0 | 25 |
| | u u u u u u u u u u | 9704 A/UK B | 04.841.6850.0 | 25 |
| | v v v v v v v v v v | 9704 A/VK B | 04.841.6950.0 | 25 |
| | w w w w w w w w w w | 9704 A/WK B | 04.841.7050.0 | 25 |
| | x x x x x x x x x x | 9704 A/XK B | 04.841.7150.0 | 25 |
| | y y y y y y y y y y | 9704 A/YK B | 04.841.7250.0 | 25 |
| | z z z z z z z z z z | 9704 A/ZK B | 04.841.7350.0 | 25 |
| marked with the same symbols | + + + + + + + + + + | 9704 A/+ B | 04.841.7450.0 | 25 |
| | – – – – – – – – – – | 9704 A/– B | 04.841.7550.0 | 25 |
| | / / / / / / / / / / | 9704 A// B | 04.841.7650.0 | 25 |
| | . . . . . . . . . . | 9704 A/. B | 04.841.7750.0 | 25 |
| 1 set of the same numbers = 10 x 25 strips = 2500 numbers | 1 1 1 ... 0 0 0 | 111 to 000 | 04.841.9050.0 | 1 |
| 1 set of cap. letters = 26 x 25 strips = 6500 letters | A A A ... Z Z Z | A to Z GB | 04.841.9150.0 | 1 |
| 1 set of lower case letters = 26 x 25 strips = 6500 letters | a a a ... z z z | a to z KB | 04.841.9250.0 | 1 |

# PC board connectors, rising cage clamp system
# Spacing: 5.00/5.08 mm

**wiecon** PCB

Rated cross section:
2.5 mm²

Rated current:
16 A

Connection range:
0.14 – 4.0 mm² solid/
0.14 – 2.5 mm² fine stranded

250 V/4 kV/3 – Overvoltage category III
*690 V/4 kV/2 – Overvoltage category II
1000 V/4 kV/1 – Overvoltage category I

* max. 600 V for ungrounded networks or expected overvoltage ≤ 4 kV

**without** insulating plate

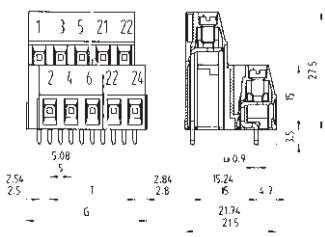

**with** insulating plate, **without** fixing bolts

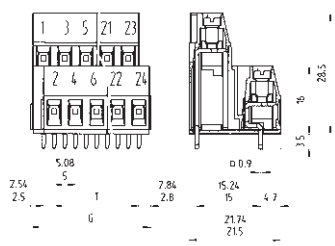

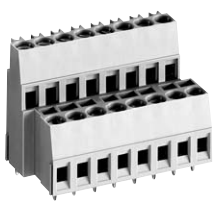

Solder pin 0.9 x 0.9 mm
Bore hole Ø 1.3 mm

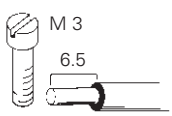


## Type 8191 E/8291 E

wire horizontal to PC board

| | | | | |
|---|---|---|---|---|
| Rated voltages VDE 0110 | | | | |
| UL ratings | field/factory wiring | No. 22 – 12 AWG | 300 V | 20/30 A |
| CSA ratings | | No. 22 – 12 AWG | 300 V | 25 A |
| Approvals | | | | |

| Std. pack | G | T | Poles | Part no. | Part no. | Part no. | Part no. |
|---|---|---|---|---|---|---|---|
| **Spacing: 5.00 mm** | | | | unmarked without insulating plate | marked without insulating plate | unmarked with insulating plate with fixing bolts | marked with insulating plate with fixing bolts |
| 50 | 13.05 | 5 | 4 | 25.178.5253.0 | 25.178.0253.0 | 25.178.9253.0 | 25.178.4253.0 |
| 50 | 18.05 | 10 | 6 | 25.178.5353.0 | 25.178.0353.0 | 25.178.9353.0 | 25.178.4353.0 |
| 50 | 23.05 | 15 | 8 | 25.178.5453.0 | 25.178.0453.0 | | |
| 50 | 28.05 | 20 | 10 | 25.178.5553.0 | 25.178.0553.0 | | |
| 50 | 33.05 | 25 | 12 | 25.178.5653.0 | 25.178.0653.0 | | |
| 50 | 38.05 | 30 | 14 | 25.178.5753.0 | 25.178.0753.0 | | |
| 50 | 43.05 | 35 | 16 | 25.178.5853.0 | 25.178.0853.0 | | |
| 50 | 48.05 | 40 | 18 | 25.178.5953.0 | 25.178.0953.0 | | |
| 50 | 53.05 | 45 | 20 | 25.178.6053.0 | 25.178.1053.0 | | |
| 50 | 58.05 | 50 | 22 | 25.178.6153.0 | 25.178.1153.0 | | |
| 50 | 63.05 | 55 | 24 | 25.178.6253.0 | 25.178.1253.0 | | |
| **Spacing: 5.08 mm** | | | | | | | |
| 50 | 13.25 | 5.08 | 4 | 25.179.5253.0 | 25.179.0253.0 | 25.179.9253.0 | 25.179.4253.0 |
| 50 | 18.33 | 10.16 | 6 | 25.179.5353.0 | 25.179.0353.0 | 25.179.9353.0 | 25.179.4353.0 |
| 50 | 23.41 | 15.24 | 8 | 25.179.5453.0 | 25.179.0453.0 | | |
| 50 | 28.49 | 20.32 | 10 | 25.179.5553.0 | 25.179.0553.0 | | |
| 50 | 33.57 | 25.40 | 12 | 25.179.5653.0 | 25.179.0653.0 | | |
| 50 | 38.65 | 30.48 | 14 | 25.179.5753.0 | 25.179.0753.0 | | |
| 50 | 43.73 | 35.56 | 16 | 25.179.5853.0 | 25.179.0853.0 | | |
| 50 | 48.81 | 40.64 | 18 | 25.179.5953.0 | 25.179.0953.0 | | |
| 50 | 53.89 | 45.72 | 20 | 25.179.6053.0 | 25.179.1053.0 | | |
| 50 | 58.97 | 50.80 | 22 | 25.179.6153.0 | 25.179.1153.0 | | |
| 50 | 64.05 | 55.88 | 24 | 25.179.6253.0 | 25.179.1253.0 | | |

**with** insulating plate, **with** fixing bolts

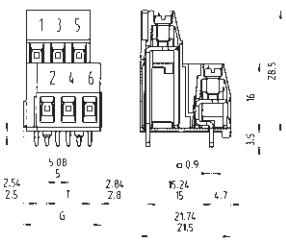


**Bore hole** plan for version **with** fixing bolts

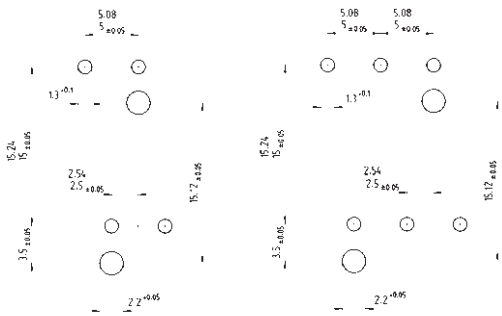


Material:
Insulating housing: PA 66/6 gray, UL 94-V-2
Clamping body: nickel-plated brass
Contact clip with solder pin:
tin-plated E copper
Clamping screw: zinc-plated steel

| Part no. | Part no. |
|---|---|
| unmarked<br>with insulating plate<br>without fixing bolts | marked<br>with insulating plate<br>without fixing bolts |
| upon request | upon request |
| | |
| | |
| | |
| | |
| | |
| upon request | upon request |
| | |
| | |
| | |
| | |
| | |

# PC board connector, rising cage clamp system
# Spacing: 5.00 mm

**wiecon** PCB

Rated cross section:
2.5 mm²

Rated current:
16 A

Connection range:
0.14 – 4.0 mm² solid/
0.14 – 2.5 mm² fine stranded

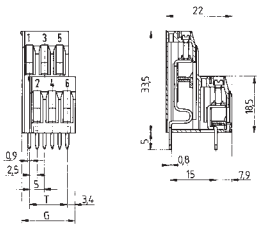

250 V/4 kV/3 – Overvoltage category III
*690 V/4 kV/2 – Overvoltage category II
1000 V/4 kV/1 – Overvoltage category I

* max. 600 V for ungrounded networks or expected overvoltage ≤ 4 kV

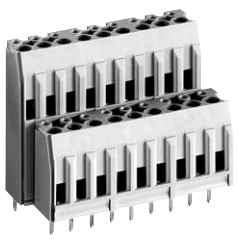

**Type 8190 E**
wire horizontal to PC board

Solder pin 0.8 x 0.9 mm
Bore hole Ø 1.2 mm

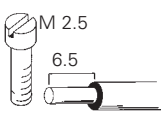

| | | |
|---|---|---|
| Rated voltages VDE 0110 | | |
| UL ratings | No. 22 – 12 AWG | 300 V 15 A |
| CSA ratings | No. 22 – 14 AWG | 300 V 10 A |
| Approvals | | |

| Std. pack | G | T | Poles | Part no. unmarked | Part no. marked |
|---|---|---|---|---|---|
| **Spacing: 5.00 mm** | | | | | |
| 50 | 13.36 | 5 | 4 | 25.131.3253.0 | 25.130.3253.0 |
| 50 | 18.36 | 10 | 6 | 25.131.3353.0 | 25.130.3353.0 |
| 50 | 23.36 | 15 | 8 | 25.131.3453.0 | 25.130.3453.0 |
| 50 | 28.36 | 20 | 10 | 25.131.3553.0 | 25.130.3553.0 |
| 50 | 33.36 | 25 | 12 | 25.131.3653.0 | 25.130.3653.0 |
| 50 | 38.36 | 30 | 14 | 25.131.3753.0 | 25.130.3753.0 |
| 50 | 43.36 | 35 | 16 | 25.131.3853.0 | 25.130.3853.0 |
| 50 | 48.36 | 40 | 18 | 25.131.3953.0 | 25.130.3953.0 |
| 50 | 53.36 | 45 | 20 | 25.131.4053.0 | 25.130.4053.0 |
| 50 | 58.36 | 50 | 22 | 25.131.4153.0 | 25.130.4153.0 |
| 50 | 63.36 | 55 | 24 | 25.131.4253.0 | 25.130.4253.0 |

Material:
Insulating housing: PA 6/66, UL 94-V-0
Clamping body: zinc-plated steel
Contact clip with solder pin:
tin-plated E copper
Clamping screw: zinc-plated steel

## Accessories
### Type 8190 E

| Poles | Part no. | Std. pack |
|---|---|---|
| | Test plug, nominal current = 2A | |
| 1 | Z5.543.0153.0 | 100 |
| 2 | Z5.543.0253.0 | 100 |
| | Marking tag carrier for 12 poles, divisible for smaller pole configurations | |
| | 04.242.4653.0 | 50 |
| | Marking strips, unmarked | |
| | 04.242.5053.0 | 25 |
| | 1 – 10, 11 – 20 etc. 991 – 999, marked | |
| | 04.842.5053.0 | 25 |
| | Tear-off marking strip marked 1, 2, 3 ... 0 | |
| | 04.841.2150.0 | 25 |
| | Single tag, unmarked | |
| | 04.242.0850.0 | 500 |
| | marked | |
| | 04.842.0850.0 | 500 |

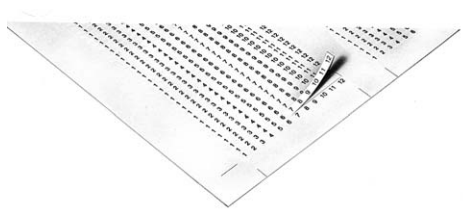

| | | |
|---|---|---|
| | Adhesive marking strips (1 sheet = 100strips) | |
| 1 – 12 | 04.007.4089.0 | 1 |
| 13 – 24 | 04.007.4189.0 | 1 |
| 25 – 36 | 04.007.4289.0 | 1 |
| 37 – 48 | 04.007.4389.0 | 1 |
| 49 – 60 | 04.007.4489.0 | 1 |
| 61 – 72 | 04.007.4589.0 | 1 |
| 73 – 84 | 04.007.4689.0 | 1 |
| 85 – 96 | 04.007.4789.0 | 1 |
| 97 – 108 | 04.007.4889.0 | 1 |

wiecon

# PC board connectors, rising cage clamp system
# Spacing: 5.00/5.08 mm

**wiecon** PCB

Rated cross section:
2.5 mm²

Rated current:
16 A

Connection range:
0.14 – 4.0 mm² solid/
0.14 – 2.5 mm² fine stranded

250 V/4 kV/3 – Overvoltage category III
*690 V/4 kV/2 – Overvoltage category II
1000 V/4 kV/1 – Overvoltage category I

* max. 600 V for ungrounded networks or expected overvoltage ≤ 4 kV

**without** insulating plate

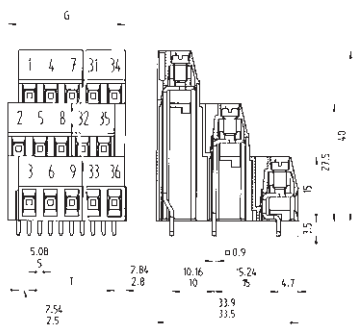

Solder pin 0.9 x 0.9 mm
Bore hole Ø 1.3 mm

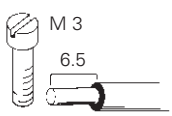


**Type 8191 D/8291 D**
wire horizontal to PC board

| | | | | |
|---|---|---|---|---|
| Rated voltages VDE 0110 | | | | |
| UL ratings | field/factory wiring | No. 22 – 12 AWG | 300 V | 20/30 A |
| CSA ratings | | No. 22 – 12 AWG | 300 V | 25 A |
| Approvals | | | | |

| Std. pack | G | T | Poles | Part no. | Part no. | Part no. | Part no. |
|---|---|---|---|---|---|---|---|
| **Spacing: 5.00 mm** | | | | unmarked without insulating plate | marked without insulating plate | unmarked with insulating plate with fixing bolts | marked with insulating plate with fixing bolts |
| 50 | 12.8 | 5 | 6 | 25.180.5253.0 | 25.180.0253.0 | 25.180.9253.0 | 25.180.4253.0 |
| 50 | 17.8 | 10 | 9 | 25.180.5353.0 | 25.180.0353.0 | 25.180.9353.0 | 25.180.4353.0 |
| 50 | 22.8 | 15 | 12 | 25.180.5453.0 | 25.180.0453.0 | | |
| 50 | 27.8 | 20 | 15 | 25.180.5553.0 | 25.180.0553.0 | | |
| 50 | 32.8 | 25 | 18 | 25.180.5653.0 | 25.180.0653.0 | | |
| 50 | 37.8 | 30 | 21 | 25.180.5753.0 | 25.180.0753.0 | | |
| 50 | 42.8 | 35 | 24 | 25.180.5853.0 | 25.180.0853.0 | | |
| 50 | 47.8 | 40 | 27 | 25.180.5953.0 | 25.180.0953.0 | | |
| 20 | 52.8 | 45 | 30 | 25.180.6053.0 | 25.180.1053.0 | | |
| 20 | 57.8 | 50 | 33 | 25.180.6153.0 | 25.180.1153.0 | | |
| 20 | 62.8 | 55 | 36 | 25.180.6253.0 | 25.180.1253.0 | | |
| **Spacing: 5.08 mm** | | | | | | | |
| 50 | 12.70 | 5.08 | 6 | 25.181.5253.0 | 25.181.0253.0 | 25.181.9253.0 | 25.181.4253.0 |
| 50 | 17.78 | 10.16 | 9 | 25.181.5353.0 | 25.181.0353.0 | 25.181.9353.0 | 25.181.4353.0 |
| 50 | 22.86 | 15.24 | 12 | 25.181.5453.0 | 25.181.0453.0 | | |
| 50 | 27.94 | 20.32 | 15 | 25.181.5553.0 | 25.181.0553.0 | | |
| 50 | 33.02 | 25.40 | 18 | 25.181.5653.0 | 25.181.0653.0 | | |
| 50 | 38.10 | 30.48 | 21 | 25.181.5753.0 | 25.181.0753.0 | | |
| 50 | 43.18 | 35.56 | 24 | 25.181.5853.0 | 25.181.0853.0 | | |
| 50 | 48.26 | 40.64 | 27 | 25.181.5953.0 | 25.181.0953.0 | | |
| 20 | 53.34 | 45.72 | 30 | 25.181.6053.0 | 25.181.1053.0 | | |
| 20 | 58.42 | 50.80 | 33 | 25.181.6153.0 | 25.181.1153.0 | | |
| 20 | 63.50 | 55.88 | 36 | 25.181.6253.0 | 25.181.1253.0 | | |

**with** insulating plate, **without** fixing bolts

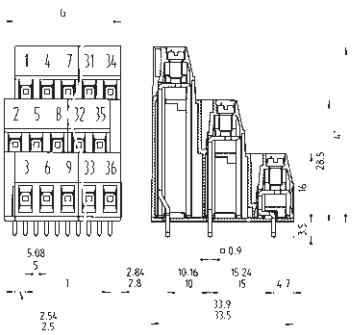

**with** insulating plate, **with** fixing bolts

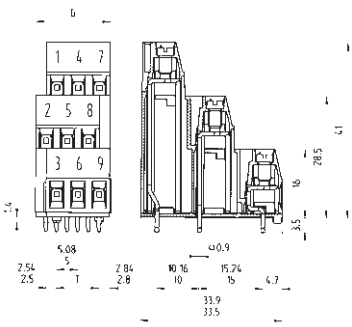

**Bore hole** plan for version **with** fixing bolts

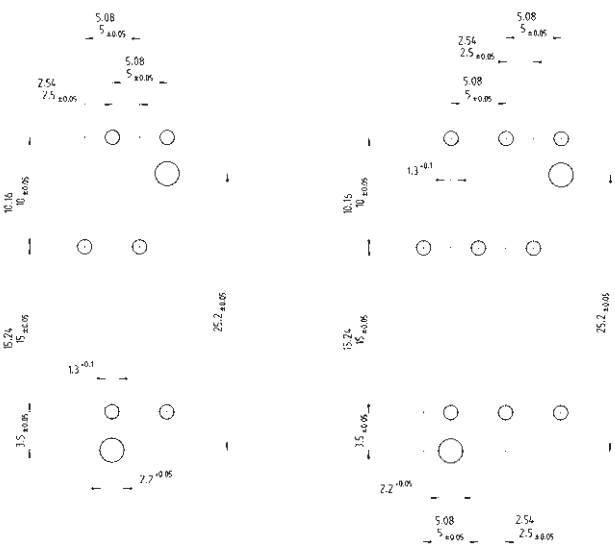

Material:
Insulating housing: PA 66/6 gray, UL 94-V-0
Clamping body: nickel-plated brass
Contact clip with solder pin:
tin-plated E copper
Clamping screw: zinc-plated steel

| Part no. | Part no. |
|---|---|
| unmarked<br>with insulating plate<br>without fixing bolts | marked<br>with insulating plate<br>without fixing bolts |
| upon request | upon request |
| | |
| | |
| | |
| | |
| | |
| upon request | upon request |
| | |
| | |
| | |
| | |
| | |

# PC board connectors, rising cage clamp system
# Spacing: 5.00 mm

**wiecon** PCB

Rated cross section:
1.5 mm², PE 2.5 mm²

Rated current:
10 A

Connection range:
0.5 – 2.5 mm² solid 0.5 – 4.0 mm² (PE)
0.5 – 1.5 mm² fine stranded 0.5 – 2.5 mm² (PE)

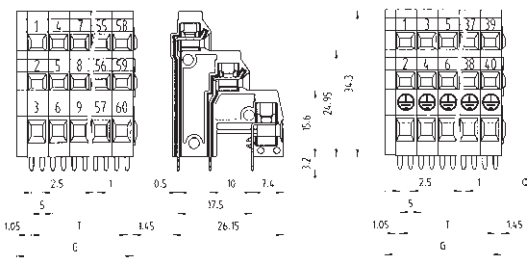

250 V/4 kV/3 – Overvoltage category III
*690 V/4 kV/2 – Overvoltage category II
1000 V/4 kV/1 – Overvoltage category I

* max. 600 V for ungrounded networks or expected overvoltage ≤ 4 kV

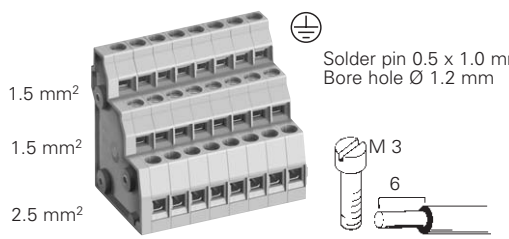


**Type 8195 D/...**
wire horizontal to PC board

Material: **Type 8195 D/...** and **Type 8195 V/...**
Insulating housing: PA 6/66, UL 94-V-0
Clamping body: tin-plated brass
Contact clip with solder pin: tin-plated
Clamping screw: zinc-plated steel

| | | | | | |
|---|---|---|---|---|---|
| Rated voltages VDE 0110 | | | | | |
| UL ratings | field/factory wiring | No. 30 – 14 AWG | 300 V | 10 A | No. 20 – 12 AWG for PE |
| CSA ratings | | No. 30 – 14 AWG | 300 V | 10 A | No. 20 – 12 AWG for Ground |
| Approvals | | | | | |

| Std. pack | G | T | Poles | Part no. unmarked | Part no. marked |
|---|---|---|---|---|---|
| **Spacing: 5.00 mm** | | | | | |
| 50 | 12.50 | 7.50 | 6 | 25.153.2253.0 | 25.153.0253.0 |
| 50 | 17.50 | 12.50 | 9 | 25.153.2353.0 | 25.153.0353.0 |
| 50 | 22.50 | 17.50 | 12 | 25.153.2453.0 | 25.153.0453.0 |
| 50 | 27.50 | 22.50 | 15 | 25.153.2553.0 | 25.153.0553.0 |
| 50 | 32.50 | 27.50 | 18 | 25.153.2653.0 | 25.153.0653.0 |
| 50 | 37.50 | 32.50 | 21 | 25.153.2753.0 | 25.153.0753.0 |
| 50 | 42.50 | 37.50 | 24 | 25.153.2853.0 | 25.153.0853.0 |
| 20 | 47.50 | 42.50 | 27 | 25.153.2953.0 | 25.153.0953.0 |
| 20 | 52.50 | 47.50 | 30 | 25.153.3053.0 | 25.153.1053.0 |
| 33 to 60pole upon request | | | | | |

| **Initiator connectors** **Spacing: 5.00 mm** | ⏚ jumpered | **Type 8195 D/... VB1** unmarked | marked |
|---|---|---|---|
| 50 | 2 PE + 4 | 25.153.6253.0 | 25.153.4253.0 |
| 50 | 3 PE + 6 | 25.153.6353.0 | 25.153.4353.0 |
| 50 | 4 PE + 8 | 25.153.6453.0 | 25.153.4453.0 |
| 50 | 5 PE + 10 | 25.153.6553.0 | 25.153.4553.0 |
| 50 | 6 PE + 12 | 25.153.6653.0 | 25.153.4653.0 |
| 50 | 7 PE + 14 | 25.153.6753.0 | 25.153.4753.0 |
| 50 | 8 PE + 16 | 25.153.6853.0 | 25.153.4853.0 |
| 50 | 9 PE + 18 | 25.153.6953.0 | 25.153.4953.0 |
| 20 | 10 PE + 20 | 25.153.7053.0 | 25.153.5053.0 |
| 11 PE + 22 up to 20 PE + 40 upon request | | | |

Rated cross section:
1.5 mm², PE 2.5 mm²

Rated current:
10 A

Connection range:
0.5 – 2.5 mm² solid 0.5 – 4.0 mm² (PE)
0.5 – 1.5 mm² fine stranded 0.5 – 2.5 mm² (PE)

250 V/4 kV/3 – Overvoltage category III
*690 V/4 kV/2 – Overvoltage category II
1000 V/4 kV/1 – Overvoltage category I

* max. 600 V for ungrounded networks or expected overvoltage ≤ 4 kV

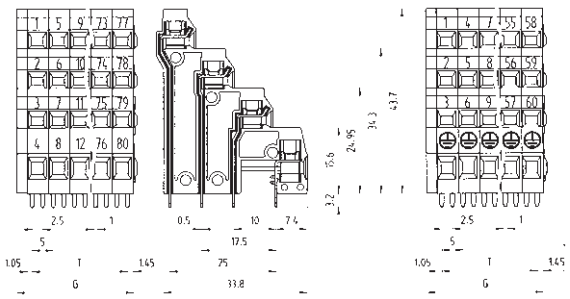

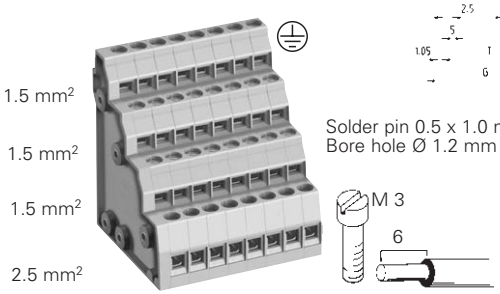


Solder pin 0.5 x 1.0 mm
Bore hole Ø 1.2 mm

**Type 8195 V/...**
wire horizontal to PC board

| | | | | | |
|---|---|---|---|---|---|
| Rated voltages VDE 0110 | | | | | |
| UL ratings | field/factory wiring | No. 30 – 14 AWG | 300 V | 10 A | No. 20 – 12 AWG for PE |
| CSA ratings | | No. 30 – 14 AWG | 300 V | 10 A | No. 20 – 12 AWG for Ground |
| Approvals | | | | | |

| Std. pack | G | T | Poles | Part no. unmarked | Part no. marked |
|---|---|---|---|---|---|
| **Spacing: 5.00 mm** | | | | | |
| 50 | 12.50 | 7.50 | 8 | 25.154.2253.0 | 25.154.0253.0 |
| 50 | 17.50 | 12.50 | 12 | 25.154.2353.0 | 25.154.0353.0 |
| 50 | 22.50 | 17.50 | 16 | 25.154.2453.0 | 25.154.0453.0 |
| 50 | 27.50 | 22.50 | 20 | 25.154.2553.0 | 25.154.0553.0 |
| 50 | 32.50 | 27.50 | 24 | 25.154.2653.0 | 25.154.0653.0 |
| 50 | 37.50 | 32.50 | 28 | 25.154.2753.0 | 25.154.0753.0 |
| 50 | 42.50 | 37.50 | 32 | 25.154.2853.0 | 25.154.0853.0 |
| 20 | 47.50 | 42.50 | 36 | 25.154.2953.0 | 25.154.0953.0 |
| 20 | 52.50 | 47.50 | 40 | 25.154.3053.0 | 25.154.1053.0 |
| 44 to 80pole upon request | | | | | |

| **Initiator connectors** **Spacing: 5.00 mm** | ⏚ jumpered | **Type 8195 V/... VB1** unmarked | marked |
|---|---|---|---|
| 50 | 2 PE + 6 | 25.154.6253.0 | 25.154.4253.0 |
| 50 | 3 PE + 9 | 25.154.6353.0 | 25.154.4353.0 |
| 50 | 4 PE + 12 | 25.154.6453.0 | 25.154.4453.0 |
| 50 | 5 PE + 15 | 25.154.6553.0 | 25.154.4553.0 |
| 50 | 6 PE + 18 | 25.154.6653.0 | 25.154.4653.0 |
| 50 | 7 PE + 21 | 25.154.6753.0 | 25.154.4753.0 |
| 50 | 8 PE + 24 | 25.154.6853.0 | 25.154.4853.0 |
| 50 | 9 PE + 27 | 25.154.6953.0 | 25.154.4953.0 |
| 20 | 10 PE + 30 | 25.154.7053.0 | 25.154.5053.0 |
| 11 PE + 33 up to 20 PE + 60 upon request | | | |

Bore hole plan **Type 8195 D/...** and **Type 8195 V/...**

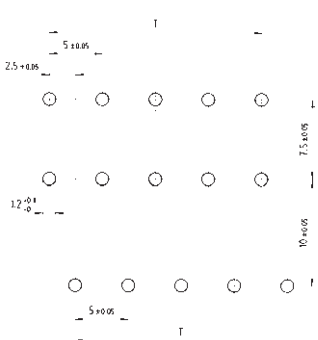

# PC board connectors, rising cage clamp system
# Spacing: 7.50 mm

**wiecon** PCB

Rated cross section:
4.0 mm²

Rated current:
30 A

Connection range:
0.14 – 6.0 mm² solid/
0.14 – 4.0 mm² fine stranded

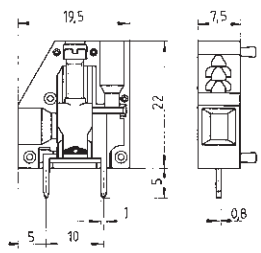


Material:
Insulating housing: PA 66/6 gray, UL 94-V-0
Clamping body: zinc-plated steel
Contact clip with solder pin:
tin-plated E copper
Clamping screw: zinc-plated steel

Rated voltages:
Spacing: 7.50 mm
500 V/6 kV/3 – Overvoltage category III
1000 V/6 kV/2 – Overvoltage category II
1000 V/6 kV/1 – Overvoltage category I

Spacing: 10.00 mm, UL 600 V, CSA 600 V
690 V/8 kV/3 – Overvoltage category III
1000 V/8 kV/2 – Overvoltage category II
1000 V/8 kV/1 – Overvoltage category I

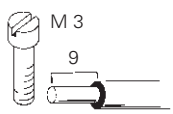


Solder pin 0.8 x 1.0 mm
Bore hole Ø 1.3 mm

**Type 8375**
wire horizontal to PC board

| | | | |
|---|---|---|---|
| Rated voltages VDE 0110 | | No. 22/30 – 10 AWG | 300 V 30/35 A |
| UL ratings | field/factory wiring | No. 22 – 10 AWG | 300 V/600 V* 30 A |
| CSA ratings | | | |
| Approvals | | | |

| | | Type | Part no. | Std. pack |
|---|---|---|---|---|
| **Spacing: 7.50 mm** | | | | |
| Single poles, snap together | 1pole | 8375 | 25.700.0153.0 | 100 |
| **Accessories** | | | | |
| **Spacing: 10.00 mm** | | | | |
| Spacer (to increase the contact spacing from 7.50 to 10.00 mm) | | | 07.300.2753.0 | 50 |
| Test plug, red | | ST 2/2,3 | Z5.553.2921.0 | 10 |
| Marking strips | unmarked | 9705 A/7,5/10 | 04.242.7553.0 | 25 |
| 1 – 10, 11 – 20 usw. 991 – 999 | [1]marked | 9705 A/7,5/10 B | 04.842.7553.0 | 25 |
| Tear-off marking strip | marked. 1, 2, 3 ... 0 | 9704 A/1-0 B | 04.841.2150.0 | 25 |
| Single tags | unmarked | 9705 A | 04.242.0850.0 | 500 |
| | [1]marked | 9705 AB | 04.842.0850.0 | 500 |

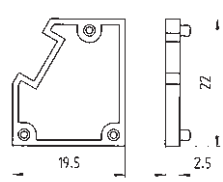


[1] marking upon request

* 600 V with spacer between each pole

Rated cross section: 10.0 mm²

Rated current: 59 A
(related to an ambient temperature of 20°C,
the rated cross section and max. number of poles)

Connection range:
0.50 – 10.0 mm² ein-/fine stranded

400 V/6 kV/3 – Overvoltage category III
690 V/6 kV/2 – Overvoltage category II
1000 V/6 kV/1 – Overvoltage category I

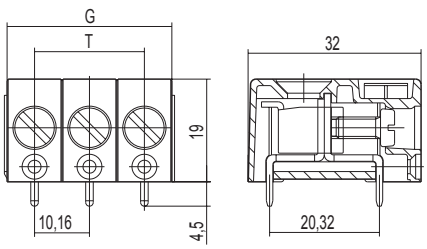


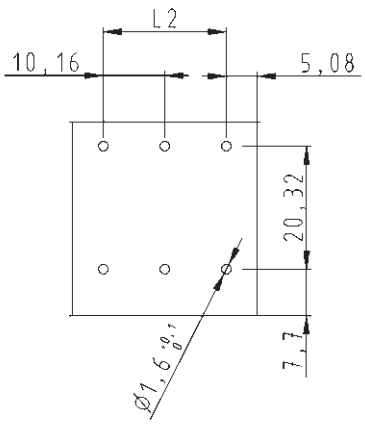

Solder pin 1.2 x 1.4 mm
Bore hole Ø 1.6 mm

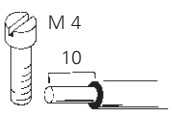


**available from 09/2001**

## Type 7573 L2.../W

| | | | | |
|---|---|---|---|---|
| Rated voltages VDE 0110 | | | | |
| UL ratings | field/factory wiring | No. 22 – 8 AWG | 300 V | 10 A |
| CSA ratings | | No. 22 – 8 AWG | 300 V | 10 A |
| Approvals | | | | |

| Std. pack | G | T | Poles | Part no. | |
|---|---|---|---|---|---|
| **Spacing: 10.16 mm** | | | | unmarked | |
| 50 | 10.16 | | 1 | 27.002.6153.0 | |
| 50 | 30.48 | 20.32 | 3 | 27.002.6353.0 | |
| 50 | 40.64 | 30.48 | 4 | 27.002.6453.0 | |

# wiecon PCB

Rated cross section:
10 mm²

Rated current:
57 A
(related to an ambient temperature of 20°C,
the rated cross section and max. number of poles)

Connection range:
0.50 – 16.0 mm² solid/
0.50 – 10.0 mm² fine stranded

Rated voltages:
4 solder pins
250 V/4 kV/3 – Overvoltage category III
400 V/4 kV/2 – Overvoltage category III
630 V/4 kV/2 – Overvoltage category II

2 solder pins
630 V/8 kV/3 – Overvoltage category III
800 V/8 kV/2 – Overvoltage category III
1000 V/8 kV/2 – Overvoltage category II

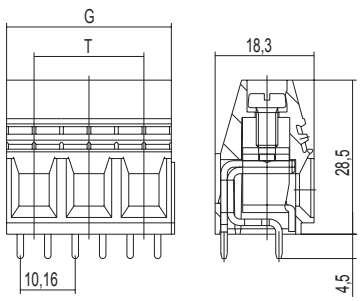


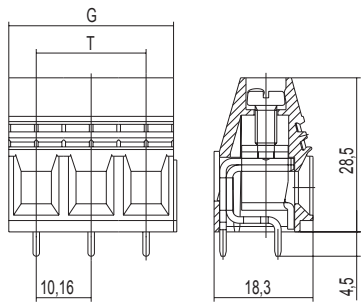


Solder pin 1.2 x 1.2 mm
Bore hole Ø 1.6 mm

4 solder pins

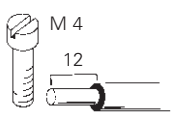


Solder pin 1.2 x 1.2 mm
Bore hole Ø 1.6 mm

2 solder pins

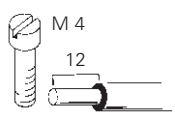


| | | Type 7572 L4 | | Type 7572 L2 | |
|---|---|---|---|---|---|
| Rated voltages VDE 0110 | | | | | |
| UL ratings | field/factory wiring | No. 22 – 8 AWG | 300/150 V 10/40 A | No. 22 – 8 AWG | 300/150 V 10/40 A |
| CSA ratings | | No. 22 – 8 AWG | 300 V 10 A | No. 22 – 8 AWG | 300 V 10 A |
| Approvals | | | | | |

| Std. pack | G | T | Poles | Part no. | Part no. |
|---|---|---|---|---|---|
| **Spacing: 10.16 mm** | | | | | unmarked |
| 50 | 20.32 | 10.16 | 2 | 27.002.0253.0 | 27.002.2253.0 |
| 50 | 30.48 | 20.32 | 3 | 27.002.0353.0 | 27.002.2353.0 |

Rated cross section:
10 mm²

Rated current:
57 A
(related to an ambient temperature of 20°C,
the rated cross section and max. number of poles)

Connection range:
0.50 – 16.0 mm² solid/
0.50 – 10.0 mm² fine stranded

Rated voltages:
1000 V/8 kV/3 – Overvoltage category III

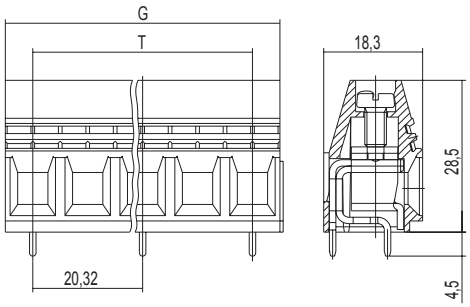

Solder pin 1.2 x 1.2 mm
Bore hole Ø 1.6 mm

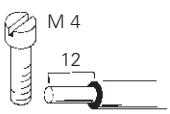


## Type 7572 L2

Rated voltages VDE 0110

CSA
Approvals

No. 22 – 6 AWG 600 V 60 A

| Std. pack | G | T | Poles | Part no. | |
|---|---|---|---|---|---|
| **Spacing: 20.32 mm** | | | | unmarked | |
| 50 | 30.48 | 20.32 | 2 | 27.002.4253.0 | |
| 50 | 50.64 | 40.48 | 3 | 27.002.4353.0 | |

# PC board connectors, rising cage clamp system
# Spacing: 5.08 mm

**wiecon** PCB

Rated cross section:
4.0 mm² solid/
2.5 mm² fine stranded

Rated current type 8276: 26 A
Rated current type 8276 TKS: 15 A

Connection range:
0.14 – 4.0 mm² solid/
0.14 – 2.5 mm² fine stranded

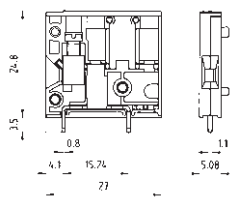

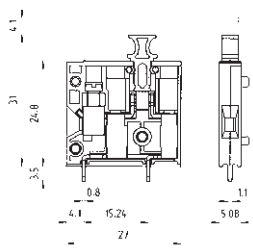

250 V/4 kV/3 – Overvoltage category III
400 V/4 kV/2 – Overvoltage category II
1000 V/4 kV/1 – Overvoltage category I

Solder pin 0.8 x 1.1 mm
Bore hole Ø 1.4 mm

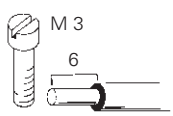

Solder pin 0.8 x 1.1 mm
Bore hole Ø 1.4 mm

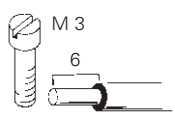


| | | Type 8276<br>Feed through block | | | Type 8276 TKS<br>Plunger disconnect block | | |
|---|---|---|---|---|---|---|---|
| Rated voltages VDE 0110 | | | | | | | |
| UL ratings | field/factory wiring | No. 30 – 14 AWG | 300 V | 15/23 A | No. 30 – 14 AWG | 300 V | 15 A |
| CSA ratings | | No. 30 – 14 AWG | 300 V | 20 A | No. 30 – 14 AWG | 300 V | 15 A |
| Approvals | | | | | | | |

| | Type | Part no. | Std. pack | Type | Part no. | Std. pack |
|---|---|---|---|---|---|---|
| **Spacing: 5.08 mm** | | | | | | |
| Single poles, snap together 1pole<br>Pre-assembled pole configurations upon request | 8276 | 25.720.1353.0 | 100 | 8276 TKS | 25.720.1453.0 | 100 |
| **Accessories** | | | | | | |
| Adhesive marking strips | 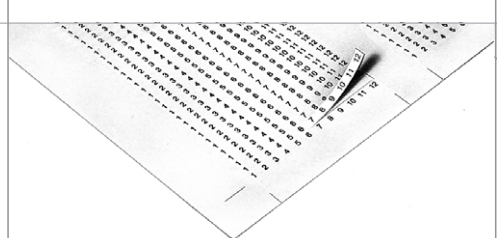 | | | 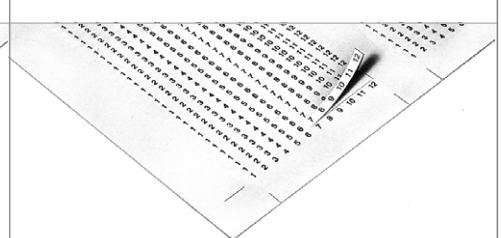 | | |
| | 1 – 12 | 04.007.4089.0 | 1 | 1 – 12 | 04.007.4089.0 | 1 |
| | 13 – 24 | 04.007.4189.0 | 1 | 13 – 24 | 04.007.4189.0 | 1 |
| | 25 – 36 | 04.007.4289.0 | 1 | 25 – 36 | 04.007.4289.0 | 1 |
| | 37 – 48 | 04.007.4389.0 | 1 | 37 – 48 | 04.007.4389.0 | 1 |
| | 49 – 60 | 04.007.4489.0 | 1 | 49 – 60 | 04.007.4489.0 | 1 |
| | 61 – 72 | 04.007.4589.0 | 1 | 61 – 72 | 04.007.4589.0 | 1 |
| | 73 – 84 | 04.007.4689.0 | 1 | 73 – 84 | 04.007.4689.0 | 1 |
| | 85 – 96 | 04.007.4789.0 | 1 | 85 – 96 | 04.007.4789.0 | 1 |
| | 97 – 108 | 04.007.4889.0 | 1 | 97 – 108 | 04.007.4889.0 | 1 |
| Test plug, red | ST 2/2,3 | Z5.553.2921.0 | | ST 2/2,3 | Z5.553.2921.0 | 10 |
| | Material: Type 8276<br>Insulating housing: PA 66/6 gray, UL 94-V-0<br>Clamping body: nickel-plated brass<br>Contact clip with solder pin:<br>tin-plated E copper<br>Clamping screw: zinc-plated steel | | | Material: Type 8276 TKS<br>Insulating housing: PA 66/6 gray, UL 94-V-0<br>Plunger: PA 66/6 orange, UL 94-V-0<br>Clamping body: nickel-plated brass<br>Contact spring with solder pin:<br>special copper alloy, tin-plated<br>Clamping screw: zinc-plated steel<br>Disconnect knife: tin-plated E copper | | |

# PC board connectors, rising cage clamp system
# Spacing: 5.08 mm

Rated cross section:
2.5 mm²

Rated current:
6.3 A**

Connection range:
0.14 – 4.0 mm² solid/
0.14 – 2.5 mm² fine stranded

250 V/4 kV/3 – Overvoltage category III
*690 V/4 kV/2 – Overvoltage category II
1000 V/4 kV/1 – Overvoltage category I

* max. 600 V for ungrounded networks or expected overvoltage ≤ 4 kV

** voltage and current ratings are determined by the inserted G fuse.
6.3 A up to a loss of 1.6 W

For the selection and use of G fuses follow IEC 60 127-2/DIN VDE 0820 T2.

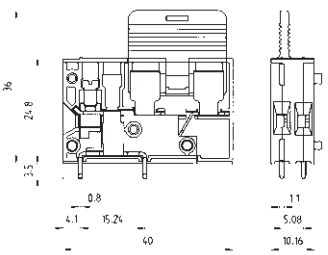


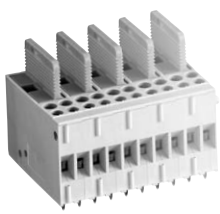

Solder pin 0.8 x 1.1 mm
and 0.5 x 1.1 mm
Bore hole Ø 1.4 mm

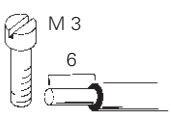


## Type 8276 Si-D

Ground feed through block (for 5 x 20 fuses)

| | | |
|---|---|---|
| Rated voltages VDE 0110 | No. 30 – 14 AWG | 300 V 6,3 A |
| UL ratings | No. 30 – 14 AWG | 300 V 6,3 A |
| CSA ratings | | |
| Approvals | | |

| | Type | Part no. | Std. pack |
|---|---|---|---|
| **Spacing: 5.08 mm** | | | |
| Single poles, snap together 1pole<br>Pre-assembled pole configurations upon request | 8276 Si-D | 25.720.1653.0 | 100 |
| **Accessories** | | | |
| Adhesive marking strips | 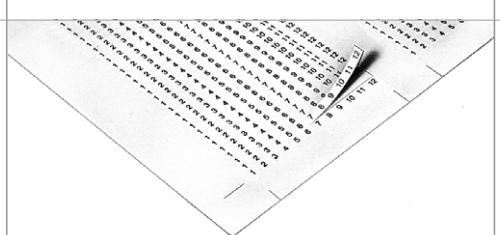 | | |
| | 1 – 12 | 04.007.4089.0 | 1 |
| | 13 – 24 | 04.007.4189.0 | 1 |
| | 25 – 36 | 04.007.4289.0 | 1 |
| | 37 – 48 | 04.007.4389.0 | 1 |
| | 49 – 60 | 04.007.4489.0 | 1 |
| | 61 – 72 | 04.007.4589.0 | 1 |
| | 73 – 84 | 04.007.4689.0 | 1 |
| | 85 – 96 | 04.007.4789.0 | 1 |
| | 97 – 108 | 04.007.4889.0 | 1 |
| unmarked for own marking | | 04.007.3989.0 | 1 |
| Test plug, red | ST 2/2,3 | Z5.553.2921.0 | 10 |
| | Material: Type 8276 Si-D<br>Insulating housing: PA 66/6 gray, UL 94-V-0<br>Fuse holder: PA 66/6 orange, UL 94-V-0<br>Clamping body: nickel-plated brass<br>Contact clip with solder pin:<br>special copper alloy, tin-plated<br>Contact spring with solder pin:<br>special copper alloy, tin-plated<br>Clamping screw: zinc-plated steel | | |

# Type 8105 B, *RAST 5* connection, PC board pluggables, tab connectors

## *wiecon* PCB

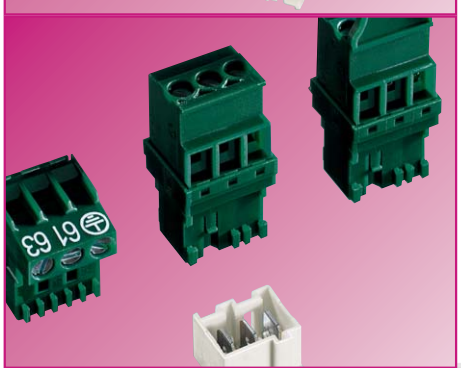

Technological advancements often appear first in electrical appliances. Printed circuit boards, which centralize and conduct signal and power to equipment, serve as a primary and essential function in this technology. Wieland Electric has designed advanced pluggable PC board screw connectors as an integral component to printed circuit boards. Using RAST 5 technology, a European standard for appliance wiring and component design, Wieland offers a wide selection of PC board connectors for the manufacture of advanced electrical appliances.

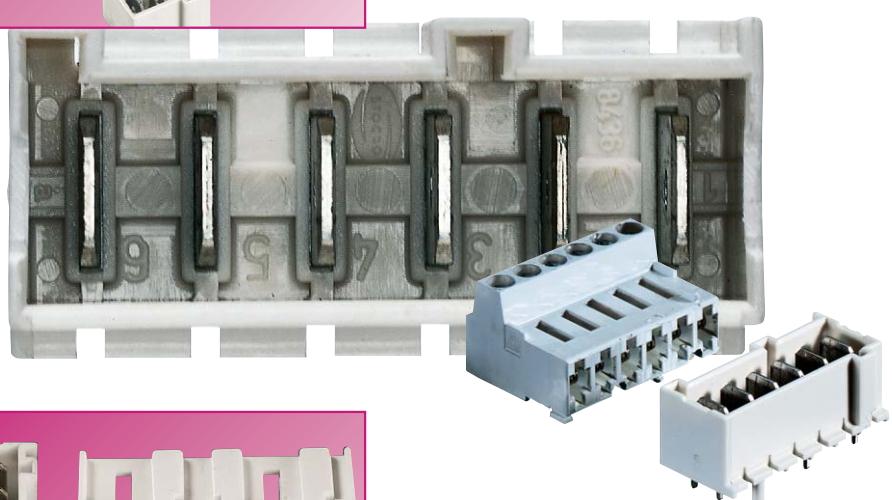

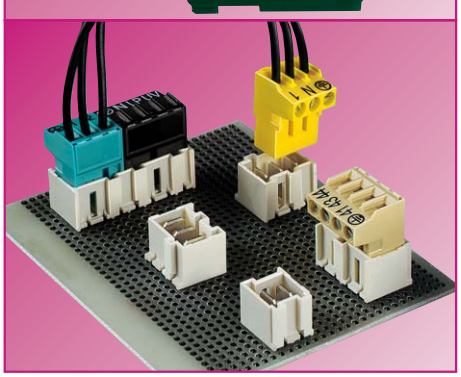

The fixed coding facilities (without coding strip) of the 8105 type are designed for the RAST 5 standard and meets all current requirements of "white goods". The same applies for the different versions, i.e. with vertical connection right and left in addition to the horizontal one, or flat blade connectors in straight design.

They are all based on a rated current of 10A. The pole configurations range from 2 to 7 poles. Both fine stranded wires of 0.14 $mm^2$ to 2.5 $mm^2$ , with and without ferrules, and solid wires of 0.14 $mm^2$ to 4 $mm^2$ can be connected.

wiecon

| | | Page 382 | Page 382 | Page 383 | Page 383 | Page 383 |
|---|---|---|---|---|---|---|
| | | | 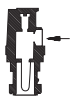 | | | |
| **Type** | | **8105 B/... C...** | **8105 B/...C...VR** | **8105 B/...C...VL** | **8105 F/...GC...** | **8105 F/WC...** |
| **Spacing** | **mm** | **5.00** | **5.00** | **5.00** | **5.00** | **5.00** |
| **Cross section** | **mm²** | **2.5** | **2.5** | **2.5** | **–** | **–** |
| **Number of poles** | | **2 – 7** | **2 – 7** | **2 – 7** | **2 – 7** | **2 – 7** |



## *RAST 5*
## Coding plan

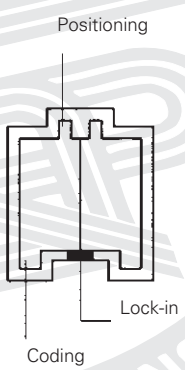


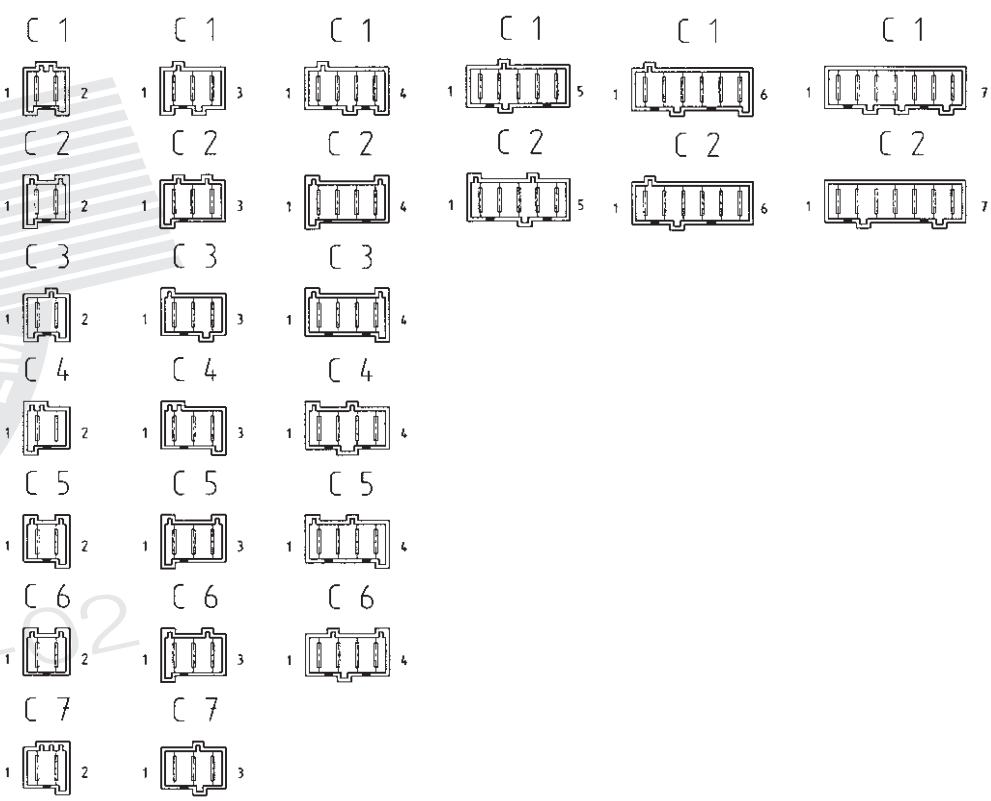


IERTES
O 9001
SSICHERUNGSSYSTEM
-Nr. 14 194-02

# *RAST 5*
## PC board pluggables, spacing: 5.00 mm

**wiecon** PCB

Rated cross section:
2.5 mm²

Rated current: 10 A

Connection range:
0.20 – 4.0 mm² solid/
0.14 – 2.5 mm² fine stranded

250 V/4 kV/3 – Overvoltage category III
400 V/4 kV/2 – Overvoltage category II
1000 V/4 kV/1 – Overvoltage category I

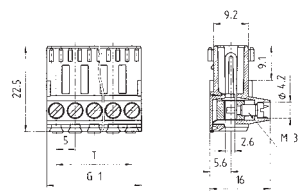


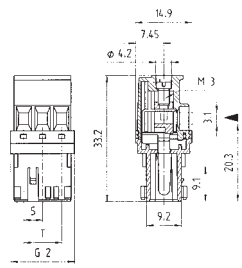


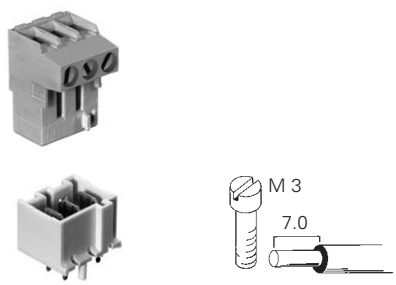


**Type 8105 B/... C... OB**

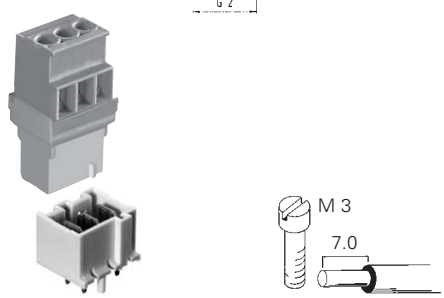


**Type 8105 B/... C... VR OB**

| | | | | | | | |
|---|---|---|---|---|---|---|---|
| Rated voltages VDE 0110 | | | | | | | |
| UL ratings | | | No. 26 – 12 AWG | 300 V | 10 A | No. 26 – 12 AWG | 300 V | 10 A |
| CSA ratings | | | No. 26 – 12 AWG | 300 V | 10 A | No. 26 – 12 AWG | 300 V | 10 A |
| Approvals | | | | | | | |

| Std. pack | Poles | Code | Part no. | Part no. |
|---|---|---|---|---|
| **PC board pluggables / tab connectors** | | | unmarked | unmarked |
| 100 | 2 | C0 | 15.000.0253.0 | 15.020.0253.0 |
| 100 | | C1 | 15.001.0253.0 | 15.021.0253.0 |
| 100 | | C2 | 15.002.0253.0 | 15.022.0253.0 |
| 100 | | C3 | 15.003.0253.0 | 15.023.0253.0 |
| 100 | | C4 | 15.004.0253.0 | 15.024.0253.0 |
| 100 | | C5 | 15.005.0253.0 | 15.025.0253.0 |
| 100 | | C6 | 15.006.0253.0 | 15.026.0253.0 |
| 100 | | C7 | 15.007.0253.0 | 15.027.0253.0 |
| 100 | 3 | C0 | 15.000.0353.0 | 15.020.0353.0 |
| 100 | | C1 | 15.001.0353.0 | 15.021.0353.0 |
| 100 | | C2 | 15.002.0353.0 | 15.022.0353.0 |
| 100 | | C3 | 15.003.0353.0 | 15.023.0353.0 |
| 100 | | C4 | 15.004.0353.0 | 15.024.0353.0 |
| 100 | | C5 | 15.005.0353.0 | 15.025.0353.0 |
| 100 | | C6 | 15.006.0353.0 | 15.026.0353.0 |
| 100 | | C7 | 15.007.0353.0 | 15.027.0353.0 |
| 50 | 4 | C0 | 15.000.0453.0 | 15.020.0453.0 |
| 50 | | C1 | 15.001.0453.0 | 15.021.0453.0 |
| 50 | | C2 | 15.002.0453.0 | 15.022.0453.0 |
| 50 | | C3 | 15.003.0453.0 | 15.023.0453.0 |
| 50 | | C4 | 15.004.0453.0 | 15.024.0453.0 |
| 50 | | C5 | 15.005.0453.0 | 15.025.0453.0 |
| 50 | | C6 | 15.006.0453.0 | 15.026.0453.0 |
| 50 | 5 | C0 | 15.000.0553.0 | 15.020.0553.0 |
| 50 | | C1 | 15.001.0553.0 | 15.021.0553.0 |
| 50 | | C2 | 15.002.0553.0 | 15.022.0553.0 |
| 50 | 6 | C0 | 15.000.0653.0 | 15.020.0653.0 |
| 50 | | C1 | 15.001.0653.0 | 15.021.0653.0 |
| 50 | | C2 | 15.002.0653.0 | 15.022.0653.0 |
| 50 | 7 | C0 | 15.000.0753.0 | 15.020.0753.0 |
| 50 | | C1 | 15.001.0753.0 | 15.021.0753.0 |
| 50 | | C2 | 15.002.0753.0 | 15.022.0753.0 |

# *RAST 5*
# Tab connectors

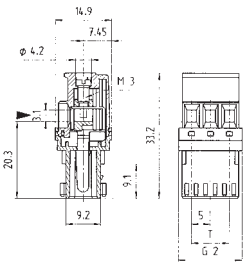

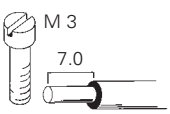


**Bore hole plan,** side view

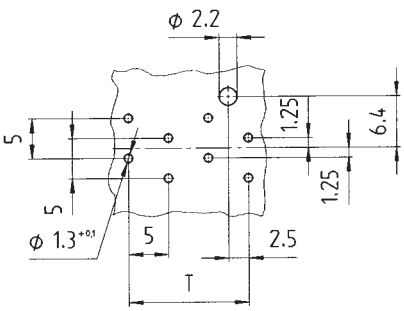


No positioning stud for version
8105 F/... WC ...OB

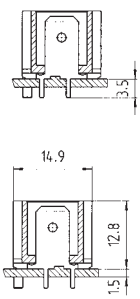


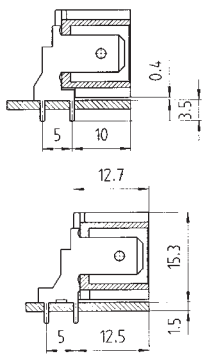

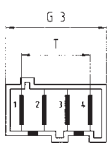


## Type 8105 B/... C... VL OB

| | | |
|---|---|---|
| No. 26 – 12 AWG | 300 V | 10 A |
| No. 26 – 12 AWG | 300 V | 10 A |

## Type 8105 F/... GC ... OB / 8105 F/... WC... OB

| | | |
|---|---|---|
| No. 26 – 12 AWG | 300 V | 10 A |
| No. 26 – 12 AWG | 300 V | 10 A |

Rated voltages VDE 0110
UL ratings
CSA ratings
Approvals

| Part no. | Std. pack | G1 | G2 | G3 | T | Part no. | Part no. |
|---|---|---|---|---|---|---|---|
| unmarked | | | | | ***RAST 5*** | unmarked | unmarked |
| 15.010.0253.0 | 100 | 10 | 11.8 | | 5 | | |
| 15.011.0253.0 | 100 | 10 | 11.8 | 12 | 5 | 15.301.0258.9 | 15.311.0258.9 |
| 15.012.0253.0 | 100 | 10 | 11.8 | 12 | 5 | 15.302.0258.9 | 15.312.0258.9 |
| 15.013.0253.0 | 100 | 10 | 11.8 | 12 | 5 | 15.303.0258.9 | 15.313.0258.9 |
| 15.014.0253.0 | 100 | 10 | 11.8 | 12 | 5 | 15.304.0258.9 | 15.314.0258.9 |
| 15.015.0253.0 | 100 | 10 | 11.8 | 12 | 5 | 15.305.0258.9 | 15.315.0258.9 |
| 15.016.0253.0 | 100 | 10 | 11.8 | 12 | 5 | 15.306.0258.9 | 15.316.0258.9 |
| 15.017.0253.0 | 100 | 10 | 11.8 | 12 | 5 | 15.307.0258.9 | 15.317.0258.9 |
| 15.010.0353.0 | 100 | 15 | 16.8 | | 10 | | |
| 15.011.0353.0 | 100 | 15 | 16.8 | 17 | 10 | 15.301.0358.9 | 15.311.0358.9 |
| 15.012.0353.0 | 100 | 15 | 16.8 | 17 | 10 | 15.302.0358.9 | 15.312.0358.9 |
| 15.013.0353.0 | 100 | 15 | 16.8 | 17 | 10 | 15.303.0358.9 | 15.313.0358.9 |
| 15.014.0353.0 | 100 | 15 | 16.8 | 17 | 10 | 15.304.0358.9 | 15.314.0358.9 |
| 15.015.0353.0 | 100 | 15 | 16.8 | 17 | 10 | 15.305.0358.9 | 15.315.0358.9 |
| 15.016.0353.0 | 100 | 15 | 16.8 | 17 | 10 | 15.306.0358.9 | 15.316.0358.9 |
| 15.017.0353.0 | 100 | 15 | 16.8 | 17 | 10 | 15.307.0358.9 | 15.317.0358.9 |
| 15.010.0453.0 | 50 | 20 | 21.8 | | 15 | | |
| 15.011.0453.0 | 50 | 20 | 21.8 | 22 | 15 | 15.301.0458.9 | 15.311.0458.9 |
| 15.012.0453.0 | 50 | 20 | 21.8 | 22 | 15 | 15.302.0458.9 | 15.312.0458.9 |
| 15.013.0453.0 | 50 | 20 | 21.8 | 22 | 15 | 15.303.0458.9 | 15.313.0458.9 |
| 15.014.0453.0 | 50 | 20 | 21.8 | 22 | 15 | 15.304.0458.9 | 15.314.0458.9 |
| 15.015.0453.0 | 50 | 20 | 21.8 | 22 | 15 | 15.305.0458.9 | 15.315.0458.9 |
| 15.016.0453.0 | 50 | 20 | 21.8 | 22 | 15 | 15.306.0458.9 | 15.316.0458.9 |
| 15.010.0553.0 | 50 | 25 | 26.8 | | 20 | | |
| 15.011.0553.0 | 50 | 25 | 26.8 | 27 | 20 | 15.301.0558.9 | 15.311.0558.9 |
| 15.012.0553.0 | 50 | 25 | 26.8 | 27 | 20 | 15.302.0558.9 | 15.312.0558.9 |
| 15.010.0653.0 | 50 | 30 | 31.8 | | 25 | | |
| 15.011.0653.0 | 50 | 30 | 31.8 | 32 | 25 | 15.301.0658.9 | 15.311.0658.9 |
| 15.012.0653.0 | 50 | 30 | 31.8 | 32 | 25 | 15.302.0658.9 | 15.312.0658.9 |
| 15.010.0753.0 | 50 | 35 | 36.8 | | 30 | | |
| 15.011.0753.0 | 50 | 35 | 36.8 | 37 | 30 | 15.301.0758.9 | 15.311.0758.9 |
| 15.012.0753.0 | 50 | 35 | 36.8 | 37 | 30 | 15.302.0758.9 | 15.312.0758.9 |

# *RAST 5* connection
# Potential distributor for PC board, spacing: 5.00 mm

**wiecon** PCB

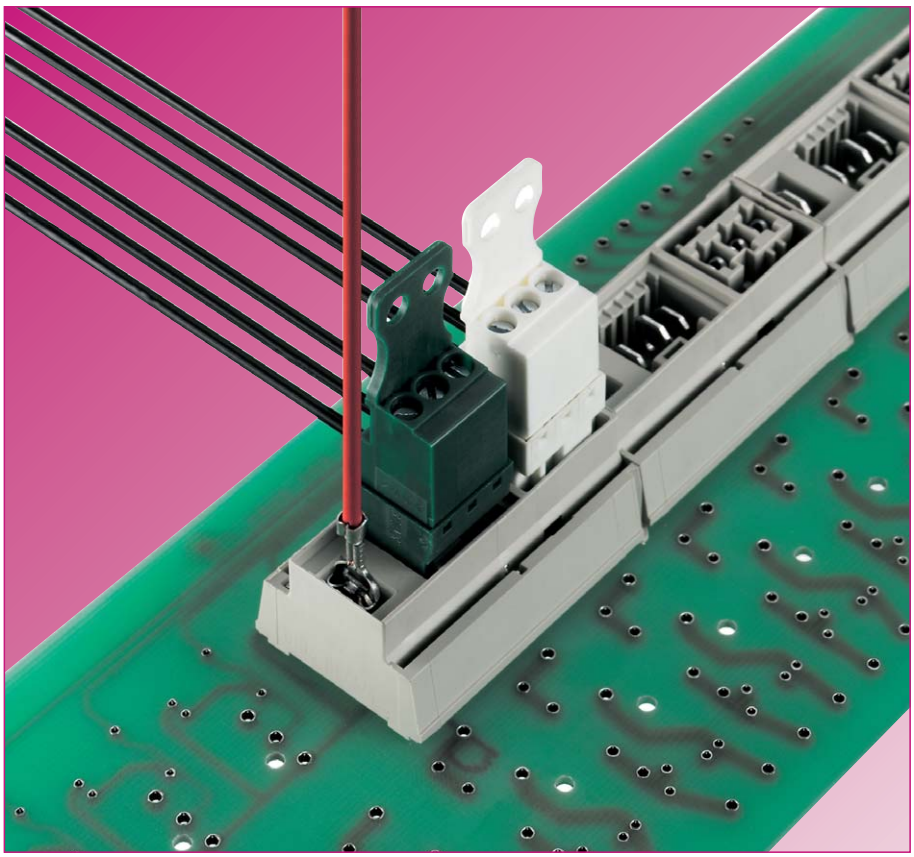

## Custom connection modules in *RAST 5* connection style

**Main field of application:**
*RAST 5* connection style:
"white" and "red goods"

**Major benefits of *RAST 5*:**
- fixed integrated coding
- potential for mismating eliminated
- available in different colors
  (benefit: plug connectors and headers are immediately and correctly assigned e. g. in assembly line mounting)
- ideal for off-site harness assembly

**Wieland** offers custom modifications e. g. *RAST 5* connection module units with
- integrated jumper
  (e. g. ground connection)
- plug connectors and headers in the connection module for potential distribution ( current-carrying part must always be the plug connector)
- any plug connector/header combination in different pole configurations
- different colors

Rated cross section:
2.5 mm²

Rated current: 10 A

Connection range:
0.14 – 4.0 mm² solid/
0.14 – 2.5 mm² fine stranded

250 V/2.5 kV/3 – Overvoltage category III
*690 V/2.5 kV/2 – Overvoltage category II
1000 V/2.5 kV/1 – Overvoltage category I

Number of poles: 2 – 7

* max. 600 V for ungrounded networks or expected overvoltage ≤ 4 kV

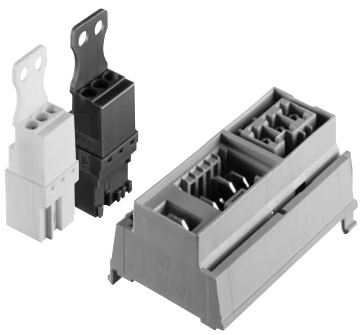

**Type 8105 BF/3/4**

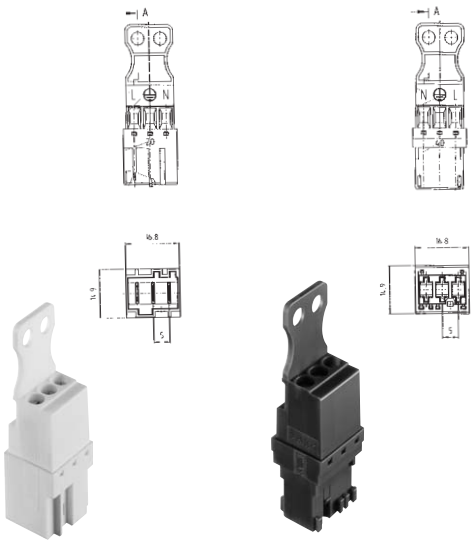

Header

Plug

Rated voltages VDE 0110
UL ratings
CSA ratings – pending
Approvals

| | Type | Part no. | Std. pack | Type | Part no. | Std. pack |
|---|---|---|---|---|---|---|
| **Spacing: 5.00 mm** | | | | | | |
| | | 99.243.3564.7 | 100 | Header with handle, white | 99.239.3564.7 | 100 |
| | | | | Plug with handle, green | 99.259.3564.7 | 100 |

# Termination module
# TM 6 / TM 12

wiecon TER

External wiring

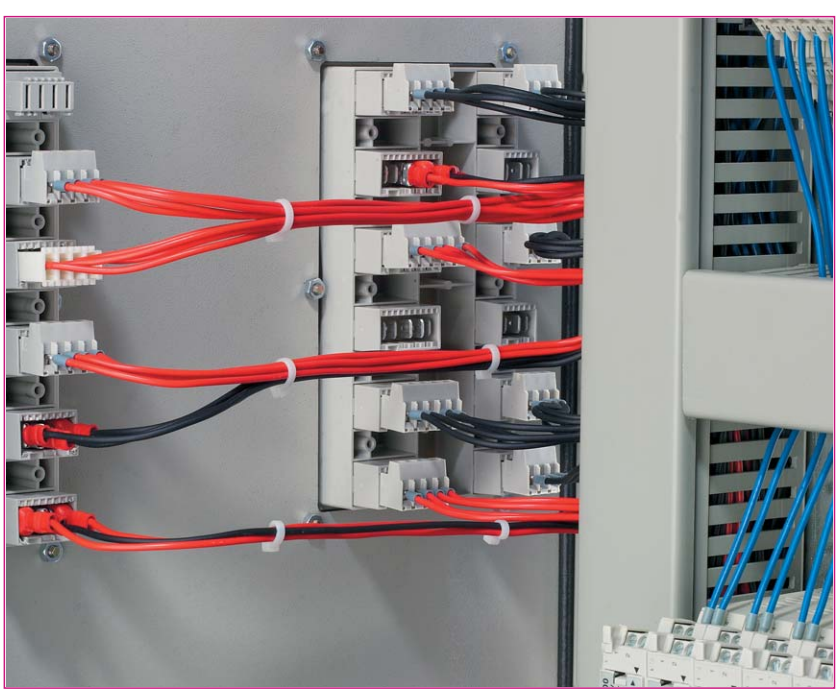

Internal wiring

## *RAST 5* connection (IP 54 rated) Termination Modules for Industrial Plant Construction

The time consuming hard wiring cable connections to control cabinets can now be avoided. The modular *RAST 5* termination module by Wieland is a low cost and faster method to connect control cabinets for industrial plant construction.

This wiring system with its pre-assembled cable harness and coded connectors was developed to optimize the "start-up" of industrial plants.

Because the wires and codings are 100 percent tested, manufacturing is time and cost efficient and installation is vastly simplified.

**The benefits compared to former PG gland wiring are obvious:**

- installation times reduced by 80 % compared to traditional techniques
- time and cost saving pre-assembled cables
- Cable connections are IP 54 rated
- no errors as mismating is impossible
- no specialists required to complete external wiring

# wiecon

The external *RAST 5* connectors are available in 3 to 5 pole configurations. Their secure coding prevents mismating. By means of marking labels the headers can be quickly assigned to the plug connectors in multi-pole modules.

External connection lines with special connectors, which provide sealing with IP 54 protection, are delivered with pre-assembled custom cables.

The other cable ends can also be fitted with further components such as DIN outlet boxes for temperature signal conditioners.

Internal wiring is completed either with insulated
- *RAST 5* tab connectors
- *RAST 5* screw connectors
- *RAST 5* crimp connectors

**System design**
2 basic modules are available
- module with 6 slots = TM 6
- module with 12 slots = TM 12

All these versions are coded to prevent mismating, meaning that the slots in the module are all different. Two different versions are available for each type.

**Cable types for the external lines**

The following standard cable types are available:
- Ölflex Quattro 150 in 3, 4 and 5 pole configurations
- Ölflex Quattro 150 CY (shielded version) in 3, 4, and 5 pole configurations

The system provides a large number of combinations of modules, codings and cables and enables various custom wiring solutions.
Depending on the order quantities, special module versions and cables are also possible.

**To try out the variations, you can order the function set TM 6-5 with cables.**

**Technical information on the TM modules and external cables:**

Connector cross section:
1.5 mm$^2$ (standard)

Rated voltage:
250 V/4 kV/3 – Overvoltage category III

Rated current: 10 A

Approvals (pending):
UL, CSA and VDE

**TM 6**

The TM6 module is available in versions:

- 6 slots, 3pole = type **TM 6-3**
- 6 slots, 4pole = type **TM 6-4**
- 6 slots, 5pole = type **TM 6-5**

**TM 12**

The TM 12 module is available in versions:
12 slots in two rows of 6

- 3pole / 3pole = type **TM 12-33**
- 3pole / 4pole = type **TM 12-34**
- 4pole / 4pole = type **TM 12-44**
- 3pole / 5pole = type **TM 12-35**

**Example of TM module 6/12 in a control cabinet**

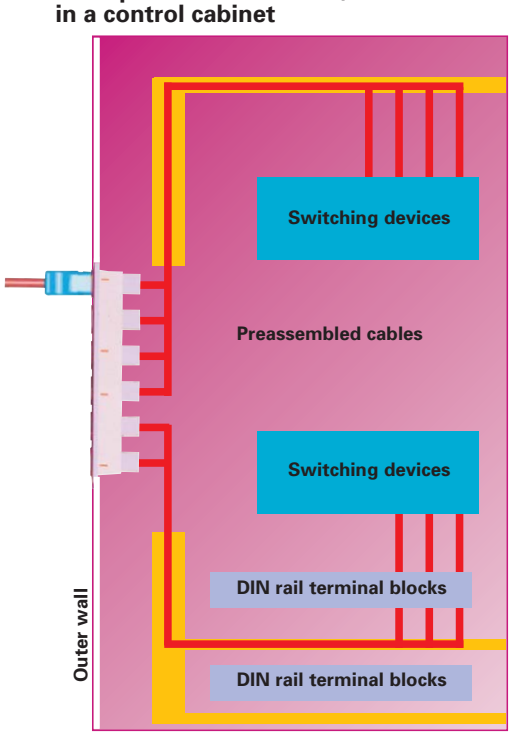

# Function set TM 6

wiecon TER

Function set consisting of
1 x TM 6-5, incl. cable set 6 x 10 m
type Ölflex Quattro 5 x 1.5 mm²
with one 5pole connector each in tab version

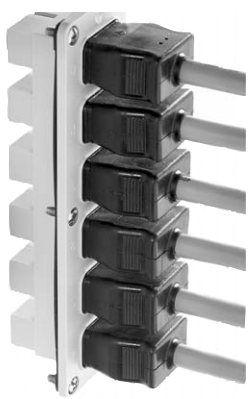

6 slots, 3pole =
type **TM 6-3**

6 slots, 4pole =
type **TM 6-4**

## Typ TM 6-5 F

| Type | Part no. | Std. pack |
|---|---|---|
| TM 6-5 F | 99.483.0000.0 | |
| | | |
| | | |
| | | |

## Typ TM 6-3

| Type | Part no. | Std. pack |
|---|---|---|
| TM 6-3<br>coding upon request | | upon<br>request |
| | | |
| | | |
| | | |

## Typ TM 6-4

| Type | Part no. | Std. pack |
|---|---|---|
| TM 6-4<br>coding upon request | | upon<br>request |
| | | |
| | | |
| | | |

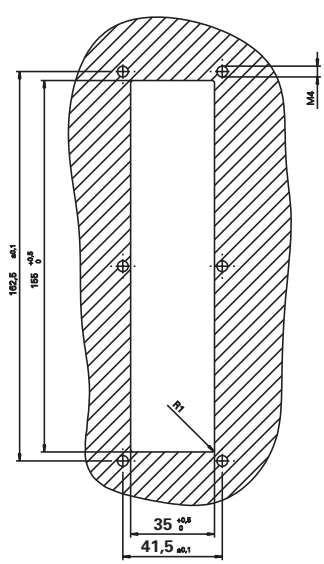


or bore hole
D = 3.8 mm for
self-tapping
screw
05.084.0212.0

Outer dimensions, cut-out and bore hole configuration are the same for all TM 6 versions

6 slots, 5pole =
type **TM 6-5**

## Typ TM 6-5

| Type | Part no. | Std. pack |
|---|---|---|
| TM 6-5 | | upon |
| coding upon request | | request |

## TM 6 cover

fits all pole configurations

| Type | Part no. | Std. pack |
|---|---|---|
| TM 6-X | 15.800.9956.0 | |

## Locking piece

| Type | Part no. | Std. pack |
|---|---|---|
| 3pole | 05.562.5957.1 | |
| 4pole | 05.562.6557.1 | |
| 5pole | 05.562.8257.1 | |

# Function set TM 12

**wiecon** TER

12 slots,
in two rows of 6
3pole / 3pole =
type **TM 12-33**

12 slots,
in two rows of 6
3pole / 4pole =
type **TM 12-34**

12 slots,
in two rows of 6
4pole / 4pole =
type **TM 12-44**

## Typ TM 12-33

| Type | Part no. | Std. pack |
|---|---|---|
| TM 12-33<br>coding upon request | | upon<br>request |
| | | |
| | | |
| | | |

## Typ TM 12-34

| Type | Part no. | Std. pack |
|---|---|---|
| TM 12-34<br>coding upon request | | upon<br>request |
| | | |
| | | |
| | | |

## Typ TM 12-44

| Type | Part no. | Std. pack |
|---|---|---|
| TM 12-44<br>coding upon request | | upon<br>request |
| | | |
| | | |
| | | |

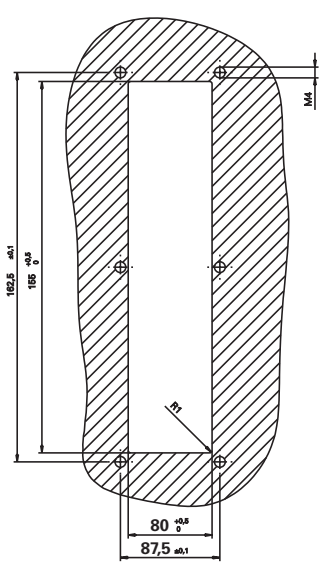


or bore hole
D = 3.8 mm for
self-tapping
screw
05.084.0212.0

Outer dimensions, cut-out and bore hole configuration are the same for all TM 6 versions

12 slots,
in two rows of 6
3pole / 5pole =
type **TM 12-35**

## Typ TM 12-55

| Type | Part no. | Std. pack |
|---|---|---|
| TM 12-35 | | upon |
| coding upon request | | request |

## TM 12 cover

fits all TM 12-XX pole configurations

| Type | Part no. | Std. pack |
|---|---|---|
| TM 12-XX | 15.800.8856.0 | |

## Locking piece

| Type | Part no. | Std. pack |
|---|---|---|
| 3pole | 05.562.5957.1 | |
| 4pole | 05.562.6557.1 | |
| 5pole | 05.562.8257.1 | |

# In-line connector (insulation displacement connection)
# Spacing: 5.00/5.08 mm

**wiecon** ASI

Rated cross section:
0.75 mm²

Rated current:
3 A

Connection range:
0.50 – 0.75 mm² fine stranded

250 V/4 kV/3 – Overvoltage category III
400 V/4 kV/2 – Overvoltage category II
1000 V/4 kV/1 – Overvoltage category I

Current range:
from 3 mA up to 3 A

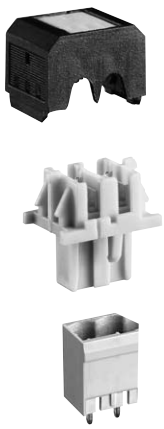

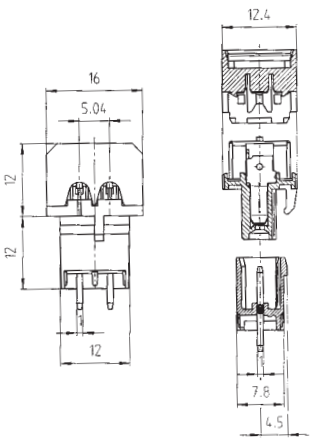


Solder pin 1.0 x 1.0 mm
Bore hole Ø 1.4 mm

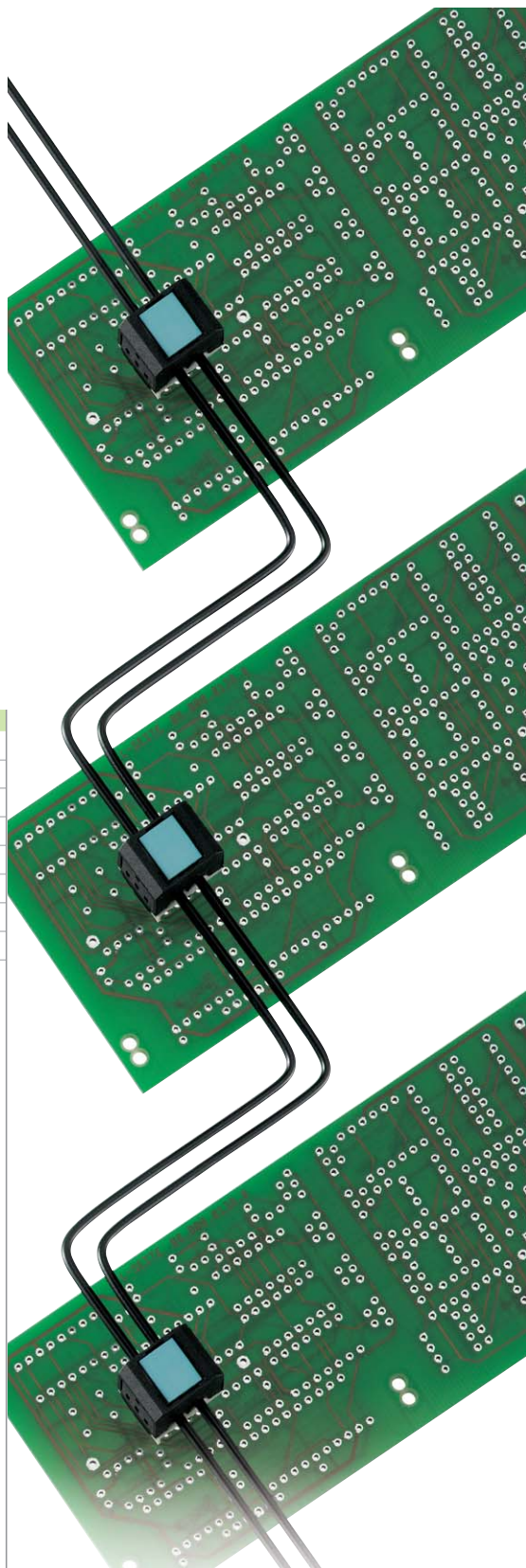

**Typ 8113 BSK/2**

| | | | | |
|---|---|---|---|---|
| Rated voltages VDE 0110 | | | | |
| UL ratings | field/factory wiring | No. 20 – 18 AWG | 300 V | 3 A |
| CSA ratings | | No. 20 – 18 AWG | 300 V | 3 A |
| Approvals | | | | |

| | | Type | Part no. | Std. pack |
|---|---|---|---|---|
| **Spacing: 5.00/5.08 mm** | | | | |
| ASI in-line connector | 2pole | | | |
| Cover | black | | 25.399.9853.0 | 100 |
| Cover | yellow | | 25.399.9853.8 | 100 |
| Cover | red | | 25.399.9853.5 | 100 |
| | (color of plug housing: gray) | | | |
| | | | | |
| Marking tag | green | | 04.240.0953.0 | 100 |

Cables with PVE- and PE-insulated wires can be connected. For others consult factory. The fine stranded copper conductor must have a minimum wire diameter of 0.2 mm. The wire design is based on DIN VDE 0295.

# Insulated header for PC boards
# Spacing: 5.00/5.08 mm

Rated current:
12 A

250 V/4 kV/3 – Overvoltage category III
400 V/4 kV/2 – Overvoltage category II
1000 V/4 kV/1 – Overvoltage category I

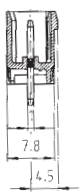

Solder pin 1.0 x 1.0 mm
Bore hole Ø 1.4 mm

**Typ 8113 S/... G, 8213 S/... G**

| | | | |
|---|---|---|---|
| Rated voltages VDE 0110 | plug-in vertical to PC board | | |
| UL ratings | No. 22 – 12 AWG | 250 V | 15 A |
| CSA ratings | No. 22 – 12 AWG | 300 V | 15 A |
| Approvals | | | |

| Std. pack | G | T | Pole | Part no. |
|---|---|---|---|---|
| **Spacing: 5.00 mm** | | | | unmarked |
| 100 | 11.40 | 5 | 2 | 25.330.3253.0 |
| **Spacing: 5.08 mm** | | | | unmarked |
| 100 | 11.56 | 5.08 | 2 | 25.350.3253.0 |

**ASI in-line connector in insulation displacement technology**

The ASI connector was developed for both ASI bus systems and LON and EIBA systems. In these systems, auxiliary supply and information are transferred via two wires of the bus line. The ASI in-line connector, a pluggable PC board connector with insulation displacement technology (IDC), facilitates the required signal tap-off from the actuator or sensor. Wiring of the ASI connector is both easy and effective. Both wires are inserted in the open clamping body of the connector and afterwards the cover is pressed on by means of a vertical closing tool. Connection to the printed circuit board is made by plugging it on to a 2 pole header.

**Note:**
Instead of the special ASI cable, much less expensive standard conductors are used.

Material:

Insulating housing: PA 66/6
CI-index: ≥ 600
Flammability class UL 94-V-0

Contact parts:
Plating: special copper alloy

Assembly:
Special tools for high-volume assembly upon request.

# Marking accessories

wiecon

Material:
Polyamide 66/6
Color: black numbers on white background

## Marking strip
## Spacing: 10 mm

| Type | Part no. | Std. pack |
|---|---|---|
| **for 5 connectors, marked (every 2nd tag)** | | |
| 9705 A/5/10/5 B | 04.842.5553.0 | 25 |

## Marking tag carrier
## for WEB empty housing

04.242.1050.0 200

## Marking tag
## 3-digit

**Single tag**

| Type | Part no. | Std. pack |
|---|---|---|
| **unmarked** | | |
| 9705 A | 04.242.0850.0 | 500 |
| **marked*** | | |
| 9705 AB | 04.842.0850.0 | 500 |

* Please indicate the required marking together with the part number!

**Standard pack = 500 tags**

## Marking tag
## 8 digits

**Single tag**

| Type | Part no. | Std. pack |
|---|---|---|
| **unmarked** | | |
| 9705 AL | 04.242.1553.0 | 500 |
| **marked*** | | |
| 9705 ALB | 04.842.1553.0 | 500 |

* Please indicate the required marking together with the part number!

**Standard pack = 500 tags**

## Marking strip
## Spacing: 10 mm

| Type | Part no. | Std. pack |
|---|---|---|
| **unmarked** | | |
| 9705 A/5/10 | 04.242.5053.0 | 25 |
| **marked*** | | |
| 9705 A/5/10 B | 04.842.5053.0 | 25 |
| **with extended marking surface** | | |
| 9705 AL/5/10 | 04.242.5153.0 | 25 |

* Please indicate the required marking together with the part number!

**Standard pack = 25 strips**
**= 250 tags**

## Marking strip
## Spacing: 5 mm

| Type | Part no. | Std. pack |
|---|---|---|
| 9705 A/5/9 B | 04.842.4953.0 | 25 |

Marking of the strips:
1 ... 9
1 ... 9

**Standard pack = 25 strips**
**= 225 tags**

# Tear-off marking strip with 10 marking tags

| Material: Polyamide 6/66 white/marking black | Marking per tree | Type | Part no. | Std. pack |
|---|---|---|---|---|
| unmarked | | 9704 A | 04.241.1150.0 | 25 |
| marked with the same number | 1 1 1 1 1 1 1 1 1 1 | 9704 A/1 B | 04.841.1150.0 | 25 |
| | 2 2 2 2 2 2 2 2 2 2 | 9704 A/2 B | 04.841.1250.0 | 25 |
| | 3 3 3 3 3 3 3 3 3 3 | 9704 A/3 B | 04.841.1350.0 | 25 |
| | 4 4 4 4 4 4 4 4 4 4 | 9704 A/4 B | 04.841.1450.0 | 25 |
| | 5 5 5 5 5 5 5 5 5 5 | 9704 A/5 B | 04.841.1550.0 | 25 |
| | 6 6 6 6 6 6 6 6 6 6 | 9704 A/6 B | 04.841.1650.0 | 25 |
| | 7 7 7 7 7 7 7 7 7 7 | 9704 A/7 B | 04.841.1750.0 | 25 |
| | 8 8 8 8 8 8 8 8 8 8 | 9704 A/8 B | 04.841.1850.0 | 25 |
| | 9 9 9 9 9 9 9 9 9 9 | 9704 A/9 B | 04.841.1950.0 | 25 |
| | 0 0 0 0 0 0 0 0 0 0 | 9704 A/0 B | 04.841.2050.0 | 25 |
| marked with consecutive numbers | 1 2 3 4 5 6 7 8 9 0 | 9704 A/1-0 B | 04.841.2150.0 | 25 |
| marked with the same capital letters | A A A A A A A A A A | 9704 A/AG B | 04.841.2250.0 | 25 |
| | B B B B B B B B B B | 9704 A/BG B | 04.841.2350.0 | 25 |
| | C C C C C C C C C C | 9704 A/CG B | 04.841.2450.0 | 25 |
| | D D D D D D D D D D | 9704 A/DG B | 04.841.2550.0 | 25 |
| | E E E E E E E E E E | 9704 A/EG B | 04.841.2650.0 | 25 |
| | F F F F F F F F F F | 9704 A/FG B | 04.841.2750.0 | 25 |
| | G G G G G G G G G G | 9704 A/GG B | 04.841.2850.0 | 25 |
| | H H H H H H H H H H | 9704 A/HG B | 04.841.2950.0 | 25 |
| | I I I I I I I I I I | 9704 A/IG B | 04.841.3050.0 | 25 |
| | J J J J J J J J J J | 9704 A/JG B | 04.841.3150.0 | 25 |
| | K K K K K K K K K K | 9704 A/KG B | 04.841.3250.0 | 25 |
| | L L L L L L L L L L | 9704 A/LG B | 04.841.3350.0 | 25 |
| | M M M M M M M M M M | 9704 A/MG B | 04.841.3450.0 | 25 |
| | N N N N N N N N N N | 9704 A/NG B | 04.841.3550.0 | 25 |
| | O O O O O O O O O O | 9704 A/OG B | 04.841.3650.0 | 25 |
| | P P P P P P P P P P | 9704 A/PG B | 04.841.3750.0 | 25 |
| | Q Q Q Q Q Q Q Q Q Q | 9704 A/QG B | 04.841.3850.0 | 25 |
| | R R R R R R R R R R | 9704 A/RG B | 04.841.3950.0 | 25 |
| | S S S S S S S S S S | 9704 A/SG B | 04.841.4050.0 | 25 |
| | T T T T T T T T T T | 9704 A/TG B | 04.841.4150.0 | 25 |
| | U U U U U U U U U U | 9704 A/UG B | 04.841.4250.0 | 25 |
| | V V V V V V V V V V | 9704 A/VG B | 04.841.4350.0 | 25 |
| | W W W W W W W W W W | 9704 A/WG B | 04.841.4450.0 | 25 |
| | X X X X X X X X X X | 9704 A/XG B | 04.841.4550.0 | 25 |
| | Y Y Y Y Y Y Y Y Y Y | 9704 A/YG B | 04.841.4650.0 | 25 |
| | Z Z Z Z Z Z Z Z Z Z | 9704 A/ZG B | 04.841.4750.0 | 25 |
| marked with the same lower case letters | a a a a a a a a a a | 9704 A/AK B | 04.841.4850.0 | 25 |
| | b b b b b b b b b b | 9704 A/BK B | 04.841.4950.0 | 25 |
| | c c c c c c c c c c | 9704 A/CK B | 04.841.5050.0 | 25 |
| | d d d d d d d d d d | 9704 A/DK B | 04.841.5150.0 | 25 |
| | e e e e e e e e e e | 9704 A/EK B | 04.841.5250.0 | 25 |
| | f f f f f f f f f f | 9704 A/FK B | 04.841.5350.0 | 25 |
| | g g g g g g g g g g | 9704 A/GK B | 04.841.5450.0 | 25 |
| | h h h h h h h h h h | 9704 A/HK B | 04.841.5550.0 | 25 |
| | i i i i i i i i i i | 9704 A/IK B | 04.841.5650.0 | 25 |
| | j j j j j j j j j j | 9704 A/JK B | 04.841.5750.0 | 25 |
| | k k k k k k k k k k | 9704 A/KK B | 04.841.5850.0 | 25 |
| | l l l l l l l l l l | 9704 A/LK B | 04.841.5950.0 | 25 |
| | m m m m m m m m m m | 9704 A/MK B | 04.841.6050.0 | 25 |
| | n n n n n n n n n n | 9704 A/NK B | 04.841.6150.0 | 25 |
| | o o o o o o o o o o | 9704 A/OK B | 04.841.6250.0 | 25 |
| | p p p p p p p p p p | 9704 A/PK B | 04.841.6350.0 | 25 |
| | q q q q q q q q q q | 9704 A/QK B | 04.841.6450.0 | 25 |
| | r r r r r r r r r r | 9704 A/RK B | 04.841.6550.0 | 25 |
| | s s s s s s s s s s | 9704 A/SK B | 04.841.6650.0 | 25 |
| | t t t t t t t t t t | 9704 A/TK B | 04.841.6750.0 | 25 |
| | u u u u u u u u u u | 9704 A/UK B | 04.841.6850.0 | 25 |
| | v v v v v v v v v v | 9704 A/VK B | 04.841.6950.0 | 25 |
| | w w w w w w w w w w | 9704 A/WK B | 04.841.7050.0 | 25 |
| | x x x x x x x x x x | 9704 A/XK B | 04.841.7150.0 | 25 |
| | y y y y y y y y y y | 9704 A/YK B | 04.841.7250.0 | 25 |
| | z z z z z z z z z z | 9704 A/ZK B | 04.841.7350.0 | 25 |
| marked with the same symbols | + + + + + + + + + + | 9704 A/+ B | 04.841.7450.0 | 25 |
| | – – – – – – – – – – | 9704 A/– B | 04.841.7550.0 | 25 |
| | / / / / / / / / / / | 9704 A// B | 04.841.7650.0 | 25 |
| | . . . . . . . . . . | 9704 A/. B | 04.841.7750.0 | 25 |
| 1 set of the same numbers = 10 x 25 strips = 2500 numbers | 1 1 1 ... 0 0 0 | 111 to 000 | 04.841.9050.0 | 1 |
| 1 set of cap. letters = 26 x 25 strips = 6500 letters | A A A ... Z Z Z | A to Z GB | 04.841.9150.0 | 1 |
| 1 set of lower case letters = 26 x 25 strips = 6500 letters | a a a ... z z z | a to z KB | 04.841.9250.0 | 1 |

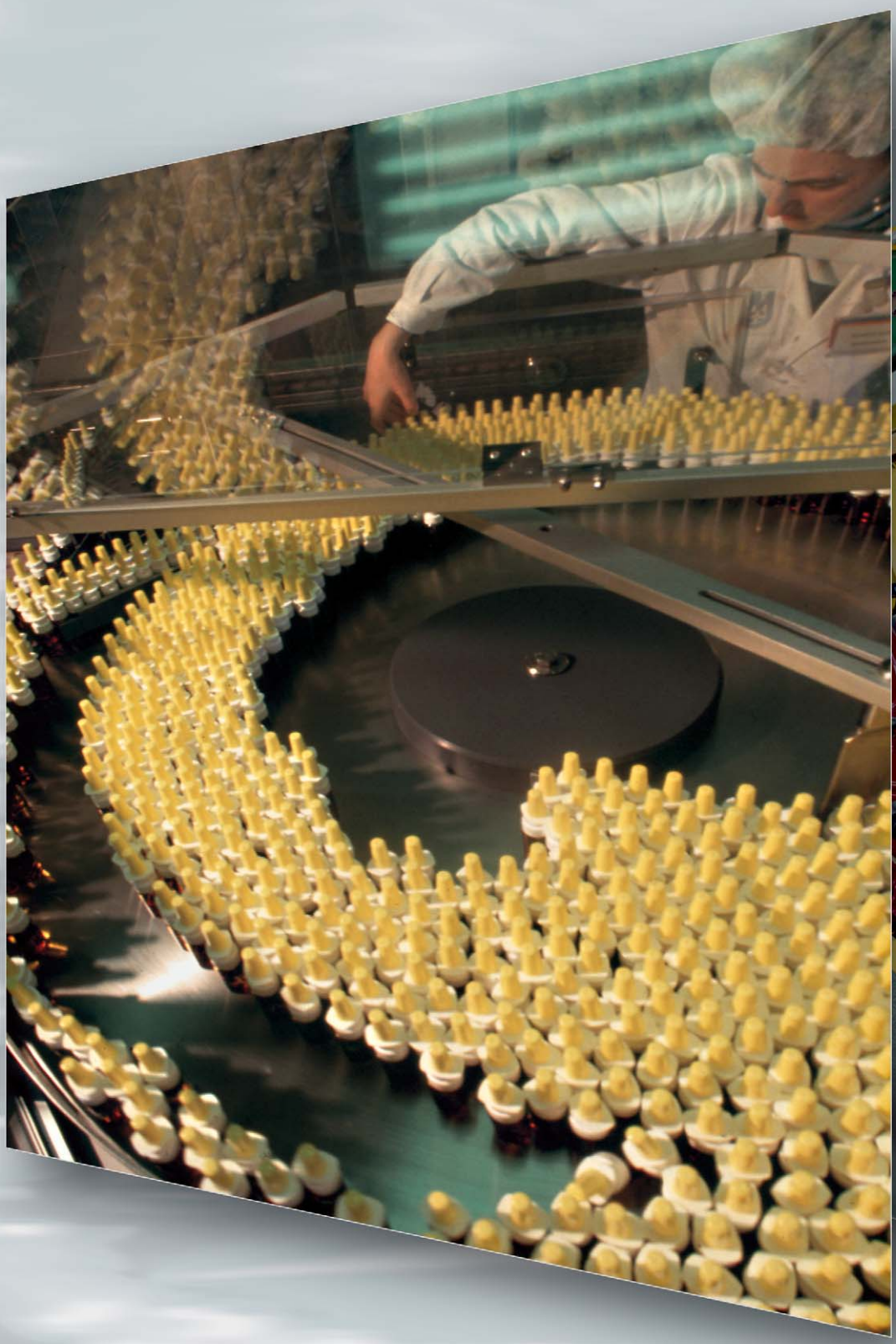

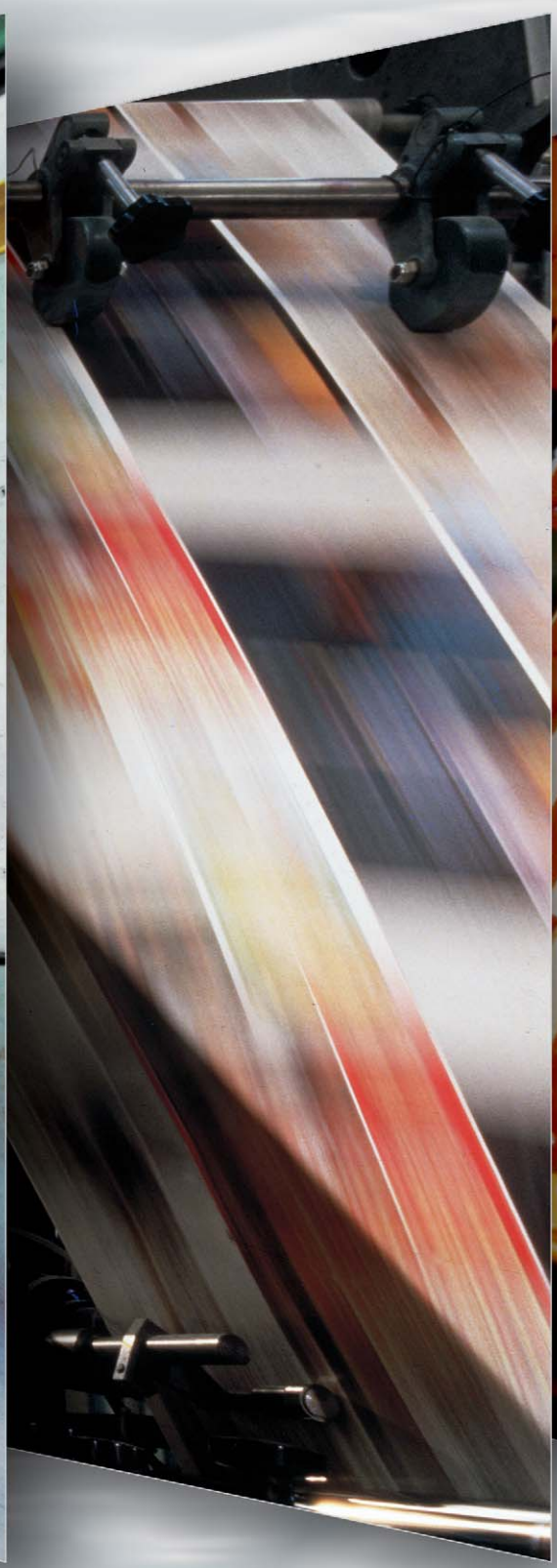

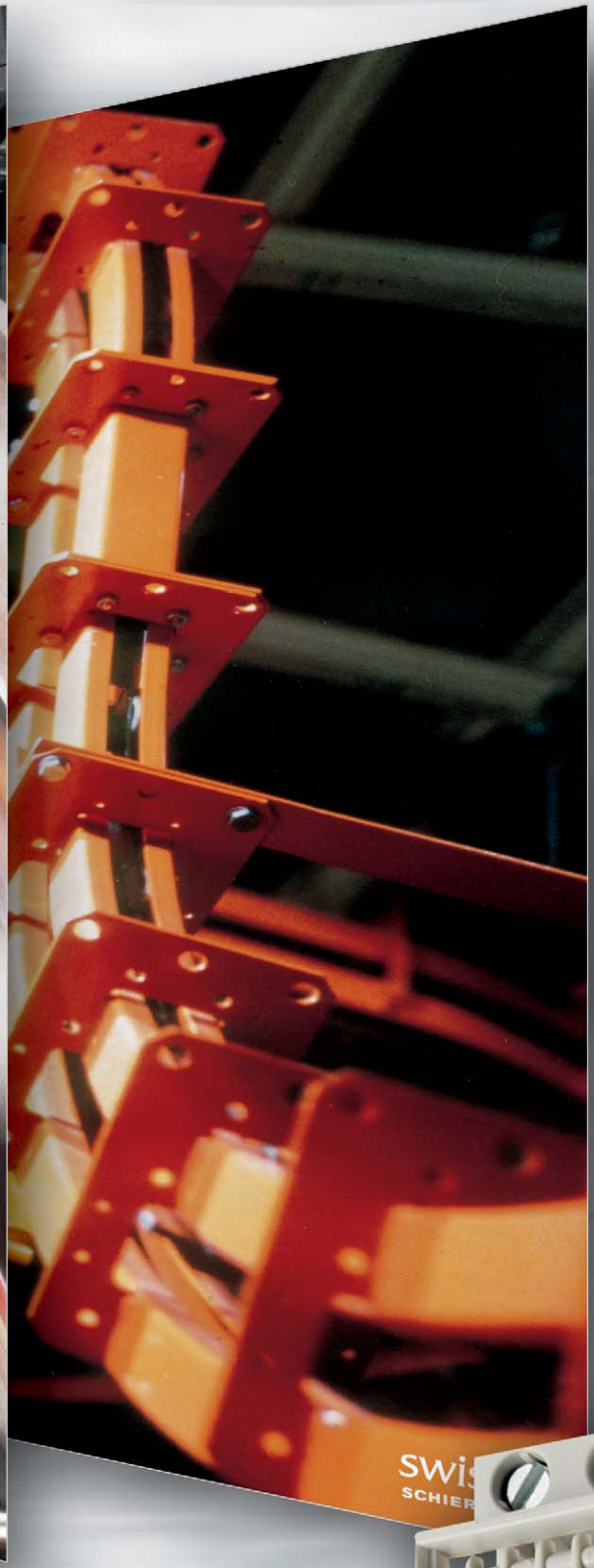

electronics

# Electronic components

# electronics

| | | |
|---|---|---|
| **Decentralised I/O module** | ***ricos*** | |
| **Relay module**<br>Terminal relay 6,2 mm | ***flare***<br><br>**WEG**<br>**RAB**<br>**WR**<br>**WRS** | |
| **Time relay** | ***flare***<br>**WRS** | |
| Solid state relays | ***flare***<br>**WRS**<br>**M-PB** | |
| **Analog measurement technology**<br>Signal Conditioners | ***dipos*** | |
| Wieland Analog Systems | ***cores***<br>**AKB**<br>**AKT**<br>**UET**<br>**UET-P**<br>**KSQ / *dipos*** KSQ | |
| **Wieland power Supply**<br>Switched mode power supply units | ***wipos***<br>**WPS**<br>**NTU**<br>**BGL**<br>**FSR** | |
| **Wieland function module** | ***cemos***<br>**TMS**<br>**LPB / SBS**<br>**SSM**<br>**DNU / DSU**<br>**DRA**<br><br>**SSW** | |
| **Wieland interface system** | **D-SUB**<br>**FLK**<br>**S5** | |
| **Electronic empty housing** | ***dipos***<br>**WEB**<br>**WEB 1001/1002**<br>**WEG**<br>**wieBOX**<br><br>**Subject to change without prior notice** | |



Subject to change without prior notice

# Content

electronics


| | | |
|---|---|---|
| ● | Introduction to field bus systems | Page 404 |
| ● ***ricos*** | Field bus couplers | Page 410 |
| ● ***ricos*** | Decentralised I/O module | Page 412 |
| ● ***ricos*** | Binary I/O modules | Page 416 |
| ● ***ricos*** | Function modules | Page 422 |
| ● ***ricos*** | Analogue I/O- modules | Page 424 |
| ● ***ricos*** | Compact modules | Page 428 |
| ● | General Data | Page 430 |
| ● | Introduction to relay technology | Page 438 |
| ● ***flare*** | Mechanical terminal relay | Page 442 |
| ● ***flare*** MOVE | Plug-in terminal relay | Page 444 |
| ● **WEG** | Single relay in enclosed housing | Page 446 |
| ● **RAB** | Multipole relay modules 24 V | Page 454 |
| ● **WR** | Multipole relay modules 115 V / 230 V | Page 456 |
| ● **WRS** | Wieland relay system | Page 460 |
| ● ***flare*** | Time relay 6,2 mm | Page 462 |
| ● **WRS** | Time relay | Page 463 |
| ● | General data | Page 464 |
| ● | Introduction to solid state relay technology | Page 477 |
| ● ***flare*** | Solid state relay | Page 478 |
| ● **WRS** | Solid state relay | Page 479 |
| ● **M-PB** | Multipole solid stat relay | Page 482 |
| ● | General data | Page 488 |
| ● | Introduction to analog measurement technology | Page 496 |
| ● ***dipos*** | RTD/Pt100 / TC | Page 498 |
| ● | General data | Page 501 |
| ● ***cores*** | Instrument amplifier for RTD/Pt100 | Page 502 |
| ● **AKB** | Analog conversion module | Page 504 |
| ● **AKT** | Analog isolating module | Page 505 |
| ● **UET** | Isolating trip amplifier | Page 506 |
| ● **UET-P** | Isolating trip amplifier, isolated | Page 507 |
| ● **KSQ / *dipos*** KSQ | Constant voltage source | Page 508 |
| ● | General data | Page 510 |
| ● | Introduction to *wipos* switch mode power supply units | Page 516 |
| ● ***wipos*** | Single phase/three phase switched mode | Page 518 |
| ● **WPS** | Power supply 24 V / 0,3–1 A | Page 524 |
| ● **NTU** | Universal power transformer | Page 525 |
| ● **BGL** | Rectifier module | Page 526 |
| ● **FSR** | Fixed voltage regular | Page 528 |
| ● | General data | Page 530 |
| ● | Introduction to *cemos*/thermal overload/system monitoring | Page 536 |
| ● ***cemos*** | Electronic contactors | Page 537 |
| ● **TMS** | Thermistor overload relay | Page 539 |
| ● **LPB / SBS** | Lamp test module/fuse module | Page 540 |
| ● **SSM** | Centralised fault indication | Page 541 |
| ● **DNU / DSU** | Three phase system monitoring / fuse monitoring | Page 542 |
| ● **DRA** | Rotation indicator | Page 543 |
| ● | General data | Page 544 |
| ● | Introduction to SSW interface convertor | Page 552 |
| ● **SSW** | Interface converter | Page 553 |
| ● | General data | Page 555 |
| ● | Introduction to interface modules | Page 559 |
| ● **D-SUB** | D-SUB on screw terminal | Page 560 |
| ● **FLK** | IDC header on screw terminal | Page 561 |
| ● **S5** | Interface modules and I/O plug system for Siemens S5 | Page 562 |
| ● | General data | Page 570 |
| ● | Introduction to empty housing systems | Page 578 |
| ● ***dipos*** | | Page 580 |
| ● **WEB** | | Page 584 |
| ● **WEB 1001/1002** | | Page 588 |
| ● **WEG** | | Page 592 |
| ● **wieBOX** | | Page 594 |
| ● Electronic empty housing | | Page 596 |
| ● | General data | Page 600 |

# Decentralised I/O Modules

ricos

**Introduction to field bus systems**
**Field bus couplers**
**Digital I/O's**
**Function modules**
**Analogue I/O's**
**Compact module**
**General data**

***ricos*** offers

- Field bus couplers for all major field bus systems
- Freely configurable modules for digital/analogue systems
- Modular assembly of field bus nodes
- Spring-clamp terminal for secure and rapid connection
- Economy bus couplers
- Components can be replaced without disconnecting the wiring
- High degree of EMC resistance due to integrated earth connection to the mounting rail
- Compact housing dimensions
- Universal labelling

All Wieland Components which require CE general certification are CE certified, and identified with the CE logo.

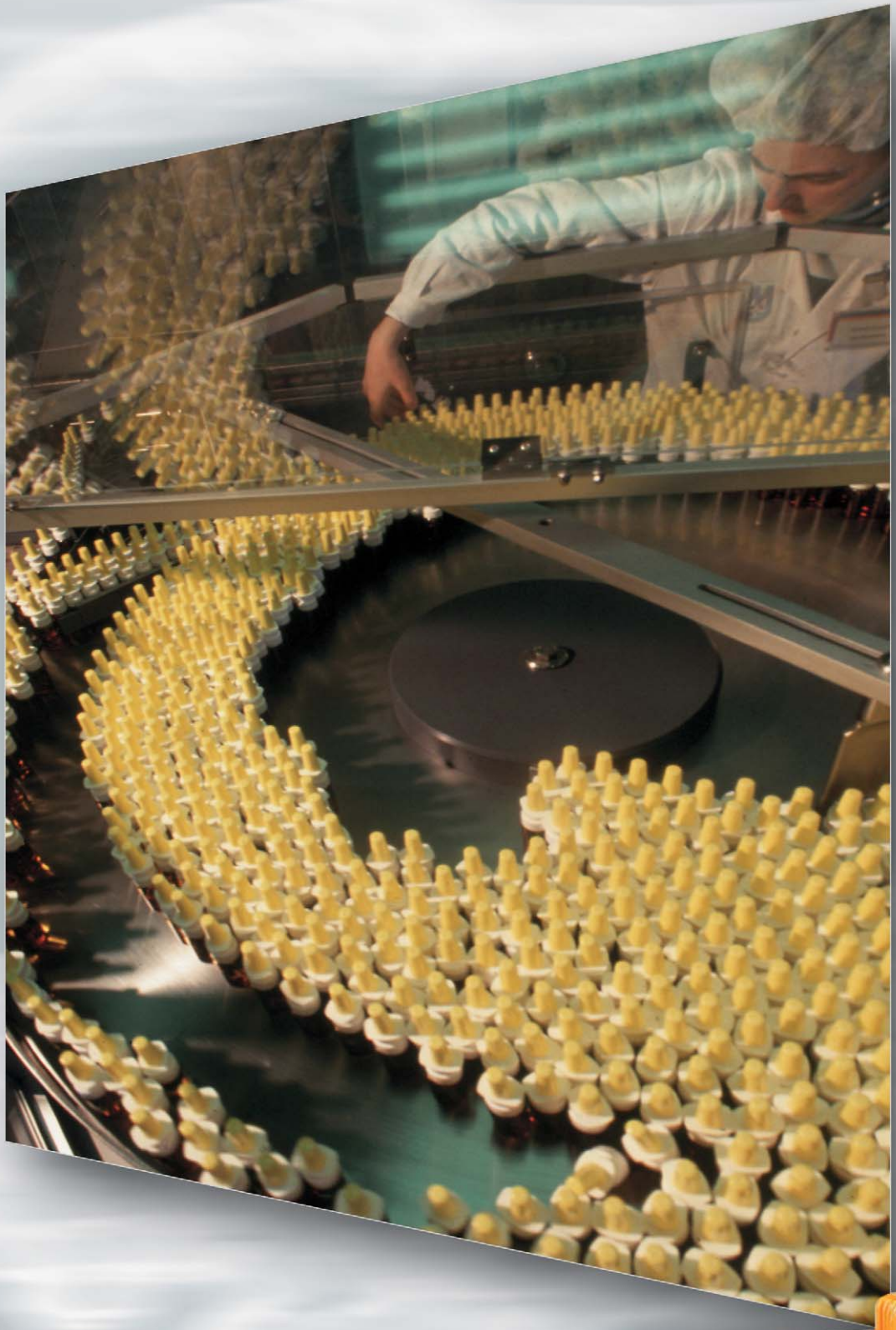

electronics

# Electronic Components

## Decentralised I/O module

# Living with the variety and competition of the fieldbus systems

# ricos

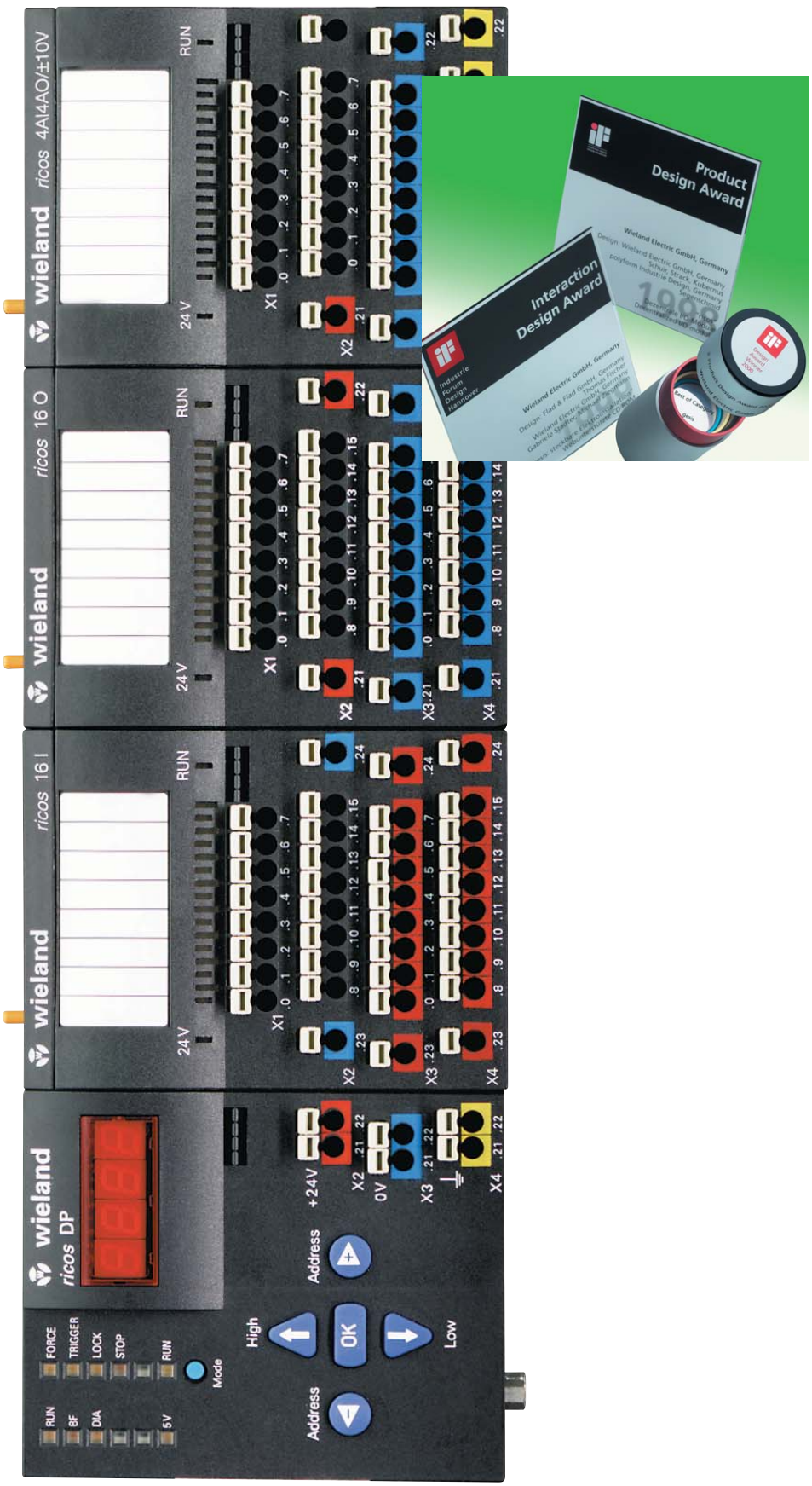


One of the remarkable features of a fieldbus system is its higher performance levels as compared to traditional wiring technology. A key advantage of fieldbus technology is that signal processing is possible in field devices, allowing intelligence to be distributed into the field.

A great number of functional and topological variations are available in today's market. This wide variety of hardware and protocols has formed due to the many different application requirements, company preferences, and the regulatory environment.

Wieland, as a globally active company, meets all fieldbus requirements and – with the ***ricos*** system – offers the user a universal system:

- ❒ Fieldbus couplers for all major fieldbus systems
- ❒ Freely configurable modules for binary and analog signals
- ❒ Modular-type combined fieldbus nodes
- ❒ The diagnosis tools integrated into the buscoupler provide start-up functions such as Force, Trigger and Lock without requiring further software
- ❒ Complete range of functionalities
- ❒ Spring cage clamp terminals for fast and safe connections
- ❒ Economy buscoupler to operate all functionalities
- ❒ Replacing function cards without disconnecting the wires
- ❒ High EMI resistance due to integrated diversion to the mounting rail
- ❒ Compact housing dimensions
- ❒ Consistent marking

# *ricos* in use at Winkler+Dünnebier

Heathrow airport:
***ricos*** insures proper luggage routing

Saving space and costs in paper manufacturing

Getting fit with ***ricos*** – fast and safe

A key feature of the ***ricos*** remote I/O system is its high level of reliability. This reliability level is the result of the quality of the electronic components used in the system, as well as the advanced techniques used during the manufacturing process. It is the combination of this reliability and resulting safety record which has convinced our customers to use the ***ricos*** system.

One such customer, Winkler+Dünnebier, manufactures special machinery for the production of envelopes and hygiene items. The company is the international market leader in these sectors. In paper manufacturing alone their marketshare is approximately two thirds of the global market. When developing their "hygiene" business division W+D were in unknown territory as most manufactures of this type product had traditionally built all of their own machinery. The way they were able to change this custom and gain their international leadership position was through the revolutionary way they built their machines.
W+D decided to produce the machines for their hygiene division using a modular concept. This design allowed for a high degree of flexibility and individual end product options.

During one machine development project, W+D was searching for a distributed connection of actuator and sensor technology via PROFIBUS.
Using this system they wanted to bring their modular concepts to cover not only the mechanical aspects, but also the control technology of their machines.
After comparing all available I/O systems, wieland's ***ricos*** system was chosen for use in the hygienes division.
For a manufacturer of special purpose machines the block design of the ***ricos*** modules is a better fit than the slice design. Since the exact number of inputs and outputs cannot be planned in advance it is necessary to plan on reserve channels. For this reason, ***ricos*** modules were of great interest, as its channels can be used both as inputs and outputs.
The decisive factor for choosing the ***ricos*** system was its clear and easy to use wiring system.

# Technical information on bus systems

ricos

PROFIBUS DP (distributed I/Os), defined in DIN 19 245, part 3, and integrated in the European field bus standard EN 20 170, is a PROFIBUS variant with an optimized transmission rate to serve the needs of the object-oriented system sector and the sensor-actuator sector. It is designed to fit the requirements of the fast, efficient data exchange between the automation devices and the distributed devices such as binary or analog input/output modules and drives in timesensitive applications,

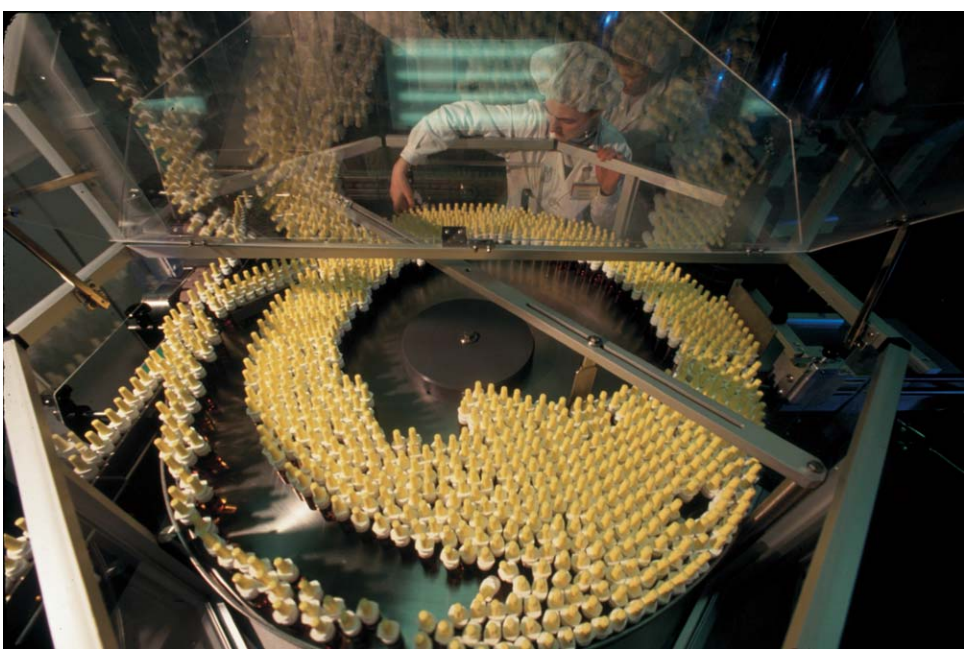

while the layer 7 service is not used. This shift of PROFIBUS DP into the field level enables cost savings in cabling. The field bus PROFIBUS DP is not new, but uses well-proven characteristics of the PROFIBUS transmission technology and the bus access protocol (DIN 19245, part 1 and 2). It is reduced vy certain functions in order to meet the high requirements of the system responsetime in the field of distributed I/O devices.

It is also possible to operate PROFIBUS FMS and PROFIBUS DP in one single cable. And there are especially interesting options when using so-called combination devices which use the characteristics of both variants.

The remarkable features of PROFIBUS DP are:

- ❒ Short response times
- ❒ High immunity
- ❒ Replaces the cost-intensive measured value transmission by a 0(4) to 20mA technology

Data transfer via distributed devices (slaves) is mainly done cyclically in the master-slave procedure. The central control system (master) reads the input information of the slaves and writes the output data to the slaves. PROFIBUS DP V1 also supports, among others the acyclic data interchange PROFIBUS DP operates with a transmission rate of up to 12 Mbits/s and enables the transmission of 1024 bit input/output data distributed among 32 nodes in less than 2 ms.

Characteristics:

- ❒ Line structure (with passive bus coupling)
- ❒ Max. length of 9.6 km in an electrical installation; up to 90 km in an optical one
- ❒ Area-covering networking by subdividing the system in 5 bus segments (via repeater) of up to 1.5 Mbit/s
- ❒ Number of the repeaters used and therefore the transmission distance depending on the baud rate
- ❒ Max. 124 nodes (throughout all bus segments), max. 32 nodes per segment
- ❒ Bus access in the token passing procedure; normal operation only with a master and polling request
- ❒ High transmission rate (real-time capability of PLCs is the major motive for DP)
- ❒ Data transmission via two-wire cable or optical fibre (active bus coupling)
- ❒ Electrical installation with screened, twisted-pair cable and RS485 interface
- ❒ Bit coding in NRZ code (non return to zero)
- ❒ I/O and field devices can be coupled and uncoupled during operation
- ❒ Extensive disgnostic options
- ❒ Open system (DIN E 19 245; EN 50 170)

The INTERBUS system was developed especially for machine system applications and fast processes.

This fieldbus system is therefore mainly used in automated manufacturing on system level, and as object-oriented fieldbus used to connect sensors and actuators. Standard PLC applications and industrial PC applications are possible with a minimum of costs and effort [Phoe97] [BaMü98].

The INTERBUS is set up from point-to-point connections as actively coupled ring. The bus nodes use separate lines each in both directions. This avoids a return from the last to the first node as usually required in ring-connected systems. The forward and return lines are both carried in one cable. This makes the INTERBUS resemble a public service bus in terms of installation, as only one cable is drawn from node to node. A complete bus system is thus implemented with different bus nodes, called interface module, bus coupler, bus network devices and local bus devices.

An interface module (master) operates as central unit for data communication in the bus network. The interface module also connects the INTERBUS system with the higher-level control system. The remote bus network can be set up with max. 512 stations and max. 400 m distance between 2 nodes with a data transmission rate of 500 kbit/s. The RS485 standard is used for data transmission on a two-wire line. The remote bus nodes are all equipped with a separate auxiliary power supply and function as repeaters due to their active couplings, thus enabling long distances. They are furthermore electrically isolated from the advancing INTERBUS segment. Remote bus nodes are both input/output devices and couplers of lower-level sub-rings. There are also mixed versions, the so-called I/O bus couplers.

As INTERBUS does not define any addresses for the nodes in the protocol, the max. number of bus nodes is determined by the master firmware. Implemented firmware allows up to 512 remote bus network nodes. In theory, a distance of 102 km is therefore possible for an INTERBUS system using copper wires. However, a max. system expansion of 13 km is currently guaranteed only. Longer distances can be achieved by using other transfer media such as fiber optic cables which currently allow total expansions of 100 km.

Characteristics:

- ❒ Ring-type structure with active node coupling
- ❒ Bus network with max. 512 nodes, max. distance of 400 m, max. total expansion of 13 km with copper cables, and 100 km with fiber optic cable
- ❒ Local bus with 8 nodes, max. distance of 1.5 m, max. total expansion of 10 m
- ❒ Node addressing according to their order assignment in the ring
- ❒ Transmission rate: Bus network with 500 kbit/s, local bus with 300 kbit/s
- ❒ Bus network using an interface based on RS485 two-wire technology
- ❒ Local bus using CMOS level, and 4 wire pairs for transmission
- ❒ Possible degree of protection up to IP 65
- ❒ High data security; several protection mechanisms (such as CRC)
- ❒ Open system (DIN E 19 258; EN 50 254)

# CAN

In 1983 the automotive industry phrased their demand for a bus system to be used in motor vehicles. An electrical two-wire bus was to replace the extensive cable harnesses used to connect electrical systems. This was absolutely necessary, as the classical cable harnesses in motor vehicles had already reached lengths of more than 2 km and a weight over 100 kg. Requirements came up that could not be met by the bus systems available at that time.

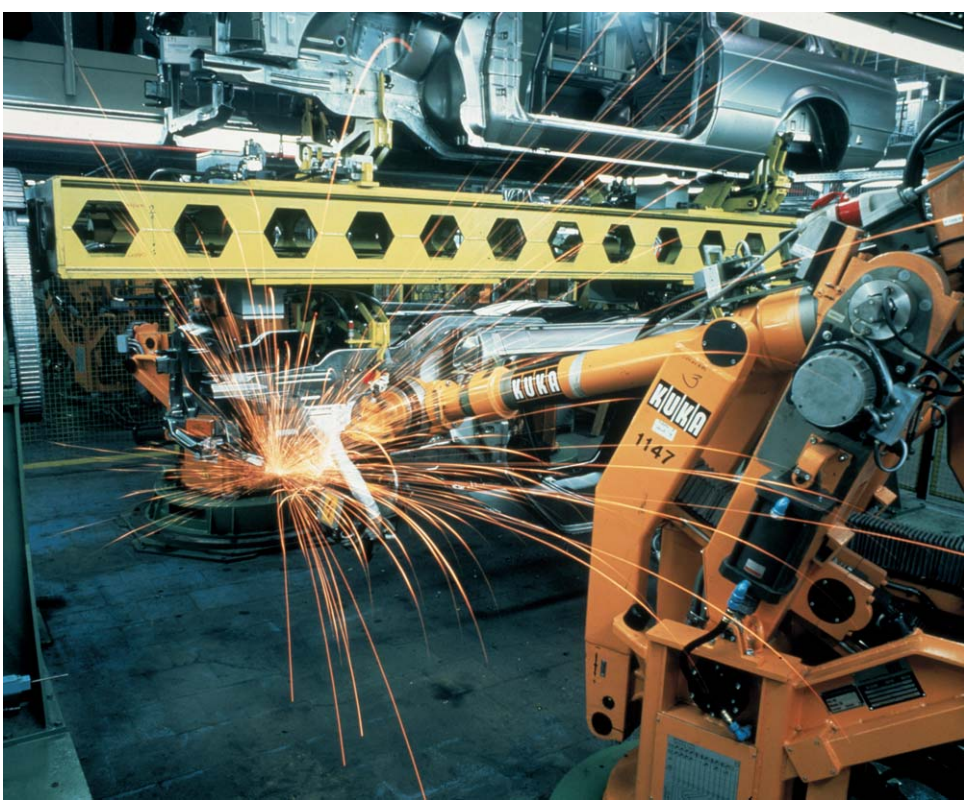


The major requirements:

- ❒ High protection against electromagnetic interference
- ❒ Real-time capability for fast procedures such as ignition and ABS
- ❒ High reliability
- ❒ Favorable price for large batch applications

In 1985 the solution in form of the Controller Area Network (CAN) was presented. CAN was developed in a cooperation between Robert Bosch GmbH and INTEL Semiconductor. In the meantime, CAN has gained a wide field of applications, not only in the motor vehicle technology, but also in the automation technology. Nowadays we find CAN in mobile systems, as machine-internal or system-internal communication system, in production automation, in the bottom field segment of process automation, even in building instrumentation and control, and in many other applications.

Since 1992 the user organization CiA (CAN in automation) has existed. More than 200 manufacturers and users of automation devices, sensors, actuators, software and services are participating in it [Trum95]. CAN is internationally standardized in ISO 11898 and is therefore an open bus system.

The reason for the widespread acceptance of CAN lies not only in the mentioned performance features, but especially also in the availability of very low-cost circuits due to the high quantities guaranteed in the automotive industry [Law2/97]. Characteristics:

- ❒ Line structure (with passive bus coupling)
- ❒ Number of nodes limited by the performance of the driver modules only
- ❒ Expansion depending on the transmission rate 40 m at 1 Mbit/s; 1000 m at 50 kbit/s
- ❒ Twisted-pair cables with terminating resistors and optical fibre
- ❒ Object-oriented messages, broadcasting and multicasting with acceptance check
- ❒ Multi-master network
- ❒ Bus access via bit-by-bit arbitration according to the CSMA/CA procedure; real-time capable for high-priority messages
- ❒ Max. transmission rate of 1 Mbit/s
- ❒ Very high data security (HD = 6); error detection and error signaling; automatic power-off of defect stations (node guarding)
- ❒ Different chips and micro-controllers support the protocol
- ❒ Open system (ISO 11898 and CiA DS 301)

# Preferred areas of application

ricos

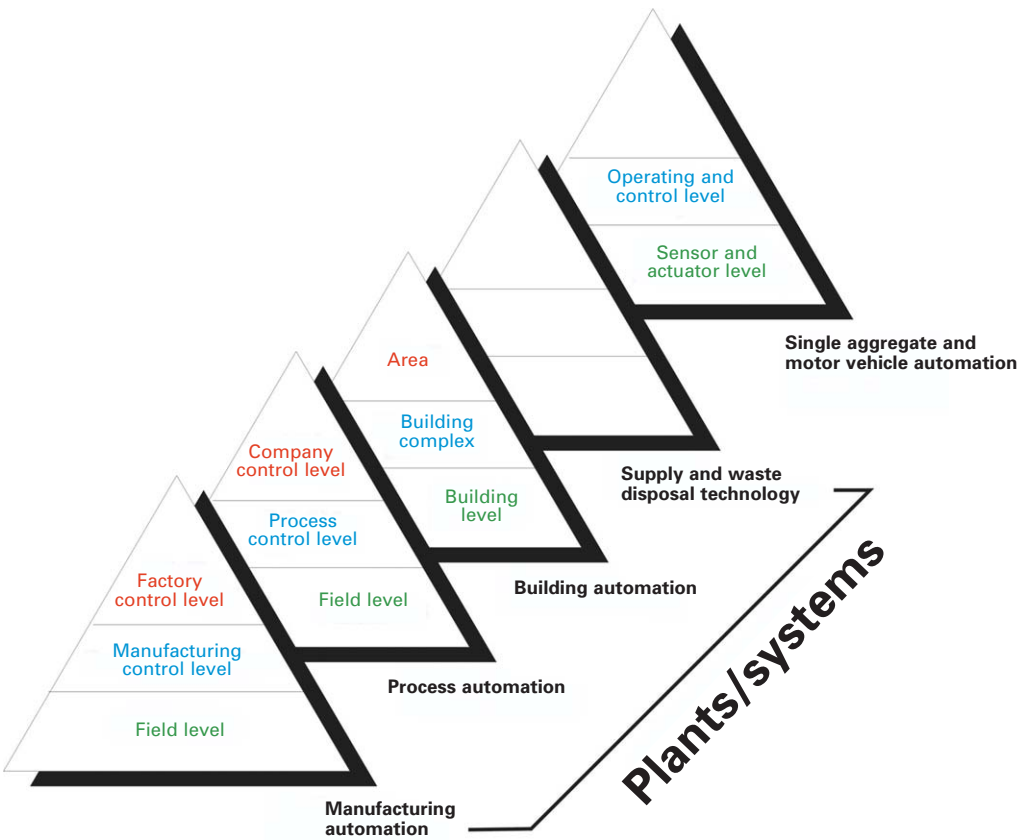


| | Plant – (System) Automation | | | | | Stand-alone automation | |
|---|---|---|---|---|---|---|---|
| Communication levels | Production (solid goods) | Process (gas, fluid, steam...) | Building | Supply and waste disposal | Environment monitoring | Machines devices aggregates | vehicles, means of transport |
| WAN Wide Area Network | high-speed glass fibre (FDDI), Internet (www) | | | | | | |
| LAN Local Area Network | Industry-Ethernet | | | | | | |
| | MMS-Companion Standard: Robot, NC, PLC | MMS-Companion Standard: Process, Control | | | | | |
| FAN (Field bus)– system level | PROFIBUS (FMS) FP INTERBUS MODBUS FF ( IEC NORM) | PROFIBUS (FMS) FP P-NET ARCNET FF (IEC NORM) | PROFIBUS (FMS) LON | PROFIBUS (FMS) DIN MESSBUS | PROFIBUS (FMS) DIN MESSBUS | | |
| Object-oriented system level | PROFIBUS (DP) INTERBUS CAN SERCOS | PROFIBUS (DP) HART (BUS) BITBUS CAN | LON EIB CAN | DIN MESSBUS | DIN MESSBUS | PROFIBUS (DP) INTERBUS SERCOS | CAN P NET |
| Sensor/actuator– system level | AS-INTERFACE INTERBUS-LOOS | HART (PKT/PKT) PROFIBUS PA | EIB M-BUS Ebus | DIN MESSBUS M-BUS | DIN MESSBUS | AS-INTERFACE INTERBUS-LOOS M-BUS Ebus | |

electronics

# Operating and display functions

ricos

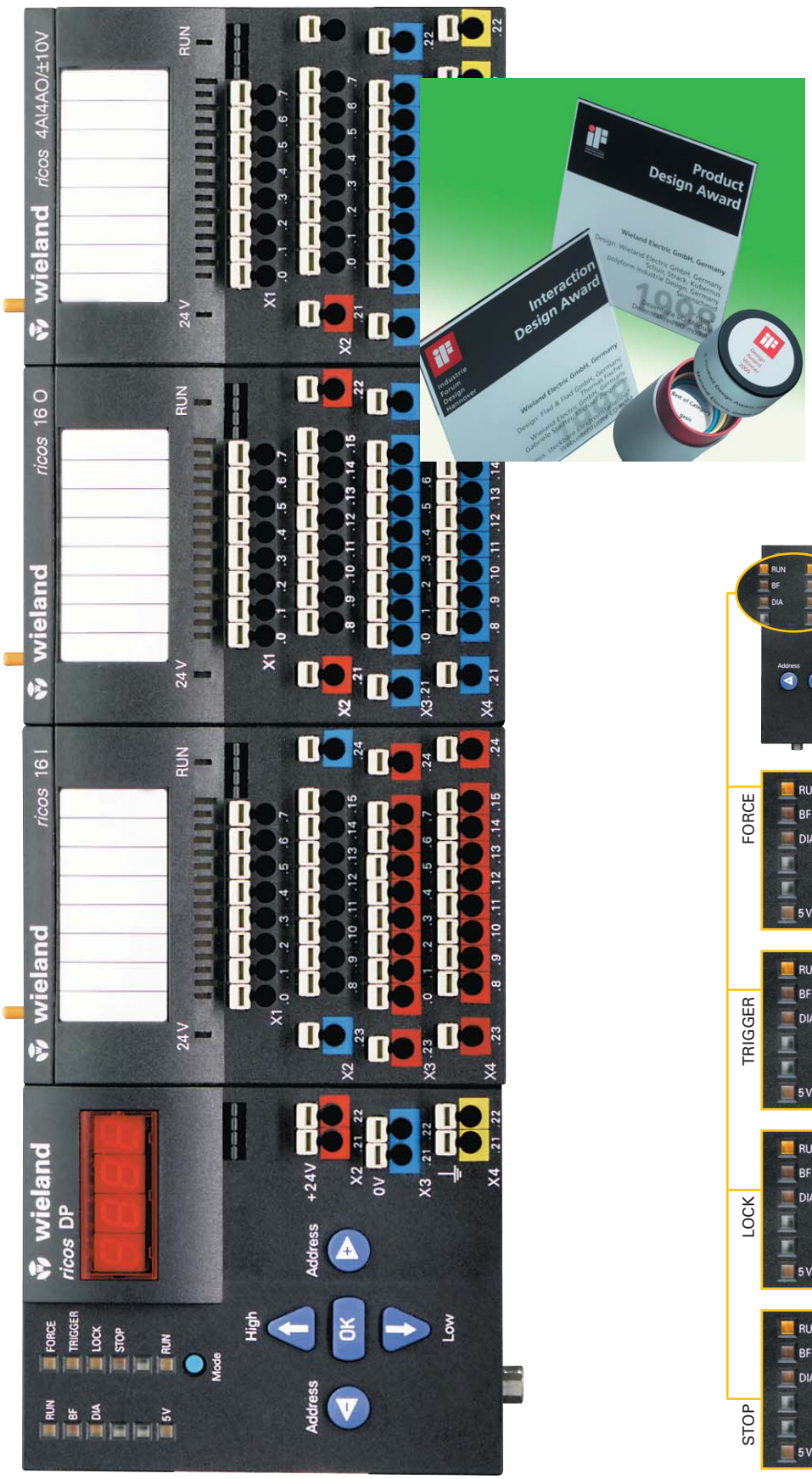


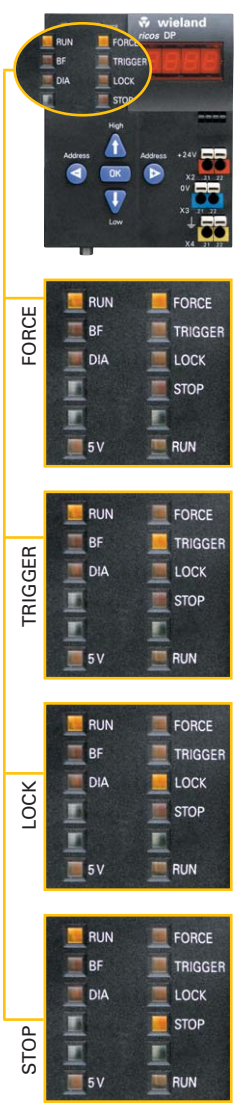


With or without a fieldbus being connected (offline), binary and analog I/O channels can be operated manually.
➜ in the FORCE mode

The last 20 process images of the node can be recorded and displayed
➜ in the TRIGGER mode

Analog and binary I/O channels can be freely chosen and "frozen" to a defined switching status in order to simulate certain elements of the system.
➜ in the LOCK mode

The outputs are switched off and the inputs are faded out.
➜ STOP mode.

# Economy buscoupler compact modules

ricos

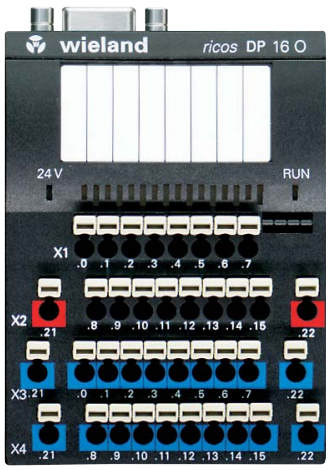


Would you like to ...

- ❒ ...use more than one fieldbus?
- ❒ ...reduce your start-up times?
- ❒ ...simulate signals offline – on site without programming unit?
- ❒ ...set I/Os without PLC?
- ❒ ...read analog values on site?

- ❒ Start-up without field bus connection
- ❒ Troubleshooting on site
- ❒ Displaying signal states of all inputs and outputs for binary and analog values

...then use the ***ricos*** bus coupler with operating and display functionality!

The ***ricos*** buscoupler provides you with:

- ❒ Connection to the most common fieldbus systems such as PROFIBUS DP, Interbus, CANopen and DeviceNet
- ❒ Modules for fast mounting to DIN rails or panel mount
- ❒ Wiring with spring connectors
- ❒ Supplied with open clamping body
- ❒ Module wiring at the front
- ❒ Pluggable potential distributors on the module
- ❒ Compact module dimensions
- ❒ Up to 8 modules can be connected to a bus coupler in line, enabling up to 128 I/O signals per bus node
- ❒ Electronics can be replaced without disconnecting the wiring

If you do not require the operating and display functionality of the standard ***ricos*** buscoupler ...

...then we recommend our ***ricos*** economy buscoupler.

If your control requirements are more complex ...

...then we can offer you our ***ricos*** compact modules.

***ricos*** compact modules

- ❒ 4 compact module types each used for digital signal sensing in the fieldbus systems:
- ❒ PROFIBUS DP
  - ❒ Interbus
  - ❒ CANopen
  - ❒ DeviceNet
- ❒ All modules are slaves with buscoupler functionality
- ❒ Efficient and space-saving extension for only a few I/Os

# Distributed I/O Modules
## Buscoupler

ricos

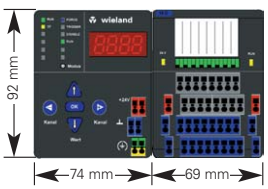


Depth: 51 mm
(incl. mounting rail TS 35/7.5 mm)

Dimensions (mm): W x H x D
74 x 92 x 51

### Modular buscoupler PROFIBUS DP

CE; Approvals: cULus, Profibus certification

### Modular bus coupler Interbus

CE; Approvals: cULus, Interbus certification

| Description | Type | Part no. | Std. pack | Type | Part no. | Std. pack |
|---|---|---|---|---|---|---|
| Buscoupler with diagnosis function | BC DP | 83.030.0000.1 | 1 | BC S | 83.031.0000.1 | 1 |
| | Mode display: | | | Mode display: | | |
| | FORCE mode: LED yellow | | | FORCE mode: LED yellow | | |
| | TRIGGER mode: LED yellow | | | TRIGGER mode: LED yellow | | |
| | LOCK mode: LED yellow | | | LOCK mode: LED yellow | | |
| | STOP mode: LED yellow | | | STOP mode: LED yellow | | |
| | RUN mode: LED green | | | RUN mode: LED green | | |
| **Wiring diagrams, derating curves** | **see page 430** | | | **see page 430** | | |
| **System data** | | | | | | |
| Max. number of nodes | 126 | | | 256 | | |
| Transmission medium | screened copper cable 2 x 0.25 mm²/AWG 23 | | | screened copper cable 5 x 0.25 mm²/AWG 23 | | |
| Max. network expansion | 100 m–1200 m (depending on baud rate/cable) | | | 400 m (remote bus) | | |
| Baud rate | 9.6 kBaud...12 Mbaud | | | 500 kBaud | | |
| Internal bus refresh | 2 ms | | | 2 ms | | |
| Bus connection | 1 x D-SUB 9, screened female connector | | | 2 x D-SUB 9, screened female and male connectors | | |
| **Technical information** | | | | | | |
| Max. number of I/O bytes | 64 E-Byte/64 A-Byte | | | 64 E-Byte/64 A-Byte | | |
| Number of I/O modules per node | 8 | | | 8 | | |
| Number of digital I/O points per node | 128 | | | 128 | | |
| Number of analog I/O points per node | 32 | | | 32 | | |
| Address setting | 3...126 (via keyboard) | | | automatically as per system | | |
| Stet | PC or PLC | | | PC or PLC | | |
| Operating voltage | 24 V DC, ±20 %, max. 5 % residual ripple | | | 24 V DC, ±20 %, max. 5 % residual ripple | | |
| Current input | < 125 mA (at 24 V and without I/O modules) | | | < 125 mA (at 24 V and without I/O modules) | | |
| | < 500 mA (at 24 V with I/O modules) | | | < 500 mA (at 24 V with I/O modules) | | |
| Insulation voltage | 350 V AC, 50 Hz (system / supply) | | | 350 V AC, 50 Hz (system / supply) | | |
| Creepage distances and clearances | DIN EN 61131-2; DIN EN 50178 | | | DIN EN 61131-2; DIN EN 50178 | | |
| Electrostatic discharge | EN 61000-4-2; 8 KV air; 4 KV contact | | | EN 61000-4-2; 8 KV air; 4 KV contact | | |
| Electromagnetic fields | ENV 50140; 10 V/m; 30...1000 MHz | | | ENV 50140; 10 V/m; 30...1000 MHz | | |
| Immunity / emitted interference | EN 61000-6-2/EN 55011, limit value class A, group 1 | | | EN 61000-6-2/EN 55011, limit value class A, group 1 | | |
| Burst | 2 kV accord. to DIN EN 61000-4-4 | | | 2 kV accord. to DIN EN 61000-4-4 | | |
| Connection style | spring connection | | | spring connection | | |
| Cross-sectional area- fine stranded / solid | 26 –14 AWG / 26 –16 AWG | | | 26 –14 AWG / 26 –16 AWG | | |
| Ambient temperature | 0 °C...+55 °C (accord. to DIN 40040) | | | 0 °C...+55 °C (accord. to DIN 40040) | | |
| Storage temperature | –25 °C...+75 °C (accord. to DIN 40040) | | | –25 °C...+75 °C (accord. to DIN 40040) | | |
| Bus-specific status display | RUN | LED green | RUN | RUN | LED green | RUN |
| | bus error | LED red | BF | remote bus disabled | LED red | RD |
| | diagnosis | LED red | DIA | remote bus connected | LED green | RC |
| | operating voltage | LED green | 5 V | bus access | LED green | BA |
| | | | | operating voltage | LED green | 5 V |
| **Accessories** | | | | | | |
| Bus connector, vertical | 83.030.0010.0 (node) | | | 83.031.0010.0 (input line) | | |
| Bus connector, vertical | 83.030.0011.0 (termination) | | | 83.031.0010.0 (output line) | | |
| Bus connector, horizontal (pending) | 83.030.0012.0 (switch) | | | | | |
| Manual, German | 05.591.3389.0 | | | 05.591.3389.0 | | |
| Manual, English | 05.562.1389.0 | | | 05.562.1389.0 | | |
| GSD file and Word template for labels | 05.591.3255.0 | | | 05.591.3255.0 | | |
| Marking tag, 8-digit, unmarked | 04.242.1553.0 | | | 04.242.1553.0 | | |
| Marking tag, 8-digit, marked (upon request) | | | | | | |
| End clamp for DIN rail | Z5.522.8553.0 | | | Z5.522.8553.0 | | |



Specifications are subject to change without notice

# ricos

Dimensions (mm): W x H x D
74 x 92 x 51

## Modular buscoupler DeviceNet

CE; Approvals: cULus

## Modular buscoupler CANopen

CE; Approvals: cULus in preparation

| Description | Type | Part no. | Std. pack | Type | Part no. | Std. pack |
|---|---|---|---|---|---|---|
| Buscoupler with diagnosis function | BC-DEVICENET | 83.032.0000.1 | 1 | BC-CANOPEN | 83.033.0000.1 | 1 |
| Mode display: | incl. 1 busconnector | | | incl. 1 busconnector | | |
| | FORCE mode: LED yellow | | | FORCE mode: LED yellow | | |
| | TRIGGER mode: LED yellow | | | TRIGGER mode: LED yellow | | |
| | LOCK mode: LED yellow | | | LOCK mode: LED yellow | | |
| | STOP mode: LED yellow | | | STOP mode: LED yellow | | |
| | RUN mode: LED green | | | RUN mode: LED green | | |
| **Wiring diagrams, derating curves** | **see page 430** | | | **see page 430** | | |
| **System data** | | | | | | |
| Max. number of nodes | 64 with repeater | | | 256 | | |
| Transmission medium | screened copper cable trunk line AWG 15, 18 | | | screened copper cable 3 x 0.25 mm²/AWG 23 | | |
| | screened copper cable drop line AWG 22, 24 | | | | | |
| Max. network expansion | 100 m–500 m (depending on baud rate / cable) | | | 100 m–500 m (depending on baud rate / cable) | | |
| Baud rate | 125/250/500 kBaud (setting via keyboard) | | | 10 kBaud...1 MBaud (setting via keyboard) | | |
| Internal bus refresh | 2 ms | | | 2 ms | | |
| Bus connection | 5pole connector, screw | | | 5pole connector, screw | | |
| **Technical information** | | | | | | |
| Max. number of I/O bytes | 64 E-Byte/64 A-Byte | | | 9 R-PDOs; 9 T-PDOs | | |
| Number of I/O modules per node | 8 | | | 6 | | |
| Number of digital I/O points per node | 128 | | | 96 | | |
| Number of analog I/O points per node | 32 | | | 24 | | |
| Address setting (MAC ID) | 1...63 (via keyboard) | | | 1...126 (via keyboard) | | |
| Stet | PC or PLC | | | PC or PLC | | |
| Operating voltage | 24 V DC, ±20 %, max. 5 % residual ripple | | | 24 V DC, ±20 %, max. 5 % residual ripple | | |
| Current input | < 125 mA (at 24 V and without I/O modules) | | | < 125 mA (at 24 V and without I/O modules) | | |
| | < 500 mA (at 24 V with I/O modules) | | | < 500 mA (at 24 V with I/O modules) | | |
| Insulation voltage | 350 V AC, 50 Hz (system/supply) | | | 350 V AC, 50 Hz (system / supply) | | |
| Creepage distances and clearances | DIN EN 61131-2; DIN EN 50178 | | | DIN EN 61131-2; DIN EN 50178 | | |
| Electrostatic discharge | EN 61000-4-2; 8 KV air; 4 KV contact | | | EN 61000-4-2; 8 KV air; 4 KV contact | | |
| Electromagnetic fields | ENV 50140; 10 V/m; 30...1000 MHz | | | ENV 50140; 10 V/m; 30...1000 MHz | | |
| Immunity / emitted interference | EN 61000-6-2/EN 55011, limit value class A, group 1 | | | EN 61000-6-2/EN 55011, limit value class A, group 1 | | |
| Burst | 2 kV accord. to DIN EN 61000-4-4 | | | 2 kV accord. to DIN EN 61000-4-4 | | |
| Connection style | spring connection | | | spring connection | | |
| Cross-sectional area-fine stranded / solid | 26 – 14 AWG / 26 – 16 AWG | | | 26 – 14 AWG / 26 – 16 AWG | | |
| Ambient temperature | 0 °C...+55 °C (accord. to DIN 40040) | | | 0 °C...+55 °C (accord. to DIN 40040) | | |
| Storage temperature | –25 °C...+75 °C (accord. to DIN 40040) | | | –25 °C...+75 °C (accord. to DIN 40040) | | |
| Bus-specific status display | RUN | LED green | RUN | RUN | LED green | RUN |
| | status to master | LED green/red | NET | network status | LED green/red | NET |
| | ready for operation | LED green/red | MOD | module status | LED green/red | MOD |
| | operating voltage | LED green | 5 V | operating voltage | LED green | 5 V |
| **Accessories** | | | | | | |
| Bus connector | 25.323.3501.0 | | | 25.323.3501.0 | | |
| Manual, German | 05.591.3389.0 | | | 05.591.3389.0 | | |
| Manual, English | 05.562.1389.0 | | | 05.562.1389.0 | | |
| EDS file and Word template for labels | 05.591.3255.0 | | | 05.591.3255.0 | | |
| Marking tag, 8-digit, unmarked | 04.242.1553.0 | | | 04.242.1553.0 | | |
| Marking tag, 8-digit, marked (upon request) | | | | | | |
| End clamp for DIN rail | Z5.522.8553.0 | | | Z5.522.8553.0 | | |
| | | | | | | |
| | | | | | | |

# Ethernet Buscoupler Module

ricos

## Modular Buscoupler Ethernet TCP/IP

CE; Approvals: CE, $cUL_{us}$ pending

Dimensions (mm): W x H x D 74 x 92 x 51
(incl. mounting rail TS 35; DIN EN 60715)

| Description | Type | Part no. | Std. pack | Type | Part no. | Std. pack |
|---|---|---|---|---|---|---|
| Buscoupler with diagnostic features | BC-Ethernet | 83.034.0000.1 | 1 | | | |
| Mode display: | | | | | | |
| | FORCE mode: LED yellow | | | | | |
| | TRIGGER mode: LED yellow | | | | | |
| | LOCK mode: LED yellow | | | | | |
| | STOP mode: LED yellow | | | | | |
| | RUN mode: LED green | | | | | |
| | | | | | | |
| **System Data** | | | | | | |
| Max. number of nodes | limited by Ethernet specifications | | | | | |
| Transmission medium | CAT5 twisted pair 10/100 base T | | | | | |
| Protocols | MODBUS/TCP. HTTP, Boot-P | | | | | |
| Baud rate | 10/100 Mbit/Autodetection | | | | | |
| Internal Bus Refresh | 2 ms | | | | | |
| Bus connection | RJ 45 | | | | | |
| **Technical Information** | | | | | | |
| Max. number of I/O Bytes | 64 E-Byte/64 A-Byte | | | | | |
| Max. number of I/O modules per node | 8 | | | | | |
| Max. number of digital I/O points per node | 128 | | | | | |
| Max. number of analog I/O points per node | 32 | | | | | |
| Address setting | keypad & Boot P | | | | | |
| Configuration | PC/PLC | | | | | |
| Power Input | 24 V DC ±20%, max 5% residual ripple | | | | | |
| Power Consumption | <3.5 W (without I/O module) | | | | | |
| | | | | | | |
| Isolation voltage | 350 V AC, 50 Hz (system/supply) | | | | | |
| Creepage distances and clearances | DIN EN 61131-2; DIN EN 50178 | | | | | |
| Electrostatic discharge | EN 61000-4-2; 8 KV air; KV contact | | | | | |
| Electromagnetic fields | ENV 50140; 10 V/m; 30 … 1000 MHz | | | | | |
| Immunity/emittedinterference | EN 50082-2/EN 55011, limit value class A, group 1 | | | | | |
| Burst | 2 kV accord. to DIN EN 61000-4-4 | | | | | |
| Connection Style | spring connection | | | | | |
| Cross-section area fine stranded/solid | 0.14 – 1.5 $mm^2$ / 26-14 AWG / 0,5 – 2,5 $mm^2$ / 26-16 AWG | | | | | |
| Ambient temperature | 0° C ... +55° C | | | | | |
| Storage temperature | -25° C ... +70° C | | | | | |
| Bus-specific status display | RUN | LED yellow | RUN | | | |
| | Operating voltage | LED green | TxD/RxD | | | |
| | Net Available | LED green | LINK | | | |
| | Operating voltage | LED yellow | 5 V | | | |
| | Fieldbus not initiated | LED red | INIT | | | |
| **Accessories** | | | | | | |
| Bus connector, vertical | | | | | | |
| Bus connector, vertical | | | | | | |
| Bus connector, horizontal (pending) | | | | | | |
| Manual, German | | 05.591.3389.0 | | | | |
| Manual, English | | 05.562.1389.0 | | | | |
| GSD file and Word template for labels | | 05.591.3255.0 | | | | |
| Marking tag, 8-digit, unmarked | | 04.242.1553.0 | | | | |
| Marking tag, 8-digit, marked (upon request) | | | | | | |
| End Clamp for DIN rail | | Z5.522.8553.0 | | | | |



Specifications are subject to change without notice

ricos

electronics

# Distributed I/O Modules
## Buscoupler

ricos

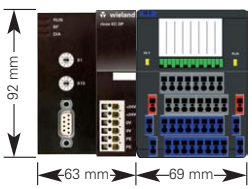


Depth: 51 mm
(incl. mounting rail TS 35/7.5 mm)

Dimensions (mm): W x H x D
63 x 92 x 51

### Modular economy buscoupler PROFIBUS DP

CE; Approvals: cULus, Profibus certification in preparation

### Modular economy buscoupler Interbus

CE; Approvals: cULus, Interbus certification in preparation

| Description | Type | Part no. | Std. pack | Type | Part no. | Std. pack |
|---|---|---|---|---|---|---|
| Economy buscoupler | EC DP | 83.030.0001.1 | 1 | EC S | 83.031.0001.1 | 1 |
| | | | | | | |
| Mode display | RUN – processor operating LED yellow | | | RUN – processor operating LED yellow | | |
| | BF – no bus connected (bus fail): LED red | | | RD - remote bus disabled LED red | | |
| | DIA – diagnosis message sent off: LED red | | | RC - remote bus connected LED green | | |
| | | | | BA – bus access LED green | | |
| | | | | | | |
| **Wiring diagrams, derating curves** | **see page 430** | | | **see page 430** | | |
| **System data** | | | | | | |
| Max. number of nodes | 126 | | | 256 | | |
| Transmission medium | screened copper cable 2 x 0.25 mm²/AWG 23 | | | screened copper cable 5 x 0.25 mm²/AWG 23 | | |
| Max. network expansion | 100 m – 1200 m (depending on baud rate / cable) | | | 400 m (remote bus) | | |
| Baud rate | 9.6 kBaud...12 Mbaud | | | 500 kBaud | | |
| Internal bus refresh | 2 ms | | | 2 ms | | |
| Bus connection | 1 x D-SUB 9, screened female connector | | | 2 x D-SUB 9, screened female and male connectors | | |
| **Technical information** | | | | | | |
| Max. number of I/O bytes | 64 E-Byte/64 A-Byte | | | 64 E-Byte/64 A-Byte | | |
| Number of I/O modules per node | 8 | | | 8 | | |
| Number of digital I/O points per node | 128 | | | 128 | | |
| Number of analog I/O points per node | 32 | | | 32 | | |
| Address setting | 3...126 (switch) | | | automatically as per system | | |
| Stet | PC or PLC | | | PC or PLC | | |
| Operating voltage | 24 V DC, ±20 %, max. 5 % residual ripple | | | 24 V DC, ±20 %, max. 5 % residual ripple | | |
| Current input | < 125 mA (at 24 V and without I/O modules) | | | < 125 mA (at 24 V and without I/O modules) | | |
| | < 500 mA (at 24 V with I/O modules) | | | < 500 mA (at 24 V with I/O modules) | | |
| Insulation voltage | 350 V AC, 50 Hz (system / supply) | | | 350 V AC, 50 Hz (system / supply) | | |
| Creepage distances and clearances | DIN EN 61131-2; DIN EN 50178 | | | DIN EN 61131-2; DIN EN 50178 | | |
| Electrostatic discharge | EN 61000-4-2; 8 KV air; 4 KV contact | | | EN 61000-4-2; 8 KV air; 4 KV contact | | |
| Electromagnetic fields | ENV 50140; 10 V/m; 30...1000 MHz | | | ENV 50140; 10 V/m; 30...1000 MHz | | |
| Immunity / emitted interference | EN 61000-6-2/EN 55011, limit value class A, group 1 | | | EN 61000-6-2/EN 55011, limit value class A, group 1 | | |
| Burst | 2 kV accord. to DIN EN 61000-4-4 | | | 2 kV accord. to DIN EN 61000-4-4 | | |
| Connection style | spring connection | | | spring connection | | |
| Cross-sectional area-fine stranded / solid | 26 – 14 AWG / 26 – 16 AWG | | | 26 – 14 AWG / 26 – 16 AWG | | |
| Ambient temperature | 0 °C...+55 °C (accord. to DIN 40040) | | | 0 °C...+55 °C (accord. to DIN 40040) | | |
| Storage temperature | –25 °C...+75 °C (accord. to DIN 40040) | | | –25 °C...+75 °C (accord. to DIN 40040) | | |
| | | | | | | |
| | | | | | | |
| | | | | | | |
| **Accessories** | | | | | | |
| Bus connector, vertical | 83.030.0010.0 (node) | | | 83.031.0010.0 (input line) | | |
| Bus connector, vertical | 83.030.0011.0 (termination) | | | 83.031.0010.0 (output line) | | |
| Bus connector, horizontal (pending) | 83.030.0012.0 (switch) | | | | | |
| Manual, German | 05.591.3389.0 | | | 05.591.3389.0 | | |
| Manual, English | 05.562.1389.0 | | | 05.562.1389.0 | | |
| GSD file and Word template for labels | 05.591.3255.0 | | | 05.591.3255.0 | | |
| Marking tag, 8-digit, unmarked | 04.242.1553.0 | | | 04.242.1553.0 | | |
| Marking tag, 8-digit, marked (upon request) | | | | | | |
| End clamp for DIN rail | Z5.522.8553.0 | | | Z5.522.8553.0 | | |
| | | | | | | |
| | | | | | | |



Specifications are subject to change without notice

# ricos

Dimensions (mm): W x H x D
63 x 92 x 51

## Modular economy buscoupler DeviceNet

CE; Approvals: cULus in preparation

## Modular economy buscoupler CANopen

CE; Approvals: cULus in preparation

| Description | Type | Part no. | Std. pack | Type | Part no. | Std. pack |
|---|---|---|---|---|---|---|
| Buscoupler with diagnosis function | EC-DEVICENET | 83.032.0001.1 | 1 | EC-CANOPEN | 83.033.0001.1 | 1 |
| | incl. 1 busconnector | | | incl. 1 busconnector | | |
| Mode display: | RUN – processor operating LED yellow | | | RUN – processor operating LED yellow | | |
| | NET - status display to master LED green/red | | | NET - status display to master LED green/red | | |
| | MOD – ready for operation LED green/red | | | MOD – ready for operation LED green/red | | |
| **Wiring diagrams, derating curves** | **see page 430** | | | **see page 430** | | |
| | | | | | | |
| | | | | | | |
| **System data** | | | | | | |
| Max. number of nodes | 64 with repeater | | | 256 | | |
| Transmission medium | screened copper cable trunk line AWG 15, 18 | | | screened copper cable 3 x 0.25 mm²/AWG 23 | | |
| | screened copper cable drop line AWG 22, 24 | | | | | |
| Max. network expansion | 100 m–500 m (depending on baud rate / cable) | | | 100 m–500 m (depending on baud rate / cable) | | |
| Baud rate | 125/250/500 kBaud (DIP switch) | | | 10 kBaud...1 MBaud (DIP switch) | | |
| Internal bus refresh | 2 ms | | | 2 ms | | |
| Bus connection | 5pole connector, screw | | | 5pole connector, screw | | |
| **Technical information** | | | | | | |
| Max. number of I/O bytes | 64 E-Byte/64 A-Byte | | | 9 R-PDOs; 9 T-PDOs | | |
| Number of I/O modules per node | 8 | | | 6 | | |
| Number of digital I/O points per node | 128 | | | 96 | | |
| Number of analog I/O points per node | 32 | | | 24 | | |
| Address setting (MAC ID) | 1...63 (via keyboard) | | | 1...126 (via keyboard) | | |
| Stet | PC or PLC | | | PC or PLC | | |
| Operating voltage | 24 V DC, ±20 %, max. 5 % residual ripple | | | 24 V DC, ±20 %, max. 5 % residual ripple | | |
| Current input | < 125 mA (at 24 V and without I/O modules) | | | < 125 mA (at 24 V and without I/O modules) | | |
| | < 500 mA (at 24 V with I/O modules) | | | < 500 mA (at 24 V with I/O modules) | | |
| Insulation voltage | 350 V AC, 50 Hz (system / supply) | | | 350 V AC, 50 Hz (system / supply) | | |
| Creepage distances and clearances | DIN EN 61131-2; DIN EN 50178 | | | DIN EN 61131-2; DIN EN 50178 | | |
| Electrostatic discharge | EN 61000-4-2; 8 KV air; 4 KV contact | | | EN 61000-4-2; 8 KV air; 4 KV contact | | |
| Electromagnetic fields | ENV 50140; 10 V/m; 30...1000 MHz | | | ENV 50140; 10 V/m; 30...1000 MHz | | |
| Immunity / emitted interference | EN 61000-6-2/EN 55011, limit value class A, group 1 | | | EN 61000-6-2/EN 55011, limit value class A, group 1 | | |
| Burst | 2 kV accord. to DIN EN 61000-4-4 | | | 2 kV accord. to DIN EN 61000-4-4 | | |
| Connection style | spring connection | | | spring connection | | |
| Cross-sectional area-fine stranded / solid | 26 – 14 AWG / 26 – 16 AWG | | | 26 – 14 AWG / 26 – 16 AWG | | |
| Ambient temperature | 0 °C...+55 °C (accord. to DIN 40040) | | | 0 °C...+55 °C (accord. to DIN 40040) | | |
| Storage temperature | –25 °C...+75 °C (accord. to DIN 40040) | | | –25 °C...+75 °C (accord. to DIN 40040) | | |
| | | | | | | |
| | | | | | | |
| **Accessories** | | | | | | |
| Bus connector | 25.323.3501.0 | | | 25.323.3501.0 | | |
| Manual, German | 05.591.3389.0 | | | 05.591.3389.0 | | |
| Manual, English | 05.562.1389.0 | | | 05.562.1389.0 | | |
| EDS file and Word template for labels | 05.591.3255.0 | | | 05.591.3255.0 | | |
| Marking tag, 8-digit, unmarked | 04.242.1553.0 | | | 04.242.1553.0 | | |
| Marking tag, 8-digit, marked (upon request) | | | | | | |
| End clamp for DIN rail | Z5.522.8553.0 | | | Z5.522.8553.0 | | |
| | | | | | | |
| | | | | | | |
| | | | | | | |
| | | | | | | |

# Distributed I/O Modules

ricos

## Binary I/O modules

**Configurable as input or output,**
**for 2-wire, 3-wire and 4-wire connections**
**Electronic components can be replaced**
**without disconnecting the wiring**

Dimensions (mm): W x H x D
69 x 92 x 51

### Binary I/O module 24 V DC 8 inputs or 8 outputs

CE; Approvals: c UL us

### Binary I/O module 24 V DC 16 inputs

CE; Approvals: c UL us

| Description | Type | Part no. | Std. pack | Type | Part no. | Std. pack |
|---|---|---|---|---|---|---|
| | ricos 8I/O | 83.035.3100.1 | 1 | ricos 16I | 83.035.3000.1 | 1 |
| Mode display: | | | | | | |
| | 24 V – supply voltage connected: LED yellow | | | 24 V – supply voltage connected: LED yellow | | |
| | RUN – internal data transmission in progress: LED yellow | | | RUN – internal data transmission in progress: LED yellow | | |
| | channel LED – switching status: LED green | | | channel LED – switching status: LED green | | |
| | channel LED – channel cursor: LED yellow | | | channel LED – channel cursor: LED yellow | | |
| **Wiring diagrams, derating curves** | **see pages 431 – 434** | | | **see pages 431 – 434** | | |
| **Module data** | | | | | | |
| Number of inputs | max. 8 | | | 16 | | |
| Number of outputs | max. 8 | | | 0 | | |
| Operating voltage | 24 V DC, ±20 %, max. 5 % residual ripple | | | 24 V DC, ±20 %, max. 5 % residual ripple | | |
| Power input | < 0.5 W | | | < 0.5 W | | |
| Stet | not required | | | not required | | |
| Required space on control side | 1 input byte/1output byte | | | 2 input byte | | |
| **Input data** | | | | | | |
| Switching level "0" (EN 61131-2) | –30 V...+5 V DC | | | –30 V...+5 V DC | | |
| Switching level "1" (EN 61131-2) | +15 V...+30 V DC | | | +15 V...+30 V DC | | |
| Input current/channel (at 24 V DC) | 6.1 mA | | | 4.5 mA | | |
| Status display | LED green | | | LED green | | |
| **Output data** | | | | | | |
| Output voltage | operating voltage – 0.5 V DC | | | | | |
| Output current per channel | 1000 mA DC | | | | | |
| Max. total current per module | 8 A DC | | | | | |
| Simultaneity | 100 % | | | | | |
| Load types | resistive, inductive | | | | | |
| Status display | LED green | | | | | |
| Output response | resistant to overload and short-circuit | | | | | |
| **General** | | | | | | |
| Signal delay per I/O channel | < 100 µs | | | < 100 µs | | |
| Max. voltage power contacts | 30 V DC | | | 30 V DC | | |
| Max. current power contacts | 8 A DC | | | 8 A DC | | |
| Insulation voltage | 350 V AC, 50 Hz (system/supply) | | | 350 V AC, 50 Hz (system/supply) | | |
| Creepage distances and clearances | DIN EN 61131-2; DIN EN 50178 | | | DIN EN 61131-2; DIN EN 50178 | | |
| Electrostatic discharge | EN 61000-4-2; 8 KV air; 4 KV contact | | | EN 61000-4-2; 8 KV air; 4 KV contact | | |
| Electromagnetic fields | ENV 50140; 10 V/m; 30...1000 MHz | | | ENV 50140; 10 V/m; 30...1000 MHz | | |
| Immunity / emitted interference | EN 61000-6-2/EN 55011, limit value class A, group 1 | | | EN 61000-6-2/EN 55011, limit value class A, group 1 | | |
| Burst | accord. to EN 61000-4-4 | | | accord. to EN 61000-4-4 | | |
| Connection style | spring connection | | | spring connection | | |
| Cross-sectional area-fine stranded / solid | 26 – 14 AWG / 26 – 16 AWG | | | 26 – 14 AWG / 26 – 16 AWG | | |
| Ambient temperature | 0 °C...+55 °C (accord. to DIN 40040) | | | 0 °C...+55 °C (accord. to DIN 40040) | | |
| Storage temperature | –25 °C...+75 °C (accord. to DIN 40040) | | | –25 °C...+75 °C (accord. to DIN 40040) | | |
| **Accessories** | | | | | | |
| Snap-on potential distributor for 3-wire and 4-wire operation | 83.039.0000.1 | | | 83.039.0000.1 | | |
| Adhesive labels, DIN A4 sheet | 05.591.3255.0 | | | 05.591.3255.0 | | |
| 2pole jumper for parallel output switching | Z7.258.1225.0 | | | Z7.258.1225.0 | | |
| Marking tag, 8-digit, unmarked | 04.242.1553.0 | | | 04.242.1553.0 | | |
| Marking tag, 8-digit, marked (upon request) | | | | | | |
| End clamp for DIN rail | Z5.522.8553.0 | | | Z5.522.8553.0 | | |
| Manual, English | 05.562.1389.0 | | | 05.562.1389.0 | | |
| | | | | | | |



Specifications are subject to change without notice

# ricos

Dimensions (mm): W x H x D
69 x 92 x 51

## Binary I/O module 115 V AC 4 inputs

CE; Approvals: cULus in preparation

## Binary I/O module 230 V AC 4 inputs

CE; Approvals: cULus in preparation

| Description | Type | Part no. | Std. pack | Type | Part no. | Std. pack |
|---|---|---|---|---|---|---|
| | ricos 4I 115 V | 83.035.5000.1 | 1 | ricos 4I 230 V | 83.035.5005.1 | 1 |
| Mode display: | | | | | | |
| | 24 V – supply voltage connected: LED yellow | | | 24 V – supply voltage connected: LED yellow | | |
| | RUN – internal data transmission in progress: LED yellow | | | RUN – internal data transmission in progress: LED yellow | | |
| | channel LED – switching status: LED green | | | Channel LED – switching status: LED green | | |
| | channel LED – channel cursor: LED yellow | | | Channel LED – channel cursor: LED yellow | | |
| **Wiring diagrams, derating curves** | **see pages 431 – 434** | | | **see pages 431 – 434** | | |
| **Module data** | | | | | | |
| Number of inputs | 4 | | | 4 | | |
| Number of outputs | 0 | | | 0 | | |
| Operating voltage | 115 V AC, ± 10 % | | | 230 V AC, ± 10 % | | |
| Power input | < 0.5 W | | | < 0.5 W | | |
| Stet | not required | | | not required | | |
| Required space on control side | 1 input byte | | | 1 input byte | | |
| **Input data** | | | | | | |
| Switching level "0" (EN 61131-2) | 0 V...20 V AC | | | 0 V...40 V AC | | |
| Switching level "1" (EN 61131-2) | 79 V...130 V AC | | | 164 V...250 V AC | | |
| Input current / channel (at 24 V DC) | typically 5 mA | | | typically 5 mA | | |
| Status display | LED green | | | LED green | | |
| **Output data:** | | | | | | |
| Output voltage | | | | | | |
| Output current per channel | | | | | | |
| Max. total current per module | | | | | | |
| Simultaneity | | | | | | |
| Load types | | | | | | |
| Status display | | | | | | |
| Output response | | | | | | |
| **General** | | | | | | |
| Signal delay per I/O channel | max. 10 ms | | | max. 10 ms | | |
| Max. voltage power contacts | 250 V AC | | | 250 V AC | | |
| Max. current power contacts | 8 A AC | | | 8 A AC | | |
| Insulation voltage | 350 V AC, 50 Hz (system / supply) | | | 350 V AC, 50 Hz (system / supply) | | |
| Creepage distances and clearances | DIN EN 61131-2; DIN EN 50178 | | | DIN EN 61131-2; DIN EN 50178 | | |
| Electrostatic discharge | EN 61000-4-2; 8 KV air; 4 KV contact | | | EN 61000-4-2; 8 KV air; 4 KV contact | | |
| Electromagnetic fields | ENV 50140; 10 V/m; 30...1000 MHz | | | ENV 50140; 10 V/m; 30...1000 MHz | | |
| Immunity / emitted interference | EN 61000-6-2/EN 55011, limit value class A, group 1 | | | EN 61000-6-2/EN 55011, limit value class A, group 1 | | |
| Burst | accord. to EN 61000-4-4 | | | accord. to EN 61000-4-4 | | |
| Connection style | spring connection | | | spring connection | | |
| Cross-sectional area-fine stranded / solid | 26 – 14 AWG / 26 – 16 AWG | | | 26 – 14 AWG / 26 – 16 AWG | | |
| Ambient temperature | 0 °C...+ 55 °C (accord. to DIN 40040) | | | 0 °C...+ 55 °C (accord. to DIN 40040) | | |
| Storage temperature | –25 °C...+ 75 °C (accord. to DIN 40040) | | | –25 °C...+ 75 °C (accord. to DIN 40040) | | |
| **Accessories** | | | | | | |
| Snap-on potential distributor for 3-wire and 4-wire operation | 83.039.0000.1 | | | 83.039.0000.1 | | |
| Adhesive labels, DIN A4 sheet | 05.591.3255.0 | | | 05.591.3255.0 | | |
| 2pole jumper for parallel output switching | Z7.258.1225.0 | | | Z7.258.1225.0 | | |
| Marking tag, 8-digit, unmarked | 04.242.1553.0 | | | 04.242.1553.0 | | |
| Marking tag, 8-digit, marked (upon request) | | | | | | |
| End clamp for DIN rail | Z5.522.8553.0 | | | Z5.522.8553.0 | | |
| Manual, English | 05.562.1389.0 | | | 05.562.1389.0 | | |
| | | | | | | |

# Distributed I/O Modules

ricos

## Binary I/O modules

**for 2-wire, 3-wire and 4-wire connections**
**Electronic components can be replaced without disconnecting the wiring**

Dimensions (mm): W x H x D
69 x 92 x 51

### Binary I/O module, 4 relay outputs

CE; Approvals: cULus in preparation

| Description | Type | Part no. | Std. pack | |
|---|---|---|---|---|
| | ricos 4O RELAY | 83.035.5200.1 | 1 | |
| Mode display: | | | | |
| | 24 V – supply voltage connected: LED yellow | | | |
| | RUN – internal data transmission in progress: LED yellow | | | |
| | channel LED – switching status: LED green | | | |
| | channel LED – channel cursor: LED yellow | | | |
| **Wiring diagrams, derating curves** | **see pages 431 – 434** | | | |
| **Module data** | | | | |
| Number of inputs | 0 | | | |
| Number of outputs | 4 | | | |
| Operating voltage | 24 V DC, ±20 %, max. 5 % residual ripple | | | |
| Power input | < 1 W | | | |
| Stet | not required | | | |
| Required space on control side | 1 output byte | | | |
| **Input data** | | | | |
| Switching level "0" (EN 61131-2) | | | | |
| Switching level "1" (EN 61131-2) | | | | |
| Input current/channel (at 24 V DC) | | | | |
| Status display | | | | |
| **Output data:** | | | | |
| Output voltage | 250 V AC, 30 V DC | | | |
| Output current per channel | 5 A AC/DC | | | |
| Max. total current per module | 12 A AC/DC | | | |
| Simultaneity | 100 % | | | |
| Load types | resistive / inductive | | | |
| Status display | LED green | | | |
| Output response | | | | |
| **General** | | | | |
| Signal delay per I/O channel | < 10 ms | | | |
| Max. voltage power contacts | 250 V AC/DC | | | |
| Max. current power contacts | 8 A AC/DC | | | |
| Insulation voltage | 350 V AC, 50 Hz (system / supply) | | | |
| Creepage distances and clearances | DIN EN 61131-2; DIN EN 50178 | | | |
| Electrostatic discharge | EN 61000-4-2; 8 KV air; 4 KV contact | | | |
| Electromagnetic fields | ENV 50140; 10 V/m; 30...1000 MHz | | | |
| Immunity / emitted interference | EN 61000-6-2/EN 55011, limit value class A, group 1 | | | |
| Burst | accord. to EN 61000-4-4 | | | |
| Connection style | spring connection | | | |
| Cross-sectional area-fine stranded / solid | 26 – 14 AWG / 26 – 16 AWG | | | |
| Ambient temperature | 0 °C...+55 °C (accord. to DIN 40040) | | | |
| Storage temperature | –25 °C...+75 °C (accord. to DIN 40040) | | | |
| **Accessories** | | | | |
| Snap-on potential distributor for 3-wire and 4-wire operation | 83.039.0000.1 | | | |
| Adhesive labels, DIN A4 sheet | 05.591.3255.0 | | | |
| 2pole jumper for parallel output switching | Z7.258.1225.0 | | | |
| Marking tag, 8-digit, unmarked | 04.242.1553.0 | | | |
| Marking tag, 8-digit, marked (upon request) | | | | |
| End clamp for DIN rail | Z5.522.8553.0 | | | |
| Manual, English | 05.562.1389.0 | | | |
| | | | | |



Specifications are subject to change without notice

# ricos

## Binary I/O modules

**Configurable as input or output,**
**for 2-wire, 3-wire and 4-wire connections**
**Electronic components can be replaced**
**without disconnecting the wiring**

Dimensions (mm): W x H x D
69 x 92 x 51

**Binary module 16 outputs**
CE; Approvals: c UL us

**Binary I/O module 8 inputs and 8 inputs/outputs**
CE; Approvals: c UL us

| **Description** | Type | Part no. | Std. pack | Type | Part no. | Std. pack |
|---|---|---|---|---|---|---|
| | ricos 16O | 83.035.3200.1 | 1 | ricos 8I 8I/O | 83.035.3300.1 | 1 |
| Mode display: | | | | | | |
| | 24 V – supply voltage connected: LED yellow | | | 24 V – supply voltage connected: LED yellow | | |
| | RUN – internal data transmission in progress: LED yellow | | | RUN – internal data transmission in progress: LED yellow | | |
| | channel LED – switching status: LED green | | | channel LED – switching status: LED green | | |
| | channel LED – channel cursor: LED yellow | | | channel LED – channel cursor: LED yellow | | |
| **Wiring diagrams, derating curves** | **see pages 431 – 434** | | | **see pages 431 – 434** | | |
| **Module data** | | | | | | |
| Number of inputs | 0 | | | 8 + max. 8 | | |
| Number of outputs | 16 | | | max. 8 | | |
| Operating voltage | 24 V DC, ±20 %, max. 5 % residual ripple | | | 24 V DC, ±20 %, max. 5 % residual ripple | | |
| Power input | < 0.5 W | | | < 0.5 W | | |
| Stet | not required | | | not required | | |
| Required space on control side | 2 output byte | | | 2 input byte and 1output byte | | |
| **Input data** | | | | | | |
| Switching level "0" (EN 61131-2) | | | | –30 V...+5 V DC | | |
| Switching level "1" (EN 61131-2) | | | | +15 V...+30 V DC | | |
| Input current / channel (at 24 V DC) | | | | 4.5 mA/6.5 mA (combin. I/O) | | |
| Status display | | | | LED green | | |
| **Output data:** | | | | | | |
| Output voltage | operating voltage – 0.5 V DC | | | operating voltage –0.5 V DC | | |
| Output current per channel | 1000 mA DC | | | 1000 mA DC | | |
| Max. total current per module | 8 A DC | | | 8 A DC | | |
| Simultaneity | 50 % | | | 100 % | | |
| Load types | resistive, inductive | | | resistive, inductive | | |
| Status display | LED green | | | LED green | | |
| Output response | resistant to overload and short-circuit | | | resistant to overload and short-circuit | | |
| **General** | | | | | | |
| Signal delay per I/O channel | < 100 µs | | | < 100 µs | | |
| Max. voltage power contacts | 30 V DC | | | 30 V DC | | |
| Max. current power contacts | 8 A DC | | | 8 A DC | | |
| Insulation voltage | 350 V AC, 50 Hz (system / supply) | | | 350 V AC, 50 Hz (system / supply) | | |
| Creepage distances and clearances | DIN EN 61131-2; DIN EN 50178 | | | DIN EN 61131-2; DIN EN 50178 | | |
| Electrostatic discharge | EN 61000-4-2; 8 KV air; 4 KV contact | | | EN 61000-4-2; 8 KV air; 4 KV contact | | |
| Electromagnetic fields | ENV 50140; 10 V/m; 30...1000 MHz | | | ENV 50140; 10 V/m; 30...1000 MHz | | |
| Immunity / emitted interference | EN 61000-6-2/EN 55011, limit value class A, group 1 | | | EN 61000-6-2/EN 55011, limit value class A, group 1 | | |
| Burst | accord. to EN 61000-4-4 | | | accord. to EN 61000-4-4 | | |
| Connection style | spring connection | | | spring connection | | |
| Cross-sectional area-fine stranded / solid | 26 – 14 AWG / 26 – 16 AWG | | | 26 – 14 AWG / 26 – 16 AWG | | |
| Ambient temperature | 0 °C...+55 °C (accord. to DIN 40040) | | | 0 °C...+55 °C (accord. to DIN 40040) | | |
| Storage temperature | –25 °C...+75 °C (accord. to DIN 40040) | | | –25 °C...+75 °C (accord. to DIN 40040) | | |
| **Accessories** | | | | | | |
| Snap-on potential distributor for 3-wire and 4-wire operation | 83.039.0000.1 | | | 83.039.0000.1 | | |
| Adhesive labels, DIN A4 sheet | 05.591.3255.0 | | | 05.591.3255.0 | | |
| 2pole jumper for parallel output switching | Z7.258.1225.0 | | | Z7.258.1225.0 | | |
| Marking tag, 8-digit, unmarked | 04.242.1553.0 | | | 04.242.1553.0 | | |
| Marking tag, 8-digit, marked (upon request) | | | | | | |
| End clamp for DIN rail | Z5.522.8553.0 | | | Z5.522.8553.0 | | |
| Manual, English | 05.562.1389.0 | | | 05.562.1389.0 | | |
| | | | | | | |

# Distributed I/O Modules

ricos

## Binary I/O modules

**for 2-wire, 3-wire and 4-wire connections**
**Electronic components can be replaced without disconnecting the wiring**

Dimensions (mm): W x H x D
69 x 92 x 51

### Binary I/O module 24 V DC 4 outputs 2 A DC

CE; Approvals: cULus in preparation

### Binary I/O module 24 V DC 8 outputs, negative switching

CE; Approvals: cULus in preparation

| Description | Type | Part no. | Std. pack | Type | Part no. | Std. pack |
|---|---|---|---|---|---|---|
| | ricos 4O DC 2A | 83.035.3005.1 | 1 | ricos 8O NEG | 83.035.3210.1 | 1 |
| Mode display: | | | | | | |
| | 24 V – supply voltage connected: LED yellow | | | 24 V – supply voltage connected: LED yellow | | |
| | RUN – internal data transmission in progress: LED yellow | | | RUN – internal data transmission in progress: LED yellow | | |
| | channel LED – switching status: LED green | | | channel LED – switching status: LED green | | |
| | channel LED – channel cursor: LED yellow | | | channel LED – channel cursor: LED yellow | | |
| **Wiring diagrams, derating curves** | **see pages 431 – 434** | | | **see pages 431 – 434** | | |
| **Module data** | | | | | | |
| Number of inputs | 0 | | | 0 | | |
| Number of outputs | 4 | | | 8 | | |
| Operating voltage | 24 V DC, ±20 %, max. 5 % residual ripple | | | 24 V DC, ±20 %, max. 5 % residual ripple | | |
| Power input | < 0.5 W | | | < 0.5 W | | |
| Stet | not required | | | not required | | |
| Required space on control side | 1 output byte | | | 1 output byte | | |
| **Input data** | | | | | | |
| Switching level "0" (EN 61131-2) | | | | | | |
| Switching level "1" (EN 61131-2) | | | | | | |
| Input current / channel (at 24 V DC) | | | | | | |
| Status display | | | | | | |
| **Output data** | | | | | | |
| Output voltage | operating voltage –0.5 V DC | | | operating voltage –0.5 V DC | | |
| Output current per channel | 2 A DC | | | 1000 mA DC | | |
| Max. total current per module | 8 A DC | | | 8 A DC | | |
| Simultaneity | 100 % | | | 100% | | |
| Load types | resistive, inductive | | | resistive, inductive | | |
| Status display | LED green | | | LED green | | |
| Output response | resistant to overload and short-circuit | | | resistant to overload and short-circuit | | |
| **General** | | | | | | |
| Signal delay per I/O channel | < 100 µs | | | < 100 µs | | |
| Max. voltage power contacts | 30 V DC | | | 30 V DC | | |
| Max. current power contacts | 8 A DC | | | 8 A DC | | |
| Insulation voltage | 350 V AC, 50 Hz (system / supply) | | | 350 V AC, 50 Hz (system / supply) | | |
| Creepage distances and clearances | DIN EN 61131-2; DIN EN 50178 | | | DIN EN 61131-2; DIN EN 50178 | | |
| Electrostatic discharge | EN 61000-4-2; 8 KV air; 4 KV contact | | | EN 61000-4-2; 8 KV air; 4 KV contact | | |
| Electromagnetic fields | ENV 50140; 10 V/m; 30...1000 MHz | | | ENV 50140; 10 V/m; 30...1000 MHz | | |
| Immunity / emitted interference | EN 61000-6-2/EN 55011, limit value class A, group 1 | | | EN 61000-6-2/EN 55011, limit value class A, group 1 | | |
| Burst | accord. to EN 61000-4-4 | | | accord. to EN 61000-4-4 | | |
| Connection style | spring connection | | | spring connection | | |
| Cross-sectional area-fine stranded / solid | 26 – 14 AWG / 26 – 16 AWG | | | 26 – 14 AWG / 26 – 16 AWG | | |
| Ambient temperature | 0 °C...+55 °C (accord. to DIN 40040) | | | 0 °C...+55 °C (accord. to DIN 40040) | | |
| Storage temperature | –25 °C...+75 °C (accord. to DIN 40040) | | | –25 °C...+75 °C (accord. to DIN 40040) | | |
| **Accessories** | | | | | | |
| Snap-on potential distributor for 3-wire and 4-wire operation | 83.039.0000.1 | | | 83.039.0000.1 | | |
| Adhesive labels, DIN A4 sheet | 05.591.3255.0 | | | 05.591.3255.0 | | |
| 2pole jumper for parallel output switching | Z7.258.1225.0 | | | Z7.258.1225.0 | | |
| Marking tag, 8-digit, unmarked | 04.242.1553.0 | | | 04.242.1553.0 | | |
| Marking tag, 8-digit, marked (upon request) | | | | | | |
| End clamp for DIN rail | Z5.522.8553.0 | | | Z5.522.8553.0 | | |
| Manual, English | 05.562.1389.0 | | | 05.562.1389.0 | | |
| | | | | | | |



Specifications are subject to change without notice

# Distributed I/O Modules

ricos

## Counter/positioning modules

**2 or 4 counters per module**
**up to 2 threshold values can be set**

**Positioning module for 2 axes**
**Electronic components can be replaced without disconnecting the wiring**

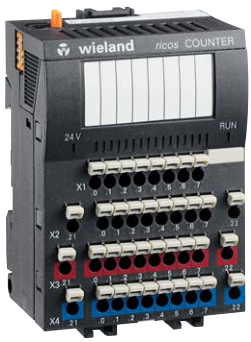

Dimensions (mm): W x H x D
69 x 92 x 51

**Binary I/O module**
**2–32 bit / 4–16 bit counter**
CE; Approvals: cULus in preparation

**Binary I/O module,**
**positioning module**
CE; Approvals: cULus in preparation

| **Description** | Type | Part no. | Std. pack | Type | Part no. | Std. pack |
|---|---|---|---|---|---|---|
| | ricos COUNTER | 83.035.5400.1 | 1 | ricos POSITION | 83.035.5410.1 | 1 |
| Mode display: | | | | | | |
| | 24 V – supply voltage connected: LED yellow | | | 24 V – supply voltage connected: LED yellow | | |
| | RUN – internal data transmission in progress: LED yellow | | | RUN – internal data transmission in progress: LED yellow | | |
| | channel LED – switching status: LED green | | | channel LED – switching status: LED green | | |
| | channel LED – channel cursor: LED yellow | | | channel LED – channel cursor: LED yellow | | |
| **Wiring diagrams, derating curves** | **see page 434** | | | **see page 434** | | |
| **Module data** | | | | | | |
| Number of ... | counters: 4 x 16 Bit or 2 x 32 Bit | | | controllable axes: 2 | | |
| Counting range | 0 to $2^{16}$ or 0 to $2^{32}$ | | | $-2^{31}$ up to $2^{31}-1$ | | |
| Number of inputs/outputs | 12/4 or 6/4 | | | 10/6 | | |
| Counting frequency | 200 Hz, 2 kHz, 20 kHz, 200 kHz configurable | | | max. 200 kHz | | |
| Configurable | via PC or PLC | | | via PC or PLC | | |
| Required space on control side | 3 to 5 words | | | 5 words | | |
| Input data | | | | | | |
| Switching level "0" (EN 61131-2) | –30 V...+5 V DC | | | –30 V...+5 V DC | | |
| Switching level "1" (EN 61131-2) | +15 V...+30 V DC | | | +15 V...+30 V DC | | |
| Input current / channel (at 24 V DC) | 7.5 mA | | | 7.5 mA | | |
| Status display | LED green | | | LED green | | |
| **Output data:** | | | | | | |
| Output voltage | operating voltage –0.5 V DC | | | operating voltage –0.5 V DC | | |
| Output current per channel | 1000 mA DC | | | 1000 mA DC | | |
| Max. total current per module | 4 A DC | | | 6 A DC | | |
| Simultaneity | 100 % | | | 100 % | | |
| Load types | resistive, inductive | | | resistive, inductive | | |
| Status display | LED green | | | LED green | | |
| Output response | resistant to overload and short-circuit | | | resistant to overload and short-circuit | | |
| Operating voltage / power input | 24 V DC, ±20 %, max. 5 % residual ripple/< 3 W | | | 24 V DC, ±20 %, max. 5 % residual ripple/< 3 W | | |
| **General** | | | | | | |
| Signal delay input/output | < 1 us/< 300 µs | | | < 100 µs | | |
| Max. voltage power contacts | 30 V DC | | | 30 V DC | | |
| Max. current power contacts | 8 A DC | | | 8 A DC | | |
| Insulation voltage | 350 V AC, 50 Hz (system / supply) | | | 350 V AC, 50 Hz (system / supply) | | |
| Creepage distances and clearances | DIN EN 61131-2; DIN EN 50178 | | | DIN EN 61131-2; DIN EN 50178 | | |
| Electrostatic discharge | EN 61000-4-2; 8 KV air; 4 KV contact | | | EN 61000-4-2; 8 KV air; 4 KV contact | | |
| Electromagnetic fields | ENV 50140; 10 V/m; 30...1000 MHz | | | ENV 50140; 10 V/m; 30...1000 MHz | | |
| Immunity / emitted interference | EN 61000-6-2/EN 55011, limit value class A, group 1 | | | EN 61000-6-2/EN 55011, limit value class A, group 1 | | |
| Burst | accord. to EN 61000-4-4 | | | accord. to EN 61000-4-4 | | |
| Connection style | spring connection | | | spring connection | | |
| Cross-sectional area-fine stranded / solid | 26 – 14 AWG / 26 – 16 AWG | | | 26 – 14 AWG / 26 – 16 AWG | | |
| Ambient temperature | 0 °C...+55 °C (accord. to DIN 40040) | | | 0 °C...+55 °C (accord. to DIN 40040) | | |
| Storage temperature | –25 °C...+75 °C (accord. to DIN 40040) | | | –25 °C...+75 °C (accord. to DIN 40040) | | |
| **Accessories** | | | | | | |
| Snap-on potential distributor for 3-wire and 4-wire operation | 83.039.0000.1 | | | 83.039.0000.1 | | |
| Adhesive labels, DIN A4 sheet | 05.591.3255.0 | | | 05.591.3255.0 | | |
| 2pole jumper for parallel output switching | Z7.258.1225.0 | | | Z7.258.1225.0 | | |
| Marking tag, 8-digit, unmarked | 04.242.1553.0 | | | 04.242.1553.0 | | |
| Marking tag, 8-digit, marked (upon request) | | | | | | |
| End clamp for DIN rail | Z5.522.8553.0 | | | Z5.522.8553.0 | | |
| Manual, English | 05.562.1389.0 | | | 05.562.1389.0 | | |



Specifications are subject to change without notice

# Distributed I/O Modules

ricos

## PT/TC Modules

**4 sensor inputs per module, self-setting to PT100/PT1000 sensors for 2-wire, 3-wire and 4-wire connection for thermocouples type J/K**

Dimensions (mm): W x H x D
69 x 92 x 51

**Analog module 4 inputs PT 100/1000**
CE; Approvals: cULus in preparation

**Analog module, 4 inputs TC J/K, T**
CE; Approvals: cULus in preparation

| **Description** | Type | Part no. | Std. pack | Type | Part no. | Std. pack |
|---|---|---|---|---|---|---|
| | ricos 4AI Pt100 | 83.035.4040.1 | 1 | ricos 4AI TC | 83.035.4050.1 | 1 |
| Mode display: | | | | | | |
| | 24 V – supply voltage connected: LED yellow | | | 24 V – supply voltage connected: LED yellow | | |
| | RUN – internal data transmission in progress: LED yellow | | | RUN – internal data transmission in progress: LED yellow | | |
| | channel LED – switching status: LED green | | | channel LED – switching status: LED green | | |
| | channel LED – channel cursor: LED yellow | | | channel LED – channel cursor: LED yellow | | |
| **Wiring diagrams, derating curves** | **see page 434** | | | **see page 434** | | |
| **Module data** | **Module data (accessories)** | | | | | |
| Number of inputs | 4 | | | 4 | | |
| Temperature probe | PT 100; PT 1000; self-setting | | | J, K, T | | |
| Operating voltage | 24 V DC, ±20 %, max. 5 % residual ripple | | | 24 V DC, ±20 %, max. 5 % residual ripple | | |
| Power input | < 3 W | | | < 3 W | | |
| Configurable | PC, PLC, diagnosis code 9 bus coupler | | | PC, PLC, diagnosis code 9 bus coupler | | |
| Required space on control side | 1 to 4 input words (depending on configuration) | | | 1 to 4 input words (depending on configuration) | | |
| **Technical information** | | | | | | |
| Measuring range | –100 °C...+450 °C | | | –100...+1370 °C | | |
| Resolution | 16 Bit | | | 14 Bit + sign | | |
| Sampling frequency | 2 ms | | | 2 ms | | |
| Resolution | < 0.1 °C | | | 0.1 °C | | |
| Accuracy | ±1 °C | | | 0.5% over total measuring range | | |
| Power supply sensor | supply via PT 100 module | | | | | |
| Measuring time | < 100 ms | | | < 100 ms | | |
| Insulation voltage | 350 V AC, 50 Hz (system / supply) | | | 350 V AC, 50 Hz (system / supply) | | |
| Creepage distances and clearances | DIN EN 61131-2; DIN EN 50178 | | | DIN EN 61131-2; DIN EN 50178 | | |
| Electrostatic discharge | EN 61000-4-2; 8 KV air; 4 KV contact | | | EN 61000-4-2; 8 KV air; 4 KV contact | | |
| Electromagnetic fields | ENV 50140; 10 V/m; 30...1000 MHz | | | ENV 50140; 10 V/m; 30...1000 MHz | | |
| Immunity / emitted interference | EN 61000-6-2/EN 55011, limit value class A, group 1 | | | EN 61000-6-2/EN 55011, limit value class A, group 1 | | |
| Burst | accord. to EN 61000-4-4 | | | accord. to EN 61000-4-4 | | |
| Connection style | spring connection | | | spring connection | | |
| Cross-sectional area-fine stranded / solid | 26 – 14 AWG / 26 – 16 AWG | | | 26 – 14 AWG / 26 – 16 AWG | | |
| Ambient temperature | 0 °C...+55 °C (accord. to DIN 40040) | | | 0 °C...+55 °C (accord. to DIN 40040) | | |
| Storage temperature | –25 °C...+75 °C (accord. to DIN 40040) | | | –25 °C...+75 °C (accord. to DIN 40040) | | |
| **Accessories** | | | | | | |
| Snap-on potential distributor for 3-wire and 4-wire operation | 83.039.0000.1 | | | | | |
| Adhesive labels, DIN A4 sheet | 05.591.3255.0 | | | | | |
| 2pole jumper for parallel output switching | Z7.258.1225.0 | | | | | |
| Marking tag, 8-digit, unmarked | 04.242.1553.0 | | | | | |
| Marking tag, 8-digit, marked (upon request) | | | | | | |
| End clamp for DIN rail | Z5.522.8553.0 | | | | | |
| Manual, English | 05.562.1389.0 | | | 05.562.1389.0 | | |

# Distributed I/O Modules

ricos

## Analog I/O modules

**for default signals of 0...10 V or ±10 V**
**for 2-wire, 3-wire and 4-wire connection**
**Electronic components can be replaced without disconnecting the wiring**

Dimensions (mm): W x H x D
69 x 92 x 51

### Analog I/O module 4 inputs 0 to 10 V

CE; Approvals: cULus in preparation

### Analog I/O module 4 inputs ±10 V

CE; Approvals: cULus

| Description | Type | Part no. | Std. pack | Type | Part no. | Std. pack |
|---|---|---|---|---|---|---|
| | ricos 4AI/0...10 V | 83.035.4001.1 | 1 | ricos 4AI/±10 V | 83.035.4000.1 | 1 |
| Mode display: | 24 V – supply voltage connected: LED yellow | | | 24 V – supply voltage connected: LED yellow | | |
| | RUN – internal data transmission in progress: LED yellow | | | RUN – internal data transmission in progress: LED yellow | | |
| | channel LED – switching status: LED green | | | channel LED – switching status: LED green | | |
| | channel LED – channel cursor: LED yellow | | | channel LED – channel cursor: LED yellow | | |
| **Wiring diagrams, derating curves** | **see page 433** | | | **see page 433** | | |
| **Module data** | | | | | | |
| Number of inputs | 4 | | | 4 | | |
| Number of outputs | 0 | | | 0 | | |
| Operating voltage | 24 V DC, ±20 %, max. 5 % residual ripple | | | 24 V DC, ±20 %, max. 5 % residual ripple | | |
| Power input | < 2.5 W | | | < 2.5 W | | |
| Configurable | PC, PLC, diagnosis code 9 bus coupler | | | PC, PLC, diagnosis code 9 bus coupler | | |
| Required space on control side | 1 to 4 input words (depending on configuration) | | | 1 to 4 input words (depending on configuration) | | |
| **Technical information** | | | | | | |
| Measuring range | 0...+9.995 V | | | –10...+9.995 V | | |
| Resolution | 12 Bit | | | 12 Bit | | |
| Sampling frequency | < 2 ms | | | < 2 ms | | |
| Offset error | typ. 0.5 LSB; max. 1 LSB | | | typ. 0.5 LSB; max. 1 LSB | | |
| Channel crosstalk | –74 dB (f < 100 Hz) | | | –74 dB (f < 100 Hz) | | |
| Gain error | typ. 0.08 % FSR; max. 0.2 % FSR | | | typ. 0.08 % FSR; max. 0.2 % FSR | | |
| Noise voltage | typ. 0.5 LSB; max. 2 LSB | | | typ. 0.5 LSB; max. 2 LSB | | |
| Offset error due to source impedance | +3 LSB/kOhm (Uinput = 0 V) | | | +3 LSB/kOhm (Uinput = 0 V) | | |
| Galvanic isolation | 75 V (AGND/shield) | | | 75 V (AGND/shield) | | |
| Common mode range | +12.8 V DC | | | –12.8 V/+12.8 V DC | | |
| Input resistance | 1 MOhm | | | 1 MOhm | | |
| Input current | typ. 15 µA | | | typ. 15 µA | | |
| Short-circuit current / short-circuit duration | – | | | – | | |
| Ripple | – | | | – | | |
| Voltage range for open-circuit recognition on both sides | 9.9 V (floating source) | | | –10V/9.9 V (floating source) | | |
| Common mode rejection | 87 dB (f = DC); 70 dB (f = 50 Hz); 60 dB (f = 1 kHz) | | | 87 dB (f = DC); 70 dB (f = 50 Hz); 60 dB (f = 1 kHz) | | |
| Common mode input resistance | 500 kOhm (inputs short-circuited against AGND) | | | 500 kOhm (inputs short-circuited against AGND) | | |
| Capacitive common mode input resistance | 4.4 nF (inputs short-circuited against AGND) | | | 4.4 nF (inputs short-circuited against AGND) | | |
| Dynamic common mode input resistance | 1.1 kOhm (f > 100 kHz) | | | 1.1 kOhm (f > 100 kHz) | | |
| Insulation voltage | 350 V AC, 50 Hz (system / supply) | | | 350 V AC, 50 Hz (system / supply) | | |
| Creepage distances and clearances | DIN EN 61131-2; DIN EN 50178 | | | DIN EN 61131-2; DIN EN 50178 | | |
| Electrostatic discharge | EN 61000-4-2; 8 KV air; 4 KV contact | | | EN 61000-4-2; 8 KV air; 4 KV contact | | |
| Electromagnetic fields | ENV 50140; 10 V/m; 30...1000 MHz | | | ENV 50140; 10 V/m; 30...1000 MHz | | |
| Immunity/emitted interference | EN 61000-6-2/EN 55011, limit value class A, group 1 | | | EN 61000-6-2/EN 55011, limit value class A, group 1 | | |
| Burst | accord. to EN 61000-4-4 | | | accord. to EN 61000-4-4 | | |
| Connection style | spring connection | | | spring connection | | |
| Cross-sectional area-fine stranded / solid | 26 – 14 AWG / 26 – 16 AWG | | | 26 – 14 AWG / 26 – 16 AWG | | |
| Ambient temperature | 0 °C...+55 °C (accord. to DIN 40040) | | | 0 °C...+55 °C (accord. to DIN 40040) | | |
| Storage temperature | –25 °C...+75 °C (accord. to DIN 40040) | | | –25 °C...+75 °C (accord. to DIN 40040) | | |
| **Accessories** | | | | | | |
| Snap-on potential distributor for 3-wire and 4-wire operation | 83.039.0000.1 | | | 83.039.0000.1 | | |
| Adhesive labels, DIN A4 sheet | 05.591.3255.0 | | | 05.591.3255.0 | | |
| 2pole jumper for parallel output switching | Z7.258.1225.0 | | | Z7.258.1225.0 | | |
| Marking tag, 8-digit, unmarked | 04.242.1553.0 | | | 04.242.1553.0 | | |
| Marking tag, 8-digit, marked (upon request) | | | | | | |
| End clamp for DIN rail | Z5.522.8553.0 | | | Z5.522.8553.0 | | |
| Manual, English | 05.562.1389.0 | | | 05.562.1389.0 | | |



Specifications are subject to change without notice

# ricos

## Analog I/O modules

**for default signals of 0...10 V or ±10 V**
**for 2-wire, 3-wire and 4-wire connection**
**Electronic components can be replaced without disconnecting the wiring**

Dimensions (mm): W x H x D
69 x 92 x 51

### Analog I/O module
### 4 inputs and 4 outputs 0 to 10 V

CE; Approvals: cULus in preparation

### Analog I/O module
### 4 inputs and 4 outputs ±10 V

CE; Approvals: cULus

| Description | Type | Part no. | Std. pack | Type | Part no. | Std. pack |
|---|---|---|---|---|---|---|
| | ricos 4AI4AO/0...10 V | 83.035.4101.1 | 1 | ricos 4AI4AO/±10 V | 83.035.4100.1 | 1 |
| Mode display: | 24 V – supply voltage connected: LED yellow | | | 24 V – supply voltage connected: LED yellow | | |
| | RUN – internal data transmission in progress: LED yellow | | | RUN – internal data transmission in progress: LED yellow | | |
| | channel LED – switching status: LED green | | | channel LED – switching status: LED green | | |
| | channel LED – channel cursor: LED yellow | | | channel LED – channel cursor: LED yellow | | |
| **Wiring diagrams, derating curves** | **see page 433** | | | **see page 433** | | |
| **Module data** | | | | | | |
| Number of inputs | 4 | | | 4 | | |
| Number of outputs | 4 | | | 4 | | |
| Operating voltage | 24 V DC, ±20 %, max. 5 % residual ripple | | | 24 V DC, ±20 %, max. 5 % residual ripple | | |
| Power input | < 2.5 W | | | < 2.5 W | | |
| Configurable | PC, PLC, diagnosis code 9 bus coupler | | | PC, PLC, diagnosis code 9 bus coupler | | |
| Required space on control side | 1 to 4 input / output words (depending on configuration) | | | 1 to 4 input / output words (depending on configuration) | | |
| **Technical information** | | | | | | |
| Measuring range | 0...+9.995 V | | | –10...+9.995 V | | |
| Resolution | 12 Bit | | | 12 Bit | | |
| Sampling frequency | < 2 ms | | | < 2 ms | | |
| Offset error | typ. 0.5 LSB; max. 1 LSB | | | typ. 0.5 LSB; max. 1 LSB | | |
| Channel crosstalk | –74 dB (f < 100 Hz) | | | –74 dB (f < 100 Hz) | | |
| Gain error | Input: max. 0.2 % FSR; output: max. 0.12 % FSR | | | typ. 0.08 % FSR; max. 0.2 % FSR | | |
| Noise voltage | typ. 0.5 LSB; max. 2 LSB | | | typ. 0.5 LSB; max. 2 LSB | | |
| Offset error | Input: +3 LSB/kOhm (Uinput = 0 V); output:: max. 10 mV | | | +3 LSB/kOhm (Uinput = 0 V) | | |
| Galvanic isolation | 75 V (AGND/shield) | | | 75 V (AGND/shield) | | |
| Common mode range | +12.8 V DC | | | –12.8 V/+12.8 V DC | | |
| Input resistance | 1 MOhm | | | 1 MOhm | | |
| Input current/output current | typ. 15 µA/10 mA | | | typ. 15 µA | | |
| Short-circuit current / short-circuit duration | 20 mA/100 % ON | | | 20 mA/100 % ON | | |
| Ripple | 5 mV | | | 5 mV | | |
| Voltage range for open-circuit recognition on both sides | 9.9 V (floating source) | | | -10V/9.9 V (floating source) | | |
| Common mode rejection | 87 dB (f = DC); 70 dB (f = 50 Hz); 60 dB (f = 1 kHz) | | | 87 dB (f = DC); 70 dB (f = 50 Hz); 60 dB (f = 1 kHz) | | |
| Common mode input resistance | 500 kOhm (inputs short-circuited against AGND) | | | 500 kOhm (inputs short-circuited against AGND) | | |
| Capacitive common mode input resistance | 4.4 nF (inputs short-circuited against AGND) | | | 4.4 nF (inputs short-circuited against AGND) | | |
| Dynamic common mode input resistance | 1.1 kOhm (f > 100 kHz) | | | 1.1 kOhm (f > 100 kHz) | | |
| Insulation voltage | 350 V AC, 50 Hz (system / supply) | | | 350 V AC, 50 Hz (system / supply) | | |
| Creepage distances and clearances | DIN EN 61131-2; DIN EN 50178 | | | DIN EN 61131-2; DIN EN 50178 | | |
| Electrostatic discharge | EN 61000-4-2; 8 KV air; 4 KV contact | | | EN 61000-4-2; 8 KV air; 4 KV contact | | |
| Electromagnetic fields | ENV 50140; 10 V/m; 30...1000 MHz | | | ENV 50140; 10 V/m; 30...1000 MHz | | |
| Immunity / emitted interference | EN 61000-6-2/EN 55011, limit value class A, group 1 | | | EN 61000-6-2/EN 55011, limit value class A, group 1 | | |
| Burst | accord. to EN 61000-4-4 | | | accord. to EN 61000-4-4 | | |
| Connection style | spring connection | | | spring connection | | |
| Cross-sectional area-fine stranded / solid | 26 – 14 AWG / 26 – 16 AWG | | | 26 – 14 AWG / 26 – 16 AWG | | |
| Ambient temperature | 0 °C...+55 °C (accord. to DIN 40040) | | | 0 °C...+55 °C (accord. to DIN 40040) | | |
| Storage temperature | –25 °C...+75 °C (accord. to DIN 40040) | | | –25 °C...+75 °C (accord. to DIN 40040) | | |
| **Accessories** | | | | | | |
| Snap-on potential distributor for 3-wire and 4-wire operation | 83.039.0000.1 | | | 83.039.0000.1 | | |
| Adhesive labels, DIN A4 sheet | 05.591.3255.0 | | | 05.591.3255.0 | | |
| 2pole jumper for parallel output switching | Z7.258.1225.0 | | | Z7.258.1225.0 | | |
| Marking tag, 8-digit, unmarked | 04.242.1553.0 | | | 04.242.1553.0 | | |
| Marking tag, 8-digit, marked (upon request) | | | | | | |
| End clamp for DIN rail | Z5.522.8553.0 | | | Z5.522.8553.0 | | |
| Manual, English | 05.562.1389.0 | | | 05.562.1389.0 | | |

# Distributed I/O Modules

ricos

## Analog I/O modules

**for default signals of 0...20 mA**
**for 2-wire, 3-wire and 4-wire connection**
**Electronic components can be replaced without disconnecting the wiring**

Dimensions (mm): W x H x D
69 x 92 x 51

## Analog I/O module 4 inputs 0 to 20 mA

CE; Approvals: cULus

| Description | Type | Part no. | Std. pack |
|---|---|---|---|
| | ricos 4AI/0–20 mA | 83.035.4010.1 | 1 |
| Mode display: | | | |
| | 24 V – supply voltage connected: LED yellow | | |
| | RUN – internal data transmission in progress: LED yellow | | |
| | channel LED – switching status: LED green | | |
| | channel LED – channel cursor: LED yellow | | |
| **Wiring diagrams, derating curves** | **see page 433** | | |
| **Module data** | | | |
| Number of inputs | 4 | | |
| Number of outputs | 0 | | |
| Operating voltage | 24 V DC, ±20 %, max. 5 % residual ripple | | |
| Power input | < 2.5 W | | |
| Configurable | PC, PLC, diagnosis code 9 bus coupler | | |
| Required space on control side | 1 to 4 input words (depending on configuration) | | |
| **Technical information** | | | |
| Measuring range | 0...+19.995 mA | | |
| Resolution | 12 Bit | | |
| Sampling frequency | 2 ms | | |
| Offset error | typ. 0.5 LSB; max. 1 LSB | | |
| Channel crosstalk | –74 dB (f < 100 Hz) | | |
| Gain error | max. 0.45 % FSR | | |
| Noise voltage | typ. 0.5 LSB; max. 2 LSB | | |
| Drift rate | – | | |
| Galvanic isolation | 75 V (AGND/shield) | | |
| Output load | max. 100.1 Ohm | | |
| Continuous input current | 40 mA bei 100 % ON | | |
| Continuous input voltage | 4 V bei 100 % ON | | |
| Short-circuit current / short-circuit duration | – | | |
| Ripple | – | | |
| Dynamic common mode input resistance | 1.1 kOhm (f > 100 kHz) | | |
| Insulation voltage | 350 V AC, 50 Hz (system / supply) | | |
| Creepage distances and clearances | DIN EN 61131-2; DIN EN 50178 | | |
| Electrostatic discharge | EN 61000-4-2; 8 KV air; 4 KV contact | | |
| Electromagnetic fields | ENV 50140; 10 V/m; 30...1000 MHz | | |
| Immunity / emitted interference | EN 61000-6-2/EN 55011, limit value class A, group 1 | | |
| Burst | accord. to EN 61000-4-4 | | |
| Connection style | spring connection | | |
| Cross-sectional area-fine stranded / solid | 26 – 14 AWG / 26 – 16 AWG | | |
| Ambient temperature | 0 °C...+55 °C (accord. to DIN 40040) | | |
| Storage temperature | –25 °C...+75 °C (accord. to DIN 40040) | | |
| **Accessories** | | | |
| Snap-on potential distributor for 3-wire and 4-wire operation | 83.039.0000.1 | | |
| Adhesive labels, DIN A4 sheet | 05.591.3255.0 | | |
| 2pole jumper for parallel output switching | Z7.258.1225.0 | | |
| Marking tag, 8-digit, unmarked | 04.242.1553.0 | | |
| Marking tag, 8-digit, marked (upon request) | | | |
| End clamp for DIN rail | Z5.522.8553.0 | | |
| Manual, English | 05.562.1389.0 | | |



Specifications are subject to change without notice

# ricos

## Analog I/O modules

**for default signals of 0...20 mA or 4...20 mA**
**for 2-wire, 3-wire and 4-wire connection**
**Electronic components can be replaced without disconnecting the wiring**

Dimensions (mm): W x H x D
69 x 92 x 51

| Description | Type | Part no. | Std. pack | Type | Part no. | Std. pack |
|---|---|---|---|---|---|---|
| | ricos 4AIAO/0–20 mA | 83.035.4110.1 | 1 | ricos 4AIAO/4–20 mA | 83.035.4111.1 | 1 |
| Mode display: | | | | | | |
| | 24 V – supply voltage connected: LED yellow | | | 24 V – supply voltage connected: LED yellow | | |
| | RUN – internal data transmission in progress: LED yellow | | | RUN – internal data transmission in progress: LED yellow | | |
| | channel LED – switching status: LED green | | | channel LED – switching status: LED green | | |
| | channel LED – channel cursor: LED yellow | | | channel LED – channel cursor: LED yellow | | |
| **Wiring diagrams, derating curves** | **see page 433** | | | **see page 433** | | |
| **Module data** | | | | | | |
| Number of inputs | 4 | | | 4 | | |
| Number of outputs | 4 | | | 4 | | |
| Operating voltage | 24 V DC, ±20 %, max. 5 % residual ripple | | | 24 V DC, ±20 %, max. 5 % residual ripple | | |
| Power input | < 2.5 W | | | < 2.5 W | | |
| Configurable | PC, PLC, diagnosis code 9 bus coupler | | | PC, PLC, diagnosis code 9 bus coupler | | |
| Required space on control side | 1 to 4 input / output words (depending on configuration) | | | 1 to 4 input / output words (depending on configuration) | | |
| **Technical information** | | | | | | |
| Measuring range | 0...+19.995 mA | | | 4...+19.995 mA | | |
| Resolution | 12 Bit | | | 12 Bit | | |
| Sampling frequency | 2 ms | | | 2 ms | | |
| Offset error | Input: max. 1 LSB; output: max. 4 uA | | | Input: max. 1 LSB; output: max. 4 uA | | |
| Channel crosstalk | –74 dB (f < 100 Hz) | | | –74 dB (f < 100 Hz) | | |
| Gain Error | Input: max. 0.45 % FSR; output: max. 0.5 % FSR | | | Input: max. 0.45 % FSR; output: max. 0.5 % FSR | | |
| Noise voltage | typ. 0.5 LSB; max. 2 LSB | | | typ. 0.5 LSB; max. 2 LSB | | |
| Drift rate | 4 µA/ms | | | 4 µA/ms | | |
| Galvanic isolation | 75 V (AGND/shield) | | | 75 V (AGND/shield) | | |
| Output load | Input: max. 100.1 Ohm; output: 500 Ohm | | | Input: max. 100.1 Ohm; output: 500 Ohm | | |
| Continuous input current | 40 mA bei 100 % ON | | | 40 mA bei 100 % ON | | |
| Continuous input voltage | 4 V bei 100 % ON | | | 4 V bei 100 % ON | | |
| Short-circuit current / short-circuit duration | 20 mA; 100 % ON | | | 20 mA; 100 % ON | | |
| Ripple | 10 µA | | | 10 µA | | |
| Dynamic common mode input resistance | 1.1 kOhm (f > 100 kHz) | | | 1.1 kOhm (f > 100 kHz) | | |
| Insulation voltage | 350 V AC, 50 Hz (system / supply) | | | 350 V AC, 50 Hz (system / supply) | | |
| Creepage distances and clearances | DIN EN 61131-2; DIN EN 50178 | | | DIN EN 61131-2; DIN EN 50178 | | |
| Electrostatic discharge | EN 61000-4-2; 8 KV air; 4 KV contact | | | EN 61000-4-2; 8 KV air; 4 KV contact | | |
| Electromagnetic fields | ENV 50140; 10 V/m; 30...1000 MHz | | | ENV 50140; 10 V/m; 30...1000 MHz | | |
| Immunity / emitted interference | EN 61000-6-2/EN 55011, limit value class A, group 1 | | | EN 61000-6-2/EN 55011, limit value class A, group 1 | | |
| Burst | accord. to EN 61000-4-4 | | | accord. to EN 61000-4-4 | | |
| Connection style | spring connection | | | spring connection | | |
| Cross-sectional area-fine stranded / solid | 26 – 14 AWG / 26 – 16 AWG | | | 26 – 14 AWG / 26 – 16 AWG | | |
| Ambient temperature | 0 °C...+55 °C (accord. to DIN 40040) | | | 0 °C...+55 °C (accord. to DIN 40040) | | |
| Storage temperature | –25 °C...+75 °C (accord. to DIN 40040) | | | –25 °C...+75 °C (accord. to DIN 40040) | | |
| **Accessories** | | | | | | |
| Snap-on potential distributor for 3-wire and 4-wire operation | 83.039.0000.1 | | | 83.039.0000.1 | | |
| Adhesive labels, DIN A4 sheet | 05.591.3255.0 | | | 05.591.3255.0 | | |
| 2pole jumper for parallel output switching | Z7.258.1225.0 | | | Z7.258.1225.0 | | |
| Marking tag, 8-digit, unmarked | 04.242.1553.0 | | | 04.242.1553.0 | | |
| Marking tag, 8-digit, marked (upon request) | | | | | | |
| End clamp for DIN rail | Z5.522.8553.0 | | | Z5.522.8553.0 | | |
| Manual, English | 05.562.1389.0 | | | 05.562.1389.0 | | |

Approvals: CE; Approvals: CE; in preparation

# Distributed I/O Modules

ricos

## Field bus coupler including DI/DO channels

**Compact modules configurable as input or output for 2-wire, 3-wire and 4-wire connection**
**Electronic components can be replaced without disconnecting the wiring**

Dimensions (mm): W x H x D
69 x 92 x 51

| | Compact modules PROFIBUS DP<br>CE; Approvals: cULus, Profibus certification | | | Compact modules Interbus<br>CE; Approvals: cULus, Interbus certification | | |
|---|---|---|---|---|---|---|
| 8 DI or 8 DO (configurable) | ricos com-dp 8I/O | 83.030.1100.1 | 1 | ricos com-s 8I/O | 83.031.1100.1 | 1 |
| 16 DI | ricos com-dp 16I | 83.030.1000.1 | 1 | ricos com-s 16I | 83.031.1000.1 | 1 |
| 16 DO | ricos com-dp 16O | 83.030.1200.1 | 1 | ricos com-s 16O | 83.031.1200.1 | 1 |
| 8 DI and 8 DI/8 DO configurable* | ricos com-dp 8I 8I/O | 83.030.1300.1 | 1 | ricos com-s 8I 8I/O | 83.031.1300.1 | 1 |
| Mode display: | | | | | | |
| | 24 V – supply voltage connected: LED yellow | | | 24 V – supply voltage connected: LED yellow | | |
| | RUN – internal data transmission in progress: LED yellow | | | RUN – internal data transmission in progress: LED yellow | | |
| | channel LED – switching status: LED green | | | channel LED – switching status: LED green | | |
| | channel LED – channel cursor: LED yellow | | | channel LED – channel cursor: LED yellow | | |
| **Wiring diagrams, derating curves** | **see page 431** | | | **see page 431** | | |
| **System data** | | | | | | |
| Max. number of nodes | 126 | | | 256 | | |
| Transmission medium | screened copper cable 2 x 0.25 mm²/AWG 23 | | | screened copper cable 5 x 0.25 mm²/AWG 23 | | |
| Max. network expansion | 100 m – 1200 m (depending on baud rate / cable) | | | 400 m (remote bus) | | |
| Baud rate | 9.6 kBaud...12 Mbaud | | | 500 kBaud | | |
| Internal bus refresh | 2 ms | | | 2 ms | | |
| Bus connection | 1 x D-SUB 9, screened female connector | | | 2 x D-SUB 9, screened female and male connectors | | |
| **Input data** | | | | | | |
| Switching level "0" (EN 61131-2) | –30 V...+5 V DC | | | –30 V...+5 V DC | | |
| Switching level "1" (EN 61131-2) | +15 V...+30 V DC | | | +15 V...+30 V DC | | |
| Input current / channel (at 24 V DC) | 4.5 mA/6.5 mA (combin. I/O) | | | 4.5 mA/6.5 mA (combin. I/O) | | |
| Status display | LED green | | | LED green | | |
| **Output data:** | | | | | | |
| Output voltage | operating voltage –0.5 V DC | | | operating voltage –0.5 V DC | | |
| Output current per channel | 1000 mA DC | | | 1000 mA DC | | |
| Max. total current per module | 8 A DC | | | 8 A DC | | |
| Simultaneity | 100 % at max. 500 mA per channel | | | 100 % at max. 500 mA per channel | | |
| Load types | resistive, inductive | | | resistive, inductive | | |
| Status display | LED green | | | LED green | | |
| Output response | resistant to overload and short-circuit | | | resistant to overload and short-circuit | | |
| **General** | | | | | | |
| Signal delay per I/O channel | < 100 µs | | | < 100 µs | | |
| Max. voltage power contacts | 30 V DC | | | 30 V DC | | |
| Max. current power contacts | 8 A DC | | | 8 A DC | | |
| Insulation voltage | 350 V AC, 50 Hz (system / supply) | | | 350 V AC, 50 Hz (system / supply) | | |
| Creepage distances and clearances | DIN EN 61131-2; DIN EN 50178 | | | DIN EN 61131-2; DIN EN 50178 | | |
| Electrostatic discharge | EN 61000-4-2; 8 KV air; 4 KV contact | | | EN 61000-4-2; 8 KV air; 4 KV contact | | |
| Electromagnetic fields | ENV 50140; 10 V/m; 30...1000 MHz | | | ENV 50140; 10 V/m; 30...1000 MHz | | |
| Immunity / emitted interference | EN 61000-6-2/EN 55011, limit value class A, group 1 | | | EN 61000-6-2/EN 55011, limit value class A, group 1 | | |
| Burst | accord. to EN 61000-4-4 | | | accord. to EN 61000-4-4 | | |
| Connection style | spring connection | | | spring connection | | |
| Cross-sectional area-fine stranded / solid | 26 – 14 AWG / 26 – 16 AWG | | | 26 – 14 AWG / 26 – 16 AWG | | |
| Ambient temperature | 0 °C...+55 °C (accord. to DIN 40040) | | | 0 °C...+55 °C (accord. to DIN 40040) | | |
| Storage temperature | –25 °C...+75 °C (accord. to DIN 40040) | | | –25 °C...+75 °C (accord. to DIN 40040) | | |
| **Accessories** | | | | | | |
| Snap-on potential distributor for 3-wire and 4-wire operation | 83.039.0000.1 | | | 83.039.0000.1 | | |
| Adhesive labels, DIN A4 sheet | 05.591.3255.0 | | | 05.591.3255.0 | | |
| 2pole jumper for parallel output switching | Z7.258.1225.0 | | | Z7.258.1225.0 | | |
| Marking tag, 8-digit, unmarked | 04.242.1553.0 | | | 04.242.1553.0 | | |
| Marking tag, 8-digit, marked (upon request) | | | | | | |
| End clamp for DIN rail | Z5.522.8553.0 | | | Z5.522.8553.0 | | |
| GSD file and Word template for labels | 05.591.3255.0 | | | 05.591.3255.0 | | |
| Manual, English | 05.562.1389.0 | | | 05.562.1389.0 | | |



Specifications are subject to change without notice

# ricos

## Field bus coupler including DI/DO channels

**Compact modules**
**Configurable as input or output for 2-wire, 3-wire and 4-wire connection**

**Electronic components can be replaced without disconnecting the wiring**

Dimensions (mm): W x H x D
69 x 92 x 51

### Compact modules DeviceNet

CE; Approvals: c UL us

### Compact modules CANopen

CE; Approvals: c UL us in preparation

| Description | Type | Part no. | Std. pack | Type | Part no. | Std. pack |
|---|---|---|---|---|---|---|
| 8 DI or 8 DO (configurable) | ricos com-dn 8I/O | 83.032.1100.1 | 1 | ricos com-co 8I/O | 83.033.1100.1 | 1 |
| 16 DI | ricos com-dn 16I | 83.032.1000.1 | 1 | ricos com-co 16I | 83.033.1000.1 | 1 |
| 16 DO | ricos com-dn 16O | 83.032.1200.1 | 1 | ricos com-co 16O | 83.033.1200.1 | 1 |
| 8 DI and 8 DI/8 DO configurable | ricos com-dn 8I 8I/O | 83.032.1300.1 | 1 | ricos com-co 8I 8I/O | 83.033.1300.1 | 1 |
| Mode display: | 24 V – supply voltage connected: LED yellow | | | 24 V – supply voltage connected: LED yellow | | |
| | RUN – internal data transmission in progress: LED yellow | | | RUN – internal data transmission in progress: LED yellow | | |
| | channel LED – switching status: LED green | | | channel LED – switching status: LED green | | |
| | channel LED – channel cursor: LED yellow | | | channel LED – channel cursor: LED yellow | | |
| **Wiring diagrams, derating curves** | **see page 431** | | | **see page 431** | | |
| **System data** | | | | | | |
| Max. number of nodes | 64 with repeater | | | 256 | | |
| Transmission medium | screened copper cable trunk line AWG 15.18 | | | screened copper cable 3 x 0.25 mm²/AWG 23 | | |
| | screened copper cable drop line AWG 22,24 | | | | | |
| Max. network expansion | 100 m–500 m (depending on baud rate / cable) | | | 100 m–500 m (depending on baud rate / cable) | | |
| Baud rate | 125/250/500 kBaud (setting via keyboard) | | | 10 kBaud...1 MBaud (setting via keyboard) | | |
| Internal bus refresh | 2 ms | | | 2 ms | | |
| Bus connection | 5pole connector, screw | | | 5pole connector, screw | | |
| **Input data** | | | | | | |
| Switching level "0" (EN 61131-2) | –30 V...+5 V DC | | | –30 V...+5 V DC | | |
| Switching level "1" (EN 61131-2) | +15 V...+30 V DC | | | +15 V...+30 V DC | | |
| Input current / channel (at 24 V DC) | 4.5 mA/6.5 mA (combin. I/O) | | | 4.5 mA/6.5 mA (combin. I/O) | | |
| Status display | LED green | | | LED green | | |
| **Output data:** | | | | | | |
| Output voltage | operating voltage –0.5 V DC | | | operating voltage –0.5 V DC | | |
| Output current per channel | 1000 mA DC | | | 1000 mA DC | | |
| Max. total current per module | 8 A DC | | | 8 A DC | | |
| Simultaneity | 100 % at max. 500 mA per channel | | | 100 % at max. 500 mA per channel | | |
| Load types | resistive, inductive | | | resistive, inductive | | |
| Status display | LED green | | | LED green | | |
| Output response | resistant to overload and short-circuit | | | resistant to overload and short-circuit | | |
| **General** | | | | | | |
| Signal delay per I/O channel | < 100 us | | | < 100 us | | |
| Max. voltage power contacts | 30 V DC | | | 30 V DC | | |
| Max. current power contacts | 8 A DC | | | 8 A DC | | |
| Insulation voltage | 350 V AC, 50 Hz (system / supply) | | | 350 V AC, 50 Hz (system / supply) | | |
| Creepage distances and clearances | DIN EN 61131-2; DIN EN 50178 | | | DIN EN 61131-2; DIN EN 50178 | | |
| Electrostatic discharge | EN 61000-4-2; 8 KV air; 4 KV contact | | | EN 61000-4-2; 8 KV air; 4 KV contact | | |
| Electromagnetic fields | ENV 50140; 10 V/m; 30...1000 MHz | | | ENV 50140; 10 V/m; 30...1000 MHz | | |
| Immunity/emitted interference | EN 61000-6-2/EN 55011, limit value class A, group 1 | | | EN 61000-6-2/EN 55011, limit value class A, group 1 | | |
| Burst | accord. to EN 61000-4-4 | | | accord. to EN 61000-4-4 | | |
| Connection style | spring connection | | | spring connection | | |
| Cross-sectional area-fine stranded / solid | 26 – 14 AWG / 26 – 16 AWG | | | 26 – 14 AWG / 26 – 16 AWG | | |
| Ambient temperature | 0 °C...+55 °C (accord. to DIN 40040) | | | 0 °C...+55 °C (accord. to DIN 40040) | | |
| Storage temperature | –25 °C...+75 °C (accord. to DIN 40040) | | | –25 °C...+75 °C (accord. to DIN 40040) | | |
| **Accessories** | | | | | | |
| Snap-on potential distributor for 3-wire and 4-wire operation | 83.039.0000.1 | | | 83.039.0000.1 | | |
| Adhesive labels, DIN A4 sheet | 05.591.3255.0 | | | 05.591.3255.0 | | |
| 2pole jumper for parallel output switching | Z7.258.1225.0 | | | Z7.258.1225.0 | | |
| Marking tag, 8-digit, unmarked | 04.242.1553.0 | | | 04.242.1553.0 | | |
| Marking tag, 8-digit, marked (upon request) | | | | | | |
| End clamp for DIN rail | Z5.522.8553.0 | | | Z5.522.8553.0 | | |
| EDS file and Word template for labels | 05.591.3255.0 | | | 05.591.3255.0 | | |
| Manual, English | 05.562.1389.0 | | | 05.562.1389.0 | | |

## Wiring diagrams of the Buscoupler

### PROFIBUS DP

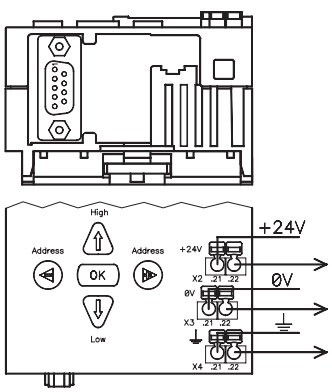


### Interbus

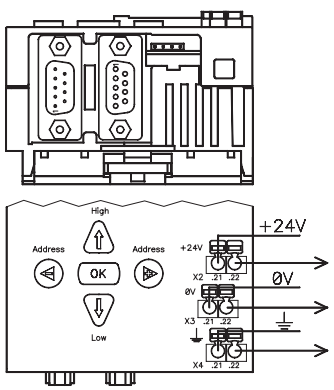


### DeviceNet and CANopen

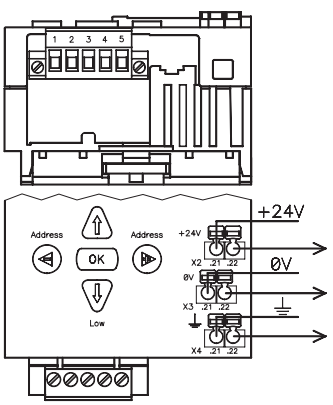


### Ethernet

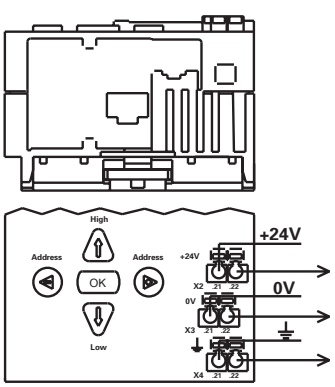


## Wiring diagrams of economy Buscoupler

### PROFIBUS DP

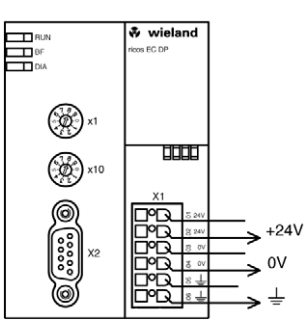


### Interbus

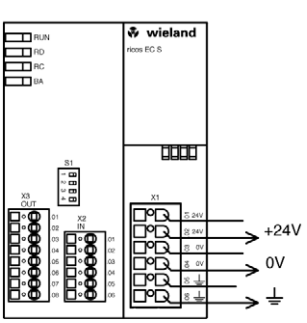


### DeviceNet and CANopen

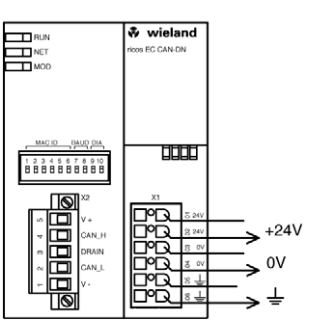




Specifications are subject to change without notice

# ricos

## Wiring diagrams of binary and compact modules

### *ricos* 8I/O and *ricos* COM 8I/O

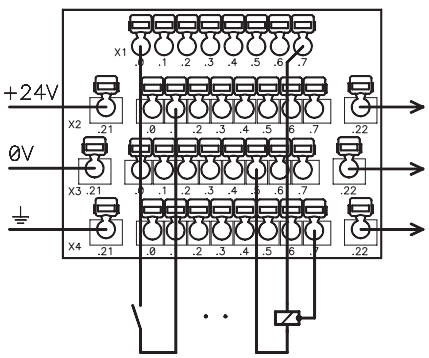


### *ricos* 16I and *ricos* COM 16I

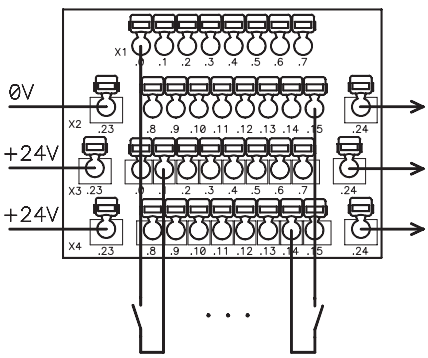


### *ricos* COM-DP

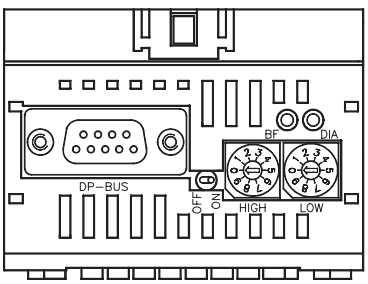


### *ricos* 16O and *ricos* COM 16O

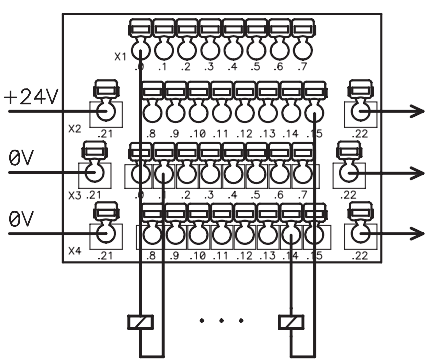


### *ricos* 8I 8I/O and *ricos* COM 8I 8I/O

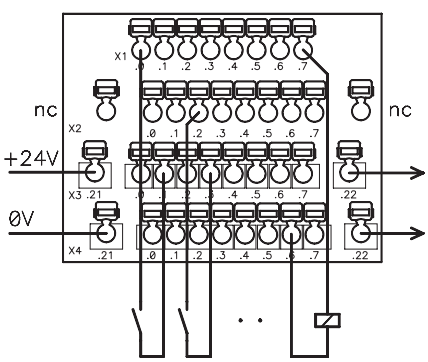


### *ricos* COM-S

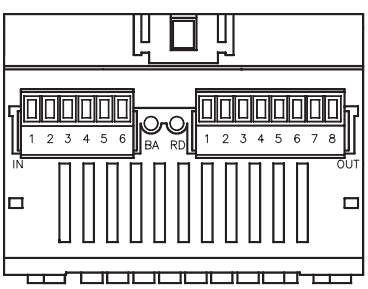


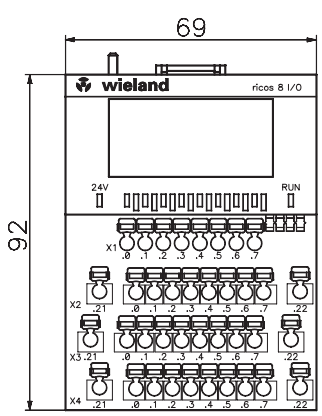


### Derating

Total current

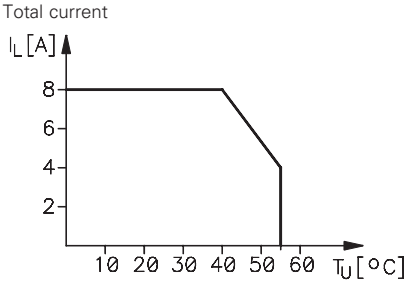


### *ricos* COM CAN DN
### *ricos* COM CANopen

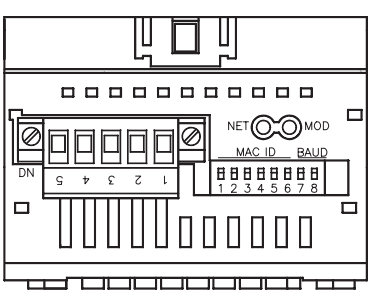


electronics

## Wiring diagrams of binary modules

### *ricos* 4I 115 V

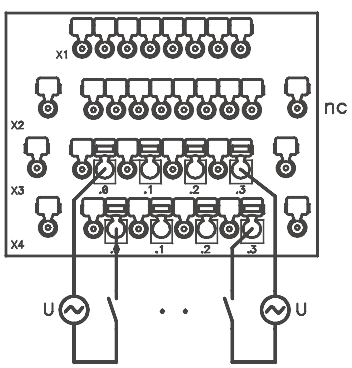


### *ricos* 4I 230 V

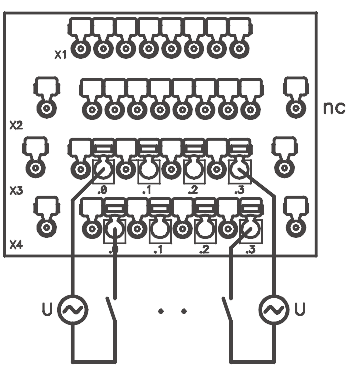


### *ricos* 4O RELAY

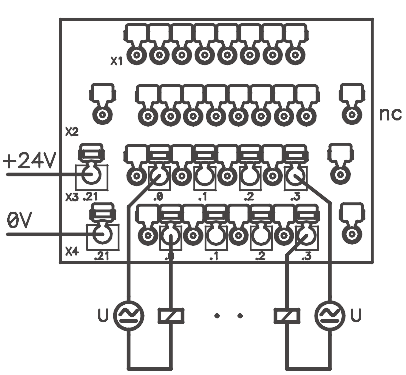


### *ricos* 8O DC 2 A

**in preparation**

### *ricos* 8O NEG

**in preparation**



Specifications are subject to change without notice

ricos

## Wiring diagrams of analog modules

***ricos* 4AI/0...10 V**
***ricos* 4 AI/±10 V**
***ricos* 4AI/0...20 mA**

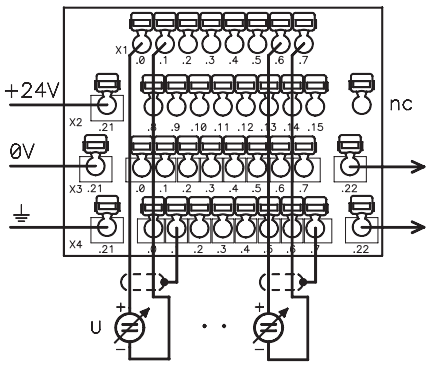


***ricos* 4AI4AO/0...10 V**
***ricos* 4AI4AO/±10 V**
***ricos* 4AI4AO/0...20 mA**
***ricos* 4AI4AO/4...20 mA**

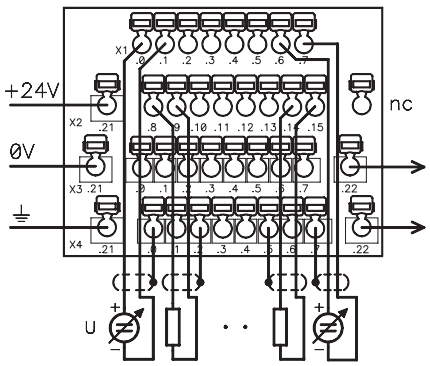


electronics

## Wiring diagrams of the counter and positioning modules

### *ricos* COUNTER

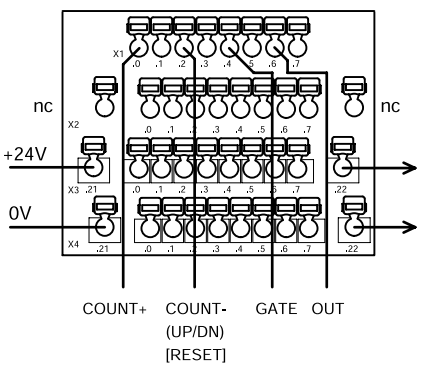


### *ricos* POSITION

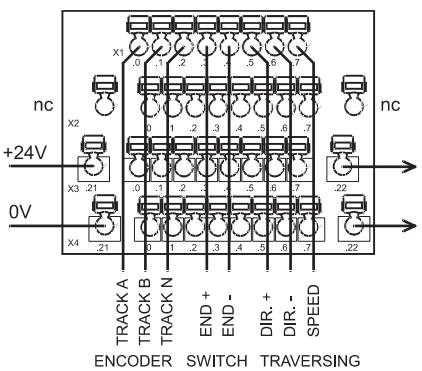


## Wiring diagrams of the PT100 and TC modules

### *ricos* 4AI Pt100

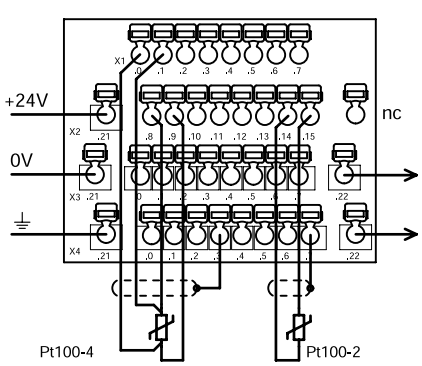


### *ricos* 4AI TC

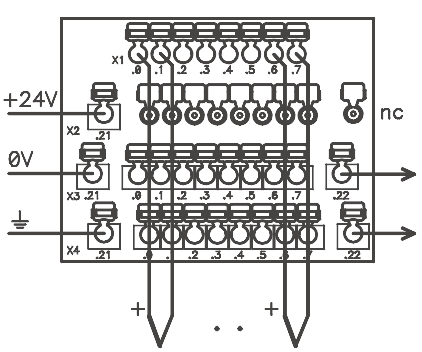




Specifications are subject to change without notice

# ricos

## *ricos* housing data

| | |
|---|---|
| Material | Makrolon 2805, Lexan 161R, Polyamid 6.0 GF20 |
| Colour | black |
| Flammability class | in accordance DIN VDE 0304 T3 (IEC 707) in accordance UL 94-V-2 |
| Resistance to creepage | in accordance DIN VDE 0303 T1/06.84 CTI = 600 |
| Thermal stability | in accordance DIN VDE 0304 20.000 h/5.000 h 100/115 °C |
| Electric strength | in accordance DIN VDE 0303 T2 (DIN 53481/>15 kV/mm) |
| Protection class | Class I in accordance IEC 536 |
| Type of protection | IP20 in accordance EN 60529 |
| Drop test | Height of fall (DIN IEC 68-2-32), with packaging |
| Shock resistance | in accordance IEC 68 Section 2, see "Drop test" |
| Relative humidity | 10...95%, no moisture condensation |
| Air pressure during operation | 860...1060 hPa |
| Insulation strip length of cables | 10 mm |
| Opening in terminal compartment | 2.4 x 1.5 mm in accordance IEC 999 |
| Mounting rail | TS35 |
| Weight | approx.190 g |



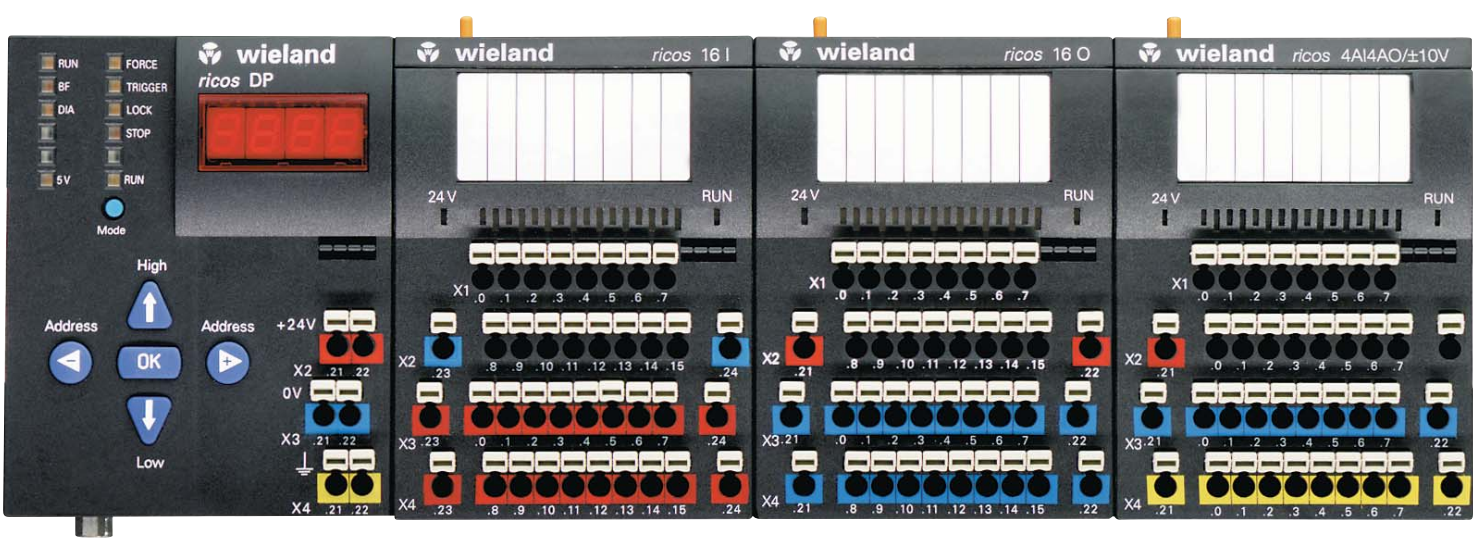

# Relay modules

relais

**Introduction to relay technology**
**Modular DIN rail mounted relays**
**Plug-in DIN rail mounted relays**
**Multiple chassis mounted relays**
**Timer relays**

The relay modules offer features such as

- Overall width of 6,2 mm
- Screw or spring-clamp connection
- Separation into input or output relays
- Multipole relay modules
- 4 kV isolation at a creepage and clearance distance of 8 mm
- Timer relay with ON delay
- Multi function time relay
- Solid state relays

All Wieland Components which require CE general certification are CE certified, and identified with the CE logo.

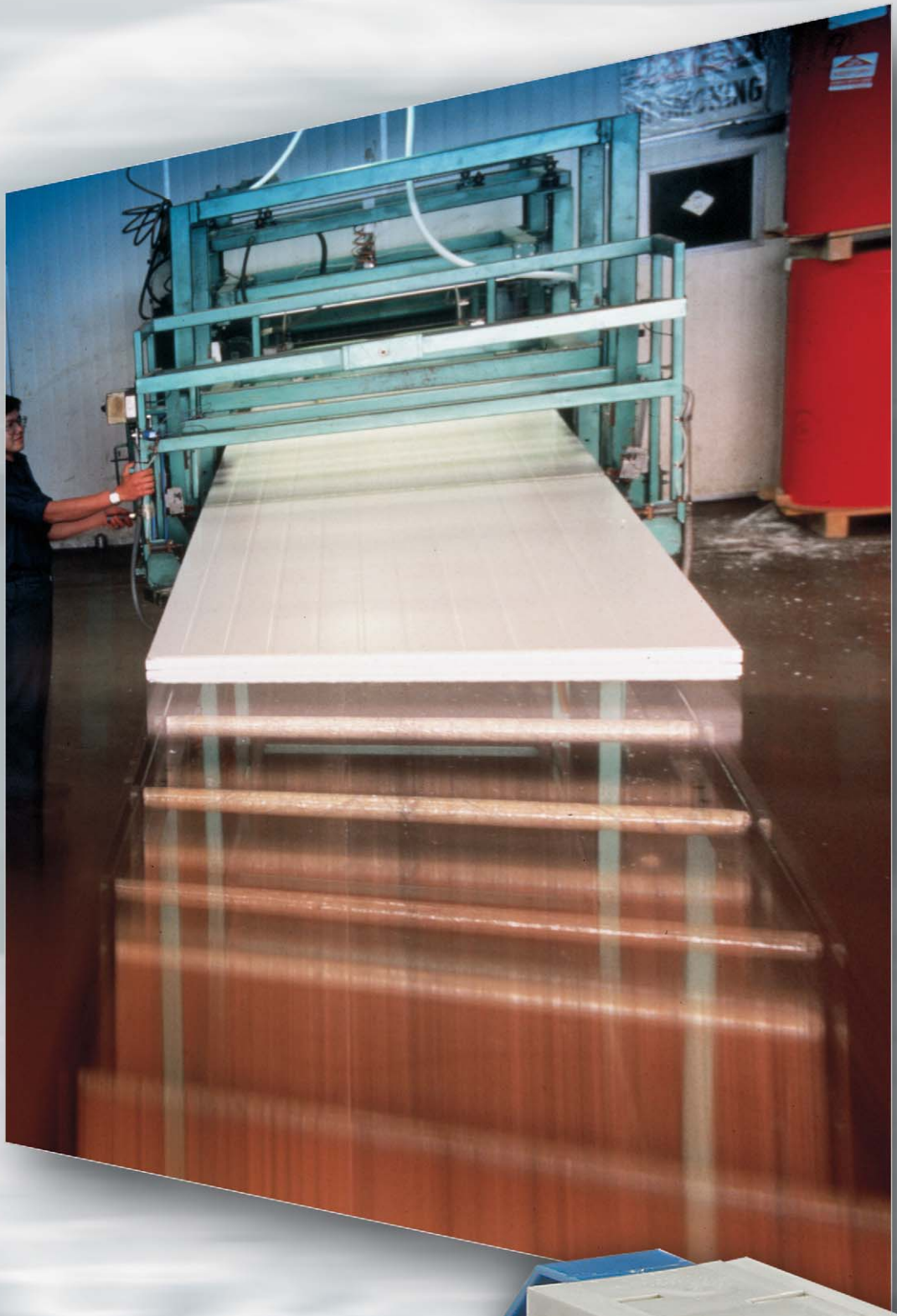

# Electronic components

## Relay modules

# Relay modules

flare

**Wieland relay modules – the reliable way to implement an application-related interface**

In the microchip age, many believed that electromechanical relays would no longer play a role. This is however far from the truth. Switching relays have reliably carried out important tasks for many years, working in a "symbiotic relationship" with the electronics. Relays have demonstrated a high degree of flexibility over the years. The core characteristics have been maintained or even improved such as:

- ❒ Overload capability without costly protection measures
- ❒ Contact rating of µA up to >10 A
- ❒ Various types and number of the contacts
- ❒ High level of insensitivity to electrical interference
- ❒ Switching without dependence on the direction of current (AC/DC) up to the GHz range
- ❒ Low level of switching power loss
- ❒ Electrical isolation between all contacts and the coil

Wieland offers a complete range of relay modules with a combination of properties outlined above. Depending on the required applications, relay modules are available with various operating voltages, contact arrangements, contact materials and housing designs. Timer relays or HAND-0-AUTO relays can be supplied in addition to relays with pure monostable functionality.

**Product range:**

***flare*** MOVE, Plug-in, process interface relay with an overall width of 6.2 mm

***flare***, Process interface relay / time relay with an overall width of 6.2 mm

***WEG***, Switching relay modules with an overall width up to 22.5 mm

***WR, WRS, RAB,*** Multiple switching relay modules with mounting base

**Overview of the technical data**

**Control side – operating voltage**

Wieland relay modules can be controlled within a defined temperature range, given operating voltage and relevant tolerance band to a 100% duty cycle.

**Control side – Suppression circuit**

AC/DC relay modules are available. DC relays are equipped with a polarised diode and a free-wheeling diode in the input. These functions are taken over by a power rectifier in the case of AC or AC/DC modules. All relay modules have an LED for status display in the input circuit.

*Suppression circuit of input for DC operation*

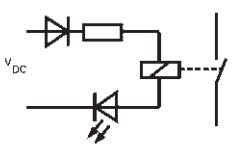


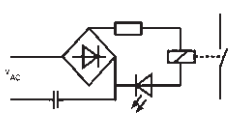


*Suppression circuit of input for AC operation*

**Control side – residual voltage**

To ensure the safe operation of the relay the residual voltage in the coil circuits must not exceed 5% DC and 15% AC of the operating voltage in accordance with VDE 0435. Values above this will result in the relay remaining closed after switch off.

Residual voltages can occur from semiconductor devices in circuit, induced voltages from high current cabling or other inductive or capacitive interference factors.

Corrective measures may involve the re-routing of cables away from interference or the parallel connection of RC elements.

**Load side – contact material**

The contacts are used to route control signals in a power range of mW up to more than 1000 VA. The contact material that is used is largely determined by the load expected during operation (particularly with regard to current carrying capacity, switching frequency, operating speed as well as any corrosive environmental influences). Wieland uses the universally accepted AgSnO contacts for power ranges up to 1500 VA. In the lower power range, the same material is used but with a gold-plated finish.

Modules with gold-flashed AgCu contacts, AgCdO or gold-plated AgNi contacts are also available. Table 1 gives an overview of other contact materials.

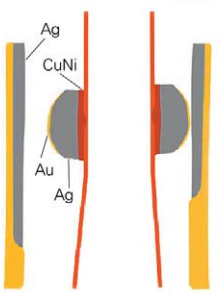


*Cut-out of a 3-layer welded contact with a linear contact closure*

| Contact material | Attacked by | | Typical properties | Typical applications | Scope |
|---|---|---|---|---|---|
| | Sulphur | Oxidisation | | | |
| Gold silver AuAg10 | no | no | Low and constant contact resistance at minimum switching capacity | Dry switching circuits, measuring circuits, unfiltered communication routes | mV…60 V<br>mA…300 mA |
| Gold nickel AuNi5 | no | slightly | Free of material transfer in broad loading ranges, small contact resistance, slight electric arcs occur at low switching capacities, higher number of operations and greater contact follow-through, interference possible due to friction oxides | Used in low and medium voltage and current ranges | 100 mV…60 V<br>1 mA…300 mA |
| Fine grained silver AgNi0,15 | yes | no | Higher mechanical strength, low welding tendency and higher arc resistance than Ag, relatively smaller contact resistance | Universal use in medium-sized loads at higher voltage than gold nickel | >12 V<br>1 mA…1 A |
| Hard silver AgCu3 | yes | when switching | Higher mechanical strength, low welding tendency and higher arc resistance than fine silver but a greater contact resistance | Used in medium-sized loads | >12 V<br>10 mA…10 A |
| Silver nickel AgNi10 | yes | no | Higher arc resistance, low welding tendency, greater contact resistance | Switching circuits for medium to high loads, d.c. circuit | >17 V<br>>5 mA |
| Silver cadmium Oxid AgCdO10 | yes | no | Low welding tendency, high arc resistance at greater switching capacities | Particularly suitable for switching inductive loads | >12 V<br>>100 mA |
| Silver tin oxide AgSnO10 | yes | no | Low welding tendency, very high arc resistance at high switching capacities, low rate of material transfer | Switching circuits with high loads during opening and closing, d.c. circuits | >17 V<br>>5 mA |
| AgNi0,15+ 5 µ Au | no | yes | Good corrosion properties, good contact resistance | Small switching capacities for dry circuits | µV…30 V<br>µA…200 mA |
| AuAg10 over AgNi+Au | no | yes | Behaves as 5 m gold contact but its resistance to wear is five times greater | Switching capacity: $10^{-6}$ W / VA up to 100 W / 1 kVA | > 100 mV<br>> 10 µA |

*Table 1: Overview of contact materials*

**Contact side – reduction of arcs**

When the arc limit voltage (see diagram) which is dependent on the switching current and contact material is exceeded, discharge processes take place on the relay contact. Material transfer occurs which damages the contact. To achieve a long service life and a high level of reliability despite this type of contact loading, circuit elements are required for arc suppression. Several options are available.

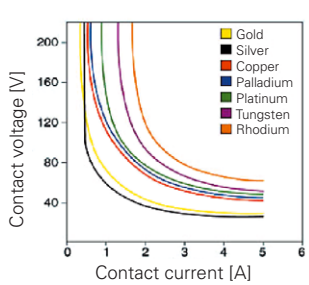


*Arc limit of pure contact metals*

**D.C. circuits with a resistive load**

An RC element which is connected in parallel to the contact can be used for arc suppression.

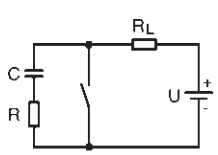


*RC element parallel*

At the point of disconnection, the voltage Uc at the contact jumps from zero to the value UxR/(R+$R_L$) and then rises according to the function $U_c$=U (1-$e^{-t/T}$) whereby t=(R+$R_L$) x C. The resistance R must be high enough so that the combined total of the condenser discharge current and the switching current at start-up is less than the maximum permitted starting current.

**R>U / ($I_{zul}$U/R)**

At a switching frequency 1/T, the capacitor should have discharged its load again before the contact is reopened. This is essentially guaranteed if **C<T/2R** has been selected.

**D.C. circuits with an inductive load**

While the maximum switching voltage U is applied when a resistive load is present at the contact, voltage peaks that are approximately 10 times as high can occur in the case of an inductive load.

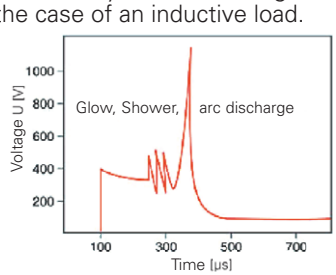


*Voltage characteristics at the relay contact for inductive loads*

To avoid harmful discharge processes, it is necessary to prevent a sudden disruption in the flow of current and simultaneously ensure that the voltage rise at the contact, which is limited by the degradation of the magnetic field, takes place at a slower rate than the opening of the contact. This counteracts the occurrence of a discharge process and an air gap is therefore created as quickly as possible after the opening of the contact whose igniting voltage far exceeds the voltage building up at the contacts. An RC element which lies parallel to the contact can also be used for this purpose.

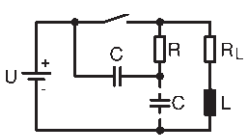


*RC element for inductive load*

When the contact opens, a charging current which is subsiding after an e function, flows into the capacitor. This slows down the absorption of the current that is flowing through the inductor and the peak value of the voltage at the contact is simultaneously reduced. The following serves as a practical, approximate value for the rating of the capacitor

**C (μF) ≅ I²/10 (A)**

where **I** represents the respective switching current. The resistance must be rated so that the combined total of the capacitor discharge current and the switching current is again less than the permitted starting current.

Another possibility is the parallel connection of an RC element to the load itself (see diagram above). This protective measure is equally effective. The disadvantage of both arrangements is the use of relatively large and therefore expensive capacitors.

### RC circuit for a.c. load

A VDR resistor (Voltage Dependent Resistor) or varistor can be connected in parallel to the load in this application in order to protect the contact. The resistance of this component is low for high voltage levels and high for low voltage levels. Varistors are therefore extremely suitable for the suppression of arcs in a.c. circuits. Table 2 gives an overview of further possibilities for arc suppression.

| Protective circuit for load | Additional dropout delay | Defined limit for induced voltage | Bipolar attenuation | Benefits / Disadvantages |
|---|---|---|---|---|
| Diode | long | yes (UD) | no | **Benefits:**<br>Simple implementation<br>Cost effective<br>Reliable<br>Non-critical dimensioning<br>Small induced voltage<br>**Disadvantages:**<br>Attenuation only via load resistance<br>Long dropout delay |
| Series-connected diode / Zener diode | medium to short | yes ($U_{ZD}$) | no | **Benefit:**<br>Non-critical dimensioning<br>**Disadvantage:**<br>Attenuation only above $U_{ZD}$ |
| Suppressor diode | medium to short | yes ($U_{ZD}$) | yes | **Benefits:**<br>Cost effective<br>Non-critical dimensioning<br>Suitable for AC voltage<br>Limit of positive peaks<br>**Disadvantage:**<br>Attenuation only above $U_{ZD}$ |
| Varistor | medium to short | yes ($U_{VDR}$) | yes | **Benefits:**<br>High absorption of energy<br>Non-critical dimensioning<br>Suitable for AC voltage<br>**Disadvantage:**<br>Attenuation only above $U_{VDR}$ |
| RC Combination | medium to short | no | yes | **Benefits:**<br>HF attenuation of stored energy<br>Suitable for AC voltage<br>Attenuation is not dependent on the level<br>**Disadvantages:**<br>Exact values required<br>High inrush current<br>Sensitive to harmonic waves |

*Table 2: Overview of protective measures on the switch output*

**Diode:**

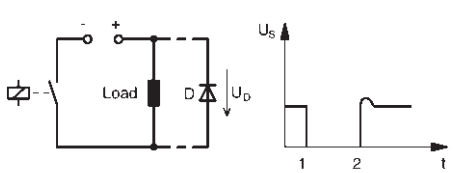


Benefit: Can be used for all capacities, low overvoltage, compact, cost-effective

Disadvantage: Very high resetting time

**Varistor:**

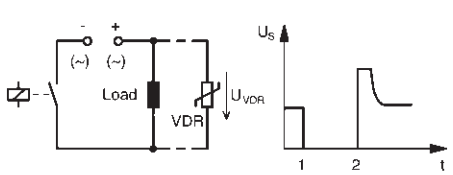


Benefit: Low resetting time, cost-effective

Disadvantage: Cannot be used for all operating voltages and capacities

**Diode and Zener diode:**

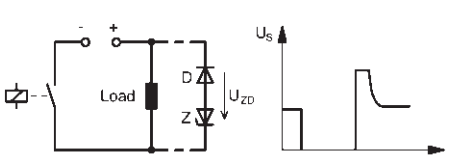


Benefit: Low overvoltage (defined by Zener diode), low resetting time

Disadvantage: Cannot be used for large capacities

**RC combination:**

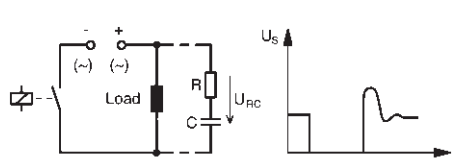


Benefit: Low overvoltage, low resetting time

Disadvantage: High current loading of the contacts at start-up, more costly and time-consuming with increased capacity

## Endurance

A distinction is made in relay modules between mechanical and electrical endurance. The mechanical endurance defines the maximum number of operating cycles without contact loading while the electrical endurance describes the switching frequency at a maximum switching capacity for resistive load. A low switching capacity increases these values considerably. The following diagram indicates the typical waveform between the switching current and endurance of a relay. Figures for each relay module is shown on the relevent catalogue data page.

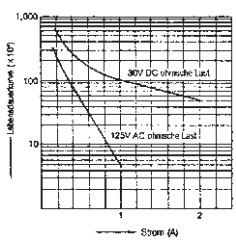


*Typical endurance curve of a relay*

## Safety separation – VDE 0106

The safety separation of coupled switching circuits in the relay modules means that the isolating voltage between the control and load circuit is retained even in the event of a mechanical failure (bent soldered pin, broken coil winding or spring). When using solid-state relays or electronic relays, this requirement is met using double or reinforced insulation. The norms DIN 50178, VDE 0106 and 109 form the basis for safety separation. VDE 0884 also applies to solid-state relays.

All Wieland modules meet these requirements.

## Timer relay modules

Wieland timer relays are electromechanical relays with an integrated time response. The time response is defined according to VDE 0435 section 201/5.83. The respective time range is either fixed or set via a DIP switch depending on the type. Fine-tuning within the time range can also be carried out via a potentiometer. An integrated LED indicates the switching state of the relay.

## Definition of the time response

### On delay

Operating voltage is applied; the relay switches to operating position after a set delay.

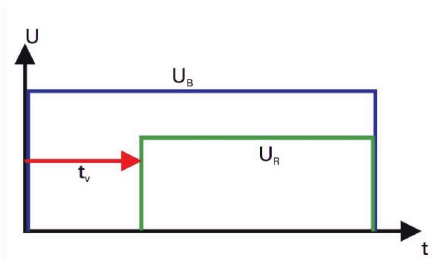


Operating voltage is applied; the relay remains in normal position

### Off delay with control voltage

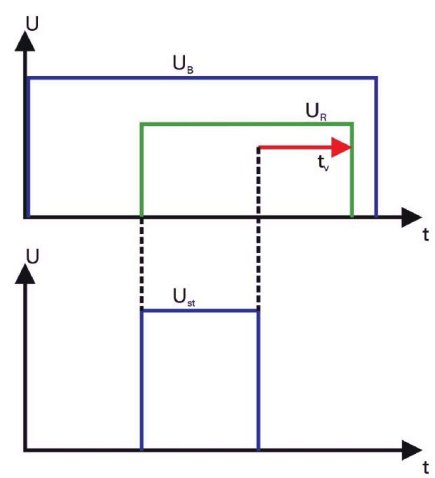


Control voltage is applied; the relay switches to operating position

Control voltage is interrupted; time delay is activated; the relay drops out after the period has elapsed.

### Single Shot

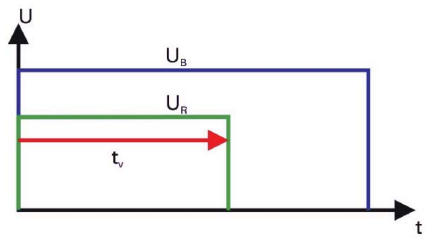


Operating voltage is applied; the relay switches to operating position and drops out after the set period

### Cycle On – "pulsing"

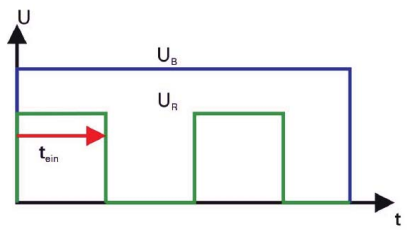


Operating voltage is applied; relay starts clock pulse operation over the set period; relationship between pulse and pause is 1:1

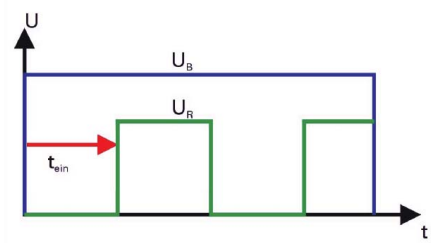


### Cycle Off – "pulsing delay"

Operating voltage is applied; relay starts clock pause operation over the set period; relationship between pulse and pause is 1:1

# Relay modules

flare

Overall width 6.2 mm
Screw or spring clamp terminal
can be selected

Dimensions (mm): W x H x D
6.2 x 89 x 70

**250 V AC / 300 V DC, 6 A**
**1 Changeover contact (SPDT)**
Approvals: UL, CSA

**48 V DC, 20 mA**
**1 Changeover contact (SPDT)**
Approvals: UL, CSA

| **Operating voltage** | Screw terminal | Spring-clamp | Std. pack | Screw terminal | Spring-clamp | Std. pack |
|---|---|---|---|---|---|---|
| **12 V DC** | | 80.010.4106.0 | 10 | | | |
| **24 V DC** | 80.010.4000.0 | 80.010.4100.0 | 10 | | | |
| **12 V AC/DC** | | | | | | |
| **24 V AC/DC** | | | | 80.010.4005.0 | 80.010.4105.0 | 10 |
| | | | | | | |
| **115 V AC** | | 80.010.4131.0 | 10 | | | |
| **230 V AC** | | 80.010.4141.0 | 10 | | | |
| | | | | | | |
| **Wiring diagram, derating curve, limit curve** | **See pages 464-465** | | | **See pages 464-465** | | |
| **Coil circuit** | | | | | | |
| Operating voltage | **12 V DC** | **24 V DC** | **115 V DC** | **230 V DC** | | |
| Range of voltage | UB +25 %/–20 % | | | | UB +25 %/–20 % | |
| Nominal input current | 18 mA | ca. 14 mA | 3.9 mA | 3 mA | ca. 14 mA | |
| Nominal input capacity | 0.22 W | ca. 0.35 W | 0.48 W | 0.65 W | ca. 0.35 W | |
| Holding current at 20 °C | ≥ 2.3 mA | > 1.2 mA | ≥ 0.6 mA | ≥ 0.3 mA | > 1.2 mA | |
| Connectable via plug-in jumper | Up to 50 modules | | | | Up to 50 modules | |
| Status display | LED Green | | | | LED Green | |
| **Switching characteristics** | | | | | | |
| Maximum switching voltage | 250 V AC / 300 V DC | | | | 48 V DC | |
| Maximum switching current | 6 A AC / 2 A DC | | | | 20 mA | |
| Maximum switching capacity | 1500 VA / 48 W | | | | 1 W | |
| Maximum starting current | 10 A; 4 sec. | | | | | |
| Pickup/dropout delay | 8 ms / 10 ms | | | | 8 ms / 10 ms | |
| Chatter time | 2 ms | | | | 2 ms | |
| Maximum switching frequency | 20 Hz | | | | 20 Hz | |
| Contact material | $AgSnO_2$ | | | | $AgSnO_2$ + 3µ Au | |
| Minimum switchable voltage | 12 V | | | | 5 V | |
| Minimum switchable current | 5 mA | | | | 1 mA | |
| Mechanical endurance | $2 \times 10^7$ | | | | $2 \times 10^7$ | |
| Electrical endurance 24 V DC / 2 A | $6 \times 10^5$ | | | | $6 \times 10^5$ | |
| Electrical endurance 230 V AC / 6 A | $8 \times 10^4$ | | | | $8 \times 10^4$ | |
| Rated voltage | | | | | | |
| Isolation voltage of input/output | 4 $kV_{eff.}$ | | | | 4 $kV_{eff.}$ | |
| Overvoltage category | III (according to HD 625.1S1) | | | | III (according to HD 625.1S1) | |
| Degree of pollution | 2 (according to HD 625.1S1) | | | | 2 (according to HD 625.1S1) | |
| Ambient temperature | 0 °C...+50 °C | | | | 0 °C...+50 °C | |
| Storage temperature | –40 °C...+55 °C | | | | –40 °C...+55 °C | |
| Protection type/mounting rail | IP 20 / TS35 | | | | IP 20 / TS35 | |
| Norms/specifications | VDE 0160; VDE 0106 T101 | | | | VDE 0160; VDE 0106 T101 | |
| Emitted interference/interference immunity | EN 61000-6-3; EN 61000-6-2 | | | | EN 61000-6-3; EN 61000-6-2 | |
| Wire range of screw terminal/spring clamp terminal | 24 – 10 AWG / 24 – 12 AWG | | | | 24 – 10 AWG / 24 – 12 AWG | |
| finely stranded | 0.14 $mm^2$ – 1.5 $mm^2$ | | | | 0.14 $mm^2$ – 1.5 $mm^2$ | |
| single core | 0.5 $mm^2$ – 2.5 $mm^2$ | | | | 0.5 $mm^2$ – 2.5 $mm^2$ | |
| | | | | | | |
| CSA EX approval | Class I, Division 2, Groups A, B, C and D, T6 | | | | Class I, Division 2, Groups A, B, C and D, T6 | |
| **Accessories** | | | | | | |
| Plug-in jumper ($U_{max}$ = 50 V, $I_{max}$ = 2 A) | Z8.000.0200.8 | | | | Z8.000.0200.8 | |
| 8 digit marker tag, unmarked, 60 off | Z4.242.5153.0 | | | | Z4.242.5153.0 | |
| Comb for potential distribution, red/blue* | Z8.000.0202.3 / Z8.000.0202.4 | | | | Z8.000.0202.3 / Z8.000.0202.4 | |
| End caps for comb red/blue | Z8.000.0202.1 / Z8.000.0202.2 | | | | Z8.000.0202.1 / Z8.000.0202.2 | |
| * for screw terminals only | | | | | | |



Subject to change without further notice

# flare

Overall width 12.4 mm
Spring clamp

Dimensions (mm): W x H x D
6.2 x 89 x 70

**250 V AC / 300 V DC, 6 A (DPDT)**
**2 Changeover contacts**
Approvals: UL, CSA

| **Operating voltage** | Screw terminal | Spring-clamp | Std. pack |
|---|---|---|---|
| **12 V DC** | | | |
| **24 V DC** | | 80.010.4103.0 | 10 |
| **12 V AC/DC** | | | |
| **24 V AC/DC** | | | |
| | | | |
| **115 V AC** | | | |
| **230 V AC** | | | |
| | | | |
| **Wiring diagram, derating curve, limit curve** | **See pages 464-465** | | |
| **Coil circuit** | | | |
| Operating voltage | UB +25 %/–20 % | | |
| Nominal input current | ca. 14 mA | | |
| Nominal input capacity | ca. 0.35 W | | |
| Holding current at 20 °C | > 1.2 mA | | |
| Connectable via plug-in jumper | Up to 50 modules | | |
| Status display | LED Green | | |
| | | | |
| **Switching characteristics** | | | |
| Maximum switching voltage | 250 V AC / 300 V DC | | |
| Maximum switching current | 6 A AC / 2 A DC | | |
| Maximum switching capacity | 1500 VA / 48 W | | |
| Maximum starting current | 10 A; 4 sec. | | |
| Pickup/dropout delay | 8 ms / 10 ms | | |
| Chatter time | 2 ms | | |
| Maximum switching frequency | 20 Hz | | |
| Contact material | $AgSnO_2$ | | |
| Minimum switchable voltage | 24 V | | |
| Minimum switchable current | 5 mA | | |
| Mechanical endurance | $2 \times 10^7$ | | |
| Electrical endurance 24 V DC / 2 A | $6 \times 10^5$ | | |
| Electrical endurance 230 V AC / 6 A | $8 \times 10^4$ | | |
| Rated voltage | | | |
| Isolation voltage of input/output | 4 $kV_{eff.}$ | | |
| overvoltage category | III (according to HD 625.1S1) | | |
| Degree of pollution | 2 (according to HD 625.1S1) | | |
| Ambient temperature | 0 °C...+50 °C | | |
| Storage temperature | –40 °C...+55 °C | | |
| Protection type/mounting rail | IP 20 / TS35 | | |
| Norms/specifications | VDE 0160; VDE 0106 T101 | | |
| Emitted interference/interference immunity | EN 61000-6-3; EN 61000-6-2 | | |
| Wire range of screw terminal/spring clamp terminal | 24 – 10 AWG / 24 – 12 AWG | | |
| finely stranded | 0.14 $mm^2$ – 1.5 $mm^2$ | | |
| single core | 0.5 $mm^2$ – 2.5 $mm^2$ | | |
| | | | |
| | | | |
| | | | |
| **Accessories** | | | |
| Plug-in jumper ($U_{max}$ = 50 V, $I_{max}$ = 2 A) | | Z8.000.0200.8 | |
| 8 digit marker tag, unmarked, 60 off | | Z4.242.5153.0 | |
| | | | |
| | | | |

electronics

# Relay modules
## Plug-in relays
## flare MOVE

Overall width: 6.2 mm
plug-in relay, screw clamp

Dimensions (mm): W x H x D
6.2 x 88 x 76

| | **Coil voltage 12 V DC / Output 250 V AC / 6 A /1 Changeover contact (SPDT)** | | **Coil voltage 24 V DC/ Output 250 V AC / 6 A/1 Changeover contact (SPDT)** | |
|---|---|---|---|---|
| **Operating voltage** | $AgSnO_2$ | $AgSnO_2$ + Au (5 µ)VPE | $AgSnO_2$ | $AgSnO_2$ + Au (5 µ) VPE |
| **12 V DC Relays c/w Base** | 80.010.4501.0 | 80.010.4501.1 10 | | |
| **24 V DC Relays c/w Base** | | | 80.010.4502.0 | 80.010.4502.1 10 |
| | | | | |
| | | | | |
| **Coil circuit** (identical for both types of contact material) | | | | |
| Nominal operating voltage | 12 V DC | 12 V AC/DC | 24 V DC | 24 V AC/DC |
| Maximum operating voltage | 16.8 V DC | 16.8 V DC | 33.6 V DC | 33.6 V DC |
| Minimum operating voltage | 8.4 V DC | 9.1 V DC | 16.8 V DC | 18.2 V DC |
| Nominal input current | 15.2 mA | 15.2 mA | 9.4 mA | 9.4 mA |
| Nominal input capacity AC/DC | 0.2 W | 0.25 VA | 0.23 W | 0.3 VA |
| Operating range | (0.7...2.2) $U_N$ | (0.85...1.1) $U_N$ | (0.7...2.2) $U_N$ | (0.85...1.1) $U_N$ |
| Connectable via plug-in jumper | Up to 20 modules | | Up to 20 modules | |
| Status display | LED Green | | LED Green | |
| **Switching characteristics** | **$AgSnO_2$** | **$AgSnO_2$ + Au (5 µ)** | **$AgSnO_2$** | **$AgSnO_2$ + Au (5 µ)** |
| Maximum switching voltage | 400 V AC | | 400 V AC | |
| Nominal switching voltage | 250 V AC | | 250 V AC | |
| Maximum switching current | | 6 A AC/DC | | 6 A AC/DC |
| Maximum switching capacity | | 1500 VA / 150 W | | 1500 VA / 150 W |
| Maximum starting current | | 30 A (0.5 sec.) | | 30 A (0,5 sec.) |
| Pickup/dropout delay (including chatter) | 7 ms / 11 ms | | 7 ms / 11 ms | |
| Maximum switching frequency | 20 Hz (without load); 0,1 Hz (at full load) | | 20 Hz (without load); 0.1 Hz (at full load) | |
| Contact material | $AgSnO_2$ | $AgSnO_2$ + Au (5 µm) | $AgSnO_2$ | $AgSnO_2$ + Au (5 µm) |
| Minimum switchable voltage | 12 V AC/DC | 5 V AC/DC | 12 V AC/DC | 5 V AC/DC |
| Minimum switchable current | 10 mA AC/DC | 2 mA AC/DC | 10 mA AC/DC | 2 mA AC/DC |
| Minimum switching capacity | 500 mW | 50 mW | 500 mW | 50 mW |
| Mechanical endurance | $1 \times 10^7$ | | $1 \times 10^7$ | |
| Electrical endurance 230 V AC / 6 A | $6 \times 10^4$ | | $6 \times 10^4$ | |
| Rated voltage | 250 V | | 250 V | |
| Isolation voltage of input/output | 4 $kV_{eff.}$ | | 4 $kV_{eff.}$ | |
| Overvoltage category | III (according to HD 625.1S1) | | III (according to HD 625.1S1) | |
| Degree of pollution | 2 (according to HD 625.1S1) | | 2 (according to HD 625.1S1) | |
| Ambient temperature | 0 °C...+50 °C | | 0 °C...+50 °C | |
| Storage temperature | -40 °C...+55 °C | | –40 °C...+55 °C | |
| Protection type/mounting rail | IP 20 / TS35 | | IP 20 / TS35 | |
| Norms/specifications | | | | |
| Wire range of screw terminal: | 24 – 12 AWG | | 24 – 12 AWG | |
| finely stranded/single core | 0.14 $mm^2$–1.5 $mm^2$ / 0.5 $mm^2$–2.5 $mm^2$ | | 0.14 $mm^2$–1.5 $mm^2$ / 0.5 $mm^2$–2.5 $mm^2$ | |
| | | | | |
| | | | | |
| **Accessories** | **Relay type** | Part no. Std. pack | **Relay-Type** | Part no. Std. pack |
| Relay 12 V DC | $AgSnO_2$ | 80.063.4031.0 10 | $AgSnO_2$ | 80.063.4031.0 10 |
| Relay 12 V DC | $AgSnO_2$ + Au (5 µ) | 80.063.4031.1 10 | $AgSnO_2$ + Au (5 µ) | 80.063.4031.1 10 |
| Relay 24 V DC | $AgSnO_2$ | 80.063.4032.0 10 | $AgSnO_2$ | 80.063.4032.0 10 |
| Relay 24 V DC | $AgSnO_2$ + Au (5 µ) | 80.063.4032.1 10 | $AgSnO_2$ + Au (5 µ) | 80.063.4032.1 10 |
| | | | | |
| Insulating plate | IP SF38 | 80.063.4009.1 | IP SF38 | 80.063.4009.1 |
| Comb-shaped jumper, continuous current 36 A | KB SF38 | 80.063.4029.3 | KB SF38 | 80.063.4029.3 |
| Marker tag (plastic, white) | BZ SF38 | 80.063.4029.3 | BZ SF38 | 80.063.4029.3 |
| Labelling mat | BM SF38 | 80.063.4129.3 | BM SF38 | 80.063.4129.3 |
| | | | | |
| | | | | |
| | | | | |



Subject to change without further notice

# flare MOVE

Overall width: 6.2 mm
plug-in relay, screw clamp

Dimensions (mm): W x H x D
6.2 x 88 x 76

| | Coil voltage 110 V AC/DC / Output 250 V AC / 6 A /1 Changeover contact (SPDT) | | Coil voltage 230 V AC/DC/Output 250 V AC / 6 A/1 Changeover contact (SPDT) | |
|---|---|---|---|---|
| **Operating voltage** | $AgSnO_2$ | $AgSnO_2$ + Au (5 µ) | $AgSnO_2$ | $AgSnO_2$ + Au (5 µ) |
| **110 V AC/DC Relay c/w Base** | 80.010.4525.0 | 80.010.4525.1 | | |
| **230 V AC/DC Relay c/w Base** | | | 80.010.4526.0 | 80.010.4526.1 |
| | | | | |
| | | | | |
| | | | | |
| **Coil circuit** | | | | |
| Nominal operating voltage | 110 V AC/DC (50/60 Hz) | | 230 V AC/DC (50/60 Hz) | |
| Maximum operating voltage | 132 V AC | | 255 V AC | |
| Minimum operating voltage | 83.5 V AC | | 175 V AC | |
| Nominal input current | 3.1 mA | | 3.1 mA | |
| Nominal input capacity AC/DC | 0.6 VA | | 0,9 VA | |
| Operating range | (0.85...1.1) $U_N$ | | (0.85...1.1) $U_N$ | |
| Connectable via a plug-in jumper | Up to 20 modules | | Up to 20 modules | |
| Status display | LED Green | | LED Green | |
| **Switching characteristics** | **$AgSnO_2$** | **$AgSnO_2$ + Au (5 µ)** | **$AgSnO_2$** | **$AgSnO_2$ + Au (5 µ)** |
| Maximum switching voltage | 400 V AC | | 400 V AC | |
| Nominal switching voltage | 250 V AC | | 250 V AC | |
| Maximum switching current | | 6 A AC/DC | | 6 A AC/DC |
| Maximum switching capacity | | 1500 VA / 150 W | | 1500 VA / 150 W |
| Maximum starting current | | 30 A (0.5 sec.) | | 30 A (0.5 sec.) |
| Pickup/dropout delay (including chatter) | 7 ms / 11 ms | | 7 ms / 11 ms | |
| Maximum switching frequency | 20 Hz (without load); 0.1 Hz (at full load) | | 20 Hz (without load); 0.1 Hz (at full load) | |
| Contact material | $AgSnO_2$ | $AgSnO_2$ + Au (5 µm) | $AgSnO_2$ | $AgSnO_2$ + Au (5 µm) |
| Minimum switchable voltage | 12 V AC/DC | 5 V AC/DC | 12 V AC/DC | 5 V AC/DC |
| Minimum switchable current | 10 mA AC/DC | 2 mA AC/DC | 10 mA AC/DC | 2 mA AC/DC |
| Minimum switching capacity | 500 mW | 50 mW | 500 mW | 50 mW |
| Mechanical endurance | $1 \times 10^7$ | | $1 \times 10^7$ | |
| Electrical endurance 230 V AC / 6 A | $6 \times 10^4$ | | $6 \times 10^4$ | |
| Rated voltage | 250 V | | 250 V | |
| Isolation voltage of input/output | 4 $kV_{eff.}$ | | 4 $kV_{eff.}$ | |
| Overvoltage category | III (according to HD 625.1S1) | | III (according to HD 625.1S1) | |
| Degree of pollution | 2 (according to HD 625.1S1) | | 2 (according to HD 625.1S1) | |
| Ambient temperature | 0 °C...+50 °C | | 0 °C...+50 °C | |
| Storage temperature | –40 °C...+55 °C | | –40 °C...+55 °C | |
| Protection type/mounting rail | IP 20 / TS35 | | IP 20 / TS35 | |
| Norms/specifications | | | | |
| Wire range of screw terminal: | | | | |
| finely stranded/single core | 0.14 $mm^2$ – 1.5 $mm^2$ / 0.5 $mm^2$ – 2.5 $mm^2$ 24 – 12 AWG | | 0.14 $mm^2$ – 1.5 $mm^2$ / 0.5 $mm^2$ – 2.5 $mm^2$ 24 – 12 AWG | |
| | | | | |
| | | | | |
| **Accessories** | **Relay-Type** | Part no. Std. pack | **Relay-Type** | Part no. Std. pack |
| Relay 110 V AC/DC | $AgSnO_2$ | 80.063.4034.0 10 | $AgSnO_2$ | 80.063.4034.0 10 |
| Relay 110 V AC/DC | $AgSnO_2$ + Au (5 µ) | 80.063.4034.1 10 | $AgSnO_2$ + Au (5 µ) | 80.063.4034.1 10 |
| Relay 230 V AC/DC | $AgSnO_2$ | 80.063.4026.0 10 | $AgSnO_2$ | 80.063.4026.0 10 |
| Relay 230 V AC/DC | $AgSnO_2$ + Au (5 µ) | 80.063.4026.1 10 | $AgSnO_2$ + Au (5 µ) | 80.063.4026.1 10 |
| | | | | |
| Insulating plate | IP SF38 | 80.063.4009.1 | IP SF38 | 80.063.4009.1 |
| Comb-shaped jumper, continuous current 36 A | KB SF38 | 80.063.4029.3 | KB SF38 | 80.063.4029.3 |
| Marker tag (plastic, white) | BZ SF38 | 80.063.4029.3 | BZ SF38 | 80.063.4029.3 |
| Labelling mat | BM SF38 | 80.063.4129.3 | BM SF38 | 80.063.4129.3 |
| | | | | |
| | | | | |

# Relay modules

flare

Overall width 6.2 mm
For input/output seperation

Dimensions (mm): W x H x D
6.2 x 89 x 70

| | **Isolating blade terminal relay (SPDT) Change over 1 contact**<br>Approvals: Ⓤ,CSA | | | **Hand-O-Auto relay (SPDT) 1 make contact**<br>Approvals: : Ⓤ, CSA | | |
|---|---|---|---|---|---|---|
| **Operating voltage** | Screw terminal | Spring-clamp | Std. pack | Screw terminal | Spring-clamp | Std. pack |
| **12 V DC** | | | | | | |
| **24 V DC** | | | | | | |
| **12 V AC/DC** | | | | | | |
| **24 V AC/DC** | | 80.010.4120.0 | 10 | | 80.010.4101.0 | 10 |
| | | | | | | |
| **115 V AC** | | | | | | |
| **230 V AC** | | | | | | |
| | | | | | | |
| **Wiring diagram, derating curve, limit curve** | **See pages 464-465** | | | **See pages 464-465** | | |
| **Coil circuit** | | | | | | |
| Operating voltage | UB +25 %/–20 % | | | UB +25 %/–20 % | | |
| Nominal input current | ca. 14 mA | | | ca. 14 mA | | |
| Nominal input capacity | ca. 0.35 W | | | ca. 0.35 W | | |
| Holding current at 20 °C | > 1.2 mA | | | > 1.2 mA | | |
| Connectable via plug-in jumper | Up to 50 modules | | | Up to 50 modules | | |
| Status display | LED Green | | | LED Green | | |
| **Switching characteristics** | | | | | | |
| Maximum switching voltage | 250 V AC / 300 V DC | | | 250 V AC / 300 V DC | | |
| Maximum switching current | 6 A AC / 2 A DC | | | 6 A AC / 2 A DC | | |
| Maximum switching capacity | 1500 VA / 48 W | | | 1500 VA / 48 W | | |
| Maximum starting current | 10 A; 4 sec. | | | 10 A; 4 sec. | | |
| Pickup/dropout delay | 8 ms / 10 ms | | | 8 ms / 10 ms | | |
| Chatter time | 2 ms | | | 2 ms | | |
| Maximum switching frequency | 20 Hz | | | 20 Hz | | |
| Contact material | $AgSnO_2$ | | | $AgSnO_2$ | | |
| Minimum switchable voltage | 12 V | | | 12 V | | |
| Minimum switchable current | 5 mA | | | 5 mA | | |
| Mechanical endurance | $2 \times 10^7$ | | | $2 \times 10^7$ | | |
| Electrical endurance 24 V DC / 2 A | $6 \times 10^5$ | | | $6 \times 10^5$ | | |
| Electrical endurance 230 V AC / 6 A | $8 \times 10^4$ | | | $8 \times 10^4$ | | |
| Rated voltage | | | | | | |
| Isolation voltage of input/output | 4 $kV_{eff.}$ | | | 4 $kV_{eff.}$ | | |
| Overvoltage category | III (according to HD 625.1S1) | | | III (according to HD 625.1S1) | | |
| Degree of pollution | 2 (according to HD 625.1S1) | | | 2 (according to HD 625.1S1) | | |
| Ambient temperature | 0 °C...+50 °C | | | 0 °C...+50 °C | | |
| Storage temperature | –40 °C...+55 °C | | | –40 °C...+55 °C | | |
| Protection type/mounting rail | IP 20 / TS35 | | | IP 20 / TS35 | | |
| Norms/specifications | VDE 0160; VDE 0106 T101 | | | VDE 0160; VDE 0106 T101 | | |
| Emitted interference/interference immunity | EN 61000-6-3; EN 61000-6-2 | | | EN 61000-6-3; EN 61000-6-2 | | |
| Wire range of screw terminal | – | | | – | | |
| Wire range of spring clamp terminal | 24 – 12 AWG | | | 24 – 12 AWG | | |
| finely stranded | 0.14 $mm^2$ – 1.5 $mm^2$ | | | 0.14 $mm^2$ – 1.5 $mm^2$ | | |
| single core | 0.5 $mm^2$ – 2.5 $mm^2$ | | | 0.5 $mm^2$ – 2.5 $mm^2$ | | |
| | | | | | | |
| CSA EX approval in range | Class I, Division 2, Groups A, B, C and D, T6 | | | Class I, Division 2, Groups A, B, C and D, T6 | | |
| | | | | | | |
| **Accessories** | | | | | | |
| Plug-in jumper ($U_{max.}$ = 50 V, $I_{max.}$ = 2 A) | Z8.000.0200.8 | | | Z8.000.0200.8 | | |
| 8 digit marker tag, unmarked, 60 off | Z4.242.5153.0 | | | Z4.242.5153.0 | | |
| Comb for potential distribution, red/blue | Z8.000.0202.3 / Z8.000.0202.4 | | | Z8.000.0202.3 / Z8.000.0202.4 | | |
| End caps for comb, red/blue | Z8.000.0202.1 / Z8.000.0202.2 | | | Z8.000.0202.1 / Z8.000.0202.2 | | |



Subject to change without further notice

# Relay modules
# Operating voltage: 24 V / 48 V

WEG

Overall width 20mm & 22.5mm
Screw clamp

**250 V AC / 125 V DC, 3 A (SPST, N.O.)**
**1 Make contact**

**250 V AC / 250 V DC, 5 A (SPDT)**
**1 Changeover contact**
Approvals:

Dimensions (mm): W x H x D

22.5 x 58 x 90.5

| **Operating voltage** | Type | Part no. | Std. pack | Type | Part no. | Std. pack |
|---|---|---|---|---|---|---|
| **24 V AC/DC** | WEG-REL-1S-250V3A | 57.800.0053.0 | 1 | WEG-REL-1W-250V5A | 57.800.5053.0 | 1 |
| **48 V AC/DC** | | | | WEG-REL-1W-250V5A | 57.800.5053.0 | 1 |
| | | | | | | |
| **115 V AC/DC** | | | | | | |
| **230 V AC** | | | | | | |
| | | | | | | |
| | | | | | | |
| **Wiring diagram, derating curve, limit curve** | **See pages 466-467** | | | **See pages 466-467** | | |
| **Coil circuit** | | | | | | |
| Operating voltage | 22 V AC/DC | | | 24 V AC/DC ±10% | 48 V AC/DC ±10% | |
| Nominal input current | 22 mA AC / 14 mA DC | | | 27 mA AC / 17 mA DC | 21 mA AC / 18 mA DC | |
| Nominal input capacity | 0.54 VA / 0.34 W | | | 0.65 VA / 0,4 W | 1.0 VA / 0,85 W | |
| Holding current at 20 °C | 5.5 mA AC / 2.6 mA DC | | | 7.4 mA AC / 3.5 mA DC | 5.7 mA AC / 3.5 mA DC | |
| **Switching characteristics** | | | | | | |
| Maximum switching voltage | 250 V AC / 125 V DC[1)] | | | 250 V AC / 250 V DC[1)] | | |
| Maximum starting current | 3 A AC/DC[1)] | | | 5 A AC/DC[1)] | | |
| Maximum switching capacity | 1200 V A / 120 W[1)] | | | 2000 V A / 100 W[1)] | | |
| Maximum continous current | 16 A (25 ms) | | | 16 A AC (max. 4 s, 10% ED) | | |
| Pickup/dropout delay approx. | 8.5 ms / 16 ms | | | 9.4 ms / 17.6 ms | | |
| Chatter time | 2 ms | | | 3 ms | | |
| Maximum switching frequency | | | | | | |
| Contact material | AgNi 0,15 + 1 µ Au | | | AgNi 0.15 + 0.2 µ Au | | |
| Minimum switchable voltage | 80 mV | | | 12 V DC | | |
| Minimum switchable current | 50 µA | | | 10 mA | | |
| Mechanical endurance | > 20 x $10^6$ | | | > 20 x $10^6$ | | |
| Electrical endurance at 24 V DC / 1 A | > 6 x $10^5$ | | | > 6 x $10^6$ | | |
| Electrical endurance at 230 V AC / 3 A | > 1 x $10^5$ | | | > 7 x $10^5$ | | |
| Rated voltage | | | | | | |
| Isolation voltage of input/output | 2 $kV_{eff.}$ | | | 2 $kV_{eff.}$ | | |
| Overvoltage category | | | | | | |
| Degree of pollution | | | | | | |
| Ambient temperature | –25 °C...Derating | | | –25 °C...Derating | | |
| Storage temperature | –40 °C...+85°C | | | –40 °C...+85°C | | |
| Protection type/mounting rail | IP 20/TS 32 or TS35 | | | IP 20/TS 32 or TS 35 | | |
| Norms/specifications | | | | | | |
| Emitted interference/interference immunity | | | | | | |
| Wire range, finely stranded/single core | 0.14 $mm^2$ – 4 $mm^2$ / 0.14 $mm^2$ – 6 $mm^2$ / 20 – 10 AWG | | | 0.14 $mm^2$ – 4 $mm^2$ / 0.14 $mm^2$ – 6 $mm^2$ / 20 – 10 AWG | | |
| Location of mounting rail | horizontal | | | horizontal | | |
| | | | | | | |
| **Accessories** | | | | | | |
| | | | | | | |
| | | | | | | |
| | | | | | | |
| | | | | | | |
| [1)] see limit curve on page 465 | | | | | | |
| | | | | | | |
| | | | | | | |
| | | | | | | |
| | | | | | | |
| | | | | | | |



Subject to change without further notice

# WEG

Overall width 22.5mm
Screw clamp

**250 V AC / 250 V DC 4 A (DPDT)**
**2 Changeover contact**
Approvals:

Dimensions (mm): W x H x D
22.5 x 58 x 90.5

| **Operating voltage** | Type | Part no. | Std. pack |
|---|---|---|---|
| **24 V AC/DC** | WEG-REL-2W-250V5A | 57.800.7053.0 | 1 |
| **48 V AC/DC** | | | |
| | | | |
| **115 V AC/DC** | | | |
| **230 V AC** | | | |
| | | | |
| | | | |
| **Wiring diagram, derating curve, limit curve** | **See pages 466-467** | | |
| **Coil circuit** | | | |
| Operating voltage | 22 V AC/DC | | |
| Nominal input current | 31 mA AC / 29 mA DC | | |
| Nominal input capacity | 0.75 VA / 0.7 W | | |
| Holding current at 20 °C | 4.7 mA AC / 3.6 mA DC | | |
| **Switching characteristics** | | | |
| Maximum switching voltage | 250 V AC / 250 V DC[1)] | | |
| Maximum starting current | 4 A AC/DC[1)] | | |
| Maximum switching capacity | 1100 V A / 140 W[1)] | | |
| Maximum continous current | 15 A AC (200 ms) | | |
| Pickup/dropout delay approx. | 16 ms / 20 ms | | |
| Chatter time | 3 ms | | |
| Maximum switching frequency | | | |
| Contact material | $AgCu_3$ + 0,2 µ Au | | |
| Minimum switchable voltage | 12 V DC | | |
| Minimum switchable current | 10 mA | | |
| Mechanical endurance | > 3 x $10^7$ | | |
| Electrical endurance at 24 V DC / 1 A | > 2 x $10^6$ | | |
| Electrical endurance at 230 V AC / 3 A | > 6 x $10^5$ | | |
| Rated voltage | | | |
| Isolation voltage of input/output | 2 $kV_{eff.}$ | | |
| Overvoltage category | | | |
| Degree of pollution | | | |
| Ambient temperature | –25 °C...Derating | | |
| Storage temperature | –40 °C...+85 °C | | |
| Protection type/mounting rail | IP 20/TS 32 or TS 35 | | |
| Norms/specifications | | | |
| Emitted interference/interference immunity | | | |
| Wire range, finely stranded/single core | 0.14 $mm^2$ – 4 $mm^2$ / 0.14 $mm^2$ – 6 $mm^2$ / 20 – 10 AWG | | |
| Location of mounting rail | horizontal | | |
| | | | |
| **Accessories** | | | |
| | | | |
| | | | |
| | | | |
| | | | |
| [1)] see limit curve on page 465 | | | |
| | | | |
| | | | |
| | | | |
| | | | |
| | | | |

electronics

# Relay modules
# Operating voltage: 115 V / 230 V

WEG

Overall width 20mm
Screw clamp

**250 V AC / 125 V DC, 1 A (SPDT, N.O.)**
**1 Make contact**

**250 V AC / 250 V DC, 3 A (SPDT)**
**1 Changeover contact**
Approvals:

Dimensions (mm): W x H x D

20 x 58 x 90.5

| **Operating voltage** | Type | Part no. | Std. pack | Type | Part no. | Std. pack |
|---|---|---|---|---|---|---|
| **115 V AC/DC** | | | | WEG-DUO-1W-250V3A | 57.800.5153.0 | 1 |
| **230 V AC** | WEG-230-1S-250V1A | 57.800.0353.0 | 1 | WEG-DUO-1W-250V3A | 57.800.5153.0 | 1 |
| | | | | | | |
| | | | | | | |
| | | | | | | |
| | | | | | | |
| **Wiring diagram, derating curve, limit curve** | **See pages 466-467** | | | **See pages 466-467** | | |
| **Coil circuit** | | | | | | |
| Operating voltage | UB +6 %/–10 % | | | 115 V AC/DC +6 %/–10 % | 230 V AC/DC +6 %/–10 % | |
| Nominal input current | 14 mA AC | | | 12 mA AC/DC | 10 mA AC/DC | |
| Nominal input capacity | 3.2 VA | | | 1.3 VA / 1.3 W | 2.3 V A / 2.3 W | |
| Holding current at 20°C | 4.4 mA AC | | | 2.8 mA AC / 2.4 mA DC | 3.6 mA AC / 2.6 mA DC | |
| **Switching characteristics** | | | | | | |
| Maximum switching voltage | 250 V AC / 125 V DC[1)] | | | 250 V AC / 250 V DC[1)] | | |
| Maximum starting current | 1 A AC/DC[1)] | | | 3 A AC/DC[1)] | | |
| Maximum switching capacity | 1200 V A / 120 W[1)] | | | 2000 V A / 100 W[1)] | | |
| Maximum continous current | 16 A (25 ms) | | | 16 A AC (max. 4 s, 10% ED) | | |
| Pickup/dropout delay approx. | 5.5 ms / 8.2 ms | | | 12 ms / 8 ms | | |
| Chatter time | 2 ms | | | 3 ms | | |
| Maximum switching frequency | | | | | | |
| Contact material | AgNi 0,15 + 1 µ Au | | | AgNi 0.15 + 0.2 µ Au | | |
| Minimum switchable voltage | 80 mV | | | 12 V DC | | |
| Minimum switchable current | 50 µA | | | 10 mA | | |
| Mechanical endurance | > 20 x $10^6$ | | | > 20 x $10^6$ | | |
| Electrical endurance at 24 V DC / 1 A | > 6 x $10^5$ | | | > 6 x $10^6$ | | |
| Electrical endurance at 230 V AC / 3 A | > 1 x $10^5$ | | | > 7 x $10^5$ | | |
| Rated voltage | | | | | | |
| Isolation voltage of input/output | 2 $kV_{eff.}$ | | | 2 $kV_{eff.}$ | | |
| Overvoltage category | | | | | | |
| Degree of pollution | | | | | | |
| Ambient temperature | –25 °C...Derating | | | –25 °C...Derating | | |
| Storage temperature | –40 °C...+85 °C | | | –40 °C...+85 °C | | |
| Protection type/mounting rail | | | | | | |
| Norms/specifications | IP 20/TS 32 or TS 35 | | | IP 20/TS 32 or TS 35 | | |
| Emitted interference/interference immunity | | | | | | |
| Wire range, finely stranded/single core | 0.14 $mm^2$ – 4 $mm^2$ / 0.14 $mm^2$ – 6 $mm^2$ / 20 – 10 AWG | | | 0.14 $mm^2$ – 4 $mm^2$ / 0.14 $mm^2$ – 6 $mm^2$ / 20 – 10 AWG | | |
| Location of mounting rail | horizontal | | | horizontal | | |
| | | | | | | |
| **Accessories** | | | | | | |
| | | | | | | |
| | | | | | | |
| | | | | | | |
| | | | | | | |
| [1)] see limit curve on page 465 | | | | | | |
| | | | | | | |
| | | | | | | |
| | | | | | | |
| | | | | | | |
| | | | | | | |
| | | | | | | |



Subject to change without further notice

# Relay modules
# for current signals – 4...20 mA – 0...20 mA

current relay

Overall width 22.5mm
Screw clamp

**380 V AC / 125 V DC 7 A (SPDT)**
**1 Changeover contact**
Approvals: UL, CSA

Dimensions (mm): W x H x D
22.5 x 58 x 90.5

| **Description** | Type | Part no. | Std. pack |
|---|---|---|---|
| **0-20mA Trip Amplifier Relay** | SR 4...20 mA | 57.802.3053.0 | 1 |
| **1 set point** | | | |
| | | | |
| | | | |
| | | | |
| | | | |
| **Wiring diagram** | **See page 468** | | |
| **Coil circuit** | | | |
| Operating voltage with filtering | 9,5 V...40 V | | |
| Operating voltage without filtering | 8 V...27 V | | |
| Nominal input current at 40 V | | | |
| | with relay off ca. 7 mA | | |
| | with relay on ca. 35 mA | | |
| Current input R, 100 Ω (max. 7 V) | 4...20 mA | | |
| Switching threshold (adjusted with potentiometer) | 2...20 mA | | |
| Residual ripple $I_{max.}$ at measured current 22 mA | 5 $mA_{SS}$ / 5 $mA_{pp}$ | | |
| Residual ripple $I_{max.}$ at measured current 2 mA | 0.5 $mA_{SS}$ / 0.5 $mA_{pp}$ | | |
| Switching hysteresis | ca. 0.4 mA | | |
| | | | |
| **Switching characteristics** | | | |
| Maximum switching voltage | 380 V AC / 125 V DC | | |
| Maximum switching current | 7 A | | |
| Maximum switching capacity | 1750 V A / 210 W | | |
| Permitted minimum load | 5 V DC / 10 mA | | |
| Nominal current load | 250 V AC, 7 A / 30 V DC, 7 A | | |
| Isolation voltage of input/output | 250 $V_{eff.}$ | | |
| Isolation voltage of terminal TS | 2 $kV_{eff.}$ | | |
| Overvoltage category | III | | |
| Degree of pollution | 2 | | |
| Ambient temperature, connected in series without intervals | 0 °C...50 °C | | |
| Ambient temperature, connected in series with interval of 2 cm | 0 °C...60 °C | | |
| Storage temperature | –40 °C...+85 °C | | |
| Protection type/mounting rail | IP 20/TS 35 | | |
| Norms/specifications | | | |
| Location of mounting rail | horizontal | | |
| Wire range | 20 – 10 AWG | | |
| | | | |
| **Accessories** | | | |



Subject to change without further notice

# Relay modules

RAB

Relay output modules
– 1 relay
– 4 relay
– 8 relay
– 16 relay

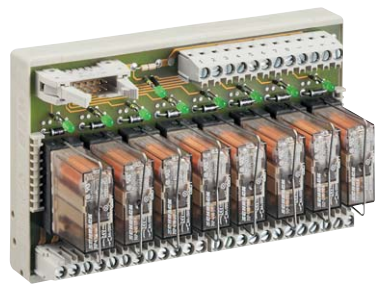

| | **250 V AC / 24 V DC 5 A (SPDT)**<br>**1 Changeover contact**<br>Approvals: | | | **250 V AC / 24 V DC 5 A (SPDT)**<br>**1 Changeover contact**<br>Approvals: | | |
|---|---|---|---|---|---|---|
| Dimensions (mm): W x H x D | 12.5 x 80 x 58.3 | | | 70/128/280 x 80 x 71 | | |
| **Description** | Type | Part no. | Std. pack | Type | Part no. | Std. pack |
| **1 relay** | R12-12V-1W-250V5A | 87.220.7553.0 | 10 | | | |
| **4 relay positive switching** | | | | RAB-SS 4 | 87.220.1853.0 | 1 |
| **8 relay positive switching** | | | | RAB-FSS 8 | 87.220.1953.3 | 1 |
| **16 relay positive switching** | | | | RAB-FSS 16 | 87.220.2253.3 | 1 |
| **4 relay negative switching** | | | | RAB-SS 4 M | 87.221.5553.0 | 1 |
| | | | | | | |
| | | | | | | |
| **Wiring diagram, derating curve, limit curve** | **See page 469** | | | **See page 469** | | |
| **Coil circuit** | | | | | | |
| Operating voltage | 12 V AC/DC ±10% | | | 24 V DC +10%/–15% | | |
| Nominal input current per input | 34 mA | | | 25 mA | | |
| Nominal power consumption | 0.4 W | | | 0.6 W | | |
| Holding current at 20 °C | > 3.5 mA | | | > 2 mA | | |
| Status display | LED Green | | | LED Green | | |
| **Switching characteristics** | | | | | | |
| Maximum switching voltage | 250 V AC / [1]V DC | | | 250 V AC / [1]V DC | | |
| Maximum switching current | 8 A AC/ [1]A DC | | | 8 A AC/ [1]A DC | | |
| Maximum switching capacity | 2000 VA / 120 W | | | 2000 VA / 120 W | | |
| Maximum continous current | 5 A AC/DC[1] | | | 5 A AC/DC[1] | | |
| Pickup/dropout delay approx | 9 ms / 12 ms | | | 9 ms / 12 ms | | |
| Chatter time | 4 ms | | | 4 ms | | |
| Maximum switching frequency | 40 Hz | | | 40 Hz | | |
| Contact material | AgCdO | | | AgCdO | | |
| Minimum switchable voltage | 12 V | | | 12 V | | |
| Minimum switchable current | 100 mA | | | 100 mA | | |
| Mechanical endurance | $3 \times 10^7$ | | | $3 \times 10^7$ | | |
| Electrical endurance at 24 V DC / 5 A | $6 \times 10^5$ | | | $6 \times 10^5$ | | |
| Electrical endurance at 230 V AC / 5 A | $6 \times 10^5$ | | | $6 \times 10^5$ | | |
| Rated voltage | | | | | | |
| Isolation voltage of input/output | 4 $kV_{eff.}$ | | | 4 $kV_{eff.}$ | | |
| Overvoltage category | | | | | | |
| Degree of pollution | | | | | | |
| Ambient temperature | –25 °C...Derating | | | –25 °C...Derating | | |
| Storage temperature | –40 °C...+85 °C | | | –40 °C...+85 °C | | |
| Mounting rail | TS 32 or TS 35 | | | TS 32 or TS 35 | | |
| Norms/specifications | | | | | | |
| Emitted interference/interference immunity | | | | | | |
| Wire range, finely stranded/single core | 0.5 $mm^2$ – 2.5 $mm^2$ / 0.5 $mm^2$ – 4 $mm^2$ / 22 – 12 AWG | | | 0.5 $mm^2$ – 2.5 $mm^2$ / 0.5 $mm^2$ – 4 $mm^2$/ 22 – 12 AWG | | |
| Location of mounting rail | horizontal | | | horizontal | | |
| | | | | | | |
| **Accessories** | | | | | | |
| Replacement relay | | | | | Z8.000.0056.9 | 10 |
| | | | | | | |
| | | | | | | |
| | | | | | | |
| [1] See limit curve on page 465 | | | | | | |
| | | | | | | |
| | | | | | | |
| | | | | | | |
| | | | | | | |



Subject to change without further notice

# RAB

Relay output modules
– 1 relay
– 4 relay
– 8 relay
– 16 relay

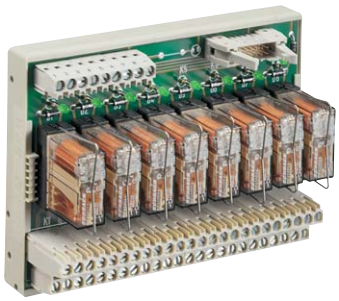

**Important note for user:**
In the case of multiple modules
(1 changeover contact/2 changeover contacts),
the outputs must be supplied from the same
phase (e.g. L1)

## 250 V AC / 24 V DC, 5 A (DPDT)
## 2 Changeover contacts

Approvals:

Dimensions (mm): W x H x D 70/128 x 80 x 71

| Description | Type | Part no. | Std. pack |
|---|---|---|---|
| **1 relay** | | | |
| **4 relay positive switching** | RAB-SS 4/2 | 87.220.4753.3 | 1 |
| **8 relay positive switching** | RAB-SS 8/2 | 87.220.4853.3 | 1 |
| **6 relay positive switching** | | | |
| **4 relay negative switching** | | | |
| | | | |
| | | | |
| **Wiring diagram, derating curve, limit curve** | **See page 469** | | |
| **Coil circuit** | | | |
| Operating voltage | 24 V DC + 10 %/– 15 % | | |
| Nominal input current | 25 mA | | |
| Nominal power consumption | 0.6 W | | |
| Holding current at 20 °C | > 2 mA | | |
| Status display | LED Green | | |
| **Switching characteristics** | | | |
| Maximum switching voltage | 250 V AC / [1]V DC | | |
| Maximum switching current | 8 A AC/[1]A DC | | |
| Maximum switching capacity | 2000 VA / 120 W | | |
| Maximum continuous current | 5 A AC/DC[1] | | |
| Pickup/dropout delay approx. | 9 ms / 12 ms | | |
| Chatter time | 4 ms | | |
| Maximum switching frequency | 40 Hz | | |
| Contact material | AgCdO | | |
| Minimum switchable voltage | 12 V | | |
| Minimum switchable current | 100 mA | | |
| Mechanical endurance | $3 \times 10^7$ | | |
| Electrical endurance at 24 V DC / 5 A | $6 \times 10^5$ | | |
| Electrical endurance at 230 V AC / 5 A | $6 \times 10^5$ | | |
| Rated voltage | | | |
| Isolation voltage of input/output | 4 $kV_{eff.}$ | | |
| Overvoltage category | | | |
| Degree of pollution | | | |
| Ambient temperature | –25 °C...Derating | | |
| Storage temperature | –40 °C...+85 °C | | |
| Mounting rail | TS 32 or TS 35 | | |
| Norms/specifications | | | |
| Emitted interference/interference immunity | | | |
| Wire range, finely stranded/single-core | 0.5 $mm^2$ – 2.5 $mm^2$ / 0.5 $mm^2$ – 4 $mm^2$/ 22 – 12 AWG | | |
| Location of mounting rail | horizontal | | |
| | | | |
| **Accessories** | | | |
| Replacement relay | | Z8.000.0035.5 | 10 |
| | | | |
| | | | |
| | | | |
| [1] See limit curve on page 465 | | | |
| | | | |
| | | | |
| | | | |
| | | | |

electronics

# Relay modules

Relay modules input/output
– 1 relay
– 4 relay
– 8 relay

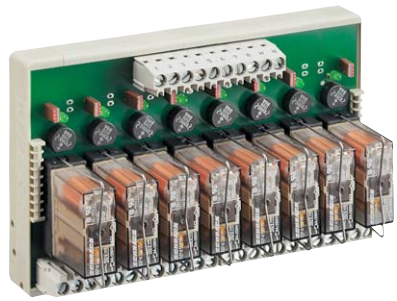

| Description | Type | Part no. | Std. pack | Type | Part no. | Std. pack |
|---|---|---|---|---|---|---|
| | **250 V AC / 24 V DC 4 A (SPDT)**<br>**1 Changeover contact**<br>Approvals: | | | **250 V AC / 24 V DC 4 A (SPDT)**<br>**1 Changeover contact**<br>Approvals: | | |
| Dimensions (mm): W x H x D | 12.5 x 80 x 70 | | | 70/128 x 80 x 71 | | |
| **1 relay** | WR1-230-1W-250V4A | 80.010.0011.0 | 10 | | | |
| **4 relay** | | | | WR4-115-1W-250V4A | 80.010.1102.0 | 1 |
| **8 relay** | | | | WR8-115-1W-250V4A | 80.010.1110.0 | 1 |
| **Wiring diagram, derating curve, limit curve** | **See pages 470-471** | | | **See pages 470-471** | | |
| **Coil circuit** | | | | | | |
| Operating voltage | 230 V AC +6% / –10% | | | 115 V AC +6% /–10% | | |
| Nominal input current per input | ca. 4.5 mA AC | | | ca. 8.5 mA AC/DC | | |
| Nominal power consumption | ca. 1.0 VA | | | ca. 0.95 VA/W | | |
| Holding current at 20 °C | > 0.9 mA AC | | | > 1.3 mA AC / > 1.0 mA DC | | |
| Suppression circuit for input | polarised diode, suppressor diode | | | polarised diode, suppressor diode | | |
| Status display | LED Green | | | LED Green | | |
| **Switching characteristics** | | | | | | |
| Maximum switching voltage | 250 V AC/ [1]V DC | | | 250 V AC / [1]V DC | | |
| Maximum switching current | 8 A AC/[1]A DC | | | 8 A AC/[1]A DC | | |
| Maximum switching capacity | 2000 VA /192 W | | | 2000 VA / 192 W | | |
| Maximum continuous current | 4 A AC/DC | | | 4 A AC/DC | | |
| Pickup/dropout delay approx. | 10 ms /15 ms | | | 12 ms / 13 ms | | |
| Chatter time | 4 ms | | | 4,5 ms | | |
| Maximum switching frequency | 40 Hz | | | 40 Hz | | |
| Contact material | AgNi + 4...6 µ Au | | | AgNi 0.15 + 0.2 µ Au | | |
| Minimum switchable voltage | µV | | | 5 V | | |
| Minimum switchable current | µA | | | 10 mA | | |
| Mechanical endurance | $3 \times 10^7$ | | | $3 \times 10^7$ | | |
| Electrical endurance at 24 V DC / 4 A | $3 \times 10^5$ | | | $3 \times 10^5$ | | |
| Electrical endurance at 230 V AC / 4 A | $3 \times 10^5$ | | | $3 \times 10^5$ | | |
| Rated voltage | | | | | | |
| Isolation voltage of input/output | 4 $kV_{eff.}$ | | | 4 $kV_{eff.}$ | | |
| Overvoltage category | | | | | | |
| Degree of pollution | | | | | | |
| Ambient temperature | –25 °C...Derating | | | –25 °C...+50 °C | | |
| Storage temperature | –40 °C...+80 °C | | | –40 °C...+80 °C | | |
| Mounting rail | TS 32 or TS 35 | | | TS 32 or TS 35 | | |
| Norms/specifications | | | | | | |
| Emitted interference/interference immunity | | | | | | |
| Wire range, finely stranded/single-core | 0.5 $mm^2$ – 2.5 $mm^2$ / 0.5 $mm^2$ – 4 $mm^2$ / 22 – 12 AWG | | | 0.5 $mm^2$ – 2.5 $mm^2$ / 0.5 $mm^2$ – 4 $mm^2$ / 22 – 12 AWG | | |
| Location of mounting rail | horizontal | | | horizontal | | |
| **Accessories** | | | | | | |
| Replacement relay | | | | | Z8.000.0181.0 | 10 |
| [1] See limit curve on page 465 | | | | | | |



Subject to change without further notice

# WR

Relay module input/output
– 1 relay
– 4 relay
– 8 relay

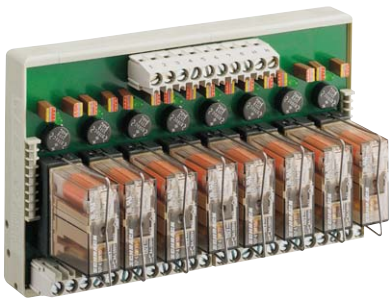

**250 V AC / 24 V DC 4 A (SPDT)**
**1 Changeover contact**

Approvals:

Dimensions (mm): W x H x D

70/128 x 80 x71

| Description | Type | Part no. | Std. pack |
|---|---|---|---|
| **1 relay** | | | |
| **4 relay** | WR4-230-1W-250V4A | 80.010.1106.0 | 1 |
| **8 relay** | WR8-230-1W-250V4A | 80.010.1114.0 | 1 |
| | | | |
| | | | |
| | | | |
| **Wiring diagram, derating curve, limit curve** | **See pages 470-471** | | |
| **Coil circuit** | | | |
| Operating voltage | 230 V AC/DC +6%/–10% | | |
| Nominal input current per input | approx. 4.5 mA AC/DC | | |
| Nominal power consumption | approx. 1.0 VA/W | | |
| Holding current at 20 °C | > 0.7 mA AC / > 0.5 mA DC | | |
| Suppression circuit for input | polarised diode, suppressor diode | | |
| Status display | LED Green | | |
| **Switching characteristics** | | | |
| Maximum switching voltage | 250 V AC / [1]V DC | | |
| Maximum switching current | 8 A AC / [1]A DC | | |
| Maximum switching capacity | 2000 VA / 192 W | | |
| Maximum continuous current | 4 A AC/DC | | |
| Pickup/dropout delay approx. | 12 ms / 13 ms | | |
| Chatter time | 4.5 ms | | |
| Maximum switching frequency | 40 Hz | | |
| Contact material | AgNi 0.15 + 0.2 µ Au | | |
| Minimum switchable voltage | 5 V | | |
| Minimum switchable current | 10 mA | | |
| Mechanical endurance | $3 \times 10^7$ | | |
| Electrical endurance at 24 V DC / 4 A | $3 \times 10^5$ | | |
| Electrical endurance at 230 V AC / 4 A | $3 \times 10^5$ | | |
| Rated voltage | | | |
| Isolation voltage of input/output | 4 $kV_{eff.}$ | | |
| Overvoltage category | | | |
| Degree of pollution | | | |
| Ambient temperature | –25 °C...+50 °C | | |
| Storage temperature | –40 °C...+80 °C | | |
| Mounting rail | TS 32 or TS 35 | | |
| Norms/specifications | | | |
| Emitted interference/interference immunity | | | |
| Wire range, finely stranded/single-core | 0,5 $mm^2$ – 2,5 $mm^2$ / 0,5 $mm^2$ – 4 $mm^2$ / 22 – 12 AWG | | |
| Location of mounting rail | horizontal | | |
| | | | |
| **Accessories** | | | |
| Replacement relay | | Z8.000.0181.0 | 10 |
| | | | |
| | | | |
| | | | |
| [1] See limit curve on page 465 | | | |
| | | | |
| | | | |
| | | | |
| | | | |

electronics

# Relay modules

Relay modules input/output
– 1 relay
– 4 relay
– 8 relay

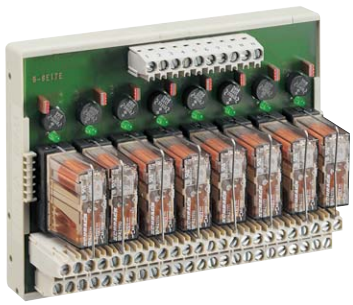

| | **250 V AC / 24 V DC 5 A (DPDT)**<br>**2 Changeover contacts**<br>Approvals of the relays: | | | **250 V AC / 24 V DC 4 A (DPDT)**<br>**2 Changeover contacts**<br>Approvals of the relays: | | |
|---|---|---|---|---|---|---|
| Dimensions (mm): W x H x D | 22.5 x 80 x 68 | | | 70/128 x 80 x 71 | | |
| **Description** | Type | Part no. | Std. pack | Type | Part no. | Std. pack |
| **1 relay** | WR1-DUO-2W-250V5A | 80.010.1100.0 | 5 | | | |
| **4 relay** | | | | WR4-115-2W-250V4A | 80.010.1104.0 | 1 |
| **8 relay** | | | | WR8-115-2W-250V4A | 80.010.1112.0 | 1 |
| **Wiring diagram, derating curve, limit curve** | **See pages 470-471** | | | **See pages 470-471** | | |
| **Coil circuit** | | | | | | |
| Operating voltage | 115/230 V AC/DC +6%/–10% | | | 115 V AC/DC +6%/–10% | | |
| Nominal input current per input | ca. 4.8 mA / 4.8 mA AC/DC | | | ca. 9.5 mA AC/DC | | |
| Nominal power consumption | ca. 0.5 VA/W / 1.1 VA/W | | | ca. 1,0 VA/W | | |
| Holding current at 20 °C | > 1.0 mA AC / > 0.8 mA DC | | | > 1.5 mA AC / > 1,0 mA DC | | |
| Suppression circuit for input | polarised diode, suppressor diode | | | polarised diode, suppressor diode | | |
| Status display | LED Green | | | LED Green | | |
| **Switching characteristics** | | | | | | |
| Maximum switching voltage | 250 V AC / [1]V DC | | | 250 V AC / [1]V DC | | |
| Maximum continous current | 6 A AC/[1]A DC | | | 6 A AC/[1]A DC | | |
| Maximum switching capacity | 1500 VA / 192 W | | | 1500 VA / 192 W | | |
| Maximum switching current | 6 A AC/DC (Derating beachten) | | | 4 A AC/DC (Derating beachten) | | |
| Pickup/dropout delay approx. | 10 ms / 14 ms | | | < 12 ms / < 15 ms | | |
| Chatter time | < 3 ms | | | < 4,5 ms | | |
| Maximum switching frequency | | | | | | |
| Contact material | AgNi 0.15 + 0.2 µ Au | | | AgNi 0,15 + 0,2 µ Au | | |
| Minimum switchable voltage | 5 V | | | 5 V | | |
| Minimum switchable current | 10 mA | | | 10 mA | | |
| Mechanical endurance | $3 \times 10^7$ | | | $3 \times 10^7$ | | |
| Electrical endurance at 24 V DC / 5 A | $1,5 \times 10^5$ | | | $1.5 \times 10^5$ | | |
| Electrical endurance at 230 V AC / 5 A | $1,5 \times 10^5$ | | | $1.5 \times 10^5$ | | |
| Rated voltage | | | | | | |
| Isolation voltage of input/output | 4 $kV_{eff.}$ | | | 4 $kV_{eff.}$ | | |
| Overvoltage category | | | | | | |
| Degree of pollution | | | | | | |
| Ambient temperature | –25 °C...Derating | | | –25 °C...Derating | | |
| Storage temperature | –40 °C...+85 °C | | | –40 °C...+80 °C | | |
| Mounting rail | TS 32 or TS 35 | | | TS 32 or TS 35 | | |
| Norms/specifications | | | | | | |
| Emitted interference/interference immunity | | | | | | |
| Wire range, finely stranded/single-core | 0.5 $mm^2$ – 2.5 $mm^2$ / 0.5 $mm^2$ – 4 $mm^2$ / 22 –12 AWG | | | 0.5 $mm^2$ – 2.5 $mm^2$ / 0.5 $mm^2$ – 4 $mm^2$ / 22 –12 AWG | | |
| Location of mounting rail | horizontal | | | horizontal | | |
| **Accessories** | | | | | | |
| Replacement relay | | Z8.000.0176.2 | 10 | | Z8.000.0176.2 | 10 |

[1] See limit curve on page 465



Subject to change without further notice

# WR

Relay modules input/output
– 1 relay
– 4 relay
– 8 relay

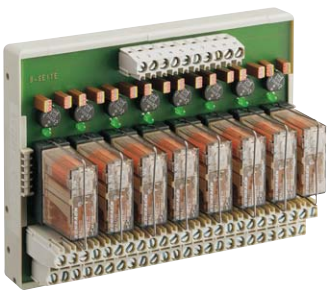

**250 V AC / 24 V DC 4 A (DPDT)**
**2 Changeover contacts**

Approvals of the relays:

Dimensions (mm): W x H x D

70/128 x 80 x 71

| Description | Type | Part no. | Std. pack | Type | Part no. | Std. pack |
|---|---|---|---|---|---|---|
| **1 relay** | | | | | | |
| **4 relay** | WR4-230-2W-250V4A | 80.010.1108.0 | 1 | | | |
| **8 relay** | WR8-230-2W-250V4A | 80.010.1116.0 | 1 | | | |
| | | | | | | |
| | | | | | | |
| | | | | | | |
| **Wiring diagram, derating curve, limit curve** | **See pages 468-469** | | | | | |
| **Coil circuit** | | | | | | |
| Operating voltage | 230 V AC/DC +6%/–10% | | | | | |
| Nominal input current per input | ca. 4.5 mA AC/DC | | | | | |
| Nominal input capacity | ca. 1.0 VA/W | | | | | |
| Holding current at 20 °C | > 0.7 mA AC / > 0.5 mA DC | | | | | |
| Suppression circuit for input | polarised diode, suppressor diode | | | | | |
| Status display | LED Green | | | | | |
| **Switching characteristics** | | | | | | |
| Maximum switching voltage | 0250 V AC / [1] V DC | | | | | |
| Maximum continous current | 6 A AC / [1] A DC | | | | | |
| Maximum switching capacity | 1500 VA / 192 W | | | | | |
| Maximum switching current | 4 A AC/DC (Derating beachten) | | | | | |
| Pickup/dropout delay approx. | < 13 ms / < 16 ms | | | | | |
| Chatter time | < 4,5 ms | | | | | |
| Maximum switching frequency | | | | | | |
| Contact material | AgNi 0,15 + 0,2 µ Au | | | | | |
| Minimum switchable voltage | 5 V | | | | | |
| Minimum switchable current | 10 mA | | | | | |
| Mechanical endurance | $3 \times 10^7$ | | | | | |
| Electrical endurance at 24 V DC / 5 A | $1.5 \times 10^5$ | | | | | |
| Electrical endurance at 230 V AC / 5 A | $1.5 \times 10^5$ | | | | | |
| Rated voltage | | | | | | |
| Isolation voltage of input/output | 4 $kV_{eff.}$ | | | | | |
| Overvoltage category | | | | | | |
| Degree of pollution | | | | | | |
| Ambient temperature | –25 °C...Derating | | | | | |
| Storage temperature | –40°C...+80 °C | | | | | |
| Mounting rail | TS 32 or TS 35 | | | | | |
| Norms/specifications | | | | | | |
| Emitted interference/interference immunity | | | | | | |
| Wire range, finely stranded/single-core | 0.5 $mm^2$ – 2.5 $mm^2$ / 0.5 $mm^2$ – 4 $mm^2$ / 22 –12 AWG | | | | | |
| Location of mounting rail | horizontal | | | | | |
| **Accessories** | | | | | | |
| Replacement relay | | Z8.000.0176.2 | 10 | | | |
| | | | | | | |
| | | | | | | |
| | | | | | | |
| [1] See limit curve on page 465 | | | | | | |
| | | | | | | |
| | | | | | | |
| | | | | | | |
| | | | | | | |
| | | | | | | |

electronics

# Relay modules
# Wieland Relay System

WRS

– 24 V input signal
– 4 kV separation between I/O at a creepage and clearance distance of 8 mm

| | **250 V AC/DC 5 A 48 V DC 20 mA**<br>**1 Make contact (SPST, N.O.)**<br>Approvals: CSA, | | | **250 V AC/DC 5 A 48 V DC 20 mA**<br>**1 Changeover contact (SPDT)**<br>Approvals: CSA, | | |
|---|---|---|---|---|---|---|
| Dimensions (mm): W x H x D | 12.5 x 80 x 58.3 | | | 12.5 x 80 x 60 | | |
| **Description** | Type | Part no. | Std. pack | Type | Part no. | Std. pack |
| **WRS Relay system** | WRS-REL-1S-250V5A | 80.010.0005.0 | 10 | WRS-REL-1W-250V5A | 80.010.0008.0 | 10 |
| **WRS Relay system** | WRS-REL-1S-48V20M | 80.010.0007.0 | 10 | WRS-REL-1W-48V20M | 80.010.0009.0 | 10 |
| **WRS high-current relays** | | | | | | |
| | | | | | | |
| | | | | | | |
| | | | | | | |
| **Wiring diagram, derating curve, limit curve** | **See pages 472-473** | | | **See pages 472-473** | | |
| **Coil circuit** | | | | | | |
| Operating voltage | 24 V AC/DC +10 %/–15 % | | | 24 V DC +10 %/–15 % | | |
| Nominal input current | 25 mA | | | 25 mA | | |
| Nominal power consumption | ca. 0.6 W/VA | | | ca. 0.6 W/VA | | |
| Holding current at 20 °C | ≥ 2 mA | | | ≥ 2 mA | | |
| Parallel connection of max. | 20 Relays | | | 20 Relays | | |
| Suppression circuit of input | polarised diode, suppressor diode | | | polarised diode, suppressor diode | | |
| Status display | LED Green | | | LED Green | | |
| **Switching characteristics** | **Output** | **Input** | | **Output** | **Input** | |
| Maximum switching voltage | 250 V AC/DC[2)] | 48 V DC | | 250 V AC/DC[2)] | 48 V DC | |
| Maximum switching current | 8 A AC/DC[2)] | 20 mA | | 8 A AC/DC[2)] | 20 mA | |
| Maximum switching capacity | 2000 VA / 192 W | 1.2 W | | 2000 VA / 192 W | 1,2 W | |
| Maximum continuous current | 5 A AC/DC | | | 5 A AC/DC | | |
| Pickup/dropout delay approx | 8 ms / 8 ms | 10 ms / 10 ms | | 8 ms / 8 ms | 10 ms / 10 ms | |
| Chatter time | 3 ms | 3 ms | | 3 ms | 3 ms | |
| Contact material | AgCdO | AgNi 0.15 + 10 µ Au | | AgCdO | AgNi 0,15 + 10 µ Au | |
| Minimum switchable voltage | 12 V | µV | | 12 V | µV | |
| Minimum switchable current | 100 mA | µA | | 100 mA | µA | |
| Mechanical endurance | $3 \times 10^7$ | $3 \times 10^7$ | | $3 \times 10^7$ | $3 \times 10^7$ | |
| Electrical endurance at 26 V DC / 15 mA | | $3 \times 10^5$ | | | $3 \times 10^5$ | |
| Electrical endurance at 24 V DC / 5 A | $2.5 \times 10^5$ | | | $2.5 \times 10^5$ | | |
| Electrical endurance at 230 V AC / 5 A | $2.5 \times 10^5$ | | | $2.5 \times 10^5$ | | |
| Rated voltage | | | | | | |
| Isolation voltage of input/output | 4 $kV_{eff.}$ | 4 $kV_{eff.}$ | | 4 $kV_{eff.}$ | 4 $kV_{eff.}$ | |
| Overvoltage category | | | | | | |
| Degree of pollution | | | | | | |
| Ambient temperature | –25°C...Derating | –25 °C...+50 °C | | –25 °C...Derating | –25 °C...+50 °C | |
| Storage temperature | –40 °C...+85 °C | –40 °C...+85 °C | | –40 °C...+85 °C | –40 °C...+85 °C | |
| Mounting rail | TS 32 or TS 35 | | | TS 32 or TS 35 | | |
| Norms/specifications | | | | | | |
| Emitted interference/interference immunity | | | | | | |
| Wire range, finely stranded/single-core | 0.5 $mm^2$ – 2.5 $mm^2$/ 0.5 $mm^2$ – 4 $mm^2$ / 22 – 12 AWG | | | 0.5 $mm^2$ – 2.5 $mm^2$/ 0.5 $mm^2$ – 4 $mm^2$ / 22 – 12 AWG | | |
| Location of mounting rail | horizontal | | | horizontal | | |
| | | | | | | |
| **Accessories** | | | | | | |
| Plug-in jumper ($I_{max}$ = 0.5 A AC/DC) | | Z8.000.0103.4 | 10 | | Z8.000.0103.4 | 10 |
| | | | | | | |
| | | | | | | |
| | | | | | | |
| [2)] See d.c. limit curve on page 471 | | | | | | |
| | | | | | | |
| | | | | | | |
| | | | | | | |



Subject to change without further notice

# WRS

– 24 V input signal
– 4 kV separation between I/O at a creepage and clearance distance of 8 mm

High current relay for 16 A

**Important note for user:**
In the case of single modules with 2 changeover contacts, the two sets of contacts have to be supplied from the same phase (e.g. L1)

| | **250 V AC/DC 5 A 48 V DC 20 mA 2 Changeover contact (DPDT)** | | | **250 V AC/DC 16 A 1 Changeover contact (SPDT)** | | |
|---|---|---|---|---|---|---|
| | Approvals: CSA, | | | Approvals: CSA, CE | | |
| Dimensions (mm): W x H x D | 22.5 x 80 x 60 | | | 22.5 x 80 x 58.3 | | |
| **Description** | Type | Part no. | Std. pack | Type | Part no. | Std. pack |
| **WRS Relay system** | WRS-REL-2W-250V5A | 80.010.1003.0 | 5 | | | |
| **WRS Relay system** | WRS-REL-2W-48V20M | 80.010.1002.0 | 5 | | | |
| **WRS high-current relay** | | | | WRS-REL-1W-250V16 | 80.010.0010.0 | 5 |
| **Wiring diagram, derating curve, limit curve** | **See pages 472-473** | | | **See pages 472-473** | | |
| **Coil circuit** | **Output** | **Input** | | | | |
| Operating voltage | 24 V AC/DC +10 %/–15 % | 24 V DC +10 %/–15 % | | 24 V AC/DC +10 %/–15 % | | |
| Nominal input current | | 25 mA | | 25 mA | | |
| Nominal power consumption | | ca. 0.6 W/VA | | ca. 0,6 W/VA | | |
| Holding current at 20 °C | | ≥ 2 mA | | ≥ 2 mA | | |
| Parallel connection of max. | 20 Relays | | | 20 Relays | | |
| Suppression circuit of input | Polarised diode | | | | | |
| Status display | LED Green | | | LED Green | | |
| **Switching characteristics** | **Output** | **Input** | | | | |
| Maximum switching voltage | 250 V AC/DC[2)] | 48 V DC | | 250 V AC / V DC[2)] | | |
| Maximum switching current | 6 A AC/DC[2)] | 20 mA | | 16 A AC / V DC[2)] | | |
| Maximum switching capacity | 1500 VA / 144 W | 1,2 W | | 4000 VA / 400 W[2)] | | |
| Maximum continuous current | 5 A AC/DC | | | 16 A AC/DC[2)] | | |
| Pickup/dropout delay approx. | 10 ms / 5 ms | 10 ms / 10 ms | | 10 ms / 5 ms | | |
| Chatter time | 3 ms | 3 ms | | 3 ms | | |
| Contact material | AgCdO | AgNi 0.15 + 10 µ Au | | AgCdO | | |
| Minimum switchable voltage | 12 V | µV | | 12 V | | |
| Minimum switchable current | 100 mA | µA | | 100 mA | | |
| Mechanical endurance | $3 \times 10^7$ | $3 \times 10^7$ | | $3 \times 10^7$ | | |
| Electrical endurance at 26 V DC / 15 mA | | $3 \times 10^5$ | | | | |
| Electrical endurance at 24 V DC / continuous current | $2{,}5 \times 10^5$ | | | $1.8 \times 10^5$ | | |
| Electrical endurance at 230 V AC / continuous current | $2{,}5 \times 10^5$ | | | $1.8 \times 10^5$ | | |
| Rated voltage | | | | | | |
| Isolation voltage of input/output | 4 $kV_{eff.}$ | 4 $kV_{eff.}$ | | 4 $kV_{eff.}$ | | |
| Overvoltage category | | | | | | |
| Degree of pollution | | | | | | |
| Ambient temperature | –25 °C...+50 °C | –25 °C...+50 °C | | –25 °C...Derating | | |
| Storage temperature | –40 °C...+85 °C | –40 °C...+85 °C | | –40 °C...+85 °C | | |
| Mounting rail | TS 32 or TS 35 | | | TS 32 or TS 35 | | |
| Norms/specifications | | | | | | |
| Emitted interference/interference immunity | | | | | | |
| Wire range, finely stranded/single-core | 0.5 $mm^2$ – 2.5 $mm^2$ / 0.5 $mm^2$ – 4 $mm^2$ / 22 – 12 AWG | | | 0.5 $mm^2$ – 2.5 $mm^2$ / 0.5 $mm^2$ – 4 $mm^2$ / 22 – 12 AWG | | |
| Location of mounting rail | horizontal | | | horizontal | | |
| **Accessories** | | | | | | |
| Plug-in jumper ($I_{max}$ = 0.5 A AC/DC) | | Z8.000.0103.4 | 10 | | Z8.000.0103.4 | 10 |

[2)] see d.c. limit curve and derating curve on page 471

electronics

# Relay modules
## Timer relay
## flare

Multifunction timer relay
– on delay
– Single Shot
– Cycle Off – pulsing
– Cycle On – pulsing
– off delay
– timer range 0.1 sec – 300 sec

Timer relay on delay
– timer range 1 – 100 sec, 1 – 100 min

Dimensions (mm): W x H x D
6.2 x 89 x 70

**Multifunction / On delay/off delay, Single Shot, cycle / 1 make contact (SPST N.O.)**
Approvals: CSA

**Timer on delay relay**
Approvals: CSA

| **Time range** | Screw terminal | Spring-clamp | Std. pack | Screw terminal | Spring-clamp | Std. pack |
|---|---|---|---|---|---|---|
| **0.1 – 300 sec** | | 81.020.4100.0 | 10 | | | |
| **1 – 100 sec** | | | | | 81.020.4101.0 | 10 |
| **1 – 100 min** | | | | | 81.020.4102.0 | 10 |
| | | | | | | |
| **Wiring diagram, derating curve, limit curve** | **See pages 474** | | | **See pages 474** | | |
| **Coil circuit** | | | | | | |
| Operating voltage | 24 V DC +10%/–15% | | | 24 V DC +10%/–15% | | |
| Control voltage (TRIGGER) | 24 V DC +10%/–15% | | | 24 V DC +10%/–15% | | |
| Nominal current | ca. 10 mA | | | ca. 10 mA | | |
| Time setting | At the front (behind the hinged identification plate holder) | | | At the front (behind the hinged identification plate holder) | | |
| Setting of function | DIP switch S1–S5/potentiometer | | | Potentiometer | | |
| Status display | LED Green | | | Green LED | | |
| Repeat accuracy | ± 1% of selected range | | | ± 1% of selected range | | |
| **Switching characteristics** | | | | | | |
| Maximum switching voltage | 250 V AC / 300 V DC | | | 250 V AC / 300 V DC | | |
| Maximum switching current | 6 A AC / 2 A DC | | | 6 A AC / 2 A DC | | |
| Maximum switching capacity | 1500 VA / 48 W | | | 1500 VA / 48 W | | |
| Maximum starting current | 10 A; 4 sec. | | | 10 A; 4 sec. | | |
| Pickup/dropout delay | 1 ms / 5 ms | | | 1 ms / 5 ms | | |
| Chatter time | 2 ms | | | 2 ms | | |
| Maximum switching frequency | 20 Hz | | | 20 Hz | | |
| Contact material | $AgSnO_2$ | | | $AgSnO_2$ | | |
| Minimum switchable voltage | 12 V | | | 12 V | | |
| Minimum switchable current | 8 mA | | | 8 mA | | |
| Mechanical endurance | $2 \times 10^7$ | | | $2 \times 10^7$ | | |
| Electrical endurance 24 V DC / 2 A | $6 \times 10^5$ | | | $6 \times 10^5$ | | |
| Electrical endurance 230 V AC / 6 A | $8 \times 10^4$ | | | $8 \times 10^4$ | | |
| Rated voltage | | | | | | |
| Isolation voltage of input/output | 4 $kV_{eff.}$ | | | 4 $kV_{eff.}$ | | |
| Overvoltage category | III (according to HD 625.1S1) | | | III (according to HD 625.1S1) | | |
| Degree of pollution | 2 (according to HD 625.1S1) | | | 2 (according to HD 625.1S1) | | |
| Ambient temperature | 0 °C...+50 °C | | | 0 °C...+50 °C | | |
| Storage temperature | –40 °C...+80 °C | | | –40 °C...+80 °C | | |
| Protection type/mounting rail | IP 20 / TS35 | | | IP 20 / TS35 | | |
| Norms/specifications | VDE 0160; VDE 0106 T101 | | | VDE 0160; VDE 0106 T101 | | |
| Emitted interference/interference immunity | EN 61000-6-3; EN 61000-6-2 | | | EN 61000-6-3; EN 61000-6-2 | | |
| Wire range of screw terminals | – | | | – | | |
| Wire range of spring clamp terminals | 24 – 12 AWG | | | 24 – 12 AWG | | |
| finely stranded | 0.14 $mm^2$ – 1.5 $mm^2$ | | | 0.14 $mm^2$ – 1.,5 $mm^2$ | | |
| single core | 0.5 $mm^2$ – 2.5 $mm^2$ | | | 0.5 $mm^2$ – 2.5 $mm^2$ | | |
| | | | | | | |
| CSA EX | Class I, Division 2, Groups A, B, C and D, T6 | | | Class I, Division 2, Groups A, B, C and D, T6 | | |
| | | | | | | |
| **Accessories** | | | | | | |
| Plug-in jumper ($U_{max.}$ = 50 V, $I_{max.}$ = 2 A) | Z8.000.0200.8 | | | Z8.000.0200.8 | | |
| 8 digit marker tag, unmarked, 60 off | Z4.242.5153.0 | | | Z4.242.5153.0 | | |
| Comb for potential distribution, red/blue | Z8.000.0202.3 / Z8.000.0202.4 | | | Z8.000.0202.3 / Z8.000.0202.4 | | |
| End caps for comb, red/blue | Z8.000.0202.1 / Z8.000.0202.2 | | | Z8.000.0202.1 / Z8.000.0202.2 | | |
| | | | | | | |
| | | | | | | |



Subject to change without further notice

# WRS

Multifunction time relay
– on delay
– Single Shot
– Cycle on, pulsing
– off delay
– timer range 0.1 sec – 255 sec

## WRS Multifunction timer relay / 1 Changeover contact (SPDT)

Approvals: CSA,

Dimensions (mm): W x H x D
38.7 x 80 x 60

| | | | |
|---|---|---|---|
| **Multi function** | Screw terminal | Spring-clampStd. pack | |
| **0.10 – 255.0 sec** | WRS-TIMER-250V5A | 81.020.3000.0 10 | |
| | | | |
| | | | |
| | | | |
| **Wiring diagram, derating curve, limit curve** | **See pages 475** | | |
| **Coil circuit** | | | |
| Operating voltage | 24 V DC +10%/–15% | | |
| Nominal input current | 8.2/29 mA inactive/active | | |
| Suppression circuit of input | Polarised diode | | |
| Status display | | | |
| | Input | LED Green | |
| | Output | LED red | |
| Time setting | Potentiometer | | |
| Parallel connection of max | 20 Relays | | |
| **Switching characteristics** | | | |
| Maximum switching voltage | 250 V AC / V DC[1)] | | |
| Maximum switching current | 6 A AC / V DC[1)] | | |
| Maximum switching capacity | 1500 VA / 192 W[1)] | | |
| Maximum continuous current | 5 A AC / DC[1)] | | |
| Pickup/dropout delay approx. | 10 ms / 5 ms | | |
| Chatter time | 3 ms | | |
| Contact material | AgNi 0.15 + 0.2 µ Au | | |
| Minimum switchable voltage | 5 V | | |
| Minimum switchable current | 10 mA | | |
| | | | |
| Mechanical endurance | $3 \times 10^7$ | | |
| Electrical endurance at 24 V DC / continuous current | $1.5 \times 10^5$ | | |
| Electrical endurance at 230 V AC / continuous current | $1.5 \times 10^5$ | | |
| | | | |
| Insulation voltage of input/output | 4 $kV_{eff.}$ | | |
| | | | |
| Ambient temperature | –25 °C...+50 °C | | |
| Storage temperature | –40 °C...+85 °C | | |
| | | | |
| Wire range | 22 - 12 AWG | | |
| finely stranded | 0.5 $mm^2$ – 2.5 $mm^2$ | | |
| single core | 0.5 $mm^2$ – 4 $mm^2$ | | |
| Mounting rail | TS 32 or TS 35 | | |
| Location of mounting rail | horizontal | | |
| | | | |
| | | | |
| | | | |
| | | | |
| **Accessories** | | | |
| Plug-in jumper ($I_{max.}$ = 0.5 A AC/DC) | | Z8.000.0103.4 10 | |
| | | | |
| [1)] See limit curve on page 471 | | | |
| | | | |
| | | | |
| | | | |

electronics

flare

## Wiring diagrams: *flare* – Mechanical relay modules

### 12-V-/24-V-Relay
### 1 Changeover contact (SPDT)

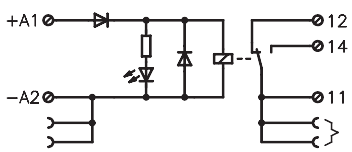


### 110-V-/230-V-Relay
### 1 Changeover contact (SPDT)

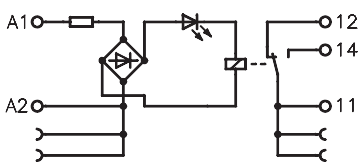


### 24-V-Relay
### 2 Changeover contact (DPDT)

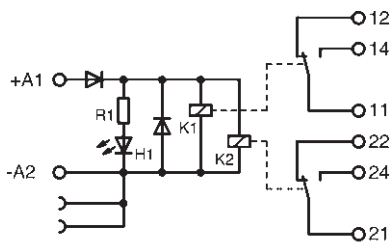


### Isolating blade terminal relay
### (SPDT)

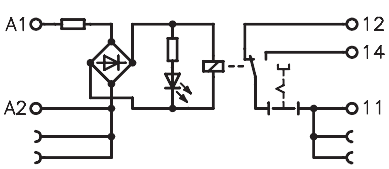


### Hand-0-Auto-Relay
### (SPST, N.O.)

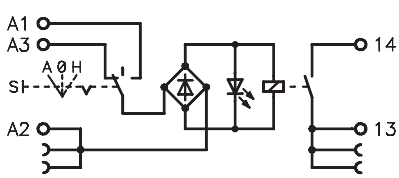


### Housing with spring clamp terminals

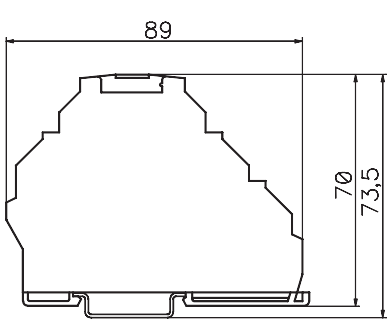


### Housing with screw terminals

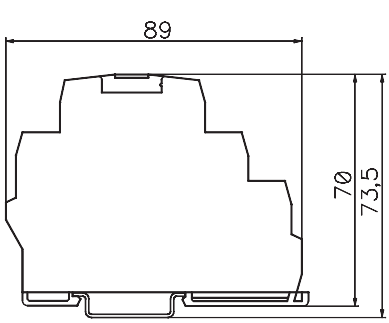


### Connection of isolating blade terminal relay

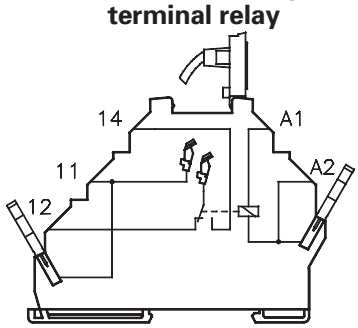




Subject to change without further notice

## Derating: *flare* – Mechanical relay modules

**24-V-Relay**
**1/2 Changeover contact (SPDT/DPDT)**
**12-V-Relay 1 Changeover contact (SPDT)**
**Isolating blade terminal relay (SPDT)**
**HAND-0-AUTO-Relay (SPST, N.O.)**
**Time relay (SPST, N.O.)**

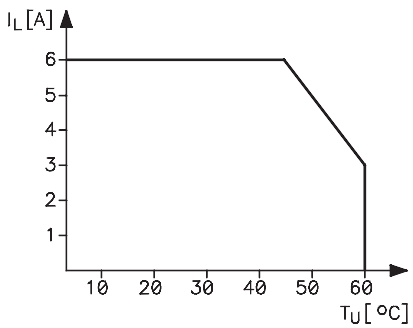


**110-V-Relay 1 Changeover contact (SPDT)**

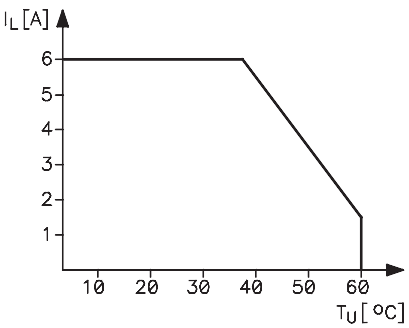


**230 V-Relay**
**1 Changeover contact (SPDT)**

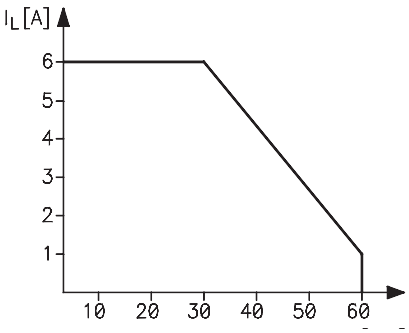


**Derating curve for d.c. loads**

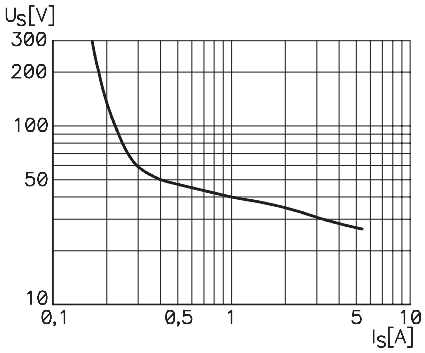


**Switching capacity according to 60947-5.1**

| | resistive | inductive | |
|---|---|---|---|
| | AC 12 | AC 15 | DC 13 |
| V | A | A | A |
| 24 | 6 | 3 | 1 |
| 110 | 6 | 3 | 0.2 |
| 230 | 6 | 3 | 0.1 |

# Relay modules

## Wiring diagrams

## Derating

### WEG-REL-1S 250 V 3 A

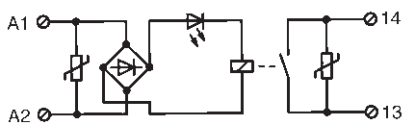


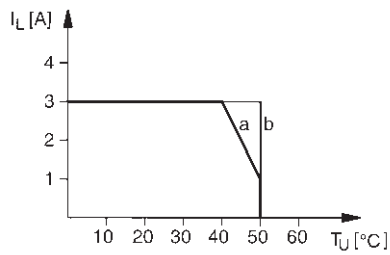


### WEG-REL-1W 250 V 5 A

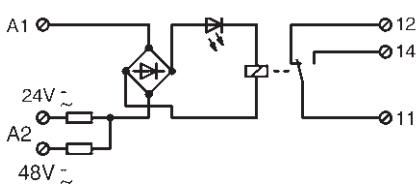


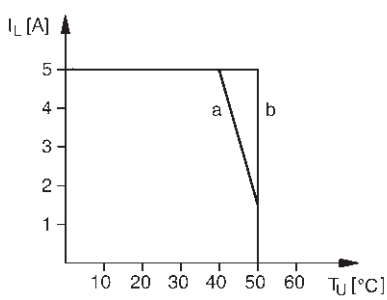


### WEG-REL-2W 250 V 4 A

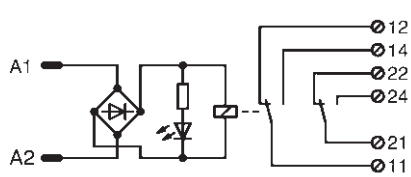


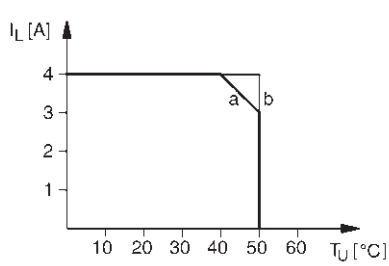


a = side by side without spacing
b = side by side with spacing > 20 mm



Subject to change without further notice

## Wiring diagrams

## Derating

### WEG-230-1S 250 V 1 A

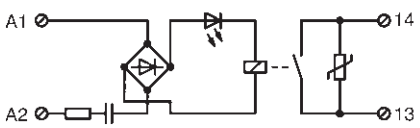


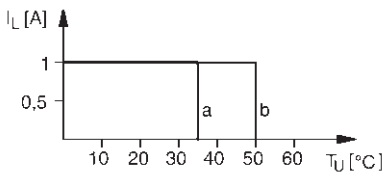


a = side by side without spacing
b = side by side with spacing > 20 mm

### WEG-DUO-1W 250 V 3 A

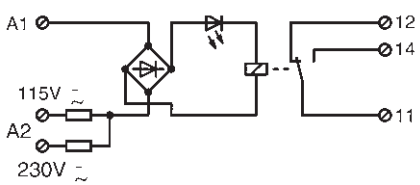


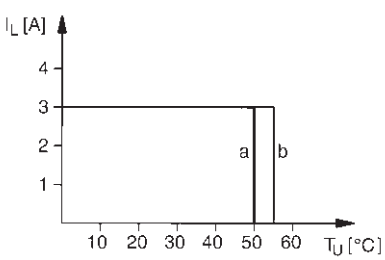


### Limit curve (for resistive load)

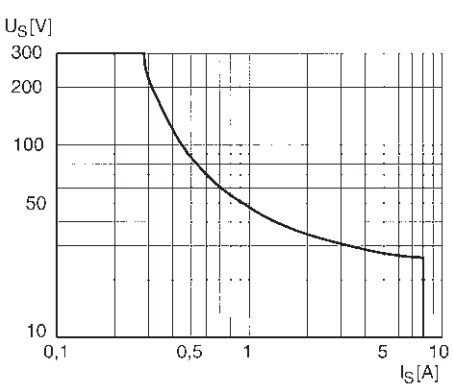


electronics

## Dimensions

### WEG-REL-1S 250 V 3 A

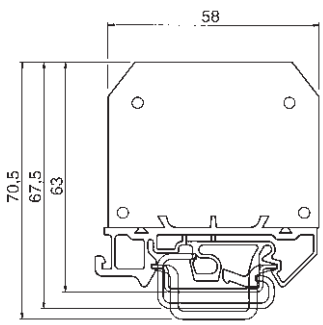


### WEG-REL-1W 250 V 5 A and WEG-REL-2W 250 V 4 A

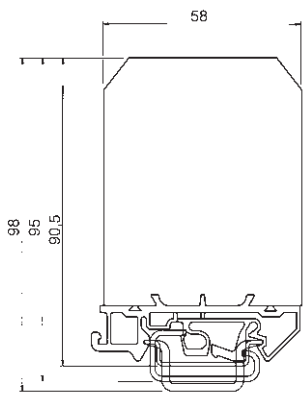


### WEG-230-1S 250 V 1 A

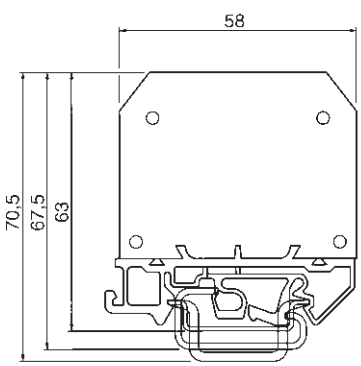


### WEG-DUO-1W 250 V 3 A Current relay SR 4…20mA

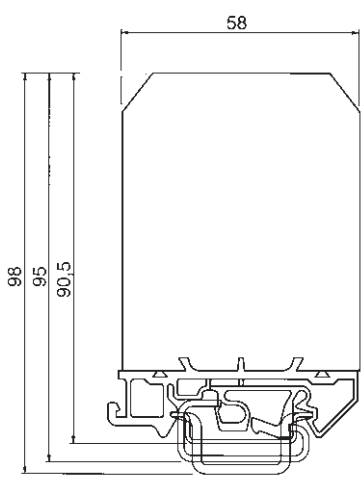


### Wiring diagram Current relay SR 4...20 mA

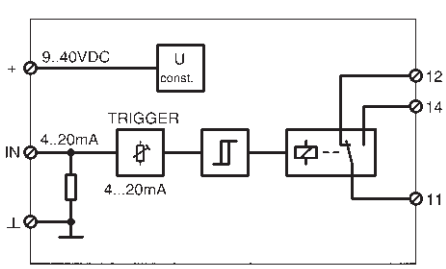




Subject to change without further notice

# RAB

## Wiring diagrams

### R12-12V-1W 250 V 5 A

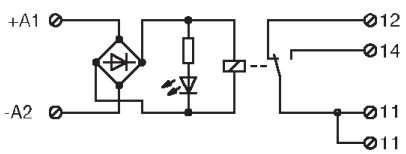


### RAB – 1 Changeover contact (SPDT)

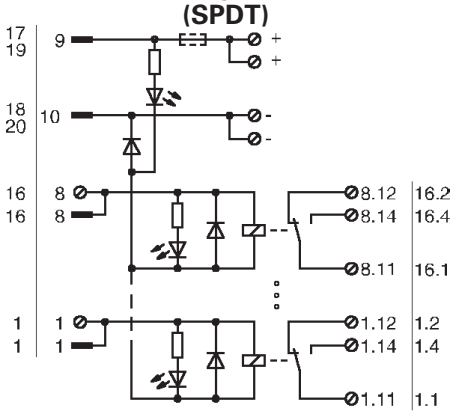


### RAB – 2 Changeover contact (DPDT)

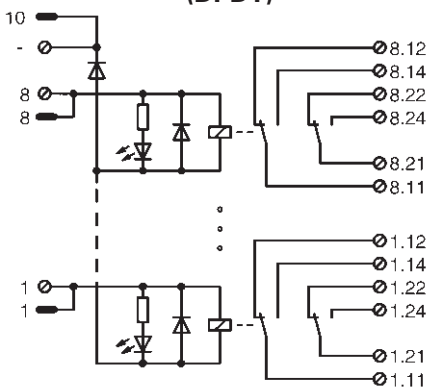


## Derating

### R12-12V-1W 250 V 5 A

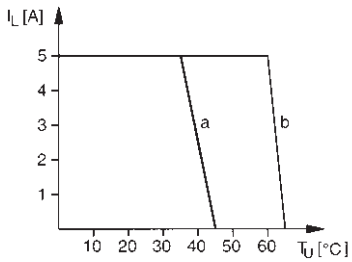


a = continuous operation
b = switching operation 50% duty cycle

### RAB-FSS and RAB-SS

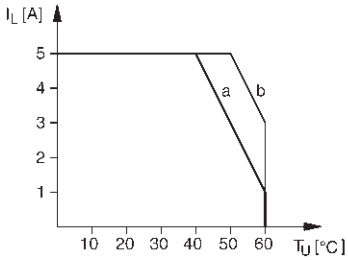


## Dimensions

### R12-12V-1W 250 V 5 A

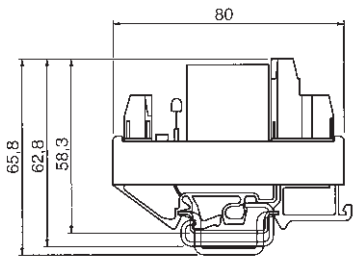


### RAB – 1 Changeover contact (SPDT)

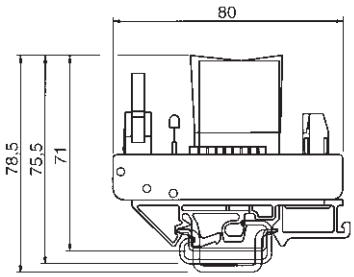


### RAB – 2 Changeover contact (DPDT)

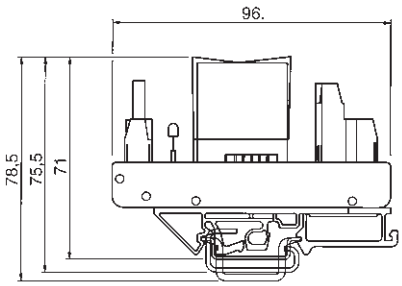


electronics

# Relay modules

## Wiring diagrams

### WR1-230-1W 250 V 4 A

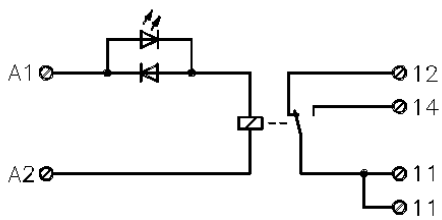


### WR4/8-115-1W 250 V 4 A

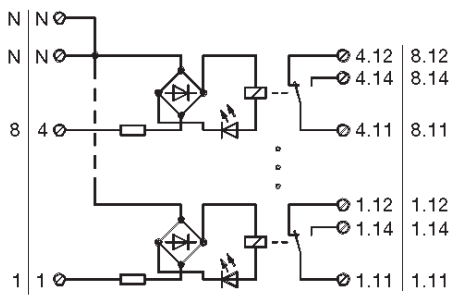


### WR4/8-230-1W 250 V 4 A

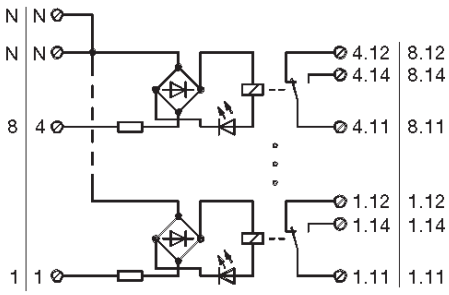


### WR1-DUO-2W 250 V 5 A

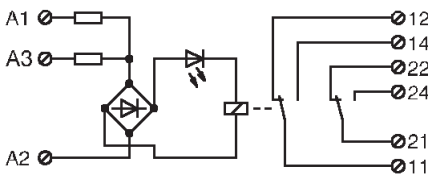


### WR4/8-115-2W 250 V 4 A

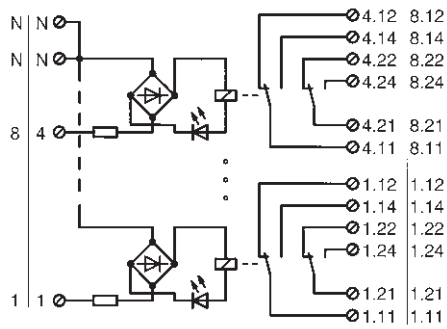


### WR4/8-230-2W 250 V 4 A

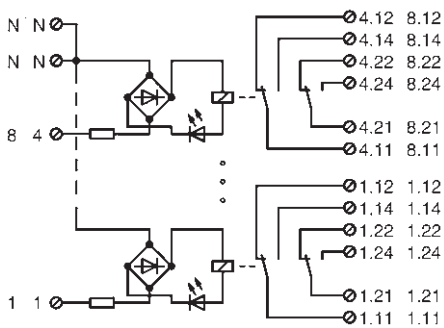




Subject to change without further notice

## Derating

### WR1 – 1 Changeover contact (SPDT)

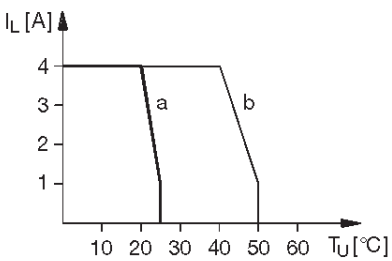


a = side by side without spacing
b = side by side with spacing of 5 mm

### WR1 – DUO

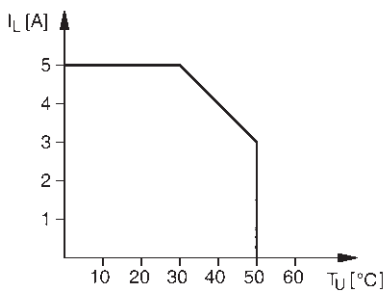


### WR4/WR8 – 2 Changeover contact (DPDT)

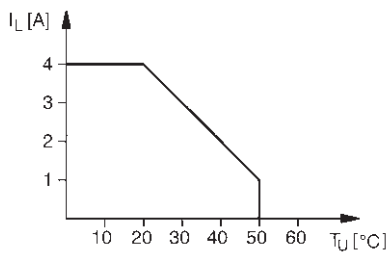


## Dimensions

### WR1 – 1 Changeover contact (SPDT)

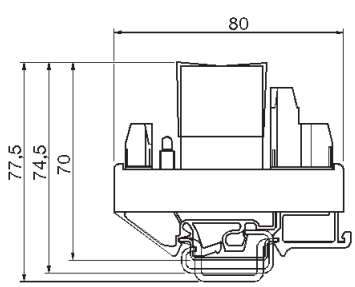


### WR4/WR8 – 1 Changeover contact (SPDT)

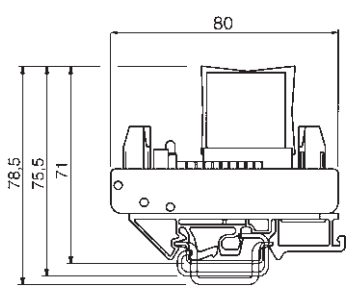


### WR1 – DUO

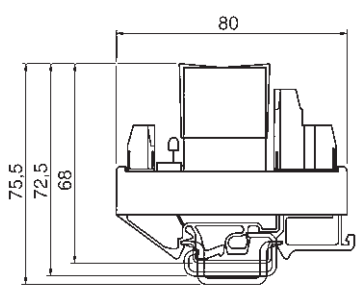


### WR4/WR8 – 2 Changeover contact (DPDT)

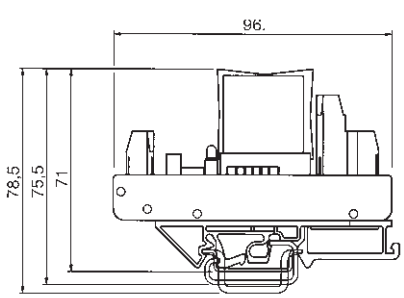


electronics

## Wiring diagrams of relay couplers

### WRS-REL-1S 250 V 5 A

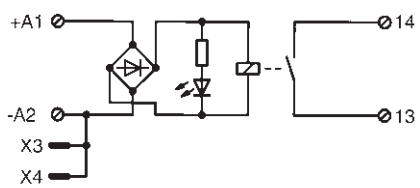


### WRS-REL-1W 250 V 5 A

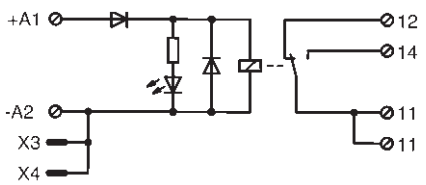


### WRS-REL-2W 250 V 5 A

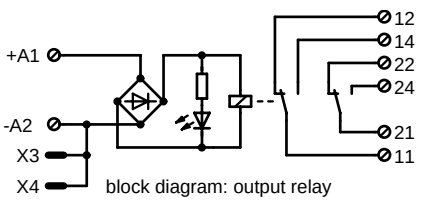


### WRS-REL-1W 250 V 16 A

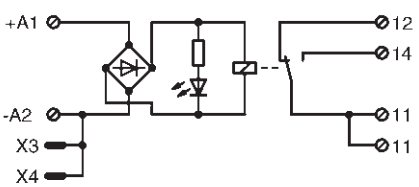


## Dimensions

### WRS-REL-1S 250 V 5 A
### WRS-REL-1W 250 V 16 A

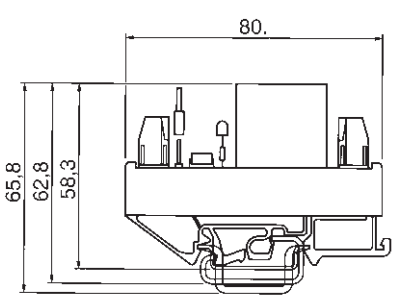


### WRS-REL-1W 250 V 5 A
### WRS-REL-2W 250 V 5 A

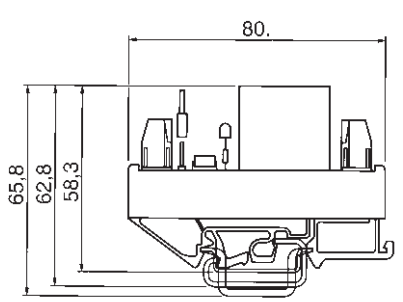




Subject to change without further notice

## Derating

**WRS-REL-1S 250 V 5 A**
**WRS-REL-1W 250 V 5 A**

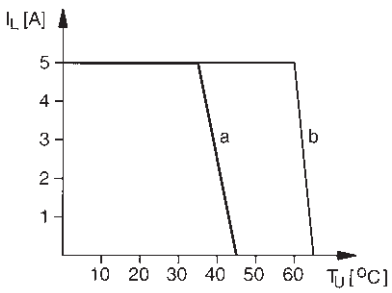


a = side by side without spacing
b = side by side with spacing > 20 mm

## Contact loading:

**WRS-REL-1S 250 V 5 A**
**WRS-REL-1W 250 V 5 A**
**WRS-REL-2W 250 V 5 A**

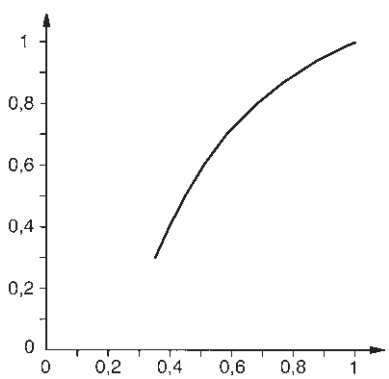


## Limit curve:

**WRS-REL-1S 250 V 5 A**
**WRS-REL-1W 250 V 5 A**
**WRS-REL-2W 250 V 5 A**

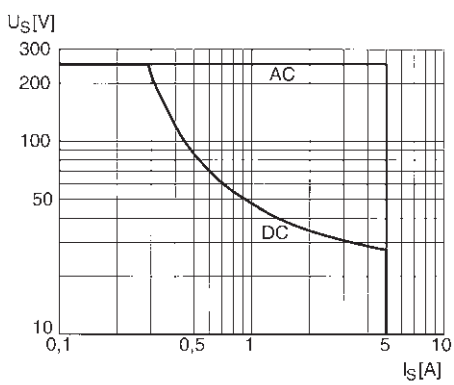


**D.C. limit curve and derating curve:**
**WRS-REL-1W 250 V 16 A**

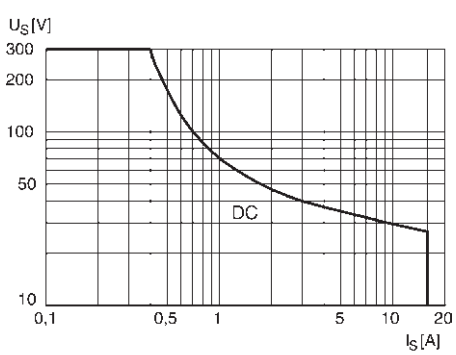


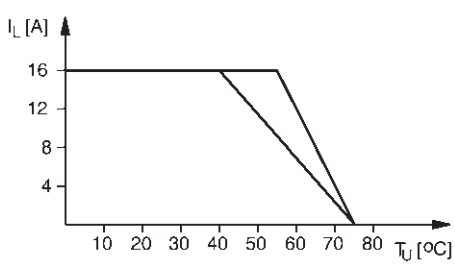


a = side by side without spacing
b = side by side with spacing of 5 mm

flare

## Block diagrams of *flare* timer relays

### Multifunction

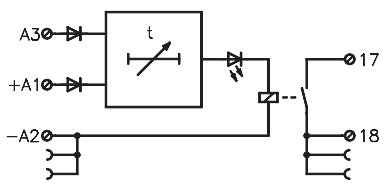


### On delay

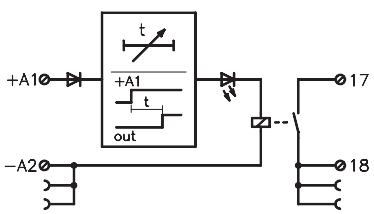


### Derating: Timer relays

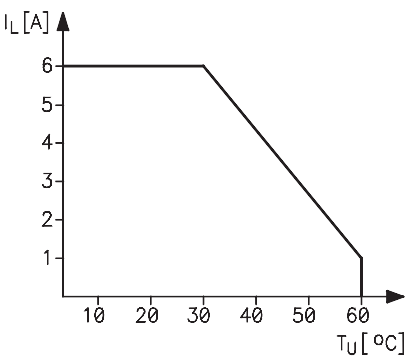


**Setting the type of function**

| Function | DIP-Switch 1 | 2 | 3 |
|---|---|---|---|
| on delay | on | on | on |
| Single Shot | on | off | on |
| Cycle on pulsing | on | on | off |
| Cycle off pulsing | on | off | off |
| off delay | off | off | off |

**Setting the time ranges**

| timer range ± 20% t min | t max | DIP-Switch 4 | 5 |
|---|---|---|---|
| 0.1 | 1.2 sec | off | on |
| 0.4 | 5 sec | on | off |
| 3.5 | 40 sec | on | on |
| 30 | 300 sec | off | off |

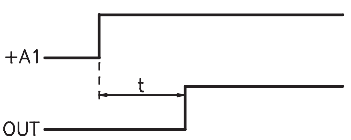


on delay

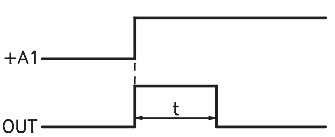


Single Shot

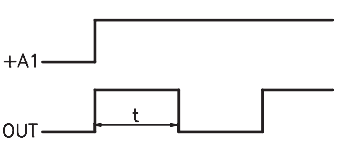


Cycle on, pulsing

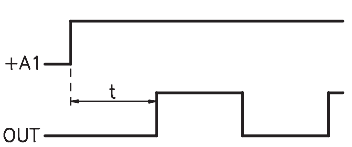


Cycle off, pulsing

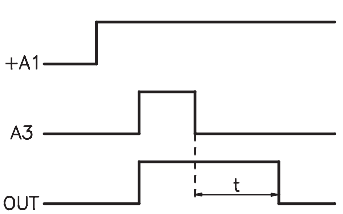


off delay

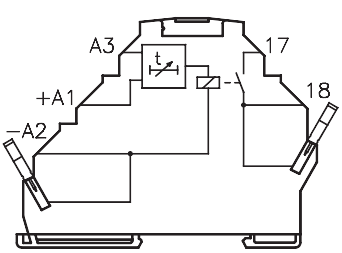


Terminal assignment: Timer relay



Subject to change without further notice

# WRS

## Block diagram of multi function *WRS* timer relays

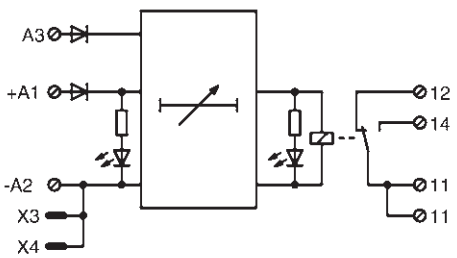


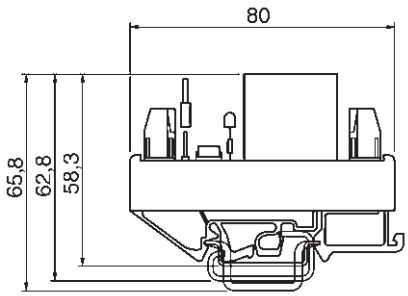


**Setting the type of function**

| Function | DIP-switch 1 | 2 | 3 |
|---|---|---|---|
| on delay | on | on | on |
| Single Shot | on | on | on |
| Cycle on, pulsing | off | on | off |
| off delay | off | off | off |

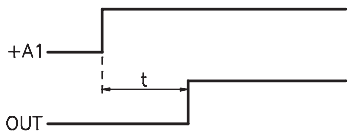


on delay

**Setting the time ranges**

| timer range ± 20% t min | t max | DIP-switch 4 | 5 |
|---|---|---|---|
| 0.1 | 1 sec | off | on |
| 0.4 | 4 sec | on | off |
| 3 | 30 sec | on | on |
| 25 | 255 sec | off | off |

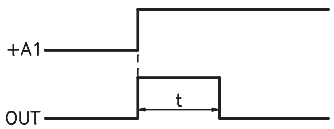


Single shot

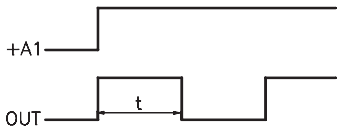


Cycle on, pulsing

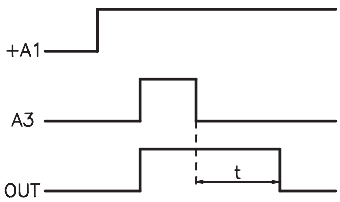


off delay

electronics

# Relay modules
# Solid state relays

flare

### Wieland solid-state relay modules, the powerful addition

Solid-state relays are used in the same way as electromechanical relays as a connecting element between field devices and electronic control and signalling equipment. These modules can offer additional functionalities to the switching tasks that are required during processing. The core characteristics of the solid-state relays are:

- ❒ High switching frequencies up to several kHz
- ❒ Almost unlimited service life due to lack of mechanics
- ❒ Insensitive to vibrations and impulse loads
- ❒ Bounce-free and noise-free switching
- ❒ Control power in the lower mW range

Wieland offers a full range of solid state relay modules with the properties outlined above. Depending on the required applications, a superior selection of relay modules are available with various operating voltages, output arrangements and housings.

### Product ranges:

***flare***, Solid-state relays with an overall width of 6.2 mm with input voltages of 24 V DC up to 230 V AC and switching currents up to 2 A.

***WRS***, Solid-state relays in a mounting base with input voltages of 24 V DC up to 230 V AC and switching currents up to 6 A.

***M-PB***, Plug-in, one- to eight-channel solid-state relays in a mounting base with input voltage voltages of 24 V DC up to 230 V AC and switching currents up to 3 A.

### Overview of the technical data

### Input circuit/control side

Wieland solid-state relays can be controlled with direct or alternating voltage, depending on their type. Each of the modules contains a suppression circuit against polarity reversal and an LED for status display in the input circuit.

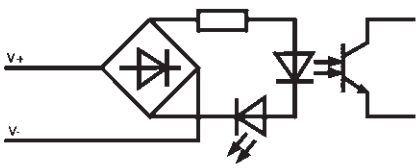


Block diagram of DC input

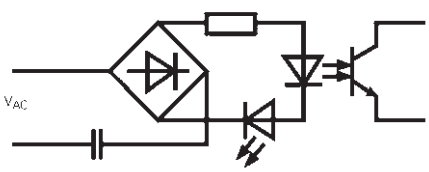


Block diagram of AC input

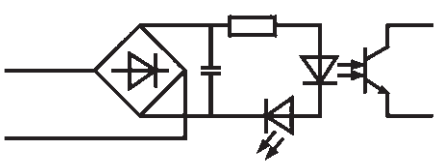

Block diagram of AC/DC input

To ensure safe operation of the relay the residual voltage in the control circuit must not exceed 5% DC or 15% AC of this operating voltage as specified in VDE 0435.

### Output circuit/loadside

A solid-state relay for either DC or AC loads can be selected depending on the application. Also with DC outputs there are 2 types of connection available.

- ❒ 2 wire output
- ❒ 3 wire output, with negative switching

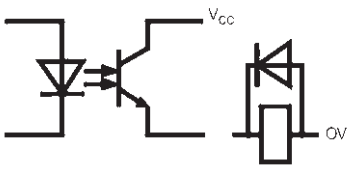


Block diagram of 2 wire output

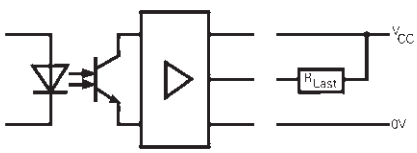


Block diagram of 3 wire output

To guarantee error-free operation it is important to select a relay with a rating that meets the voltage and current requirement and also to add a protective circuit to the output as shown in the block diagram above - such as a varistor or RC element.

If a solid-state relay is operated with an inductive load, the load must be equipped with a protective suppression circuit such as a free-wheeling diode. In all cases, it must be ensured that the protection level of the protective device lies below the respective off-state voltage of the relay.

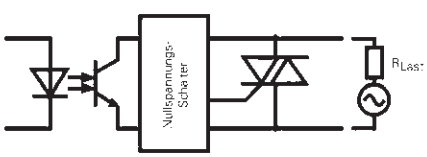


Block diagram of AC output

Solid state relays for the AC loads incorporate a triac as the switching element. A triac is a zero voltage switch and is used to avoid high inrush and back EMF peaks by connecting the load at zero voltage and disconnecting the load at zero current.

As for D.C. loads, care should be taken that the protection level of the protective measures lies below the off-state voltage of the Triac.

# Relay modules
# Solid state relays

flare

Overall width: 6.2 mm

Dimensions (mm): W x H x D
6.2 x 89 x 70

**24 V DC / 48 V DC; 500 mA; 2 A**
**2 wire input/output**
Approvals: UL, CSA

**115 V AC/DC / 48 V DC; 500 mA**
**2 wire input**
Approvals: UL, CSA

| **Description** | Screw terminal | Spring clamp terminal | Std. pack | Screw terminal | Spring clamp terminal | Std. pack |
|---|---|---|---|---|---|---|
| **24 V DC, 500 mA** | | 80.020.4100.0 | 10 | | | |
| **24 V DC, 2 A** | | 80.020.4101.0 | 10 | | | |
| | | | | | | |
| **115 V AC/DC** | | | | | 80.020.4102.0 | 10 |
| | | | | | | |
| **230 V AC** | | | | | | |
| | | | | | | |
| **Wiring diagram, derating curve, limit curve** | **See page 488–489** | | | **See page 488–489** | | |
| | | | | | | |
| **Control side** | **Input** | **Output** | | | | |
| Nominal input voltage | 24 V DC | 24 V DC | | 115 V AC/DC | | |
| Voltage range "ON" | 10 V...53 V DC | 10 V...53 V DC | | 70 V...122 V AC/DC | | |
| Voltage range "OFF" | 0 V...5 V DC | 0 V...5 V DC | | 0 V...30 V AC / 40 V DC | | |
| Power consumption | ca. 6 mA | ca. 7 mA | | ca. 3 mA | | |
| Status display | LED Green | LED Green | | LED Green | | |
| **Load side** | | | | | | |
| Nominal output voltage | 48 V DC | 48 V DC | | 48 V DC | | |
| Min. switching voltage | 4.4 V DC | 4.4 V DC | | 4.4 V DC | | |
| Max. switching voltage | 53 V DC | 53 V DC | | 53 V DC | | |
| Min. switching current | 1 mA | 1 mA | | 0.1 mA | | |
| Max. switching current | 500 mA | 2 A | | 500 mA | | |
| On-state voltage | 1.2 V DC | 0.3 V DC | | 1.2 V DC | | |
| Pickup delay | 0.05 ms | 4 ms | | 30 ms | | |
| Dropout delay | 0.2 ms | 8 ms | | 20 ms | | |
| Switching frequency (resistive load) | 500 Hz | 10 Hz | | 10 Hz | | |
| Suppression circuit | Suppressor diode | Suppressor diode | | Suppressor diode | | |
| **General data** | | | | | | |
| Rated voltage | | | | | | |
| Isolation voltage of input/output | 3.75 kV | 2.5 kV | | 3.75 kV | | |
| Overvoltage category | III | | | III | | |
| Degree of pollution | 2 | | | 2 | | |
| Ambient temperature | 0 °C up to 50 °C | | | 0 °C up to 50 °C | | |
| Storage temperature | –40 °C up to +55 °C | | | –40 °C up to +55 °C | | |
| Protection type/mounting rail | IP 20 / TS 35 | | | IP 20 / TS 35 | | |
| Norms/specifications | VDE 0160; VDE 0106 T101 | | | VDE 0160; VDE 0106 T101 | | |
| Emitted interference/interference immunity | EN 61000-6-3; EN 61000-6-2 | | | EN 61000-6-3; EN 61000-6-2 | | |
| Wire range of screw terminal | – | | | – | | |
| Wire range of spring-clamp terminal | 24 – 12 AWG | | | 24 – 12 AWG | | |
| finely stranded | 0.14 $mm^2$ – 1.5 $mm^2$ | | | 0.14 $mm^2$ – 1.5 $mm^2$ | | |
| single core | 0.5 $mm^2$ – 2.5 $mm^2$ | | | 0.5 $mm^2$ – 2.5 $mm^2$ | | |
| | | | | | | |
| | | | | | | |
| | | | | | | |
| CSA Ex approval | Class I, Division 2, Groups A, B, C and D, T6 | | | Class I, Division 2, Groups A, B, C and D, T6 | | |
| | | | | | | |
| | | | | | | |
| **Accessories** | | Part no. | | | Part no. | |
| Plug-in jumper ($U_{max}$ = 50 V, $I_{max}$ = 2 A) | | Z8.000.0200.8 | | | Z8.000.0200.8 | |
| 8 digit marker tag, unmarked, 60 off | | Z4.242.5153.0 | | | Z4.242.5153.0 | |
| | | | | | | |



Subject to change without further notice

# flare

Overall width: 6.2 mm

Dimensions (mm): W x H x D
6.2 x 89 x 70

**230 V AC / 48 V DC; 500 mA**
**2 wire input**
Approvals: UL, CSA

**24 V DC / 230 V AC; 500 mA**
**2 wire output triac**
Approvals: UL, CSA

| **Description** | Screw terminal | Spring clamp terminal | Std. pack | Screw terminal | Spring clamp terminal | Std. pack |
|---|---|---|---|---|---|---|
| **24 V DC, 500 mA** | | | | | 80.020.4150.0 | 10 |
| **24 V DC, 2 A** | | | | | | |
| | | | | | | |
| **115 V AC/DC** | | | | | | |
| | | | | | | |
| **230 V AC** | | 80.020.4103.0 | 10 | | | |
| | | | | | | |
| **Wiring diagram, derating curve, limit curve** | **See page 488–489** | | | **See page 488–489** | | |
| **Control side** | | | | | | |
| Nominal input voltage | 230 V AC | | | 24 V DC | | |
| Voltage range "ON" | 90...250 V AC | | | 10 V...53 V DC | | |
| Voltage range "OFF" | 0...40 V AC | | | 0 V...5 V DC | | |
| Power consumption | ca. 7.5 mA | | | ca. 6 mA | | |
| Status display | LED Green | | | LED Green | | |
| **Load side** | | | | | | |
| Nominal output voltage | 48 V DC | | | 230 V AC | | |
| Min. switching voltage | 4.4 V DC | | | 12 V AC | | |
| Max. switching voltage | 53 V DC | | | 250 V AC | | |
| Min. switching current | 0.1 mA | | | 0.1 mA | | |
| Max. switching current | 500 mA | | | 500 mA | | |
| On-state voltage | 1.2 V DC | | | 1.4 V AC | | |
| Pickup delay | 30 ms | | | 10 ms | | |
| Dropout delay | 20 ms | | | 10 ms | | |
| Switching frequency (resistive load) | 10 Hz | | | 20 Hz | | |
| Minimum switchable voltage | Suppressordiode | | | Suppressordiode | | |
| Suppression circuit | Suppressor diode | | | Suppressor diode | | |
| **General data** | | | | | | |
| Rated voltage | | | | | | |
| Isolation voltage of input/output | 3.75 kV | | | 2,5 kV | | |
| Overvoltage category | III | | | III | | |
| Degree of pollution | 2 | | | 2 | | |
| Ambient temperature | 0 °C up to 50 °C | | | 0 °C up to 50 °C | | |
| Storage temperature | –40 °C up to +55 °C | | | –40 °C bis +55 °C | –40 °C up to +55 °C | |
| Protection type/mounting rail | IP 20 / TS 35 | | | IP 20 / TS 35 | | |
| Norms/specifications | VDE 0160; VDE 0106 T101 | | | VDE 0160; VDE 0106 T101 | | |
| Emitted interference/interference immunity | EN 61000-6-3; EN 61000-6-2 | | | EN 61000-6-3; EN 61000-6-2 | | |
| Wire range of screw terminal | – | | | – | | |
| Wire range of spring-clamp terminal | 24 – 12 AWG | | | 24 – 12 AWG | | |
| finely stranded | 0.14 mm² – 1.5 mm² | | | 0.14 mm² – 1.5 mm² | | |
| single core | 0.5 mm² – 2.5 mm² | | | 0.5 mm² – 2.5 mm² | | |
| | | | | | | |
| | | | | | | |
| | | | | | | |
| CSA Ex approval in range | Class I, Division 2, Groups A, B, C and D, T6 | | | Class I, Division 2, Groups A, B, C and D, T6 | | |
| | | | | | | |
| | | | | | | |
| **Accessories** | | Part no. | | | Part no. | |
| Plug-in jumper ($U_{max}$ = 50 V, $I_{max}$ = 2 A) | | Z8.000.0200.8 | | | Z8.000.0200.8 | |
| 8 digit marker tag, unmarked, 60 off | | Z4.242.5153.0 | | | Z4.242.5153.0 | |
| | | | | | | |

electronics

# Relay modules
# Solid state relays

WRS

– 24 V Input signals
– 2.5-kV separation between I/O at a creepage and clearance distance of 8mm

| | **24 V / 60 V DC / 3 A**<br>**2 wire output**<br>Approvals: cULus, CSA<br>12.5 x 80 x 64 | | | **24 V / 60 V DC / 5 A**<br>**2 wire output**<br>Approvals: cULus, CSA<br>12.5 x 80 x 59 | | |
|---|---|---|---|---|---|---|
| Dimensions (mm): W x H x D | | | | | | |
| **Description** | Type | Part no. | Std. pack | Type | Part no. | Std. pack |
| **Wieland relay system** | WRS-SSDC-60V3A | 80.020.2003.0 | 10 | WRS-SSDC-60V5A | 80.020.2004.0 | 10 |
| | | | | | | |
| | | | | | | |
| | | | | | | |
| **Wiring diagram, derating curve, limit curve** | **See page 490** | | | **See page 490** | | |
| **Control side** | | | | | | |
| Operating voltage | 24 V DC +10%/–15% | | | 24 V DC +10%/–15% | | |
| Nominal input current per input | 16 mA | | | 16 mA | | |
| Power comsumption | 0.4 W | | | 0.4 W | | |
| Parallel connection of max | 20 Relays | | | 20 Relays | | |
| **Load side** | | | | | | |
| Nominal switching voltage | 24 V DC | | | 24 V DC | | |
| Maximum switching voltage | 60 V DC | | | 60 V DC | | |
| Minimum switching voltage | 3 V DC | | | 3 V DC | | |
| Effective on-state voltage | 1.5 V DC at $I_{Nenn}$ | | | 0.5 V DC | | |
| Maximum effective current | 3 A DC (Derating) | | | 5 A DC | | |
| Minimum effective current | 20 mA | | | 0 mA | | |
| Maximum impulse current | 5 A DC (1 sec.) | | | 60 A DC (10 ms) | | |
| Maximum residual current | 1 mA at 60 V DC | | | 1 µA DC | | |
| Fusing, note $I^2t$ value | – | | | FF | | |
| Internal Suppression circuit | Z-Diode 68 V / 5 W | | | – | | |
| Maximum pickup/dropout delay | 100 µs | | | 1 ms | | |
| Maximum switching frequency | 1 kHz | | | 100 Hz | | |
| Isolation voltage of input/output | 4 k $V_{eff.}$ | | | 2.5 $kV_{eff.}$ | | |
| Capacity of input/output | 8 pF | | | 15 pF | | |
| Overvoltage category | | | | | | |
| Degree of pollution | | | | | | |
| Ambient temperature | –25 °C...Derating | | | –20 °C...Derating | | |
| Storage temperature | –25 °C...+85°C | | | –25 °C...+85°C | | |
| Mounting rail | TS 32 or TS 35 | | | TS 32 or TS 35 | | |
| Norms/specifications | | | | | | |
| Emitted interference/interference immunity | | | | | | |
| Wire range, finely stranded/single core | 0.5 $mm^2$ – 2.5 $mm^2$ / 0.5 $mm^2$ – 4 $mm^2$ / 22 – 12 AWG | | | 0.5 $mm^2$ – 2.5 $mm^2$ / 0.5 $mm^2$ – 4 $mm^2$ / 22 – 12 AWG | | |
| Location of mounting rail | horizontal | | | horizontal | | |
| | | | | | | |
| | | | | | | |
| | | | | | | |
| | | | | | | |
| | | | | | | |
| | | | | | | |
| **Accessories** | | | | | | |
| Plug-in jumper | | Z8.000.0103.4 | 10 | | Z8.000.0103.4 | 10 |
| | | | | | | |
| | | | | | | |
| | | | | | | |
| | | | | | | |
| | | | | | | |
| | | | | | | |
| | | | | | | |
| | | | | | | |



Subject to change without further notice

# WRS

– 24 V DL Input Signal

| Dimensions (mm): W x H x D | **24 V DC / 250 V AC / 4 A**<br>**2 wire output**<br>Approvals: c(UL)us, CSA<br>12.5 x 80 x 56 | | | **24 V DC / 250 V AC / 6 A**<br>**2 wire output**<br>Approvals: CSA<br>25.6 x 80 x 70 | | |
|---|---|---|---|---|---|---|
| **Description** | Type | Part no. | Std. pack | Type | Part no. | Std. pack |
| **Wieland relay system** | WRS-SSAC1-250 V4A | 80.020.2001.0 | 10 | WRS-SSAC1-250 V6A | 80.020.0004.0 | 5 |
| | | | | | | |
| | | | | | | |
| | | | | | | |
| **Wiring diagram, derating curve, limit curve** | **See page 490–491** | | | **See page 490–491** | | |
| **Control side** | | | | | | |
| Operating voltage | 24 V DC +10%/–15% | | | 24 V DC +15%/–15% | | |
| Nominal input current per input | 20 mA | | | 15 mA | | |
| Power consumption | 0,5 W | | | 0.4 W | | |
| Parallel connection of max | 20 Relays | | | 20 Relays | | |
| **Load side** | | | | | | |
| Nominal switching voltage | 250 V AC | | | 24 V–250 V AC | | |
| Maximum switching voltage | 280 V AC | | | | | |
| Minimum switching voltage | 48 V AC | | | | | |
| Peak off-state voltage | 1200 Vs | | | 600 Vs | | |
| Critical rate of rise of voltage | 500 V/µs | | | 500 V/µs | | |
| Effective on-state voltage | 1.4 V | | | 1.6 V | | |
| Maximum effective current | 4 A AC | | | 6 A AC | | |
| Minimum effective current | 60 mA | | | 60 mA | | |
| Maximum impulse current | 250 A AC (20ms) | | | 10 A AC | | |
| Maximum residual current | 0.1 mA | | | 0.1 $mA_{eff.}$ | | |
| Power factor φ | > 0,5 | | | > 0,5 | | |
| Zero sequence voltage switch | yes | | | yes | | |
| $I^2t$ value | 260 $A^2s$ | | | 260 $A^2s$ | | |
| Fusing, note I2t value | FF | | | FF | | |
| Suppression circuit | | | | Varistor | | |
| Maximum pickup/dropout delay | 10 ms | | | 100 ms | | |
| Maximum switching frequency | 15 Hz | | | 15 Hz | | |
| Isolation voltage of input/output | 4 $kV_{eff.}$ | | | 4 $kV_{eff.}$ | | |
| Capacity of input/output | 10 pF | | | 10 pF | | |
| Overvoltage category | | | | | | |
| Degree of pollution | | | | | | |
| Ambient temperature | –25 °C...Derating | | | –25 °C...Derating | | |
| Storage temperature | –25 °C...+85°C | | | –25 °C...+85°C | | |
| Mounting rail | TS 32 or TS 35 | | | TS 32 or TS 35 | | |
| Norms/specifications | | | | | | |
| Emitted interference/interference immunity | | | | | | |
| Wire range, finely stranded/single core | 0.5 $mm^2$ – 2.5 $mm^2$ / 0.5 $mm^2$ – 4 $mm^2$/ 22 – 12 AWG | | | 0.5 $mm^2$ – 2.5 $mm^2$ / 0.5 $mm^2$ – 4 $mm^2$/ 22 – 12 AWG | | |
| Location of mounting rail | horizontal | | | horizontal | | |
| | | | | | | |
| **Accessories** | | | | | | |
| Plug-in jumper | | Z8.000.0103.4 | 10 | | Z8.000.0103.4 | 10 |
| | | | | | | |
| | | | | | | |
| | | | | | | |
| | | | | | | |
| | | | | | | |
| | | | | | | |
| | | | | | | |

# Relay modules
# Module boards

M-PB

Relay module boards
– 1 relay
– 4 relay
– 8 relay

The module boards are supplied without solid-state relays or miniature fuses

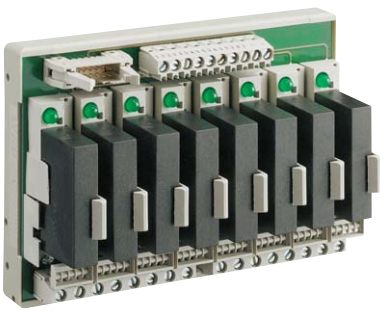

Dimensions (mm): W x H x D

| | Module board 1 relay<br>26 x 96 x 70,3 | | | Module board 4/8 relays<br>70/138 x 96 x 70,3 | | |
|---|---|---|---|---|---|---|
| **Description** | Type | Part no. | Std. pack | Type | Part no. | Std. pack |
| **1 relay module boards** | M-PB 1 SR | 87.220.1353.3 | 2 | | | |
| **4 relay module boards** | | | | M-PB 4 SP | 87.220.0753.3 | 1 |
| **8 relay module boards** | | | | M-PB 8 SP | 87.220.0853.3 | 1 |
| **Wiring diagram, derating curve, limit curve** | **See page 492–493** | | | **See page 492–493** | | |
| **Switching variations** | | | | | | |
| Input without positive/negative switching | + / – | | | | | |
| Output with positive/negative switching | + / – | | | + | | |
| **Caution:** Please allow for the voltage drop at the LED | | | | | | |
| **Switching behaviour** | | | | | | |
| See technical data of input/output relays | | | | | | |
| on pages 478 to 481 | | | | | | |
| **General data** | | | | | | |
| Voltage drop at the LED | 2 V | | | 2 V | | |
| Ambient temperature | –30 °C...+40 °C | | | –30 °C...+40 °C | | |
| Storage temperature | –25 °C...+85 °C | | | –25 °C...+85 °C | | |
| IDC header DIN 41651 | – | | | 8 relay, 10 pole | | |
| Miniature fuse holder | 5 x 20 mm | | | 5 x 20 mm | | |
| Wire diameter of solid state relay connection | max 1.05 mm | | | max 1.05 mm | | |
| Wire range, finely stranded/single core | 0.5 $mm^2$ – 2.5 $mm^2$ / 0.5 $mm^2$ – 4 $mm^2$ / 22 – 12 AWG | | | 0.5 $mm^2$ – 2.5 $mm^2$ / 0.5 $mm^2$ – 4 $mm^2$ / 22 – 12 AWG | | |
| Mounting rail | TS 32 or TS 35 | | | | | |
| Location of mounting rail | horizontal | | | horizontal | | |
| **Accessories** | | | | | | |
| Solid state relay input (See page 478) | M-IDC24 | Z5.580.8100.0 | 10 | | | |
| Solid state relay input (See page 478) | M-IAC24 | Z5.580.7800.0 | 10 | | | |
| Solid state relay output (See page 480) | ODC 3–32 V / 3–60 V | Z8.000.0169.8 | 10 | ODC 3–32 V / 3–60 V | Z8.000.0169.8 | 10 |
| Solid state relay output (See page 481) | ODC 3–32 V / 3–200 V | Z8.000.0169.9 | 10 | ODC 3–32 V / 3–200 V | Z8.000.0169.9 | 10 |
| Solid state relay output (See page 480) | OAC 3–32 V / 24–280 V | Z8.000.0156.9 | 10 | OAC 3–32 V / 24–280 V | Z8.000.0156.9 | 10 |



Technische Änderungen vorbehalten

# M-PB

The module boards are supplied without solid state relays or miniature fuses.

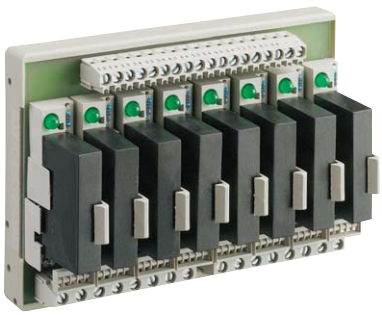

**Important notice**
In the case of multiple modules (2 changeover contacts), the outputs must be supplied from the same phase (e.g. L1)

## Module board 4/8 relay

Dimensions (mm): W x H x D
70/138 x 96 x 70.3

| Description | Type | Part no. | Std. pack |
|---|---|---|---|
| **Module boards 1 relay** | | | |
| **Module boards 4 relay** | M-PB 4 SG | 87.220.1453.3 | 1 |
| **Module boards 8 relay** | M-PB 8 SG | 87.220.1553.3 | 1 |
| | | | |
| | | | |
| **Wiring diagram, derating curve, limit curve** | **See page 492–493** | | |
| **Coil circuit** | | | |
| Input without positive/negative switching | – | | |
| Output with positive/negative switching | + / – | | |
| | | | |
| **Caution:** Please allow for the voltage drop at the LED | | | |
| | | | |
| **Switching behaviour** | | | |
| See technical data of input/relays | | | |
| on pages 478 to 481 | | | |
| **General data** | | | |
| Voltage drop at the LED | 2 V | | |
| Ambient temperature | –30 °C...+40 °C | | |
| Storage temperature | –25 °C...+85 °C | | |
| IDC header DIN 41651 | – | | |
| Miniature fuse holder | 5 x 20 mm | | |
| Wire diameter of solid state relay connection | maximal 1,05 mm | | |
| Wire range, finely stranded/single core | 0.5 $mm^2$ – 2.5 $mm^2$ / 0.5 $mm^2$ – 4 $mm^2$ / 22 – 12 AWG | | |
| Mounting rail | TS 32 or TS 35 | | |
| Location of mounting rail | horizontal | | |
| | | | |
| | | | |
| **Accessories** | | | |
| Solid state relay input (See page 478) | M-IDC24 | Z5.580.8100.0 | 10 |
| Solid state relay input (See page 478) | M-IAC24 | Z5.580.7800.0 | 10 |
| | | | |
| Solid state relay output (See page 480) | ODC 3–32 V / 3–60 V | Z8.000.0169.8 | 10 |
| Solid state relay output (See page 481) | ODC 3–32 V / 3–200 V | Z8.000.0169.9 | 10 |
| Solid state relay output (See page 480) | OAC 3–32 V / 24–280 V | Z8.000.0156.9 | 10 |

electronics

# Relay modules
# Solid state relays

## M-PB

For use with M-PB relay module boards

Dimensions (mm): W x H x D
10.2 x 26.3 x 43.2

| Description | Type | Part no. | Std. pack | Type | Part no. | Std. pack |
|---|---|---|---|---|---|---|
| **Solid state relay** | M-IAC 24 | Z5.580.7800.0 | 10 | M-IDC 24 | Z5.580.8100.0 | 10 |
| | | | | | | |
| **Pin base input** | **See page 483** | | | **See page 483** | | |
| **Pin base output** | **See page 483** | | | **See page 483** | | |
| | | | | | | |
| | | | | | | |
| | | | | | | |
| | | | | | | |
| | | | | | | |
| **Wiring diagram, derating curve, limit curve** | **See page 492–493** | | | **See page 492–493** | | |
| **Control side** | | | | | | |
| Nominal operating voltage | 240 V AC | | | | | |
| Maximum operating voltage | 280 V AC/DC | | | 32 V DC | | |
| Minimum operating voltage | 180 V AC/DC | | | 3,3 V DC | | |
| Nominal input current | 5 mA AC | | | 32 mA DC | | |
| Breaking current | 1.5 mA AC | | | 1 mA DC | | |
| Resistance | 75 kΩ | | | 1 kΩ | | |
| | | | | | | |
| Maximum voltage without reaction at output | 50 V AC | | | 2 V DC | | |
| Maximum current without reaction at output | 2 mA AC | | | 1,5 mA DC | | |
| **Load side** | | | | | | |
| Nominal switching voltage | 24 V DC | | | 24 V DC | | |
| Maximum switching voltage | 30 V DC | | | 30 V DC | | |
| Minimum switching voltage | 20 V DC | | | 20 V DC | | |
| Maximum current | 16 mA DC | | | 16 mA DC | | |
| Leakage current | 10 µA DC | | | 10 µA DC | | |
| Logic voltage | 30 V DC | | | 30 V DC | | |
| Logic current | 50 mA DC | | | 50 mA DC | | |
| Logic leakage current | 10 µA DC | | | 10 µA DC | | |
| Logic voltage drop | 200 mV DC | | | 100 mV DC | | |
| Maximum pickup/dropout delay | 20 ms / 30 ms | | | 1 ms / 1 ms | | |
| Maximum switching frequency | 10 Hz | | | 1 kHz | | |
| Mains frequency | 47–63 Hz | | | – | | |
| Isolation voltage of input/output | 4 $kV_{eff.}$ (1 sec.) | | | 4 $kV_{eff.}$ (1sec.) | | |
| Capacity of input/output | 8 pF | | | 8 pF | | |
| Overvoltage category | | | | | | |
| Degree of pollution | | | | | | |
| Ambient temperature | –30 °C...+40 °C | | | –30 °C...+40 °C | | |
| Storage temperature | –40 °C...+100 °C | | | –40 °C...+100 °C | | |
| | | | | | | |
| Norms/specifications | | | | | | |
| Emitted interference/interference immunity | | | | | | |
| **Accessories** | | | | | | |
| Pin base | See pin base on page 485 | | | See pin base on page 485 | | |
| | | | | | | |
| | | | | | | |
| | | | | | | |
| | | | | | | |
| | | | | | | |
| | | | | | | |



Subject to change without further notice

# M-PB

Dimensions (mm): W x H x D
16.3 x 22.3 x 63.8

## Pin base

| Description | Type | Part no. | Std. pack | |
|---|---|---|---|---|
| **Solid state relay** | | | | |
| | | | | |
| **Pin base input** | SR-I5 | Z1.000.4753.0 | 80 | |
| **Pin base output** | SR-O4 | Z1.000.9153.0 | 80 | |
| | | | | |
| Voltage | 250 V AC | | | |
| Current | 5 A AC | | | |
| | | | | |
| | | | | |
| **Dimensions** | **See page 492–493** | | | |

electronics

# Relay modules
# Solid state relays

## M-PB

For use with M-PB relay module boards

**230 V AC / 3 A**
**2 wire output**
10.2 x 25.9 x 43.2

**60 V DC / 3 A**
**2 wire output**
10.2 x 26.3 x 43.2

Dimensions (mm): W x H x D

| **Description** | Type | Part no. | Std. pack | Type | Part no. | Std. pack |
|---|---|---|---|---|---|---|
| **Solid state relay** | OAC 3-32 V/24-280 V | Z8.000.0156.9 | 10 | ODC 3-32 V/3-60 V | Z8.000.0169.8 | 10 |
| | | | | | | |
| | | | | | | |
| | | | | | | |
| **Wiring diagram, derating curve, limit curve** | **See pages 492–493** | | | **See pages 492–493** | | |
| **Coil circuit** | | | | | | |
| Operating voltage | 3 – 32 V DC | | | 3 – 32 V DC | | |
| Nominal input current | 1 – 22 mA | | | 3 – 32 mA | | |
| Minimum closing voltage | 3 V DC | | | 3 V DC | | |
| Maximum opening voltage | 1 V DC | | | | | |
| Maximum reverse voltage | 6 V DC | | | 6 V DC | | |
| Resistance | 1.5 kΩ | | | 1 kΩ | | |
| | | | | | | |
| **Switching behaviour** | | | | | | |
| Switching voltage | 24 – 280 V AC | | | 3 – 60 V DC | | |
| Peak off-state voltage | 600 Vs | | | 60 V DC | | |
| Critical rate of rise of voltage | 100 V/µs | | | – | | |
| Maximum effective on-state voltage | 1.6 V | | | 1,5 V | | |
| Maximum effective current | 3 A | | | 3 A (5 A / 1 sec.) | | |
| Minimum effective current | 50 mA | | | – | | |
| Maximum impulse current (20 ms) | 90 Amp | | | – | | |
| Maximum leakage current | 5 mA | | | 1 mA | | |
| Power factor φ | ≥ 0.5 | | | – | | |
| Zero sequence voltage switch | yes | | | – | | |
| $I^2t$ value | 42 $A^2s$ | | | – | | |
| Fusing of solid state relay | FF 2.5 A | | | FF 2,5 A | | |
| Fusing of load circuit | F 3.15 A | | | F 3,15 A | | |
| Maximum pickup/dropout delay | 11 ms | | | 100 µs / 1 ms | | |
| Maximum switching frequency | – | | | 1 kHz | | |
| Isolation voltage of input/output | 4 $kV_{eff.}$ | | | 4 $kV_{eff.}$ | | |
| Capacity of input/output | 8 pF | | | 8 pF | | |
| Overvoltage category | | | | | | |
| Degree of pollution | | | | | | |
| Ambient temperature | –20 °C...Derating | | | –40 °C...Derating | | |
| Storage temperature | –40 °C...+100 °C | | | –40 °C...+100 °C | | |
| Norms/specifications | | | | | | |
| Emitted interference/interference immunity | | | | | | |
| | | | | | | |
| **Accessories** | | | | | | |
| Pin base | See pin base on page 485 | | | See pin base on page 485 | | |



Subject to change without further notice

# M-PB

Dimensions (mm): W x H x D
10.2 x 26.3 x 43.2

**200 V DC / 1A**
**2 wire output**

| **Description** | Type | Part no. | Std. pack |
|---|---|---|---|
| **Solid state relay** | ODC 3-32 V/3-200 V | Z8.000.0169.9 | 10 |
| | | | |
| | | | |
| | | | |
| **Wiring diagram, derating curve, limit curve** | **See pages 492–493** | | |
| **Coil circuit** | | | |
| Operating voltage | 3–32 V DC | | |
| Nominal input current per input | 3–32 mA | | |
| Minimum closing voltage | 3 V DC | | |
| Maximum opening voltage | 1 V DC | | |
| Maximum reverse voltage | 6 V DC | | |
| Resistance | 1 kΩ | | |
| | | | |
| **Switching behaviour** | | | |
| Nominal switching voltage | 3–200 V DC | | |
| Peak off-state voltage | 200 V DC | | |
| Critical rate of rise of voltage | – | | |
| Maximum effective on-state voltage | 1.5 V | | |
| Maximum effective current | 1 A (2 A / 1 sec.) | | |
| Minimum effective current | – | | |
| Maximum impulse current | – | | |
| Maximum residual current | 1 mA | | |
| Power factor φ | – | | |
| Zero sequence voltage switch | – | | |
| $I^2t$ value | – | | |
| Fusing, note I2t value | FF 2.5 A | | |
| | F 1.25 A | | |
| Maximum pickup/dropout delay | 100 µs / 1 ms | | |
| Maximum switching frequency | 1 kHz | | |
| Isolation voltage of input/output | 4 $kV_{eff.}$ | | |
| Capacity of input/output | 8 pF | | |
| Overvoltage category | | | |
| Degree of pollution | | | |
| Ambient temperature | –40 °C...Derating | | |
| Storage temperature | –40 °C...+100 °C | | |
| Norms/specifications | | | |
| Emitted interference/interference immunity | | | |
| | | | |
| **Accessories** | | | |
| Pin base | See pin base on page 485 | | |

electronics

## Wiring diagrams: *flare* – Solid state relays

### 24 V/48 V DC; 500 mA; 2 A

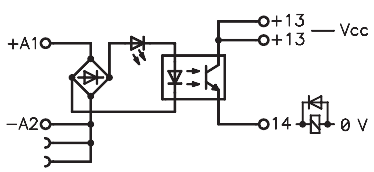


### 115 V AC/DC / 48 V DC; 500 mA

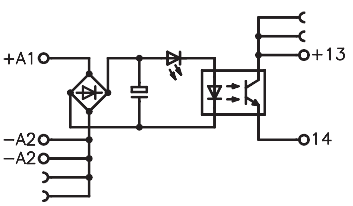


### 230 V AC / 48 V DC; 500 mA

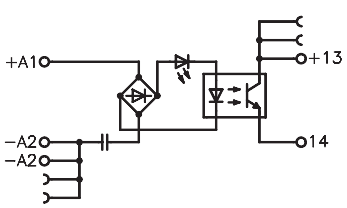


### 24 V DC / 230 V AC; 500 mA

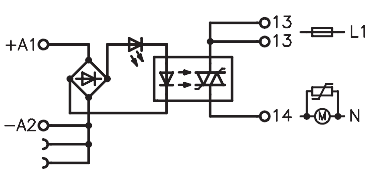


### Derating: Solid State Relais

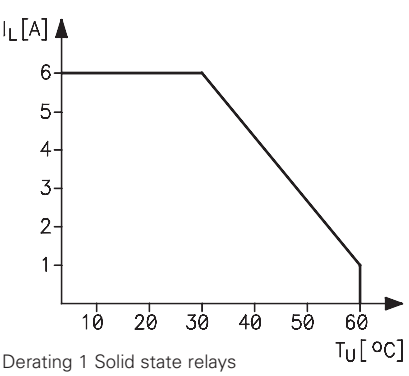


Derating 1 Solid state relays



Subject to change without further notice

## Dimensions of *flare* – Relays

### Housing with spring clamp terminals

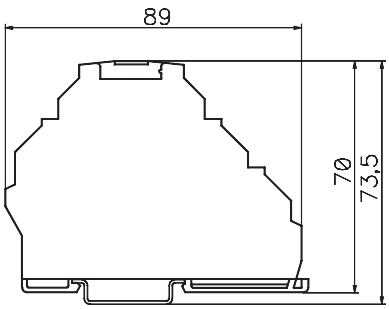

## WRS Solid state relays

### Wiring diagram

**WRS-SSDC-60 V 3 A**

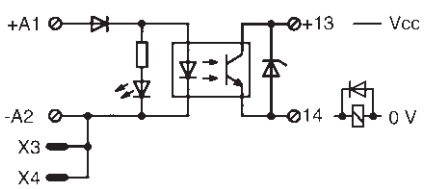


**WRS-SSDC-60 V 5 A**

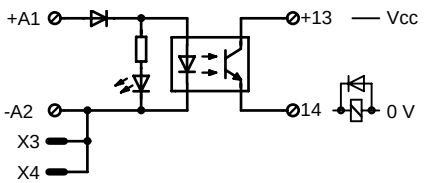


### Derating

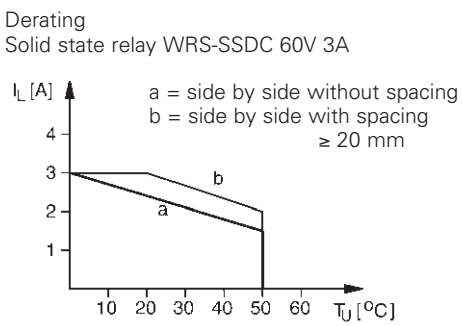


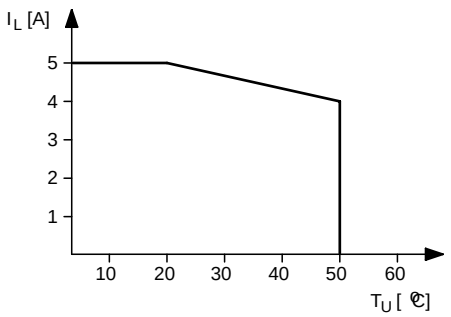


### Dimensions

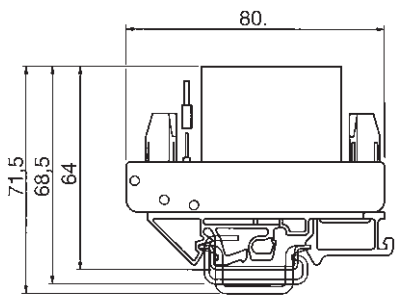


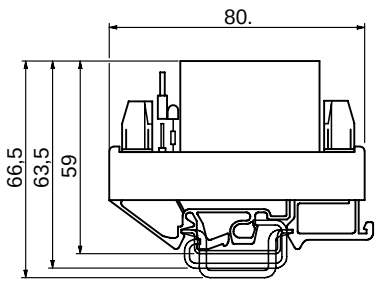




Subject to change without further notice

# WRS

## Wiring diagram

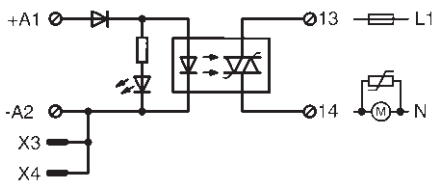


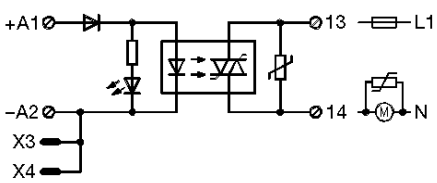


## Derating

### WRS-SSAC1-250 V 4 A

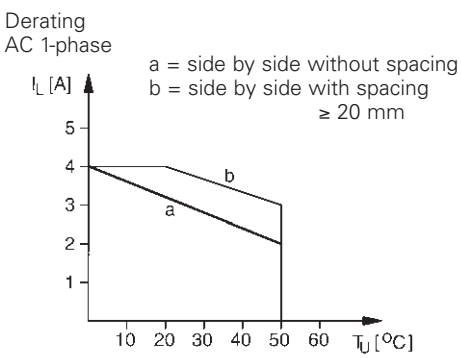


### WRS-SSAC1-250 V 6 A

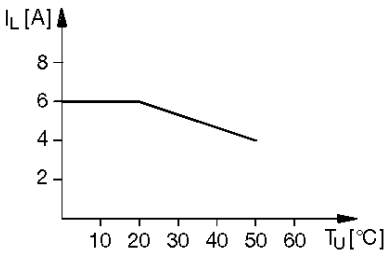


## Dimensions

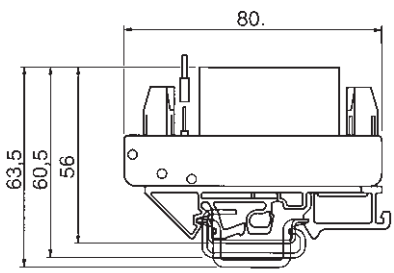


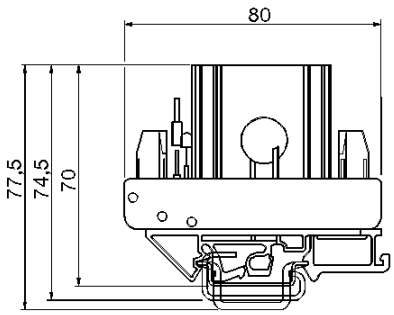


electronics

## Wiring diagrams: M-PB module boards

### M-PB 1SR

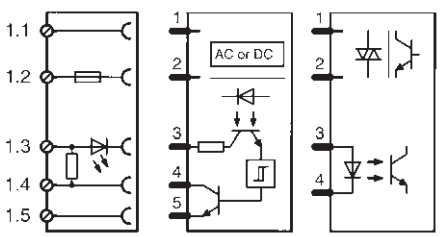


### M-PB 4/8 SP

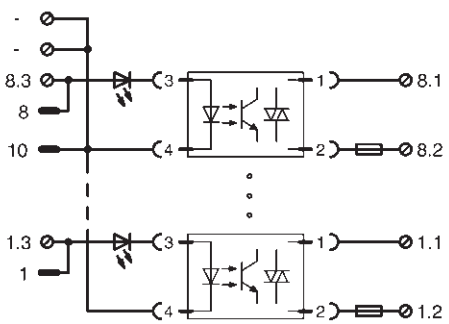


### M-PB 4/8 SG

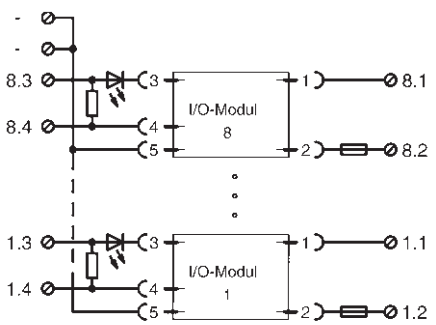


### Dimensions of module boards

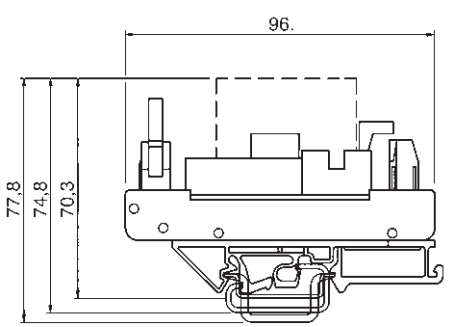


## Wiring diagrams: M-PB Solid state relays

### M-IAC 24

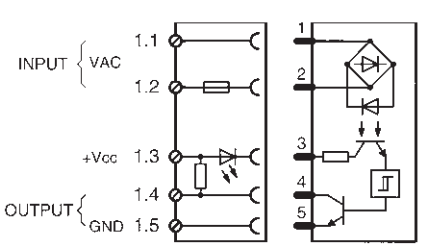


### M-IDC 24

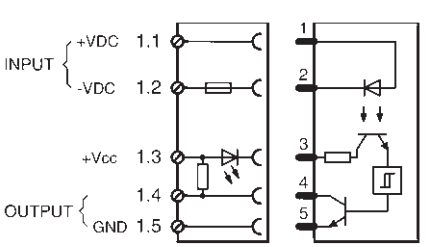


## Dimensions

### M-IAC 24 / M-IDC 24

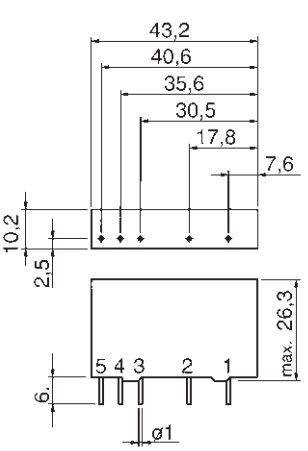




Subject to change without further notice

# M-PB

## Wiring diagrams + Derating: M-PB Solid state relays

### OAC 3–32 V/24–280 V

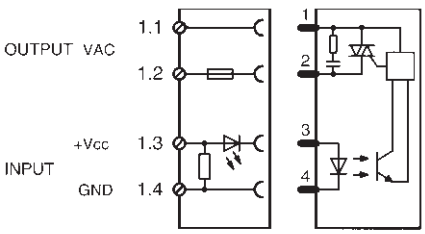


### ODC 3–32 V/3–60 V

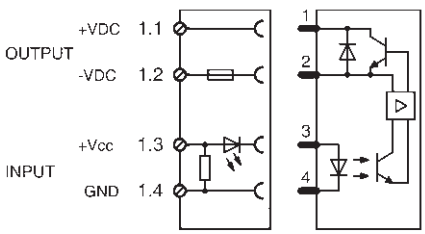


### ODC 3–32 V/3–200 V

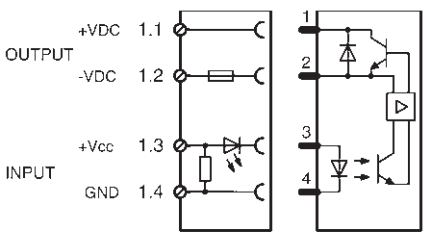


## Derating

### Output 230 V AC

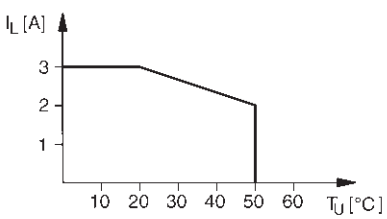


### Output 60 V DC

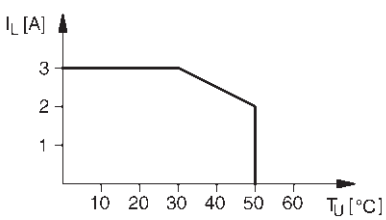


### Output 200 V DC

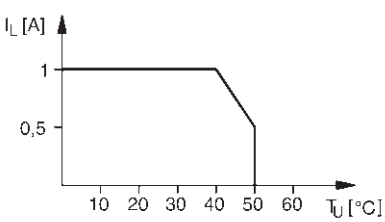


## Dimensions

### OAC 3–32 V/24–280 V

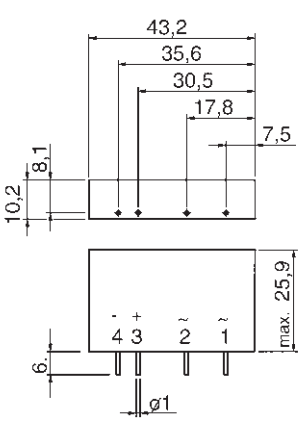


### ODC 3–32 V/3–60 V
### ODC 3–32 V/3–200 V

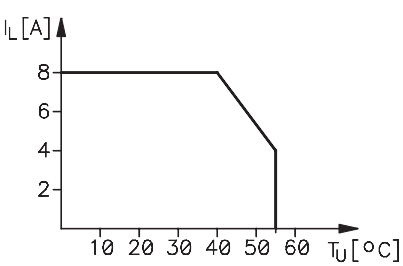


### Pin base

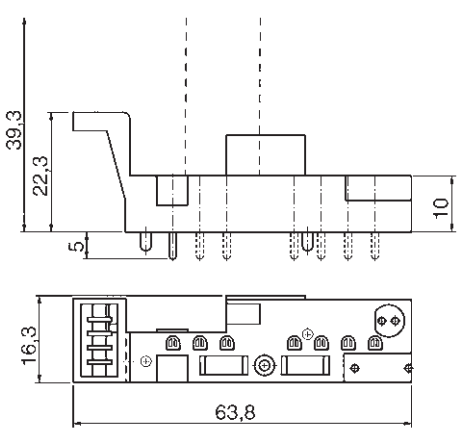


electronics

# Analog measurement technology

analog

**Pt100 (RTD)/TC**
**Sensor Amplifiers**
**Analog conversion module**
**Analog isolating module**
**Multifunctional signal conditioning**
**Measuring transducer with 3 way isolation**
**Isolating set point amplifiers**
**Isolating set point amplifiers – potential free**
**Constant voltage source**

Analog measurement technology offers

- overall modules widths from 12,5 mm
- one modular system
- modules with screw and spring clamp terminals
- Isolating modules with 3 way isolation
- freely configurable modules
- freely adjustable input ranges for RTD Pt100/Pt1000
- modules with CJC compensation
- modules with "Smart Sense" function

All Wieland Components which require general certification are certified, and identified with the logo.

electronics

# Electronic components

## Analog measurement technology

# Measurement and control technology

# dipos

**Wieland signal conditioners for measurement and control technology.**

The basis of modern automation is the preparation and transfer of physical variables such as temperature, pressure, speed or humidity. These variables are recorded by sensors which use interfaces to simultaneously convert them into electrically measurable, standardised signals. The most frequently used signals are 1-5 V, 0 – 10 V, ±10 V, 0–20 mA and 4–20 mA. In the reverse, controller modules or control systems supply these standardised signals as variables for actuators and indicators. There is often a distance between the recording and processing sites, whereby the transmission link invariably lies in a hostile industrial environment.

Wieland signal conditioners offer a reliable solution for the transmission of these relatively weak signals. Resistive, inductive or capacitive interference or earth loops are ruled out due to advanced technology. They ensure that the analog standard signals are electrically isolated. The signal input and output are supplied by integrated DC/DC transformers which are electrically isolated from the mains.

Apart from isolation for standardised signals, temperature input modules for Pt100/RTD sensors and thermocouples are also available, with or without electrical isolation. All the modules are intended for installation on standard DIN rail.

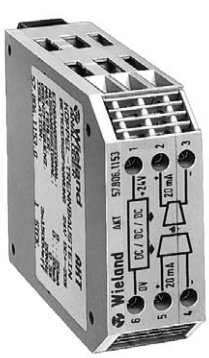

***dipos* signal conditiners offer the following benefits:**

- ❒ Overall widths from 12,5 mm
- ❒ Modular system
- ❒ Permanent wiring via plug-in modules
- ❒ Settings can be secured against unauthorised access via a sealed cover
- ❒ 4 kV insulation voltage
- ❒ 100% earth connection if required
- ❒ Signals or supply voltages can be jumpered
- ❒ Screw or spring-clamp terminals
- ❒ Labelling of individual channels as well as groups

**Product ranges**

***AKB, AKT***

Signal conditioners for standardised signals that can be mounted on TS 35 rails, electrically isolated or with 3-way isolation.

***UET, dipos*** UET

Isolating set point amplifiers for generating threshold-dependent switching points. The respective threshold value is represented via an LC display, depending on the module. The measured input value is potential-free.

***cores, dipos*** Pt

RTD Signal conditioner modules for Pt100, Pt1000 and Ni temperature sensors.

**The following types are available:**

- ❒ One temperature input range/one standard signal output
- ❒ Two defined temperature input ranges/two standard signal outputs, input and output characteristics can be freely selected
- ❒ Four freely selectable temperature input ranges/two standard signals output with or without detection of wire breakage
- ❒ Freely adjustable temperature input ranges via DIP switches and standard signal outputs
- ❒ Software configurable module for temperature input ranges and standard signals outputs

***dipos*** TC

Temperature transformer isolator modules for thermocouple elements sensors of type J and K.

**The following types are available:**

- ❒ One temperature input range/one standard signal output
- ❒ Two defined temperature input ranges/two standard signal outputs, input and output characteristics can be freely selected

**2, 3 or 4 wire connection technology for RTD/Pt sensors**

The range provided by Wieland offers devices for all connection technologies. The appropriate technique is used, depending on the accuracy requirement. The individual measurement types are described in detail as follows.

The obvious benefit of a 2-wire connection lies in the minimum wiring costs. It should however be noted that greater errors can occur during measurement using this method. In the case of a Pt100 sensor, an additional resistance of only one ohm is sufficient for an error of 2.5°C. This error acts as an offset (zero displacement). This type of increase in resistance can be caused by cable resistances, contact resistances, soldered connections, plugs etc. In order to compensate for these errors, the Wieland modules offer a zero balance. This does not however prevent errors from occurring during operation that are caused by variations in the ambient temperature.

In practice, a 2-wire connection is only recommended if the application does not

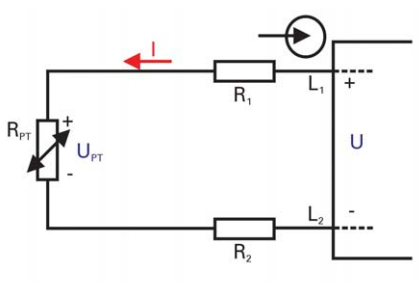


require a high level of accuracy.

In the case of a 3-wire connection, one of the sensor cables is used for measuring the cable and contact resistances. The influence of the additional resistances can thus be largely eliminated. This however only applies under one condition which is often not observed:

**The resistances of the three cables and the respective connectors must match exactly.**

A differential of 0.39 ohm already causes an error of 1 degree (Pt100). Only the respective state can be equalized by carrying out an adjustment during commissioning. It is not possible to

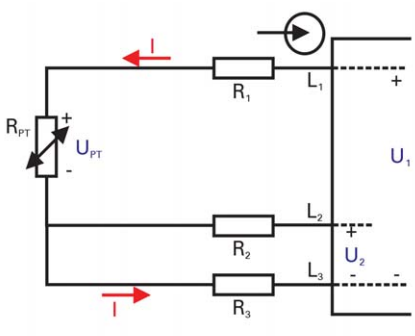


remedy the sources of error that are caused by temperature.

In the case of 4-wire technology, two cables take over the temperature measurement and two further cables measure at high resistance the voltage drop that arises via the resistance-type sensor.

All the effects caused by contact or cable resistances are fully eliminated.

The error is maximum 0.004% per ohm. There is practically no influence produced on the output variable. It is irrelevant if the resistances have different values and are subjected to different conditions due

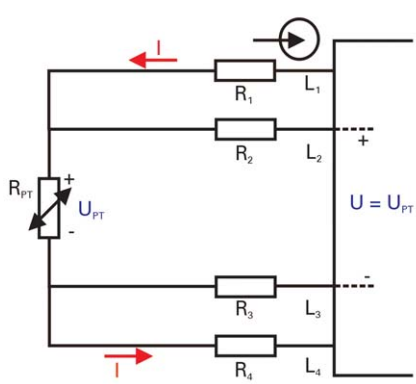


to the application.

# Analog measurement technology
# RTD (Pt100)/TC

dipos

### The influence of the insulation resistance on the temperature measurement

The design of RTD sensors can lead to measuring errors. This is independent of the type and manufacturer. One of the most frequent sources of error is the insulation in the sensor. If it is not sufficient, it can seriously impair the measurement. Causes of a low-resistance insulation can be heat, vibration, physical, chemical or radioactive influences.

### Measurement with Pt100

The Pt100 element is a low-resistance sensor. If the insulation resistance is too low, the measurement is influenced.

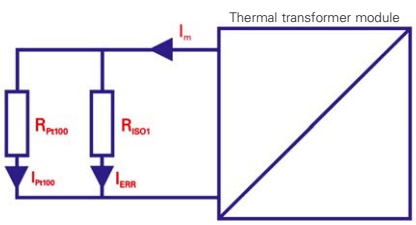


The diagram shows the electrical circuit diagram of the Pt100, connected to a RTD signal conditioner. Apart from the current flowing over the sensor, a minor current normally also flows over the insulation resistance $R_{ISO1}$. If the insulation resistance falls, the proportion that flows over the insulation resistance also naturally rises. Due to the constant current that is supplied by the RTD signal conditioner, the voltage drop is also reduced. This produces a measured temperature value that is too low, regardless of whether the RTD signal conditioner is operated with or without electrical isolation. During operation without electrical isolation, leakage current can however be caused between the sensor and earth if the insulation resistance is too low. This also leads to a lower temperature display. An isolated RTD signal conditioner rules this out.

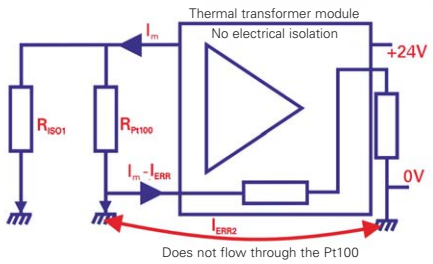


### Measurement via thermocouples

Limited by the principle of the thermocouples, other errors arise due to the extremely small insulation resistances. The EMF (electromotive force) of thermocouples is not particularly susceptible in the event of a low insulation resistance. The problem lies in the fact that a new measuring point occurs due to the low insulation resistance. If this measuring point is found in the vicinity of the existing point, the influence is negligible. However, if it is located where there is a temperature differential to the measuring point, the measuring error can be considerable. As a

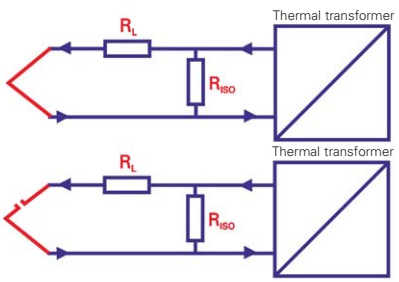


result, it is almost impossible to diagnose a break in the sensor.
The thermocouple signal conditioner ***dipos*** PROG is microprocessor-controlled and carries out measurements and checks beyond the standard. One of these checks is the display of the insulation resistance of the connected sensor. This function is called "Smart Sense". To implement this function, the sensor must be provided with an additional conductor. In the case of TC sensors, a special sensor is required which contains an additional conductor that is not used for temperature measurement.

Under certain conditions, it is possible to

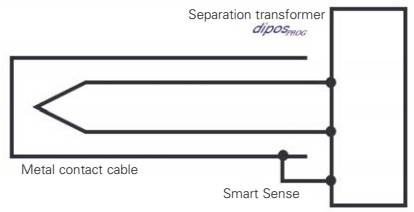


use the shield of the cable as the following diagram indicates:

An excessively low insulation resistance is indicated with a flashing LED at the module and the output signal is set to a preselected value. Smart sense not only monitors the sensor state but also the connections from the sensor to the thermal transformer module. This guarantees the complete control of the measuring point up to the thermocouple signal conditioner.

# dipos

- Mounting width 12,5 mm
- 3 and 4 wire technology
- Current output can be toggled (0...20 mA and 4...20 mA)
- Adjustable zero/span
- Detection of wire breakage
- Overload signal at the output, red LED

Dimensions (mm) W x H x D
12.5 x 100 x 100

## RTD Signal Conditiner for Pt100 sensors

Approvals: UL, CSA in preparation

| Description | Output signal | Type | Part no. | Std. pack |
|---|---|---|---|---|
| **dipos Pt100 RTD measuring transducer** | | | | |
| in 3 and 4 wire technology for Pt100 Sensors | | | | |
| | 0...10 V | 3 wire | 82.011.30XX.0 | 1 |
| | 0...10 V | 4 wire | 82.011.40XX.0 | 1 |
| | 0(4(*))...20 mA | 3 wire | 82.011.37XX.0 | 1 |
| | 0(4(*))...20 mA | 4 wire | 82.011.47XX.0 | 1 |
| | 0...10 V / 0(4(*))...20 mA | 3 wire | 82.011.38XX.0* | 1 |
| | 0...10 V / 0(4(*))...20 mA | 4 wire | 82.011.48XX.0* | 1 |
| | (*) Supplied state | | | |
| **Wiring diagram, dimensions** | | **See page 501** | | |
| **Technical data** | | | | |
| **Measured input** | | | | |
| Input | | Pt100 in accordance with IEC 60751 | | |
| Temperature ranges | | –100...+100 °C / –50...+50 °C | | |
| | | 0...100 °C / 150 °C / 200 °C / 300 °C / 400 °C / 500 °C | | |
| Supply current (Pt100) | | ca. 1 mA | | |
| | | | | |
| **Measured output** | | | | |
| Output signal | | 0...10 V, 0(4)...20 mA | | |
| Maximum load for voltage signal | | 5 mA | | |
| Load for current signal | | 0...500 Ω (no load error) | | |
| Output signal in event of wire breakage | | | | |
| Voltage output: | | ca. 13 V | | |
| Current output: | | ca. 26 mA | | |
| | | | | |
| **Measuring accuracy** | | | | |
| Transmission error | | ≤ 0.2 % of final value (at 20 °C ambient temperature) | | |
| Max. temperature co-efficient | | 100 ppm/K (ref. final value) | | |
| Load error (deviation at 100 Ω load) | | < 0.02 %/100 Ω | | |
| Zero/span adjustment range | | ca. 3 % Approx. of scope of measuring range | | |
| **General data** | | | | |
| Supply data | | 24 V DC +25 % / –20 %, polarised | | |
| Power consumption | | ca. 15 mA + output current | | |
| Ambient temperature range | | 0...60 °C (100 % capacity utilisation of device, series connected | | |
| Norms, specifications | | DIN EN 50178, EMC guideline 89/336/EWG | | |
| **Isolation** | | | | |
| **EMC** | | | | |
| Emitted interference | | EN 60715/Kl. B, EN 61000-6-1, CISPR 222/Kl. B | | |
| Interference immunity | | EN 61000–4–2/3/4/5/6 | | |
| **Accessories** | | | | |
| Module board, overall width of 12.5mm, 4 connections per side | | | | |
| Screw terminal | | | 80.060.0010.1 | 1 |
| Spring clamp terminal | | | 80.060.0011.1 | 1 |
| Coding branch | | | Z5.563.0453.0 | 25 |
| Plug-in jumper | | | Z8.000.0229.5 | 50 |
| Large marker tag, white, blank | | | 04.249.4053.0 | 500 |
| Small marker tag | | | | |
| red, blank | | | 04.249.1053.0 | 500 |
| blue, blank | | | 04.249.1553.0 | 500 |
| white, blank | | | 04.249.2053.0 | 500 |

| Part no. key for input temperature range | | |
|---|---|---|
| XX = | 01 | 0...100 °C** |
| | 02 | 0...200 °C |
| | 03 | 0...300 °C |
| | 04 | 0...400 °C |
| | 05 | 0...500 °C** |
| | 20 | –50...+50 °C** |
| | 21 | –100...+100 °C** |
| | 31 | 0 ...150 °C |
| | 40 | –50...+50 °C(*) / –100...+100 °C |
| | 41 | 0...100 °C(*) / 0...500 °C |
| **Ordering example:** | | |
| Pt100 3 wire, Input 0...400 °C, Output 0...10 V | | |
| Part no. | 82.011.3004.0 | |
| * versions only avalable with ** temperature ranges | | |

electronics

# Analog measurement technology
## TC

dipos

- Mounting width 12.5 m
- CJC incorporated
- Current output can be toggled (0...20 mA and 4...20 mA)
- Adjustable zero/span
- Detection of wire breakage
- Overload signal at the output, red LED

Dimensions (mm) W x H x D
12.5 x 100 x 100

## Thermocouple Signal Conditioner Type J, K

Approvals: Ⓤ, CSA in preparation

| Description | Output signal | Type | Part no. | Std. pack |
|---|---|---|---|---|
| ***dipos* Signal Conditioner TC** | | | | |
| for Type J and K thermocouples | | | | |
| | 0...10 V / 0(4(*))...20 mA | Type J | 82.021.08XX.0 | 1 |
| | 0...10 V / 0(4(*))...20 mA | Type K | 82.021.18XX.0 | 1 |
| **Wiring diagram, dimensions** | | **See page 501** | | |
| **Technical data** | | | | |
| **Measured input** | | | | |
| Input | | TypeJ (Fe-CuNi) or Type K (NiCr-Ni) in accordance with | | |
| Temperature ranges | | 0...150/300/600/1200 °C | | |
| **Measured output** | | | | |
| Output signal | | 0...10 V, 0(4)...20 mA | | |
| Maximum load for voltage signal | | 5 mA | | |
| Load for current signal | | 0...500 Ω (no load error) | | |
| Output signal in event of wire breakage | | | | |
| Voltage output: | | ca. 13 V | | |
| Current output: | | ca. 26 mA | | |
| **Measuring accuracy** | | | | |
| Transmission error | | ≤ 1 % of final value (at 20 °C ambient temperature) | | |
| Transmission error for measuring range span ≤ 200K | | ≤ 2 % of final value (at 20 °C ambient temperature) | | |
| Max. temperature co-efficient | | 200 ppm/K (ref. final value) | | |
| Load error (deviation at 100 Ω load) | | < 0,02 %/100 Ω | | |
| CJC compensation | | directly at the TC terminal | | |
| Zero/span adjustment range | | approx. 5 % Approx. of scope of measuring range | | |
| **General data** | | | | |
| Supply data | | 24 V DC +25 % / –20 %, polarised | | |
| Power consumption | | ca. 25 mA + output current | | |
| Ambient temperature range | | 0...60 °C (100 % capacity utilisation of device, series connected) | | |
| Norms, specifications | | DIN EN 50178, EMC guideline 89/336/EWG | | |
| **EMV** | | | | |
| Emitted interference | | EN 60715/Kl. B, EN 61000-6-1, CISPR 222/Kl. B | | |
| Interference immunity | | EN 61000–4–2/3/4/5/6 | | |
| **Accessories** | | | | |
| Module board, overall width of 12.5mm, 4 connections per side | | | | |
| Screw terminal | | | 80.060.0030.1 | 1 |
| Spring clamp terminal | | | 80.060.0031.1 | 1 |
| Coding branch | | | Z5.563.0453.0 | 25 |
| Plug-in jumper | | | Z8.000.0229.5 | 50 |
| Large marker tag, white, blank | | | 04.249.4053.0 | 500 |
| Small marker tag | | | | |
| red, blank | | | 04.249.1053.0 | 500 |
| blue, blank | | | 04.249.1553.0 | 500 |
| white, blank | | | 04.249.2053.0 | 500 |

| Part no. key for input temperature range | | |
|---|---|---|
| XX = | 03 | 0...300 °C |
| | 06 | 0...600 °C |
| | 12 | 0...1200 °C |
| | 31 | 0...150 °C |

**Ordering example:**
TC Type K, Input 0...100 °C
Part no. 82.021.1812.0



Subject to change without further notice

# dipos

## RTD/Pt100

### Block diagram

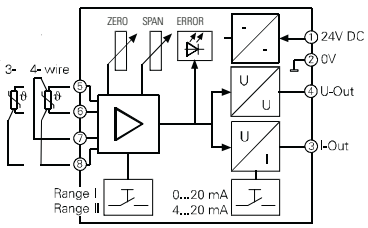


### Dimension drawing

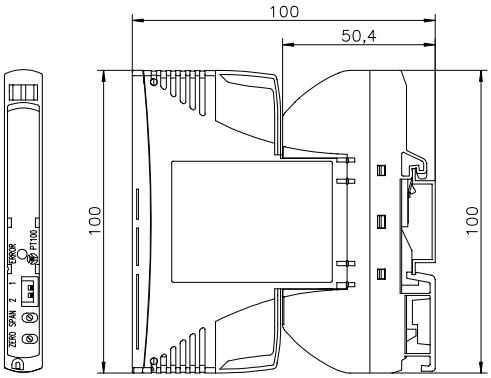


## TC

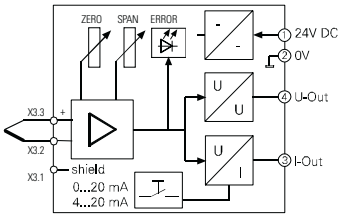


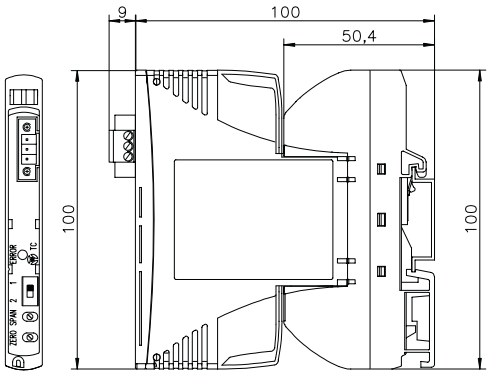


electronics

# Analog measurement technology

## RTD Signal Conditioner for Pt100

cores

Dimensions (mm) W x H x D
19 x 75 x 110.8

***cores* Pt100**

Approvals: UL, CSA

***cores* Pt100 with alarm output**

Approvals: UL, CSA

| **Description** | Type | Part no. | Std. pack | Type | Part no. | Std. pack |
|---|---|---|---|---|---|---|
| RTD Signal Conditioner for Pt100 | See reference key for ***cores*** Pt100 | | 1 | See reference key for ***cores*** Pt100 | | |
| | | | | | | |
| | | | | | | |
| | | | | | | |
| | | | | | | |
| | | | | | | |
| **Dimensions** | **See page 510** | | | **See page 510** | | |
| **General data** | | | | | | |
| Operating voltage | 24 V DC ±20%, polarised | | | 24 V DC ±20%, polarised | | |
| Typical power consumption | 20 mA at 24 V and output current | | | 20 mA at 24 V and output current | | |
| **Measured input** | | | | | | |
| Sensor | Pt100 DIN IEC 751 | | | Pt100 DIN IEC 751 | | |
| Measured current | ca. 1 mA | | | ca. 1 mA | | |
| Sensor connection technology (adjustable with DIP switch) | 2, 3, 4 wire connection | | | 2, 3, 4 wire connection | | |
| Temperature measuring range (adjustable with DIP switch) | See reference key | | | See reference key | | |
| Input protection | Protective diodes, RC filter | | | Protective diodes, RC filter | | |
| **Measured output** | | | | | | |
| Voltage signal | See reference key | | | See reference key | | |
| Current signal | 0...20 mA, 4...20 mA | | | 0...20 mA, 4...20 mA | | |
| Internal resistance (for voltage signal) | 100 Ω | | | 100 Ω | | |
| Maximum permitted output load, load | 0...500 Ω | | | 0...500 Ω | | |
| Output protection | Suppressor diode | | | Suppressor diode | | |
| **Switch output, short circuit proof** | | | | | | |
| Transistor switch output, positive switching | | | | 24 V DC, maximum 50 mA | | |
| Peak short circuit current: typical | – | | | 0.5 A | | |
| maximum | – | | – | 1.2 A | | |
| Setting range for switching threshold | | | | | | |
| at output signal 0...20 mA | – | | – | –2...+12 V | | |
| at output signal 4...20 mA | – | | – | 0...+12 V | | |
| Setting accuracy | – | | | ±1% v. E. | | |
| Setpoint with external voltmeter | – | | | Measuring pins behind front flap | | |
| **Measuring accuracy** | | | | | | |
| Intrinsic error at 20 °C ambient temperature | ±0.4% v. E. | | | ±0.4% v. E. | | |
| Temperature coefficient | ≤ 0,02 %/K | | | ≤ 0.02 %/K | | |
| Nominal load for current output | 100 Ω | | | 100 Ω | | |
| Additional load error for current output | ±0,02%/100 Ω load | | | ±0.02 %/100 Ω load | | |
| Typical zero/span adjustment range | ±3% of scope of measuring range | | | ±3% of scope of measuring range | | |
| | | | | | | |
| Operating ambient temperature at 24V | 0 ...50 °C | | | 0 ...50 °C | | |
| Storage temperature | –25...+55 °C | | | –25...+55 °C | | |
| Wire range: | | | | | | |
| finely stranded | 0.5 – 2.5 $mm^2$ | | | 0.5 – 2,5 $mm^2$ | | |
| single core | 0.5 – 4 $mm^2$ | | | 0.5 – 4 $mm^2$ | | |
| Location of mounting rail TS35 | horizontal | | | horizontal | | |
| | | | | | | |
| Emitted interference | 61000-6-3 | | | 61000-6-3 | | |
| Interference immunity | 61000-6-2 | | | 61000-6-2 | | |
| **Accessories** | | | | | | |
| Marking tag for housing | | 04.244.1853.0 | 100 | | 04.244.1853.0 | 100 |
| | | | | | | |



Subject to change without further notice

# cores

| Temperature measuring range | S1 | S2 | S8 |
|---|---|---|---|
| –50...+50 °C | off | off | on |
| 0...100 °C | off | off | off |
| 0...150 °C | on | off | off |
| 0...200 °C | on | on | off |

| Current output | S3 | S4 |
|---|---|---|
| 0...20 mA | on | off |
| 4...20 mA | off | on |

| Input | S5 | S6 | S7 |
|---|---|---|---|
| 2 wire | off | on | on |
| 3 wire | on | on | off |
| 4 wire | off | off | off |

Reference key for ***cores*** Pt100

**82.010.XXXX.0**

Temperature measuring rang
0 = ±50 °C
1 = 0–100 °C
2 = 0–150 °C
3 = 0–200 °C
4 = 0–300 °C
5 = 0–400 °C
6 = 0–500 °C

Output signal
00 = 0–10 V
04 = 0–20 mA
08 = 4–20 mA
02 = 0–10 V with switching output (Alarm)
06 = 0–20 mA with switching output (Alarm)
10 = 4–20 mA with switching output (Alarm)

Connectors for sensors
0 = 2-wire
1 = 3-wire
2 = 4-wire

**Example of how to order:**
Connector: 3 wire
Output: 0 – 10 V
Temperature measuring range:
0–100 °C
**» » Part no.: 82.010.1001.0 « «**

**Caution:** The part number determines the setting of the DIP switches within a variant.

They can be subsequently altered. But, care should be taken to ensure that the adjustment is within the parameters of the particular variant.

Functional overview

| | Variant 1 | Variant 2 | Variant 3 | Variant 4 | Variant 5 | Variant 6 | Variant 7 | Variant 8 |
|---|---|---|---|---|---|---|---|---|
| Temperature ranges | ± 50 °C<br>0–100 °C<br>0–150 °C<br>0–200 °C | ± 50 °C<br>0–100 °C<br>0–150 °C<br>0–200 °C | 0–300 °C<br>0–400 °C<br>0–500 °C | 0–300 °C<br>0–400 °C<br>0–500 °C | ± 50 °C<br>0–100 °C<br>0–150 °C<br>0–200 °C | ± 50 °C<br>0–100 °C<br>0–150 °C<br>0–200 °C | 0–300 °C<br>0–400 °C<br>0–500 °C | 0–300 °C<br>0–400 °C<br>0–500 °C |
| Analog signal | 0–10 V | 0–20 mA<br>4–20 mA | 0–10 V | 0–20 mA<br>4–20 mA | 0–10 V | 0–20 mA<br>4–20 mA | 0–10 V | 0–20 mA<br>4–20 mA |
| Alarm output | | | | | yes | yes | yes | yes |

**Caution: Adjustment of the zero and span is required after every change of the DIP switches!**

electronics

# Analog measurement technology
# Analog interface module

## AKB

### without electrical isolation

**Application:**
The Wieland interface modules AKB and AKT are used to transfer an analog measured value from one signal format to another.

Dimensions (mm) W x H x D
16.5 x 60.5 x 90.5

**Analog interface module without electrical isolation**
Approvals: UL, CSA

| Std. pack | | Part no. | Part no. | Part no. | Part no. |
|---|---|---|---|---|---|
| 1 | –10...+10 V | – | – | – | – |
| 1 | 0...10 V | – | – | 57.806.0053.0 | 57.806.1553.0 |
| 1 | 0...20 mA | – | 57.806.0253.0 | – | – |
| 1 | 4...20 mA | – | 57.806.0353.0 | – | – |
| | **Output** | **–10...10 V** | **0...10 V** | **0...20 mA** | **4...20 mA** |
| | | | | | |
| **Other signals on request** | | **Ordering example:** | *AKB* 20 mA / 10 V | | |
| | | | 57.806.0253.0 | | |
| | | | | | |
| **Wiring diagram, sample application** | | **See page 510** | | | |
| **Technical data** | | | | | |
| Operating voltage | | 24 V DC ± 20%, polarised | | | |
| Typical power consumption (Output signal 20 mA) | | | | | |
| at 19 V DC | | | | | |
| at 24 V DC | | ca. 12 mA + output current | | | |
| at 29 V DC | | | | | |
| **Input** | | | | | |
| Input resistance: | | | | | |
| for standard voltage | | > 1 MΩ | | | |
| for standard current | | 49.9 Ω | | | |
| Maximum permitted input signal | | | | | |
| for standard voltage | | 60 V | | | |
| for standard current | | 70 mA (3,5 V) | | | |
| Voltage drop at 20 mA | | 1 V | | | |
| Input protection against voltage peaks | | LC-Filter | | | |
| **Output** | | | | | |
| Output load: | | | | | |
| for maximum standard voltage | | 5 mA (RL ≥ 100 kΩ, see $R_i$) | | | |
| for standard current | | 0...500 Ω (load) | | | |
| Maximum load error (adjustment at 100 Ω) | | 0.02 % / 100 Ω | | | |
| | | | | | |
| Output protection against external voltage | | Z-Diode | | | |
| **Transfer procedure** | | | | | |
| Static transmission error at 20 °C | | < 0.2 % v. E. | | | |
| Temperature coefficient | | < 0.015 %/K | | | |
| Effect of load impedance at current output | | 0.02 % / 100 Ω | | | |
| Limit frequency: (sinus 100%) | | | | | |
| at sinus 100% | | 20 kHz | | | |
| at ± 10 V | | 10 kHz | | | |
| Typical effect of frequency on transfer | | 1 % / kHz; 2°el / kHz | | | |
| **Isolation** | | | | | |
| All terminals to earth | | 2 $kV_{eff.}$ | | | |
| | | | | | |
| **Temperature range** | | | | | |
| Operating temperature range for 24 V | | | | | |
| vertical installation without space | | 0 ...50 °C | | | |
| vertical installation with spacing of 20 mm | | 0 ...60 °C | | | |
| Storage temperature | | –40...+85 °C | | | |
| Wire range | | 20 – 10 AWG | | | |



Subject to change without further notice

# AKT

**with signal and supply isolation**

## Analog interface module with electrical isolation

Approvals: UL, CSA

Dimensions (mm) W x H x D
22.5 x 60.5 x 90.5

| Std. pack | | Part no. | Part no. | Part no. | Part no. |
|---|---|---|---|---|---|
| 1 | –10...+10 V | 57.806.1053.0* | 57.806.2253.0 | 57.806.5653.0 | 57.806.2153.0 |
| 1 | 0...10 V | 57.806.2653.0 | 57.806.1053.0 | 57.806.0653.0 | 57.806.0953.0 |
| 1 | 0...20 mA | 57.806.2753.0 | 57.806.0753.0*** | 57.806.1153.0** | 57.806.1253.0 |
| 1 | 4...20 mA | 57.806.5553.0 | 57.806.0853.0 | 57.806.1353.0 | 57.806.1153.0´ |
| | **Output** | **–10...10 V** | **0...10 V** | **0...20 mA** | **4...20 mA** |

| | | | |
|---|---|---|---|
| **Other signals on request** | **Ordering example:** | *AKT* ±10 V / ±10 V | * contains transfer 0...10 V / 0...10 V |
| | | 57.806.1053.0 | ** contains transfer 4...20 mA / 4...20 mA |
| **Wiring diagram, sample application** | | | *** can also be used for –20...+20 mA / –10 V...+10 V |

| | |
|---|---|
| **Technical data** | **See page 510** |
| Operating voltage | 24 V DC ± 20%, polarised |
| Typical power consumption (Output signal 20 mA) | |
| at 19 V DC | 117 mA |
| at 24 V DC | 88 mA |
| at 29 V DC | 72 mA |
| **Input** | |
| Input resistance: | |
| for standard voltage | 1 MΩ |
| for standard current | 49.9 Ω |
| Maximum permitted input signal | |
| for standard voltage | 60 V |
| for standard current | 70 mA (3.5 V) |
| Voltage drop at 20 mA | 1 V |
| Input protection against voltage peaks | LC-Filter |
| **Output** | |
| Output load: | |
| for standard voltage maximum | 5 mA (RL ≥ 100 kΩ, see $R_i$) |
| for standard current | 0...500 Ω (load) |
| Maximum load error (adjustment at 100 Ω) | 0.02 % / 100 Ω |
| Maximum output ripple (2 output filters) | 30 $mV_S$ (40 kHz) |
| Output protection against external voltage | Z-Diode(n) |
| **Transfer procedure** | |
| Static transmission error at 20 °C | < 0.1 % v. E. |
| Temperature coefficient | < 0.02 % / K |
| Effect of load impedance at current output | 0.02 % / 100 Ω |
| Limit frequency: (Sinus 100%) | 20 kHz |
| at ± 10 V | 10 kHz |
| Typical effect of frequency on transfer | 1% / kHz; –2°el / kHz |
| **Isolation** | |
| Input / Output / Supply | 3 x 1,5 $kV_{eff.}$ 1 min. |
| Input / Output / Supply | 3 x 2,5 $kV_{eff.}$ 10 sec. |
| Input / Output / Supply | 3 x 4 $kV_{eff.}$ 1,2/50 µs |
| All terminals to earth | 2 $kV_{eff.}$ |
| **Temperature range** | |
| Operating temperature range for 24 V | |
| vertical installation without space | 0...50 °C |
| vertical installation with spacing of 20 mm | 0...60 °C |
| Storage temperature | 40...+85 °C |
| Wire range | 20 – 10 AWG |

electronics

# Analog measurement technology
# Isolating set point amplifier

UET

## with 2 contact outputs

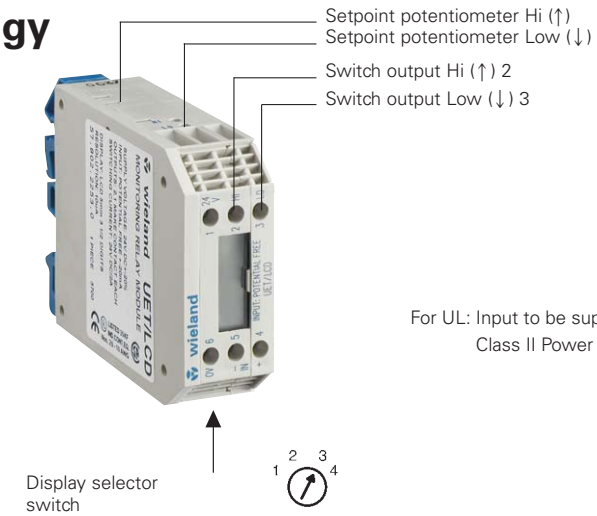


For UL: Input to be supplied from Listed Class II Power Supply

**Important note for user:**
The relay outputs must be supplied from the same phase (e.g. L1).

**Caution:**
**Can only be mounted vertically due to the internal relays**

Dimensions (mm) W x H x D
22,5 x 60,6 x 90,5

## Isolating set point amplifier with LCD display or measuring points

Approvals: Ⓤ, CSA

| Description | Type | Part no. | Std. pack | Type | Part no. | Std. pack |
|---|---|---|---|---|---|---|
| **with measuring points** | UET ±10 V* | 57.802.1053.0 | 1 | | | |
| | | | | UET 20 mA** | 57.806.1253.0 | 1 |
| | | | | | | |
| **with LCD display** | UET/LCD ±10 V* | 57.802.2053.0 | 1 | | | |
| | | | | UET/LCD 20 mA** | 57.802.2253.0 | 1 |
| | | | | | | |
| **Versions with other input data available on request** | *** contains standard signal 0...10 V** | | | **** contains standard signal 4...20 mA** | | |
| | | | | | | |
| **Wiring diagram** | **See page 513** | | | **See page 513** | | |
| **Technical data** | **UET ±10 V** | | | **UET 20 mA** | | |
| Operating voltage | 24 V DC ±20%,polarised | | | 24 V DC ±20%, polarised | | |
| Power consumption at 24 V, 2 active relays | ca. 40 mA + output currents | | | ca. 40 mA +output currents | | |
| | | | | | | |
| **Potential free input** | | | | | | |
| Measured input | ±19.99 V | | | ±19.99 mA | | |
| Input resistance | 1 MΩ | | | 100 Ω | | |
| Maximum permitted input signal | ±50 V | | | ±50 mA (±5 V) | | |
| Input protection (interference suppression) | LC-filter | | | LC-filter | | |
| Measuring points for external multimeter | | | | | | |
| on measured input potential (for UET) | ±1.99 V (acc. ±19,9 ±1.99measured signal) | | | ±1.99 V (acc. ±19.9 V Measured signal) | | |
| Digital display, LCD 3½ digit | with sign and dimension | | | with sign and dimension | | |
| Character height | 5 mm | | | 5 mm | | |
| Accuracy of display | | | | | | |
| at 20 °C | ±2 digit | | | ±2 digit | | |
| at 0...60 °C | ±5 digit | | | ±5 digit | | |
| Display of range | ±19.99 V | | | ±19.99 mA | | |
| Resolution | 10 mV | | | 10 µA | | |
| Setpoint adjustment range | ±19.99 V | | | ±19.99 mA | | |
| | | | | | | |
| **Switch outputs** | | | | | | |
| Switching voltage | 24 V DC | | | 24 V DC | | |
| Maximum switching current | 2 A | | | 2 A | | |
| Switching hysteresis | ca. ±20 mV | | | ca. ±20 µA | | |
| Reproducibility of switching points | ca. ±10 mV | | | ca. ±10 µA | | |
| Reaction time | | | | | | |
| Pickup delay | 7 ms | | | 7 ms | | |
| Dropout delay | 5 ms | | | 5 ms | | |
| Contact | 2 x 1 make contact (SPST, N. O.) | | | 2 x 1 make contact (SPST, N. O.) | | |
| Contact material | AgCdO + 1 µ Au | | | AgCdO + 1 µ Au | | |
| | | | | | | |
| **Isolation** | | | | | | |
| input and supply | 500 V DC | | | 500 V DC | | |
| contact and input | 500 V DC | | | 500 V DC | | |
| contact and supply | – | | | – | | |
| open contact | 750 $V_{eff.}$ | | | 750 $V_{eff.}$ | | |
| Isolation against mounting rail | 2 $kV_{eff.}$ | | | 2 $kV_{eff.}$ | | |
| | | | | | | |
| **Temperature range** | | | | | | |
| Operating temperature range, series connected at | | | | | | |
| Vertical installation without spacing | 0 ...50 °C | | | 0 ...50 °C | | |
| Vertical installation with spacing of 20 mm | 0...60 °C | | | 0...60 °C | | |
| Storage temperature | –40...+85 °C | | | –40...+85 °C | | |



Subject to change without further notice

# UET-P

## with 2 potential free contact outputs

View from underneath

Position 1+4: Measured value/ actual value
Position 2: Setpoint "LO" (↓)
Position 3: Setpoint "HI" (↑)

**Caution:**
**It is permitted to install the device vertically due to the relays**

Dimensions (mm) W x H x D
29 x 60,6 x 90,5

For UL: Input to be supplied from Listed Class II Power Supply

## Isolating set point amplifier, potential free with LCD display or measuring points

Approvals (UL), CSA

| Description | | Part no. | Std. pack | Part no. | Std. pack | Part no. | Std. pack |
|---|---|---|---|---|---|---|---|
| with measuring points | UET-P ±199 mV | 57.802.1453.0 | 1 | | | | |
| | UET-P ±10 V* | | | 57.802.1153.0 | 1 | | |
| | UET-P 20 mA** | | | | | 57.802.1353.0 | 1 |
| with LCD display | UET-P/LCD ±10 V* | | | 57.802.2153.0 | 1 | | |
| | UET-P/LCD 20 mA** | | | | | 57.802.2353.0 | 1 |
| | | | | | | | |
| **Versions with other input data available on request** | | | | *** contains standard signal 0...10 V** | | **** contains standard signal 4...20 mA** | |
| | | | | | | | |
| **Wiring diagram** | | **See page 513** | | **See page 513** | | **See page 5/111** | |
| **Technical data** | | **UET-P ±199 mV** | | **UET-P ±10 V** | | **UET-P 20 mA** | |
| Operating voltage | | 24 V DC ±20%, polarised | | 24 V DC ±20%, polarised | | 24 V DC ±20%, polarised | |
| Power consumption at 24 V, 2 active relays | | ca. 40 mA + output currents | | ca. 40 mA + output currents | | ca. 40 mA + output currents | |
| | | | | | | | |
| **Potential free input** | | | | | | | |
| Measured input | | ±19.99 mA | | ±19.99 mA | | ±19,99 mA | |
| Input resistance: | | 1 MΩ | | 1 MΩ | | 100 Ω | |
| Maximum permitted input signal | | ±50 V | | ±50 V | | ±50 mA (±5 V) | |
| Input protection (interference suppression) | | LC-Filter | | LC-Filter | | LC-Filter | |
| Measuring points for external multimeter | | | | | | | |
| on measured input potential (for UET) | | ±1.99 V (acc. ±19,9 V measured signal) | | ±1.99 V (acc. ±19.9 V measured signal) | | ±1.99 V (acc. ±19.9 V measured signal) | |
| Digital display, LCD 3½ digit | | | | with sign and dimension | | with sign and dimension | |
| Character height | | | | 5 mm | | 5 mm | |
| Accuracy of display | | | | | | | |
| at 20 °C | | | | ±2 digit | | ±2 digit | |
| at 0...60 °C | | | | ±5 digit | | ±5 digit | |
| Display of range | | ±199,9 mV | | ±19.99 V | | ±19.99 mA | |
| Resolution | | 100 µV | | 10 mV | | 10 µA | |
| Setpoint adjustment range | | ±199,9 mV | | ±19.99 V | | ±19.99 mA | |
| | | | | | | | |
| **Switch outputs** | | | | | | | |
| Switching voltage | | 24 V DC / 230 V AC | | 24 V DC / 230 V AC | | 24 V DC / 230 V AC | |
| Maximum switching current | | 2 A DC / 1 A AC | | 2A DC / 1 A AC | | 2A DC / 1 A AC | |
| Switching hysteresis | | ca. 200 µV | | ca. 20 mV | | ca. ±20 µA | |
| Reproducibility of switching points | | ±100 µV | | ±10 mV | | ca.±10 µA | |
| Reaction time | | | | | | | |
| Pickup delay | | 7 ms | | 7 ms | | 7 ms | |
| Dropout delay | | 5 ms | | 5 ms | | 5 ms | |
| Contact | | 2 x 1 make contact (SPST, N. O.) | | 2 x 1 make contact (SPST, N. O.) | | 2 x 1 make contact (SPST, N. O.) | |
| Contact material | | AgCdO + 1 µ Au | | AgCdO + 1 µ Au | | AgCdO + 1µ Au | |
| | | | | | | | |
| **Isolation** | | | | | | | |
| Input and supply | | 500 V DC | | 500 V DC | | 500 V DC | |
| Contact and input | | 1.5 $kV_{eff.}$ | | 1.5 $kV_{eff.}$ | | 1.5 $kV_{eff.}$ | |
| Contact and supply | | 1.5 $kV_{eff.}$ | | 1.5 $kV_{eff.}$ | | 1.5 $kV_{eff.}$ | |
| open contacts | | 750 $V_{eff.}$ | | 750 $V_{eff.}$ | | 750 $V_{eff.}$ | |
| Isolation against mounting rail | | 2 $kV_{eff.}$ | | 2 $kV_{eff.}$ | | 2 $kV_{eff.}$ | |
| | | | | | | | |
| **Temperature range** | | | | | | | |
| Operating temperature range, series connected at | | | | | | | |
| Vertical installation without spacing | | 0 ...50 °C | | 0 ...50 °C | | 0 ...50 °C | |
| Vertical installation with spacing of | | 0...60 °C | | 0...60 °C | | 0...60 °C | |
| Storage temperature | | –40...+85 °C | | –40...+85 °C | | –40...+85 °C | |

# Analog measurement technology
# Constant voltage source 10 V

**dipos** KSQ

- Overall width 12.5 mm
- Output voltage can be set between 9.5 V and 10.5 V
- Detection of wire breakage
  Overload signal at the output, red LED

Dimensions (mm) W x H x D
12.5 x 100 x 100

**Constant voltage source**
**dipos$_{KSQ}$ 10 V**
Approvals: UL, CSA in preparation

| Description | Output signal | Type | Part no. | Std. pack |
|---|---|---|---|---|
| ***dipos*** KSQ **10 V Constant voltage source** | | ***dipos*** KSQ 10 V | 82.081.0000.0 | 1 |
| | | | | |
| | | | | |
| | | | | |
| **Wiring diagram, dimensions siehe Seite 513** | | **see page 513** | | |
| | | | | |
| **Technical data** | | | | |
| **Measured input** | | | | |
| Operating voltage $U_V$ | | 24 V DC (16...30 V DC), polarised | | |
| Power consumption at $U_V$ = 24 V | | approx. 10 mA + output current | | |
| | | | | |
| **Measured output** | | | | |
| Output voltage | | 10 V DC constant, short circuit proof | | |
| Setting range | | 9.5 V...10.5 V DC | | |
| Permitted output load | | 0...30 mA | | |
| Short-circuit current | | approx. 50 mA | | |
| Maximum residual ripple | | 10 $mV_{SS}$ | | |
| Output protection | | Protective diodes | | |
| | | | | |
| **Measuring accuracy** | | | | |
| Intrinsic error | | ± 0.1 % of final value (at UV = 24 V, | | |
| | | and 20 °C ambient temperature) | | |
| | | | | |
| Maximum temperature coefficient | | 150 ppm/K of final value | | |
| | | | | |
| **General data** | | | | |
| **Isolation** | | 2 $kV_{eff.}$ (terminals to mounting rail) | | |
| Ambient temperature range | | 0 °C...+60 °C (at $U_V$ = 24 V) | | |
| Storage temperature | | –25 °C...+60 °C | | |
| Transport temperature | | –25 °C...+70 °C | | |
| | | | | |
| **EMC** | | | | |
| Emitted interference | | EN 55022/Kl. B, EN 61000-6-1, CISPR 222/Kl. B | | |
| Interference immunity | | EN 61000–4–2/3/4/5/6 | | |
| | | | | |
| **Accessories** | | | | |
| Module board, overall width of 12.5mm, 4 connections per side | | | | |
| Screw terminal | | | 80.060.0020.1 | 1 |
| Spring clamp terminal | | | 80.060.0021.1 | 1 |
| Coding branch | | | Z5.563.0453.0 | 25 |
| Plug-in jumper | | | Z8.000.0229.5 | 50 |
| Large marker tag, white, blank | | | 04.249.4053.0 | 500 |
| Small marker tag | | | 04.249.1053.0 | 500 |
| red, blank | | | 04.249.1553.0 | 500 |
| blue, blank | | | 04.249.2053.0 | 500 |
| white, blank | | | 04.249.2053.0 | 500 |



Subject to change without further notice

dipos

Dimensions (mm) W x H x D
16.5 x 60.5 x 91

## Constant voltage source 10 V

Approvals: UL, ⊡, CSA

| Description | Type | Part no. | Std. pack | |
|---|---|---|---|---|
| | KSQ – 10 V | 57.803.8053.0 | 1 | |
| | | | | |
| | | | | |
| | | | | |
| | | | | |
| **Wiring diagram, dimensions** | **See page 513** | | | |
| | | | | |
| **Technical data** | | | | |
| **Power supply** | | | | |
| Supply voltage | 15...30 V DC, polarised | | | |
| Power consumption | approx. 10 mA + output current | | | |
| | | | | |
| **Constant voltage output** | | | | |
| Output voltage | 10 V DC | | | **Note for application:** |
| Setting range of output voltage | ±0,5 V | | | The module has an adjustment range of + - 0.5 V to |
| Maximum output current | 30 mA | | | compensate for any inaccuracies within the |
| | | | | potentiometer. |
| Influence of load variation output voltage | ≤ 1 % | | | |
| Error on modification of load | ≤ 1 % (at 0 ...500 Ω) | | | |
| influence of ambient temperature | 30 ppm/K | | | |
| Ambient operating temperature | See derating curve | | | |
| | | | | |
| Isolation to mounting rail | 2 $kV_{eff.}$ | | | |
| Mounting rail | TS 35 | | | |

electronics

# cores, AKT+AKB

## *cores* dimensions

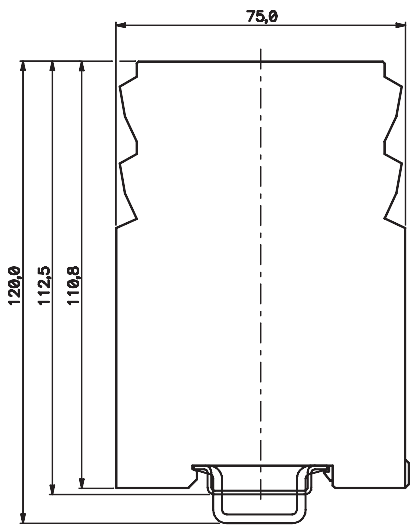


## *AKB*
**Analog interface module**

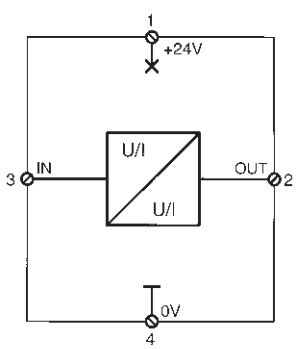


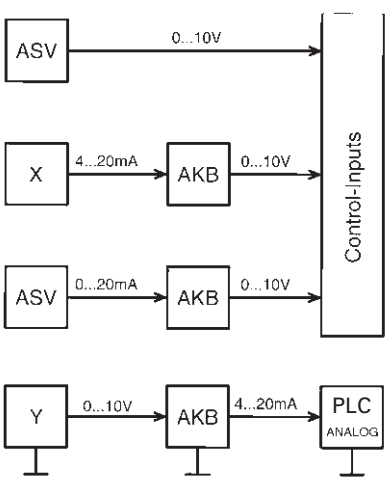


## *AKT*
**Analog isolating module**

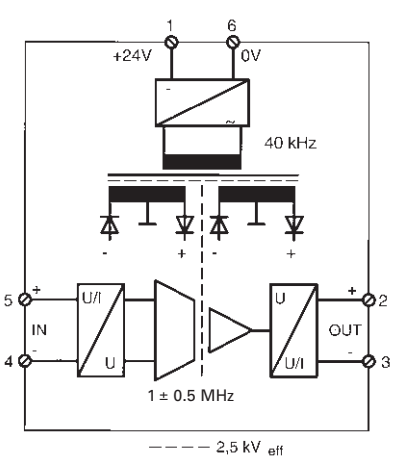


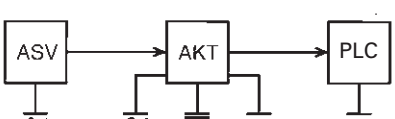




Subject to change without further notice

# UET, UET-P, dipos KSQ, KSQ

## UET/UET-P
## Isolating set point amplifiers

### UET

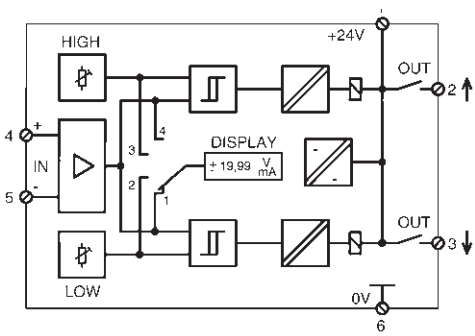


### UET-P

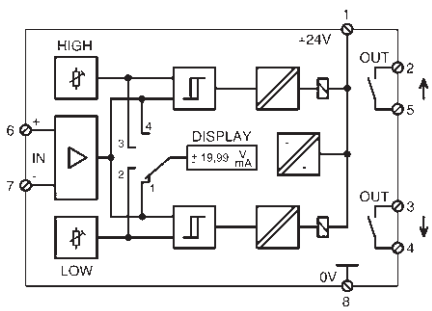


### KSQ
**Constant voltage source**

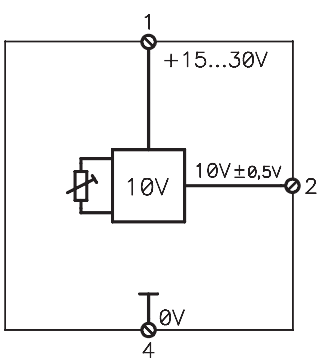


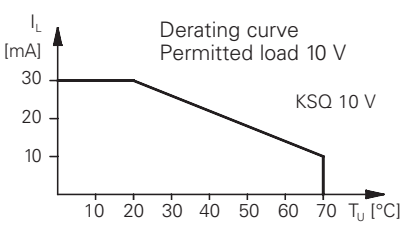


### dipos
**Constant voltage source**

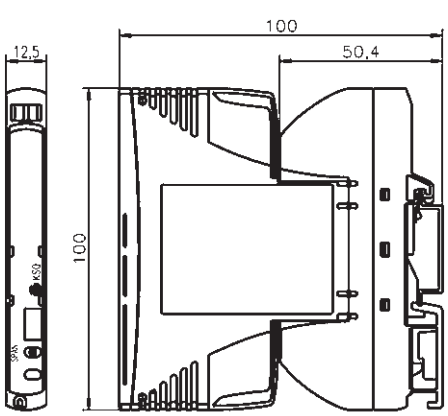


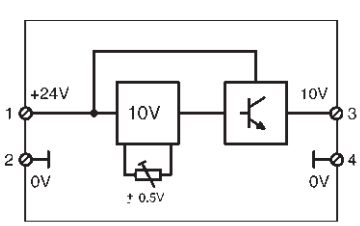


electronics

# Power-Supply

# power

**Single phase/three phase switched mode power supply units**
**Power supply units 24 V/0.3 – 40 A**
**Universal power transformer**
**Rectifier module**
**Fixed voltage regulator**

***power*** offers

- Temperature controlled power limit
- Efficiency < 90 %
- Modules with current limiter
- Overload indication
- Compact designs
- Short circuit protection
- Broad band output

All Wieland Components which require CE general certification are CE certified, and identified with the CE logo.

electronics

# Electronic Components

## Power-Supply

# Explanation of important technical terms

wipos

### Output characteristic

Response characteristic of the power supply when exceeding the specified output values.

The output characteristics are:

- ❒ **Constant current mode**
  When exceeding the nominal current, the device supplies a constant current independent of the voltage.
- ❒ **Fold-back mode**
  When exceeding the nominal current, the output voltage decreases to zero while the current subsides.
- ❒ **Hiccup mode**
  The device switches off when the nominal current is exceeded, but switches on again periodically and checks whether the overload is still applied. When the overload has diminished, the device switches on automatically.
- ❒ **Over-current switch-off mode**
  When exceeding the nominal current, the device switches off and must be manually switched on again after the overload is removed.

### Response time

The period of time required after a defined load change until the output voltage is again within the tolerance range.

### Operating temperature

The temperature range that an operating device must not exceed.

### Drift

Output voltage changing over time or the temperature.

### DC/DC transducer

Device that converts a given direct voltage into a different direct voltage by means of a switching regulator.

### Inrush current

The peak current caused during switch-on of a power supply by the charging current of the filter capacitors. It is limited by the input impedance but can also be limited further by special components.

### Radio interference, electromagnetic interference

Unwanted high-frequency disturbance variables caused by switching processes within the power supply. We distinguish between conducted and radiated radio interference. Conducted interferences are reduced to permitted values by means of filters, while radiated interferences can be kept within the permitted limits by means of optimized PCB creation and screening.

### Insulation voltage

Insulation voltage is the maximum voltage that can be applied between two isolated circuits.

### Cooling

Heat transfer from components that are producing power loss. We distinguish between thermal radiation, convection (natural and forced convection with fan), and thermal conduction to an external heat exchanger.

### Short-circuit protected

Protection of the power supply against overload and short circuit.

See the output characteristic for various options.

### Storage temperature

The temperature range at which a device can be stored (not operated) without being damaged.

### Load regulation

Change of output voltage at a defined load change.

### Power reduction, derating

Reduction of output power required under certain circumstances such as when exceeding a defined temperature.

### Power factor

Ratio between real power and apparent power. In a switch-mode power supply, the power factor normally becomes smaller than 1 due to a non-sinusoidal current input.

### Hold-up time

The period of time in which the output voltage is still controlled after the mains voltage has dropped completely.

### Line regulation

Change of output voltage at a defined mains voltage change while all the other parameters (load) are kept constant.

### Nominal output voltage

Output voltage specified for the device. The voltage can be increased or decreased within specified limits below and above the nominal value.

### Temperature coefficient

Output voltage change depending on the temperature.

### Ambient temperature

Temperature of the steady air around the device. It is normally measured within a radius of approx. 10 mm around the operating device.

### Overshoot

Increase of the output voltage exceeding the specific value due to a rapid load change.

### Overcurrent limitation

Protective mechanism against overload of the power supply due to excessive output current. Also see short-circuit current.

### Efficiency

Relation between output power and input power, normally indicated at full load and nominal input voltage. Efficiency is one of the most important features when evaluating a power supply.

The difference between input power and output power is converted into heat. Any increase in efficiency therefore results in the heat load on the components being reduced and the service life of the device being increased. Even small improvements in efficiency will result in drastic changes in the service life.

# wipos

**_wipos_ switch-mode power supplies – Power competence for any control cabinet**

Power supplies are the heart of any control cabinet. They safeguard the life of any connected electrical and electronic component. In addition to providing a reliable supply to units under different load cases, the devices themselves must also be safe for the user.

**Narrow, but powerful**

Knowing that rail space is a key concern for our customers, we designed our new ***wipos*** power supplies with a very narrow footprint, enabling optimal space utilization in the control cabinet. Our single-phase, rail-mountable devices range from 50 to 480 W and require only 45 mm to 86 mm of rail space.

**Your life is important to us**

The vertical ***wipos*** device series, provides a hinged cover for the primary-side connection points. It safely covers all connection points with hazardous contact voltage. Wire entries are clearly marked for safe and easy installation.

**Overload problems – non-existent for *wipos***

***wipos*** incorporates a temperature-controlled power limitation function as protection against overload caused by excessive ambient temperatures or unfavorable installation conditions. The output voltage is reduced causing the output power to decrease before the semi-conductors can reach an impermissibly high temperature.

**Parallel operation – whatever you want**

For special balancing of the output current during parallel operation of several ***wipos*** devices, the output can be changed. It is set by default in a way that the output voltage is as constant as possible, independent of the load.

The control precision is ± 1% of the nominal current. For parallel operation, the output is changed in a way that an approximately uniform load distribution is achieved even when considering manufacturing tolerances and slightly different output voltages. The overall residual ripple is very low at < 50 mV.

Further features of the ***wipos*** switch mode power supply series:

- ❒ Power factor correction (PFC, vertical versions) according to EN 61000-3-2
- ❒ Temperature-prompted power limitation
- ❒ Efficiency up to 90%
- ❒ Extended output voltage range of 23 V – 30 V
- ❒ Output characteristic selectable for output current balancing during parallel operation
- ❒ Change of current limitation via internal potentiometer
- ❒ Reduced ripple on the output (< 50 m V)
- ❒ Reduced ramp-up time < 1 s
- ❒ Protection against battery discharge in OFF state during parallel loading operation
- ❒ Red LED to signal overloads
- ❒ Convenient DIN rail mounting, even for 40 A, 3-phase devices
- ❒ Hiccup Mode
- ❒ Optional features; remote ON/OFF, overload signal, power failure signal, and output characteristic switchover
- ❒ UL-pending, CSA approvals
- ❒ Standards VDE 0805, EN 60950, IEC 950, UL 1950, safety extra-low voltage (SELV) EN 60950, EN 55011, EN 61000-6-1/-2, EN 55022 class B

***Custom devices and solutions also available.***

# Single-phase switch-mode power supplies vertical design

wipos

Dimensions (mm): W x H x D

| | **24 V / 2 A**<br>**Primary switch-mode regulator**<br>CE; Approvals: UL, CSA and pending<br>45 x 72 x 105 | | **24 V / 5 A**<br>**Primary switch-mode regulator**<br>CE; Approvals: cULus, and CSA pending<br>70 x 138 x 139 | |
|---|---|---|---|---|
| **Description** | Type | Part no. | Type | Part no. |
| 48 W | power supply, 24 V / 2 A | 81.000.6010.0 | | |
| 120 W | | | power supply, 24 V / 5 A | 81.000.6030.0 |
| 240 W | | | | |
| 480 W | | | | |
| | | | | |
| **Output power, current limitation characteristic** | **see graphs on page 530** | | **see graphs on page 530** | |
| | | | | |
| **Input** | | | | |
| Nominal input voltage | 110–230 $V_{AC}$, 47–63 Hz (universal input) | | 115/230 $V_{AC}$, 47–63 Hz (selectable input) | |
| Input voltage range | 94–265 $V_{AC}$ | | 93–132 $V_{AC}$, 187–265 $V_{AC}$ | |
| Nominal input current | 0.6 A at 230 $V_{AC}$/1.1 A at 115 $V_{AC}$ | | 0.9 A at 230 $V_{AC}$/2.2 A at 115 $V_{AC}$ | |
| Input current peak | I/t < 1.5 A/s | | < 30 A | |
| Power factor cos φ | 0.45 capacitive at 230 $V_{AC}$/0.5 capacitive at 115 $V_{AC}$ | | 0.5 capacitive at 230 $V_{AC}$/0.58 capacitive at 115 $V_{AC}$ | |
| PFC standard (harmonics) | – | | EN 61000-3-2 | |
| | | | | |
| **Output** | | | | |
| Output voltage | 24 V ±3% | | 24 V ±1% | |
| Typical output setting range | – | | 22–30 V DC | |
| Output direct current | 0–2 A | | 0–5 A | |
| Max. power output | – | | 120 W (when set to 30 V max. 4 A) | |
| Ripple | < 50 mV | | < 50 mV | |
| Typical current limitation | 2.5 A | | 6 A | |
| Parallel operation | yes | | yes | |
| Efficiency, typical | 89% | | 89% | |
| Hold-up time | > 70 ms / 230 $V_{AC}$; > 10 ms / 115 $V_{AC}$ | | > 20 ms / 230 $V_{AC}$; > 15 ms / 115 $V_{AC}$ | |
| Line regulation | < 0.2% at UON ±15% | | < 0.2% at UON ±15% | |
| Load regulation | < 1% at 0 A -> >$I_{nominal}$ | | < 1% at 0 A -> >$I_{nominal}$ | |
| Dynamics | < 2 ms at 10 <—> 90% $I_{nominal}$ | | < 2 ms at 10 <—> 90% $I_{nominal}$ | |
| Current limitation | permanently short-circuit proof (see graphs on page 530) | | permanently short-circuit proof (see graphs on page 530) | |
| Overrun-proof/open-circuit proof | yes | | yes | |
| Output overcurrent switch-off | yes | | yes | |
| Output security | VDE 0805/EN 60950/IEC 950/UL 1959 | | VDE 0805/EN 60950/IEC 950/UL 1959 | |
| Class of Protection | safety extra-low voltage (SELV) EN 60950 | | safety extra-low voltage (SELV) EN 60950 | |
| Degree of protection | class I at 149002-31001/149002-21001 | | class I at 149002-31001/149002-21001 | |
| Additional data, standards | IP 20 | | IP 20 | |
| Leakage current | < 0.25 mA (47—63 Hz mains frequency) | | < 0.75 mA (47—63 Hz mains frequency) | |
| Ambient temperature | –10 °C...+70 °C at free convection | | –10 °C...+70 °C at free convection | |
| Power derating | 2.5%/K from +60 °C (see graphs on page 530) | | 2.5%/K from +60 °C (see graphs on page 530) | |
| Storage temperature | –25 °C...+85 °C | | –25 °C...+85 °C | |
| EMC CE-certified | EN 55011, EN 61000-6-1/-2 | | EN 55011, EN 61000-6-1/-2 | |
| | EN 55011/EN 55022 class B | | EN 55011/EN 55022 class B | |
| | 8 KV contact discharge, 15 KV air discharge | | 8 KV contact discharge, 15 KV air discharge | |
| | 10 V/m | | 10 V/m | |
| | 4 kV input, 2 kV output / capacitive coupling | | 4 kV input, 2 kV output / capacitive coupling | |
| | 4 KV unbalanced, 4 KV balanced | | 4 kV unbalanced, 4 kV balanced | |
| | 10 V, 150 kHz...80 MHz | | 10 V, 150 kHz...80 MHz | |
| Weight | approx. 0.2 kg | | approx. 0.9 kg | |
| Installation | slide for mounting to DIN rail DIN EN 60715 | | slide for mounting to DIN rail DIN EN 60715 | |
| Installation position | panel-mounted; input connectors on top, output conn. at the bottom | | panel-mounted; input connectors on top, output conn. at the bottom | |



Subject to change without further notice

# wipos

Dimensions (mm): W x H x D

**24 V / 10 A**
**Primary switch-mode regulator**
CE; Approvals: UL, CSA and GL pending
70 x 153.5 x 164

**24 V / 20 A**
**Primary switch-mode regulator**
CE; Approvals: UL, CSA and GL pending
86 x 233 x 173

| **Description** | Type | Part no. | Std. pack | Type | Part no. | Std. pack |
|---|---|---|---|---|---|---|
| 48 W | | | | | | |
| 120 W | | | | | | |
| 240 W | mains power supply 24 V / 10A | 81.000.6040.0 | 1 | | | |
| 480 W | | | | power supply 24 V / 20 A | 81.000.6050.0 | 1 |
| | | | | | | |
| **Output power, current limitation characteristic** | **see page 10** | | | **see page 10** | | |
| | | | | | | |
| **Input** | | | | | | |
| Nominal input voltage | 115/230 $V_{AC}$, 47–63 Hz (selectable input) | | | 230 $V_{AC}$, 47–63 Hz | | |
| Input voltage range | 93–132 $V_{AC}$, 187–265 $V_{AC}$ | | | 190–265 $V_{AC}$ | | |
| Nominal input current | 1.8 A at 230 $V_{AC}$/4.2 A at 115 $V_{AC}$ | | | 3.0 A at 230 $V_{AC}$ | | |
| Input current peak | < 30 A | | | < 30 A | | |
| Power factor cos φ | 0.5 capacitive at 230 $V_{AC}$/0.58 capacitive at 115 $V_{AC}$ | | | 0.82 capacitive at 230 $V_{AC}$ | | |
| PFC standard (harmonics) | EN 61000-3-2 | | | EN 61000-3-2 | | |
| | | | | | | |
| **Output** | | | | | | |
| Output voltage | 24 V ±1% | | | 24 V ±1% | | |
| Typical setting range | 22–30 V DC | | | 23-29 V DC | | |
| Output direct current | 0-10 A | | | 0-20 A | | |
| Max. power output | 240 W (when set to 30 V max. 8 A) | | | 480 W (when set to 29 V max. 16 A) | | |
| Ripple | < 50 mV | | | < 50 mV | | |
| Typical current limitation | 12 A | | | 22 A | | |
| Parallel operation | yes | | | yes | | |
| Efficiency, typical | 90% | | | 89% | | |
| Hold-up time | > 35 ms / 230 $V_{AC}$; > 30 ms / 115 V AC | | | > 20 ms / 230 $V_{AC}$ | | |
| Line regulation | < 0.2% at $U_{ON}$ ±15% | | | < 0.2% at $U_{ON}$ ±15% | | |
| Load regulation | < 1% at 0 A -> >$I_{nominal}$ | | | < 1% at 0 A -> >$I_{nominal}$ | | |
| Dynamics | < 2 ms at 10 <—> 90% $I_{nominal}$ | | | < 2 ms at 10 <—> 90% $I_{nominal}$ | | |
| Current limitation | permanently short-circuit proof (see graph on page 10) | | | permanently short-circuit proof (see graph on page 10) | | |
| Overrun-proof/open-circuit proof | yes | | | yes | | |
| Output overcurrent switch-off | yes | | | yes | | |
| Output security | VDE 0805/EN 60950/IEC 950/UL 1959 | | | VDE 0805/EN 60950/IEC 950/UL 1959 | | |
| | safety extra-low voltage (SELV) EN 60950 | | | safety extra-low voltage (SELV) EN 60950 | | |
| Class of protection | class I at 149002-31001/149002-21001 | | | class I at 149002-31001/149002-21001 | | |
| Degree of protection | IP 20 | | | IP 20 | | |
| Leakage current | < 0.75 mA (47—63 Hz mains frequency) | | | < 3.50 mA (47—63 Hz mains frequency) | | |
| Ambient temperature | –10 °C...+70 °C at free convection | | | –10 °C...+70 °C at free convection | | |
| Power derating | 2.5%/K from +60 °C (see graph on page 10) | | | 2.5%/K from +60 °C (see graph on page 10) | | |
| Storage temperature | –25 °C...+85 °C | | | –25 °C...+85 °C | | |
| EMC CE-certified | EN 55011, EN 61000-6-1/-2 | | | EN 55011, EN 61000-6-1/-2 | | |
| Radio interference suppression | EN 55011/EN 55022 class B | | | EN 55011/EN 55022 class B | | |
| Static discharge ESD (IEC 1000-4-2) | 8 KV contact discharge, 15 KV air discharge | | | 8 KV contact discharge, 15 KV air discharge | | |
| Electromagnetic fields (IEC 1000-4-3) | 10 V/m | | | 10 V/m | | |
| Burst (IEC 1000-4-4) | 4 kV input, 2 kV output / capacitive coupling | | | 4 kV input, 2 kV output / capacitive coupling | | |
| Surge (IEC 1000-4-5) | 4 KV unbalanced, 4 KV balanced | | | 4 kV unbalanced, 4 kV balanced | | |
| Conducted interference type (ENV 50141, IEC 1000-4-6) | 10 V, 150 kHz...80 MHz | | | 10 V, 150 kHz...80 MHz | | |
| Weight | approx. 1.1 kg | | | approx. 2.0 kg | | |
| Installation | slide for DIN rail mounting DIN EN 60715 | | | slide for DIN rail mounting DIN EN 60715 | | |
| Mounting position | panel-mounted; input connectors on top, output conn. at the bottom | | | panel-mounted; input connectors on top, output conn. at the bottom | | |
| | | | | | | |

# Single-phase switch-mode power supplies horizontal design

wipos

| Dimensions (mm): W x H x D | **24 V / 5 A**<br>**Single-phase primary switch-mode regulator**<br>CE; Approvals: cULus, and CSA pending<br>147 x 105 x 86 | | | **24 V / 10 A**<br>**Single-phase primary switch-mode regulator**<br>CE; Approvals: cULus, and CSA pending<br>205 x 105 x 86 | | |
|---|---|---|---|---|---|---|
| **Description** | Type | Part no. | Std. pack | Type | Part no. | Std. pack |
| 120 W | mains power supply 24 V / 5 A | 81.000.6031.0 | 1 | | | |
| 240 W | | | | mains power supply 24 V / 10 A | 81.000.6041.0 | 1 |
| 480 W | | | | | | |
| | | | | | | |
| **Output power, current limitation characteristic** | **see graphs on page 530** | | | **see graphs on page 530** | | |
| | | | | | | |
| **Input** | | | | | | |
| Nominal input voltage | 105-250 $V_{AC}$, 47–63 Hz (universal input) | | | 105-125 $V_{AC}$ / 210–250 $V_{AC}$, 47–63 Hz | | |
| Input voltage range | 97-265 $V_{AC}$, 47–63 Hz | | | 97-132 $V_{AC}$ / 195-265 $V_{AC}$, 47–63 Hz, can switched over to solder bridge | | |
| Nominal input current | 1.23 A at 230 $V_{AC}$ | | | 4.0 A at 115230 $V_{AC}$ / 2.2 A at 230 $V_{AC}$ | | |
| Input current peak | < 30 A | | | < 30 A | | |
| Power factor cos φ | 0.52 capacitive at 230 $V_{AC}$ | | | 0.52 capacitive at 230 $V_{AC}$ | | |
| Fuse | 5 x 20 mm, T 3,15 A / 250 V internal | | | 5 x 20mm, T 6.3 A / 250 V internal | | |
| | | | | | | |
| **Output** | | | | | | |
| Output voltage | 24 V DC ±1% | | | 24 V DC ±1% | | |
| Typical setting range | 22.5-27.5 V DC | | | 22.5-27.5 V DC | | |
| Output direct current | 0-5 A | | | 0-10 A | | |
| Ripple | < 100 mV | | | < 100 mV | | |
| Typical current limitation | 6 A | | | 12.5 A | | |
| Parallel operation | yes | | | yes | | |
| Efficiency, typical | 86% | | | 89% | | |
| Hold-up time | > 80 ms / 230 $V_{AC}$; > 15 ms / 115 $V_{AC}$ | | | > 15 ms / 230 $V_{AC}$ | | |
| Line regulation | < 0.2% at $U_{ON}$ ±15% | | | < 0.2% at $U_{ON}$ ±15% | | |
| Regulation | < 1% at 0 A -> >$I_{nominal}$ | | | < 1% at 0 A -> >$I_{nominal}$ | | |
| Dynamics | < 2 ms at 10 <—> 90% $I_{nominal}$, overshoot < 2% | | | < 2 ms at 10 <—> 90% $I_{nominal}$, overshoot < 2% | | |
| Current limitation | permanently short-circuit proof (see graphs on page 530) | | | permanently short-circuit proof (see graphs on page 530) | | |
| Overrun-proof/open-circuit proof | yes | | | yes | | |
| Output overcurrent switch-off | yes | | | yes | | |
| Output security | VDE 0805/EN 60950/IEC 950/UL 1959 | | | VDE 0805/EN 60950/IEC 950/UL 1959 | | |
| | safety extra-low voltage (SELV) EN 60950 | | | safety extra-low voltage (SELV) EN 60950 | | |
| Class of protection | class I | | | class I | | |
| Degree of protection | IP 20 | | | IP 20 | | |
| Leakage current | < 0.75 mA (47—63 Hz mains frequency) | | | < 0.75 mA (47—63 Hz mains frequency) | | |
| Ambient temperature | 0 °C...+70 °C at free convection | | | 0 °C...+70 °C at free convection | | |
| Power derating | 2.5%/K from +60 °C (see graph on page 10) | | | 2.5%/K from +60 °C (see graph on page 10) | | |
| Storage temperature | –25 °C...+85 °C | | | –25 °C...+85 °C | | |
| EMC CE-certified | EN 61000-6-3/-4, EN 61000-6-1/-2 | | | EN 61000-6-3/-4, EN 61000-6-1/-2 | | |
| Radio interference suppression | EN 55011/EN 55022 class B | | | EN 55011/EN 55022 class B | | |
| Static discharge ESD (IEC 1000-4-2) | 8 KV contact discharge, 15 KV air discharge | | | 8 KV contact discharge, 15 KV air discharge | | |
| Electromagnetic fields (IEC 1000-4-3) | 10 V/m | | | 10 V/m | | |
| Burst (IEC 1000-4-4) | 4 kV input, 2 kV output / capacitive coupling | | | 4 kV input, 2 kV output / capacitive coupling | | |
| Surge (IEC 1000-4-5) | 4 KV unbalanced, 4 KV balanced | | | 4 kV unbalanced, 4 kV balanced | | |
| Conducted interference type (ENV 50141, IEC 1000-4-6) | 10 V, 150 kHz...80 MHz | | | 10 V, 150 kHz...80 MHz | | |
| Weight | approx. 0.8 kg | | | approx. 1.2 kg | | |
| Installation | snap-on DIN rail fixation DIN EN 60715 | | | snap-on DIN rail fixation DIN EN 60715 | | |
| Installation position | panel-mounted; input connectors on top, output conn. at the bottom | | | panell-mounted; input connectors on top, output conn. at the bottom | | |



Subject to change without further notice

# wipos

## 24 V / 20 A
## Single-phase primary switch-mode regulator

Dimensions (mm): W x H x D
240 x 130 x 86

CE; Approvals: cULus, CSA and CSA pending

| Description | Type | Part no. | Std. pack |
|---|---|---|---|
| 120 W | | | |
| 240 W | | | |
| 480 W | mains power supply 24 V / 20 A | 81.000.6051.0 | 1 |
| | | | |
| **output power, current limitation characteristic** | **see graphs on page 530** | | |
| | | | |
| **Input** | | | |
| Nominal input voltage | 210–250 $V_{AC}$, 47–63 Hz (universal input) | | |
| Input voltage range | 195–265 $V_{AC}$, 47–63 Hz | | |
| Nominal input current | 4.2 A at 230 $V_{AC}$ | | |
| Input current peak | < 30 A | | |
| Power factor cos φ | 0.53 capacitive at 230 $V_{AC}$ | | |
| Fuse | 5 x 20mm, T 10 A / 250 V internal | | |
| | | | |
| **Output** | | | |
| Output voltage | 24 V DC ±1% | | |
| Typical setting range | 22.5-27.5 V DC | | |
| Output direct current | 0-20 A | | |
| Ripple | < 100 mV | | |
| Typical current limitation | 25 A | | |
| Parallel operation | yes | | |
| Efficiency, typical | 88% | | |
| Hold-up time | > 15 ms / 115 $V_{AC}$ | | |
| Line regulation | < 0.2% at $U_{ON}$ ±15% | | |
| Load regulation | < 1% at 0 A -> >$I_{nominal}$ | | |
| Dynamics | < 2 ms at 10 <—> 90% $I_{nominal}$, overshoot < 2% | | |
| Current limitation | permanently short-circuit proof (see graphs on page 530) | | |
| Overrun-proof/open-circuit proof | yes | | |
| Output overvoltage switch-off | yes | | |
| Output security | VDE 0805/EN 60950/IEC 950/UL 1959 | | |
| | safety extra-low voltage (SELV) EN 60950 | | |
| Class of protection | class I | | |
| Degree of protection | IP 20 | | |
| Leakage current | < 3.50 mA (47—63 Hz mains frequency) | | |
| Ambient temperature | 0 °C...+70 °C at free convection | | |
| Power derating | 2.5%/K from +60 °C (see graphs on page 530) | | |
| Storage temperature | –25 °C...+85 °C | | |
| EMC CE-certified | EN 61000-6-3/-4, EN 61000-6-1/-2 | | |
| Radio interference suppression | EN 55011/EN 55022 class B | | |
| Static discharge ESD (IEC 1000-4-2) | 8 KV contact discharge, 15 KV air discharge | | |
| Electromagnetic fields (IEC 1000-4-3) | 10 V/m burst (IEC 1000-4-4) 4 kV input, 2 kV output / capacitive coupling | | |
| Surge (IEC 1000-4-5) | 4 kV unbalanced, 4 kV balanced | | |
| Conducted interference type (ENV 50141, IEC 1000-4-6) | 10 V, 150 kHz...80 MHz | | |
| Weight | approx. 1.9 kg | | |
| Installation | snap-on DIN rail fixation DIN EN 60715 | | |
| Mounting position | panel-mounted; input connectors on top, output conn. at the bottom | | |

# Three-phase switch-mode power supplies – horizontal design

wipos

**24 V / 20 A**
**Three-phase primary switch-mode regulator**
CE; Approvals: cULus, and CSA pending
240 x 130 x 86

**24 V / 40 A**
**Three-phase primary switch-mode regulator**
CE; Approvals: cULus, and CSA pending
296 x 176 x 86

Dimensions (mm): W x H x D

| Description | Type | Part no. | Std. pack | Type | Part no. | Std. pack |
|---|---|---|---|---|---|---|
| 480 W | mains power supply 24 V / 20A | 81.000.6053.0 | 1 | | | |
| 960 W | | | | mains power supply 24 V / 40 A | 81.000.6063.0 | 1 |
| | | | | | | |
| **Output power, current limitation characteristic** | **see graphs on page 530** | | | **see graphs on page 530** | | |
| | | | | | | |
| **Input** | | | | | | |
| Nominal input voltage | 3 x 360–500 $V_{AC}$, 47–63 Hz | | | 3 x 360–500 $V_{AC}$, 47–63 Hz | | |
| Input voltage range | 3 x 340-550 $V_{AC}$, 47–63 Hz | | | 3 x 340-550 $V_{AC}$, 47–63 Hz | | |
| Nominal input current | 3 x 1.5 A at 3 x 400 $V_{AC}$ | | | 3 x 3 A at 3 x 400 $V_{AC}$ | | |
| Input current peak | < 50 A | | | < 50 A | | |
| Power factor cos w | 0.53 capacitive at 400 $V_{AC}$ | | | 0.53 capacitive at 400 $V_{AC}$ | | |
| | | | | | | |
| **Output** | | | | | | |
| Output voltage | 24 V DC ±1% | | | 24 V DC ±1% | | |
| Typical setting range | 22.5-27.5 V DC | | | 22.5-27.5 V DC | | |
| Output direct current | 0-20 A | | | 0-40 A | | |
| Ripple | < 100 mV | | | < 100 mV | | |
| Typical current limitation | 25 A | | | 45 A | | |
| Parallel operation | yes | | | yes | | |
| Efficiency, typical | 90% | | | 90% | | |
| Hold-up time | > 5 ms / 400 $V_{AC}$ | | | > 5 ms / 400 $V_{AC}$ | | |
| Line regulation | < 0.2% at $U_{ON}$ ±15% | | | < 0.2% at $U_{ON}$ ±15% | | |
| Load regulation | < 1% at 0 A -> >$I_{nominal}$ | | | < 1% at 0 A -> >$I_{nominal}$ | | |
| Dynamics | < 2 ms at 10 <—> 90% $I_{nominal}$, overshoot < 2% | | | < 2 ms at 10 <—> 90% $I_{nominal}$, overshoot < 2% | | |
| Current limitation | permanently short-circuit proof (see graphs on page 530) | | | permanently short-circuit proof (see graphs on page 530) | | |
| Overrun-proof/open-circuit proof | yes | | | yes | | |
| Output overvoltage switch-off | yes | | | yes | | |
| Output security | VDE 0805/EN 60950/IEC 950/UL 1959 | | | VDE 0805/EN 60950/IEC 950/UL 1959 | | |
| | safety extra-low voltage (SELV) EN 60950 | | | safety extra-low voltage (SELV) EN 60950 | | |
| Class of protection | class I | | | class I | | |
| Degree of protection | IP 20 | | | IP 20 | | |
| Leakage current | < 3.50 mA (47—63 Hz mains frequency) | | | < 3.50 mA (47—63 Hz mains frequency) | | |
| Ambient temperature | 0 °C...+70 °C at free convection | | | 0 °C...+70 °C at free convection | | |
| Power derating | 2.5%/K from +60 °C (see graphs on page 530) | | | 2.5%/K from +60 °C (see graphs on page 530) | | |
| Storage temperature | –25 °C...+85 °C | | | –25 °C...+85 °C | | |
| EMC CE-certified | EN 61000-6-3/-4, EN 61000-6-1/-2 | | | EN 61000-6-3/-4, EN 61000-6-1/-2 | | |
| Radio interference suppression | EN 55011/EN 55022 class B | | | EN 55011/EN 55022 class B | | |
| Static discharge ESD (IEC 1000-4-2) | 8 KV contact discharge, 15 KV air discharge | | | 8 KV contact discharge, 15 KV air discharge | | |
| Electromagnetic fields (IEC 1000-4-3) | 10 V/m | | | 10 V/m | | |
| Burst (IEC 1000-4-4) | 4 kV input, 2 kV output / capacitive coupling | | | 4 kV input, 2 kV output / capacitive coupling | | |
| Surge (IEC 1000-4-5) | 4 KV unbalanced, 4 KV balanced | | | 4 kV unbalanced, 4 kV balanced | | |
| Conducted interference type (ENV 50141, IEC 1000-4-6) | 10 V, 150 kHz...80 MHz | | | 10 V, 150 kHz...80 MHz | | |
| Weight | approx. 1.9 kg | | | approx. 3.6 kg | | |
| Installation | snap-on DIN rail fixation DIN EN 60715 | | | snap-on DIN rail fixation DIN EN 60715 | | |
| Installation position | panel-mounted; input connectors on top, output conn. at the bottom | | | panel-mounted; input connectors on top, output conn. at the bottom | | |



Subject to change without further notice

# Power Supply
## with overload protection and short circuit protection

# power supply

| | **Power supply unit 24 V / 0,3 A unregulated**<br>Approvals: CSA | | | **Power supply unit 24 V / 1 A regulated** | | |
|---|---|---|---|---|---|---|
| Dimensions (mm): W x H x D | 70.5 x 80 x 66 | | | 138 x 80 x 95 | | |
| **Description** | Type | Part No. | Box Qty | Type | Part No. | Box Qty |
| | WRS-T115/230-399M | 81.000.3000.0 | 1 | WPS-115/230-24 V1A | 81.000.3010.0 | 1 |
| **Note for user:** | | | | | | |
| Before commissioning the power supply units, | | | | | | |
| an external wire jumper (1 mm²) must be inserted | | | | | | |
| by the user to select to the input voltage! | | | | | | |
| | | | | | | |
| **Wiring diagram, dimensions, diagram** | **See page 531** | | | **See page 531** | | |
| | | | | | | |
| **Input data** | | | | | | |
| Input voltage ($U_E$) | 115/230 V AC +6%/–10%, 50–60 Hz | | | 115/230 V AC +6%/–10%, 50–60 Hz | | |
| 115 V AC** | Insert external jumper between 1–3, 2–4 | | | Insert external jumper between 1–3, 2–4 | | |
| 230 V AC** | Insert external jumper between 2–3 | | | Insert external jumper between 2–3 | | |
| Input current | | | | | | |
| at $U_E$ = 115 V AC | ca. 100 mA | | | ca. 450 mA | | |
| at $U_E$ = 230 V AC | ca. 50 mA | | | ca. 225 mA | | |
| Power consumption | ca. 8 VA | | | ca. 52 VA | | |
| Input fuse | | | | | | |
| F1 (5 x 20 mm at $U_E$ = 115 V AC)** | 160 mA T | | | 500 mA T | | |
| F1 (5 x 20 mm at $U_E$ = 230 V AC) | 80 mA T | | | 250 mA T | | |
| | | | | | | |
| ** carried out by the user | | | | | | |
| | | | | | | |
| **Output data** | | | | | | |
| Nominal voltage ($U_A$) | 24 V DC (note voltage/current diagram page 531) | | | 24 V DC ±5% | | |
| Nominal current | 300 mA (note voltage/current diagram page 531) | | | 1 A | | |
| Ripple voltage (load dependent) | < 2 $V_{SS}$ | | | type 20 mV | | |
| (at full load operation and min. input voltage) | – | | | maximum 1,5 V | | |
| Output fuse F2 (5 x 20 mm) | 315 mA T | | | short circuit proof | | |
| Bridging facility using jumper | Negative pole | | | Negative pole | | |
| (Jumper not included with supply) | | | | | | |
| Maximum jumper current | 0.5 A | | | 1 A | | |
| Status display | LED | | | LED | | |
| | | | | | | |
| | | | | | | |
| **General data** | | | | | | |
| Isolation voltage between input/output | 4 kV, 50 Hz, 1min | | | 4 kV | | |
| Nominal operating mode | 100% ED | | | 100% ED | | |
| Ambient temperature | –25 °C...+50 °C | | | 0 °C...+40 °C | | |
| Storage temperature | –40 °C...+85 °C | | | –40 °C...+85 °C | | |
| Type of connection | Screw terminal | | | Screw terminal | | |
| Wire range | 22 – 12 AWG | | | 22 – 12 AWG | | |
| Finely stranded | 0.5 – 2.5 mm² | | | 0.5 – 2.5 mm² | | |
| Single core | 0.5 – 4 mm² | | | 0.5 – 4 mm² | | |
| Safety transformer according to | VDE 0551 (EN 60742) | | | VDE 0551 (EN 60742) | | |
| Installation on DIN rail | TS 35 | | | TS 35 | | |
| Mounting position | horizontal | | | horizontal | | |
| | | | | | | |
| | | | | | | |
| **Accessories** | | | | | | |
| Jumper (for bridging facility) | | Z8.000.0103.4 | 10 | | Z8.000.0103.4 | 10 |



Subject to change without further notice

## Power transformer for 10 V, 18 V, 21 V and 24 V AC

Dimensions (mm): W x H x D
83 x 96 x 90

## NTU
## Universal power transformer

| Description | Type | Part No. | Box Qty |
|---|---|---|---|
| | WPS-115/230-60 VA | 87.230.1553.0 | 1 |
| **Note for user:** | | | |
| Before commissioning the power supply units, | | | |
| an external wire jumper (1 mm²) must be inserted | | | |
| by the user to select to the input voltage! | | | |
| **Wiring diagram, dimensions diagram** | **See page 531** | | |
| | | | |
| **Input data** | | | |
| Input voltage ($U_E$) | 115/230 V AC +6%/–10%, 50–60 Hz | | |
| 115 V AC** | Insert external jumper between 1–3, 2–4 | | |
| 230 V AC** | Insert external jumper between 2–3 | | |
| Input fuse | | | |
| F1 (5 x 20 mm at $U_E$ = 115 V AC)** | 0.8 mA T | | |
| F1 (5 x 20 mm at $U_E$ = 230 V AC) | 0.4 mA T | | |
| | | | |
| Suppression circuit | Varistor | | |
| | | | |
| ** carried out by the user | | | |
| | | | |
| **Output data** | | | |
| Output voltage ($U_A$) | 10 V, 18 V, 21 V, 24 V AC | | |
| Maximum output current | 2.5 A AC | | |
| Maximum output power | 60 VA | | |
| | | | |
| | | | |
| **General data** | | | |
| Isolation voltage between input/output | 4 kV | | |
| Nominal operating mode | 100% ED | | |
| Ambient temperature | 0 °C...+40 °C | | |
| Transport temperature | –25 °C...+70 °C | | |
| Storage temperature | –25 °C...+55 °C | | |
| Type of connection | Screw terminal | | |
| Wire range | 22 – 12 AWG | | |
| Finely stranded | 0.14 – 2.5 mm² | | |
| Single core | 0.14 – 4 mm² | | |
| Safety transformer according to | VDE 0551 (EN 60742) | | |
| Protection against accidental contact | DIN 40050 (IP 20) | | |
| Installation on DIN rail | TS 35 | | |
| Mounting position | horizontal | | |

Suggested circuits for a complete power unit, consisting of the universal transformer 87.230.1553.0 and the respective rectifier module and/or fixed voltage regulator.

| Output voltage V ⎓ | Load current A | Type of switching | Rectifier/fixed voltage regulator | Secondary voltage V ~ |
|---|---|---|---|---|
| 5 | 1 | regulated | 87.230.0453.0 | 10 |
| 12 | 1 | regulated | 87.230.0553.0 | 18 |
| 15 | 1 | regulated | 87.230.0653.0 | 21 |
| 24 | 1 | regulated | 87.230.0753.0 | 24 |
| 24 | 2.0 | unregulated | 87.230.2053.0 | 18 |
| 24 | 2.5 | unregulated | 81.000.1000.0 | 18 |

# Power Supply
# Rectifier modules

BGL

**for generating filtered DC voltage**

| | **Rectifier module BGL 2,5 A** | | | **Rectifier module BGL 3A** | | |
|---|---|---|---|---|---|---|
| Dimensions (mm): W x H x D | 38.5 x 80 x 75,7 | | | 61 x 96 x 62.7 | | |
| **Description** | Type | Part No. | Box Qty | Type | Part No. | Box Qty |
| | BGL-25VAC-2,5ADC | 81.000.1000.0 | 1 | BGL-40VAC-3ADC | 87.230.2053.0 | 1 |
| **Wiring diagram, dimensions** | **See page 532** | | | **See page 532** | | |
| **Input data** | | | | | | |
| Maximum input voltage | 25 V AC | | | 40 V AC | | |
| Frequency | 50–60 Hz | | | 50–60 Hz | | |
| On-state voltage | 1.8 V | | | ≤ 2 V | | |
| **Output data** | | | | | | |
| Output voltage maximal | 40 V DC | | | 63 V DC | | |
| Maximum nominal current $T_U$ = 45 °C | 2.5 A | | | 3 A | | |
| **General data** | | | | | | |
| Ambient temperature | –25 °C...+45 °C | | | –25 °C...+45 °C | | |
| Storage temperature | –25 °C...+85 °C | | | –25 °C...+85 °C | | |
| Wire range | 22 – 12 AWG | | | 22 – 12 AWG | | |
| Finely stranded | 0.5 – 2.5 $mm^2$ | | | 0.5 – 2.5 $mm^2$ | | |
| Single core | 0.5 – 4 $mm^2$ | | | 0.5 – 4 $mm^2$ | | |
| Installation on DIN rail | TS 35 or TS 32 | | | TS 35 or TS 32 | | |
| Mounting position | – | | | horizontal (Kühlkörper nach oben) | | |



Subject to change without further notice

# Power Supply

FSR

## Fixed voltage regulator with thermal overload protection

Dimensions (mm): W x H x D
61 x 96 x 65.5

## Fixed voltage regulator FSR 1 A

| Description | Type | Part No. | Box Qty | |
|---|---|---|---|---|
| | FSR-25 VAC-5 V1A | 87.230.0453.0 | 1 | |
| | FSR-25 VAC-12 V1A | 87.230.0553.0 | 1 | |
| | FSR-25 VAC-15 V1A | 87.230.0653.0 | 1 | |
| | FSR-25 VAC-24 V1A | 87.230.0753.0 | 1 | |
| | | | | |
| **Wiring diagram, dimensions, derating** | **See page 533** | | | |
| | | | | |
| **Input data** | | | | |
| Maximum input voltage | 25 V AC | 25 V AC | 25 V AC | 28 V AC |
| Minimum input voltage at $I_L$ max. | 11 V AC | 17 V AC | 19 V AC | 25 V AC |
| Open circuit power consumption | 60 mA | 60 mA | 60 mA | 60 mA |
| Input fuse (5 x 20 mm) | 1.6 mA T | 1.6 mA T | 1.6 mA T | 1.6 mA T |
| | | | | |
| **Output data** | | | | |
| | | | | |
| Output voltage | 5 V DC ± 5% | 12 V DC ± 5% | 15 V DC ± 5% | 24 V DC ± 5% |
| Nominal current | 1 A | 1 A | 1 A | 1 A |
| Ripple voltage | 30 mV | 30 mV | 30 mV | 30 mV |
| Status display | LED | LED | LED | LED |
| | | | | |
| | | | | |
| **General data** | | | | |
| | | | | |
| Ambient temperature | 0 °C...+45 °C | 0 °C...+45 °C | 0 °C...+45 °C | 0 °C...+45 °C |
| Storage temperature | –25 °C...+85 °C | –25 °C...+85 °C | –25 °C...+85 °C | –25 °C...+85 °C |
| | | | | |
| Wire range | 22 – 12 AWG | 22 – 12 AWG | 22 – 12 AWG | 22 – 12 AWG |
| Finely stranded | 0.5 – 2.5 $mm^2$ | 0.5 – 2.5 $mm^2$ | 0.5 – 2.5 $mm^2$ | 0.5 – 2.5 $mm^2$ |
| Single core | 0.5 – 4 $mm^2$ | 0.5 – 4 $mm^2$ | 0.5 – 4 $mm^2$ | 0.5 – 4 $mm^2$ |
| | | | | |
| Installation on DIN rail | TS 35 or TS 32 | TS 35 or TS 32 | TS 35 or TS 32 | TS 35 or TS 32 |
| Mounting position | horizontal | horizontal | horizontal | horizontal |



Subject to change without further notice

# FSR

**With overload protection and short circuit protection**

## Fixed voltage regulator FSR 3 A

Dimensions (mm): W x H x D
115 x 96 x 81

Approvals:

| Description | Type | Part No. | Box Qty |
|---|---|---|---|
| | FSR-38 VDC-24 V3A | 87.230.1953.0 | 1 |
| | | | |
| | | | |
| | | | |
| | | | |
| **Wiring diagram, dimensions** | **See page 533** | | |
| | | | |
| **Input data** | | | |
| Maximum input voltage | 38 V DC | | |
| Minimum input voltage | 28 V DC | | |
| Open circuit power consumption | 60 mA | | |
| | | | |
| | | | |
| **Output data** | | | |
| Output voltage (with linear control) | 24 V DC ± 4%, short circuit proof | | |
| Nominal current | 3 A DC | | |
| Typical ripple voltage (load dependent) | 50 $mV_{SS}$ | | |
| Fuse (5 x 20 mm) | MT 3,15 A | | |
| Suppression circuit | Diode | | |
| Status display | LED green | | |
| | | | |
| **General data** | | | |
| Ambient temperature | –25 °C...+45 °C | | |
| Storage temperature | –25 °C...+85 °C | | |
| Nominal operating mode | 100% ED | | |
| | | | |
| Wire range | 22 – 12 AWG | | |
| Finely stranded | 0.14 – 2.5 $mm^2$ | | |
| Single core | 0.14 – 4 $mm^2$ | | |
| | | | |
| Installation on DIN rail | TS 35 or TS 32 | | |
| Mounting position | horizontal (heat sink at the top) | | |
| Weight | approx. 400 g | | |

electronics

wipos

**Derating: output power**

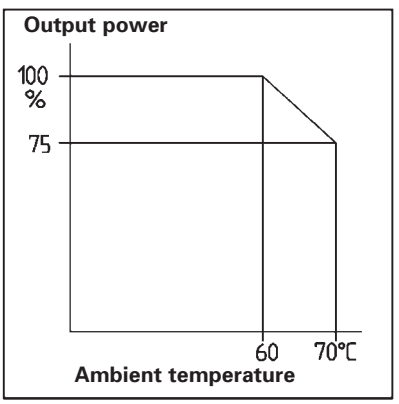


**Current limitation characteristic:**
**Single-phase power supply,**
**vertical design:**
**2 A**

**Single-phase power supply,**
**horizontal design:**
**5 A**

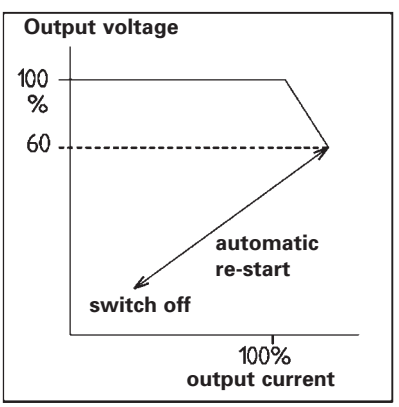


**Current limitation characteristic:**

**Single-phase power supply,**
**vertical design:**
**5 A / 10 A / 20 A**

**Single-phase/three-phase power supply,**
**horizontal design: 10 A / 20 A / 40 A**

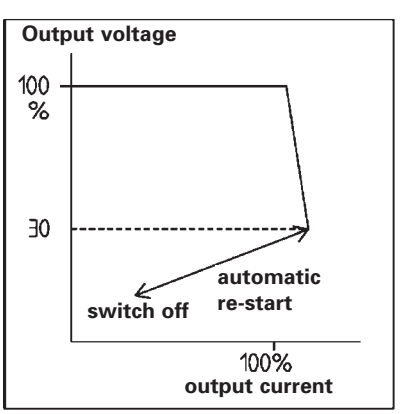




Subject to change without further notice

# power supply

## Power supply unit 24 V/0,3 A

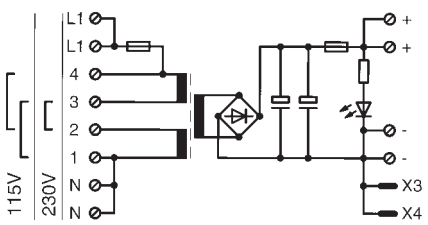


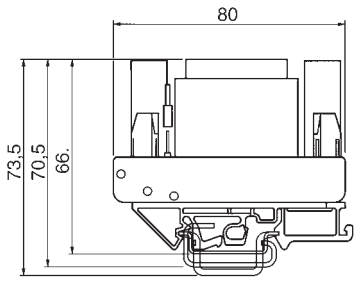


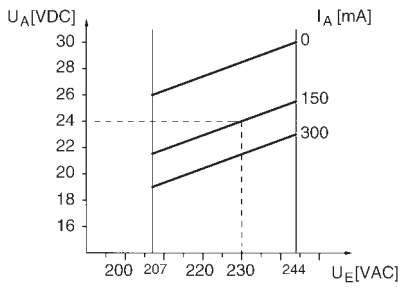


## Power supply unit 24 V/1 A

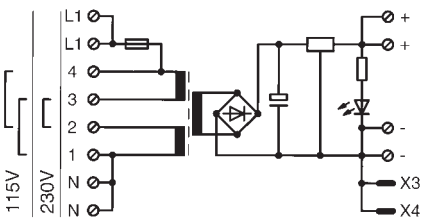


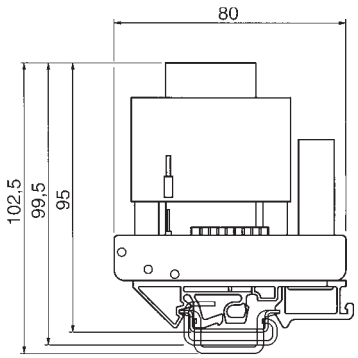


## NTU
## Universal power transformer

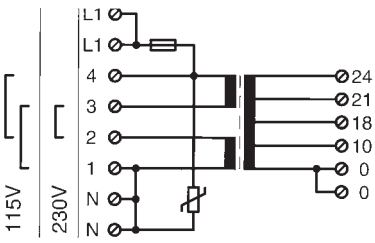


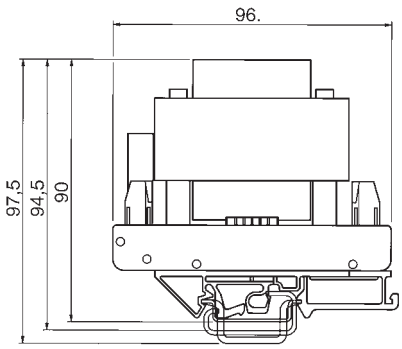


electronics

# Power Supply

BGL

## Rectifier modules

### BGL 2,5 A

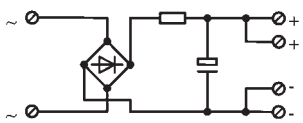


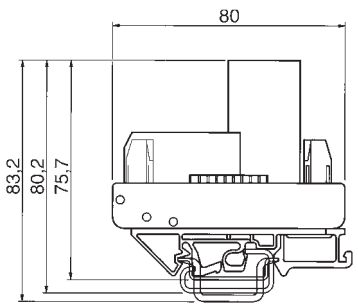


### BGL 3 A

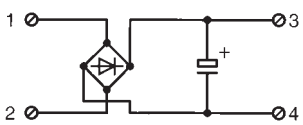


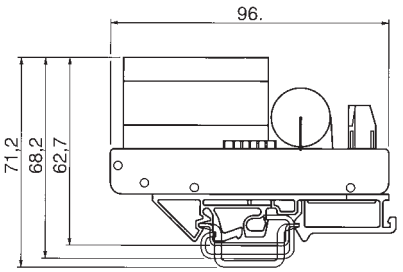




Subject to change without further notice

# FSR

## Fixed voltage

### FSR 1 A

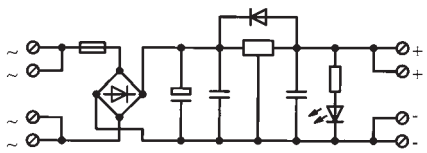


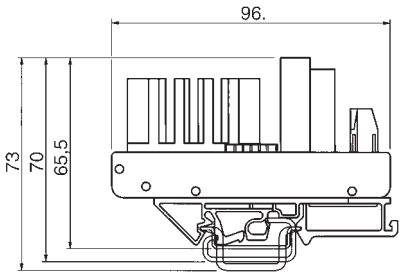


### Derating curves

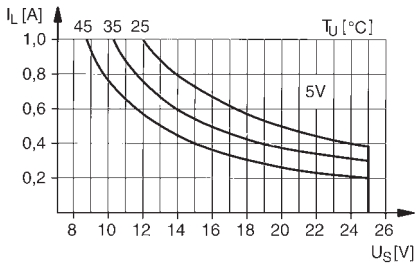


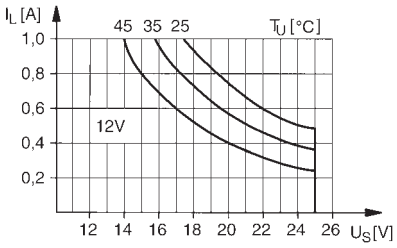


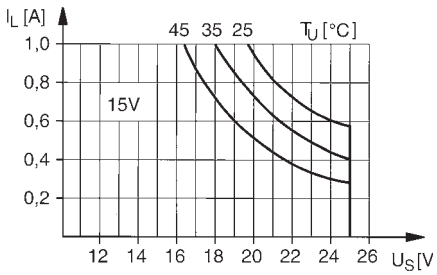


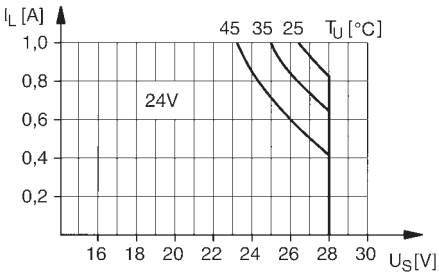


### FSR 3 A

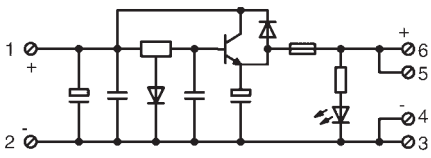


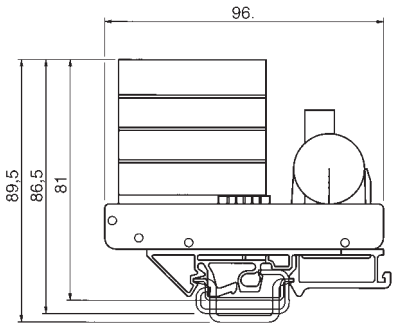


electronics

# Wieland Function Modules

***function***

**Electronic contactors**
**Thermistor overload relay**
**Lamp test module/fuse module**
**Centralised fault indication**
**Three phase system monitoring/fuse monitoring**
**Rotation indicator**
**Introduction to SSW RS 232 interface convertor**
**Interface converter**

***function*** offers

- Electronic load relay
- Machine protection via temperature monitoring
- Detection of wire breakage
- Phase failure
- Various test and monitoring modules
- Compact SSW RS 232 (for V.11 and V.24)

All Wieland Components which require CE general certification are CE certified, and identified with the CE logo.

electronics

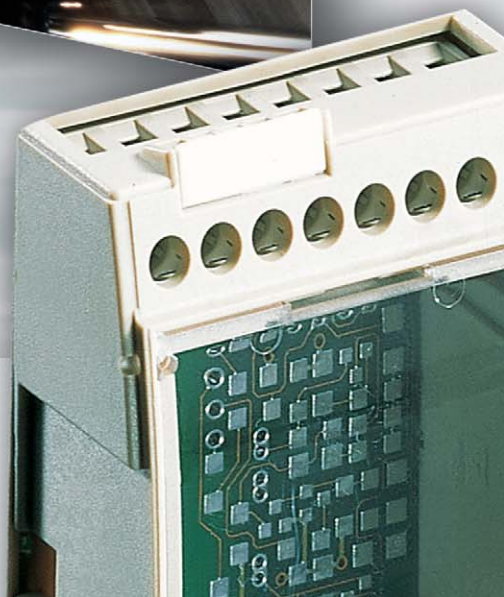

# Electronic components

## Wieland Function Modules

cemos

## General information

### *cemos*

- ❒ **Electronic three phase contactor**
- ❒ **Electronic reversing contactor**
- ❒ **DC motor-driven relay**

#### General

As opposed to mechanical contactors, electronic load relays offer the benefit of a practically unlimited service life and a high operating speed for functions.
Optocoupler technology enables a non-contacting, bounce-free and wear-resistant switching of phase loads With a switching frequency up to 10 Hz, a considerable increase in economic efficiency can already be seen compared to conventional, electromechanical components. Electronic relays are primarily used as output elements by programmable controllers.
An additional RCV protective circuit of the outputs enables a continuously reliable operation.

#### Electronic three-phase contactor

The solid-state relays can switch inductive loads such as motors on and off during zero voltage operation.

#### Electronic reversing contactor and DC motor driven relay

Apart from switching on and off, the reversing contactor allows a change in the direction of travel for three-phase inductive motors. The DC motor-driven relay performs the same function for DC motors.

Further characteristics include a reciprocal closing lockout as well as a fixed minimum changeover time between anti-clockwise and clockwise rotation.

## Thermistor overload relay TMS 101

#### General

The electronic thermistor overload relay monitors the windings of electrical machines in connection with PTC thermistor detectors. During usage, reliable protection against thermal overload is guaranteed. A bimetal overload trip unit is not required.

The areas of application are:

- ❒ Monitoring of motor temperature using short circuit current methodology
- ❒ Overload start-up (overload)
- ❒ Impeded cooling
- ❒ Excessive duty rating
- ❒ High ambient temperature
- ❒ Locked rotors
- ❒ Detection of wire breakage
- ❒ Phase failure

#### Function and structure

The thermistor overload relay TMS 101 evaluates up to six series-connected PTC resistors.
Three-phase inductive motors are usually fitted with three sensors. Pole-changing three-phase inductive motors with separate winding require six sensors. The relay is energised in normal operation i.e. the permitted temperature level has not been exceeded. If the temperature rises above the defined value, which occurs in conjunction with an increase in resistance, the relay drops out. The motor is simultaneously disconnected and the fault indicator lights up.
Due to an internal memory circuit, the motor remains switched off until the reset resistance is reached and the 'reset' button (internal or external) is pressed. Only then is it possible to start up the motor again. To detect a wire breakage, the sensor cables operate using a closed circuit current methodology.

## Monitoring modules

#### General

The increasing automation and centralisation of electrical installations requires more feedback information from the process to guarantee an error-free functional sequence.

#### Three-phase system monitoring

The most simple and effective way to monitor a three-phase network is to measure the under-voltage. The process involves recording each phase so that a voltage drop is immediately detected.
A signal is generated if the voltage falls below 85% of the mains voltage (according to VDE 0108).

#### Three-phase fuse monitoring

Three-phase induction motors are particularly at risk when a phase fails. The three-phase fuse monitoring is specially designed for monitoring supply leads of three-phase induction motors for which system monitoring is not suitable.

#### Rotation indicator

The rotation indicator monitors the phase sequence L1-L2-L3 which determines the direction of rotation for three-phase induction motors. If the phase sequence of the monitored three-phase network is incorrect, the relay of the rotation indicator remains open.

#### Lamp test module

The test module is designed for 14 indicator lights.
It is used for:

- ❒ Checking LED + lamp displays
- ❒ Avoiding undetected faults
- ❒ Preventing incorrect diagnosis

#### Fuse module

The module has been designed for 4 miniature fuses for control circuits.
The fuse module can be used for 12 to 24 V (with LED failure indicator) or 110 to 220 V (with neon lamps failure indicator).



Subject to change without further notice

# cemos

## Electronic contactors

**On/off/reverse switching functions for loads and motors**

**Zero-sequence voltage switch**
**Short closing/opening times**
**High switching frequency**

Dimensions (mm): W x H x D

**400 V AC / 2A**
**Electronic three phase contactor**
Approvals:

**400 V AC / 2,5A**
**Electronic reversing contactor**
Approvals:

| **Description** | Type | Part no. | Std. pack | Type | Part no. | Std. pack |
|---|---|---|---|---|---|---|
| Electronic three phase contactor | | 80.020.6000.0 | 1 | | | |
| Electronic reversing contactor | | | | | 80.020.6003.0 | 1 |
| DC motor contactor | | | | | | |
| | | | | | | |
| **Wiring diagrams, derating curve, limit curve** | **See pages 544-545** | | | **See pages 544-545** | | |
| | | | | | | |
| **Input** | | | | | | |
| Operating voltage | 24 V AC/DC +10%/-15% | | | 24 V DC +10%/-15% | | |
| Nominal input current AC/DC | ca. 44/21 mA | | | ca. 23 mA | | |
| Nominal input power | ca. 1 VA/0,5 W | | | ca. 0.6 W | | |
| Voltage range for "OFF" | 0...10 V AC/DC | | | 0...10 V DC | | |
| Interlocking of control inputs | | | | yes | | |
| Reversing time (delay) left/right | | | | ca. 100 ms | | |
| Protection circuit of input | Overvoltage protection | | | Overvoltage protection, polarity reverse protection | | |
| Status display | Green LED | | | Green LED | | |
| **Output** | | | | | | |
| Nominal switching voltage | 400 V AC | | | 400 V AC | | |
| Maximum switching voltage | 500 V AC | | | 500 V AC | | |
| Minimum switching voltage | 100 V AC | | | 100 V AC | | |
| Peak reverse voltage | 1200 Vs | | | 1200 Vs | | |
| Critical rate of rise voltage | 500 V/µs | | | 500 V/µs | | |
| Critical on-state voltage | 1.1 V | | | 1.1 V | | |
| Maximum current | 2 A | | | 2.5 A | | |
| Minimum current | 150 mA | | | 150 mA | | |
| Maximum peak current (10 ms) | 230 A | | | 230 A | | |
| Typical residual current | 6 mA | | | 6 mA | | |
| Power factor cos φ | ≥ 0.5 | | | ≥ 0.5 | | |
| Zero-sequence voltage switch | yes | | | yes | | |
| $I^2t$ value | 265 $A^2s$ | | | 265 $A^2s$ | | |
| Semiconductor fuse | FF | | | FF | | |
| Maximum motor power | 0.75 W | | | 1.1 kW | | |
| Protection circuit of output | RCV-circuit | | | RCV-circuit | | |
| | | | | | | |
| Maximum pickup delay | 10 ms | | | 10 ms | | |
| Maximum dropout delay | 10 ms | | | 10 ms | | |
| Maximum switching frequency, resistive | 10 Hz | | | 10 Hz | | |
| Maximum switching frequency, inductive | 5 Hz | | | 2 kHz | | |
| Isolation voltage between input/output | 4 $kV_{eff}$ | | | 4 $kV_{eff}$ | | |
| Ambient temperature | 0 °C...+50 °C | | | 0 °C...+50 °C | | |
| Storage temperature | –25 °C...+55 °C | | | –25 °C...+55 °C | | |
| Type of protection/mounting rail | IP 20 / TS 35 | | | IP 20 / TS 35 | | |
| Wire range | 20 – 12 AWG | | | 22 – 12 AWG | | |
| finely stranded | 0.5 $mm^2$ – 2.5 $mm^2$ | | | 0.5 $mm^2$ – 2.5 $mm^2$ | | |
| single core | 0.5 $mm^2$ – 4 $mm^2$ | | | 0.5 $mm^2$ – 4 $mm^2$ | | |
| Location of mounting rail | horizontal | | | horizontal | | |
| | | | | | | |
| Norms/specifications | VDE 0160 | | | VDE 0160 | | |
| Emitted interference | EN 61000 | | | EN 61000 | | |
| Interference immunity | EN 61000 | | | EN 61000 | | |
| | | | | | | |

# Function module
## DC motor contactor

cemos

**Short closing/opening times**
**Wear resistant equipment**
**Electrical isolation**

Dimensions (mm): W x H x D
60.8 x 80 x 63

### 24V DC / 3A
### DC motor reversing contactor

Approvals:

| Description | Type | Part no. | Std. pack | |
|---|---|---|---|---|
| Electronic three phase contactor | | | | |
| Electronic reversing contactor | | | | |
| DC motor contactor | | 99.801.3900.9 | | 1 |
| | | | | |
| **Wiring diagrams, derating curve, limit curve** | **See pages 544-545** | | | |
| | | | | |
| **Input** | | | | |
| Operating voltage | 24 V DC | | | |
| Voltage range for "ON" | 15...28 V DC | | | |
| Voltage range for "OFF" | 0...5 V DC | | | |
| Nominal current for "ON" | ca. 10 mA | | | |
| Closed circuit current consumption | ca. 25 mA | | | |
| Pick up delay | ca. 1 ms | | | |
| Protection circuit of input | Polarised diode | | | |
| Status display: Start/Stop –H1 and direction –H3 | Green LED | | | |
| | | | | |
| **Output** | | | | |
| Nominal switching voltage | 24 V DC | | | |
| Maximum switching voltage | 28 V DC | | | **Important note:** |
| Minimum switching voltage | 20 V DC | | | In the case of motors that are controlled by solid-state |
| Maximum switching current | 3A DC (Derating) | | | relays, an additional mechanical contact must be |
| Minimum switching current | 10 mA | | | connected in series for safety separation. |
| Motor voltage UA1 | Terminal 6 | | | This mechanical contact can influence several motors. |
| Motor voltage UA2 | Terminal 5 | | | The protection of the solid state component must be |
| Motor peak current | 6 A (200 ms) | | | guaranteed by a rapid reacting fuse. |
| Typical $R_{DS}$ ON | 0,6 Ω | | | |
| Fault indicator: excess temperature and overcurrent –H2 | Red LED | | | |
| | | | | |
| Maximum pickup delay | 5 ms | | | |
| Maximum dropout delay | 5 ms | | | |
| Isolation voltage between input/output | 4 $kV_{eff}$ | | | |
| Ambient temperature | –25 °C...+50 °C | | | |
| Storage temperature | –25 °C...+55 °C | | | |
| Mounting rail | TS 35 and TS 32 | | | |
| | | | | |
| Wire range, finely stranded/single core | 0.5 $mm^2$ – 2.5 $mm^2$ / 0.5 $mm^2$ – 4 $mm^2$ / 22 – 12 AWG | | | |
| Wire range (load), finely stranded/single core | 0.5 $mm^2$ – 4 $mm^2$ / 0.5 $mm^2$ – 6 $mm^2$ / 22 – 10 AWG | | | |
| Location of mounting rail | horizontal | | | |
| | | | | |
| Norms/specifications | VDE 0160 | | | |
| Emitted interference | EN 61000-6-3 | | | |
| Interference immunity | EN 61000-2 | | | |



Subject to change without further notice

# Thermistor overload relay

TMS

- **with detection of wire breakage**
- **for onerous start up**
- **for high duty rating**
- **for high ambient temperature**
- **for locked rotors**
- **for phase failure**

**Thermistor overload relay with reset**

Dimensions (mm): w x H x D
48 x 96 x 60

| **Description** | Type | Part no. | Std. pack |
|---|---|---|---|
| | TMS-101-250V5A | 87.110.6253.0 | 1 |
| **Wiring diagram, dimensions** | **See pages 546** | | |
| **Input data** | | | |
| Nominal voltage | 230 V AC +6% / –10%, 50–60 Hz | | |
| Power consumption | ca. 2 VA | | |
| Disconnection resistance RA | 3 kΩ ≤ $R_A$ ≤ 4 kΩ | | |
| Reset resistance RE | 1.75 kΩ ±10% | | |
| Maximum number of detectors | 6 pieces | | |
| External reset button | 1 make contact | | |
| Status display | Red LED | | |
| **Output data** | | | |
| Maximum switching voltage | 250 V AC/DC | | |
| Maximum switching current | 5 A AC/DC | | |
| Maximum total current (2 simultaneous contacts) | 7.5 A AC/DC | | |
| Switching capacity (resistive load) | | | |
| at 24 V DC, maximum | 120 W | | |
| at 250 V AC, maximum | 1250 VA | | |
| Contact arrangements | 2 Changeover contacts (SPDT) | | |
| General data | | | |
| Ambient temperature | 0 °C...+40 °C | | |
| Storage temperature | –25 °C...+55 °C | | |
| Transport temperature | –25 °C...+70 °C | | |
| Wire range | 22 – 12 AWG | | |
| finely stranded | 0.14 – 2.5 $mm^2$ | | |
| single core | 0.14 – 4 $mm^2$ | | |
| Installation on mounting rail | TS 35 or TS 32 | | |

Connection example + function of TMS 101

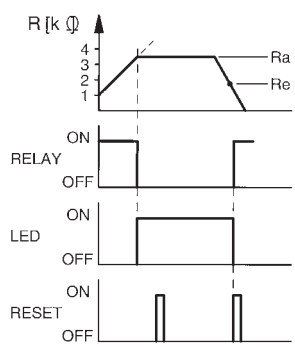


**Important note for user:**
The relay outputs must be supplied by the same phase (e.g. L1)

electronics

# Function modules
# Lamp test module/fuse module

## LPB/SBS

**Lamp test module**
Checking LED displays
Avoiding undetected faults
Preventing incorrect diagnosis

**Fuse module**
4 miniature fuses for control circuits
with operation indicator
For restricted spaces

| | **Lamp test module** | | | **Fuse module** | | |
|---|---|---|---|---|---|---|
| | Approvals: | | | Approvals: | | |
| Dimensions (mm): W x H x D | 48 x 96 x 92 | | | 48 x 96 x 92 | | |
| **Description** | Type | Part no. | Std. pack | Type | Part no. | Std. pack |
| | LPB-14L-250V1A | 87.040.3053.0 | 1 | SBS-4SI-24V6,3A | 87.010.7653.0 | 2 |
| | | | | SBS-4SI-230V6,3A | 87.010.7453.0 | 2 |
| **Wiring diagram, dimensions** | **See pages 547** | | | **See pages 547** | | |
| **Technical data** | | | | | | |
| Maximum nominal voltage | 250 V | | | 250 V | | |
| Diode type | 1N4007 | | | | | |
| Maximum diode current | 1 A | | | | | |
| Diode reverse voltage | 1000 V | | | | | |
| Typical voltage in forward direction per diode | 0.7 V | | | | | |
| Lamp test at terminal | P | | | | | |
| Lamp connection at terminal | L | | | | | |
| Switching operation at terminal | B | | | | | |
| Number of test lamps (can be bridge via P-P) | 2 x 7 | | | | | |
| | | | | **87.010.7653.0** | **87.010.7453.0** | |
| Nominal voltage | | | | 12–24 V AC/DC | 115–230 V AC/DC +6%/-10% | |
| Maximum nominal current per fuse | | | | 6.3 A | 6.3 A | |
| Maximum total current over 4 fuses | | | | 18 A | 18 A | |
| Maximum fuse capacity | | | | 1.6 W* | 1.6 W* | |
| Maximum fuse capacity over 4 fuses | | | | 4.8 W | 4.8 W | |
| Maximum current for disrupted fuse | | | | 15 mA | 0.5 A | |
| Number of fuse holders | | | | 4 | 4 | |
| Dimensions of fuse holders | | | | 5 x 20 mm | 5 x 20 mm | |
| Touching voltage of fuse holders | | | | IEC 257, DIN 0820 | IEC 257, DIN 0820 | |
| Status display | | | | LED 24V (red) | Neon lamp 110 V | |
| | | | | *Note derating! | | |
| | | | | **Fuses not included** | | |
| General data | | | | | | |
| Ambient temperature | –25 °C...+50 °C | | | –25 °C...+50 °C | | |
| Storage temperature | –40 °C...+55 °C | | | –40 °C...+55 °C | | |
| Wire range | 22 – 12 AWG | | | 22 – 12 AWG | | |
| finely stranded | 0.14 – 2.5 $mm^2$ | | | 0.14 – 2.5 $mm^2$ | | |
| single core | 0.14 – 4 $mm^2$ | | | 0.14 – 4 $mm^2$ | | |
| Installation on mounting rail | TS 35 or TS 32 | | | TS 35 or TS 32 | | |



Subject to change without further notice

# Centralised fault indication

SSM

For monitoring control systems
Possible to locate and eliminate faults rapidly

Dimensions (mm): W x H x D

| Description | Type | Part no. | Std. pack | Type | Part no. | Std. pack |
|---|---|---|---|---|---|---|
| | **Centralised fault indication relay**<br>Approvals:<br>48 x 96 x 60 | | | **Expansion module for centralised fault indication relay**<br>Approvals:<br>27 x 96 x 60 | | |
| | SSM-7E230V-250V5A | 87.030.1053.0 | 1 | SSM-7E230V | 87.010.2053.0 | 1 |
| **Wiring diagrams, dimensions** | **See pages 548** | | | **See pages 548** | | |
| **Input data** | | | | | | |
| Nominal voltage | 230 V AC +6%/-10%, 50–60 Hz | | | | | |
| Input current | approx. 1 mA | | | approx. 1 mA | | |
| Power consumption | approx. 1 VA | | | | | |
| Fault inputs | terminals, 230 V AC +6%/– 10% | | | terminals (Kl. 1...7), 230 V AC +6%/–10% | | |
| Series-connected inputs | terminals | | | terminals | | |
| **Output data** | | | | | | |
| Maximum switching voltage | 250 V AC/DC | | | | | |
| Maximum switching current | 5 A AC/DC | | | | | |
| Switching capacity (resistive load) | | | | | | |
| at 24V DC, maximum | 120 W | | | | | |
| at 230V AC, maximum | 1250 VA | | | | | |
| Contact arrangement | 1 Changeover (SPDT) | | | | | |
| **General data** | | | | | | |
| Ambient temperature | –25 °C...+50 °C | | | –25 °C...+50 °C | | |
| Storage temperature | –40 °C...+85 °C | | | –40 °C...+85 °C | | |
| Wire range | 22 – 12 AWG | | | 22 – 12 AWG | | |
| finely stranded | 0.14 – 2.5 $mm^2$ | | | 0.14 – 2.5 $mm^2$ | | |
| single core | 0.14 – 4 $mm^2$ | | | 0.14 – 4 $mm^2$ | | |
| Installation on mounting rail | TS 35 or TS 32 | | | TS 35 or TS 32 | | |
| **Note** | | | | **Expansion module for 87.030.1053.0:** | | |
| Terminals N and $B_2$ must be bridge prior to commissioning | | | | Up to 91 further fault inputs can be connected to the basic module | | |
| Impulses <100ms are not detected | | | | | | |

electronics

# Function modules
# Monitoring modules
# DNU/DSU

**Three-phase system monitoring**
For voltage monitoring of three-phase systems with neutral conductors. The module will operate at 85% of the mains voltage.

**Three-phase fuse monitoring**
Specifically for monitoring the supply leads of three-phase inductive motors (400 V/250 V~, 50 – 60 Hz)

| | **Three-phase system monitoring** | | | **Three-phase fuse monitoring** | | |
|---|---|---|---|---|---|---|
| | Approvals: | | | Approvals: | | |
| Dimensions (mm): W x H x D | 48 x 96 x 60 | | | 48 x 96 x 60 | | |
| **Description** | Type | Part no. | Std. pack | Type | Part no. | Std. pack |
| with mounting foot for T S35 (for distribution board) | DNU-H-400V-250V4A | 86.030.6353.0 | 1 | DSU-400V-250V4A | 87.030.6453.0 | 1 |
| with mounting foot TS 35 + TS 32 | DNU-U-400V-250V4A | 87.030.6353.0 | 1 | | | |
| | | | | | | |
| | | | | | | |
| | | | | | | |
| **Wiring diagram, dimensions** | **See pages 549** | | | **See pages 550** | | |
| | | | | | | |
| **Input data** | | | | | | |
| Nominal voltage | 230/400 V AC +6%/–10%, 50–60 Hz | | | 230 V AC +6%/–10%, 50–60Hz | | |
| Power consumption | ca. 4 VA | | | ca. 4 VA | | |
| System monitoring | – | | | 3 x 400 V AC | | |
| Operating value | 0.85 x $U_N$ | | | – | | |
| Pickup delay | approx. 500 ms | | | ca. 6 s | | |
| Dropout delay | ca. 500 ms | | | ca. 250 ms | | |
| Switching hysteresis | ca. 5% | | | – | | |
| Detection of mains failure | – | | | > 900 ms | | |
| Backup fuse | ca. 0.5A | | | – | | |
| Status display | LED | | | LED | | |
| | | | | | | |
| **Output data** | | | | | | |
| Maximum switching voltage | 250 V AC/DC | | | 250 V AC | | |
| Maximum switching current | 4 A AC/DC | | | 4 A | | |
| Switching capacity (resistive load) | | | | | | |
| at 24 V DC, maximum | 100 W | | | 100 W | | |
| at 230 V AC, maximum | 1100 VA | | | 1000 VA | | |
| Contact arrangements | 2 Changeover contacts (SPDT) | | | 1 Changeover contact (SPDT) | | |
| | | | | | | |
| **General data** | | | | | | |
| Ambient temperature | –10 °C...+50 °C | | | –10 °C...+50 °C | | |
| Storage temperature | –40 °C...+85 °C | | | –40 °C...+85 °C | | |
| Wire range | 22 – 12 AWG | | | 22 – 12 AWG | | |
| finely stranded | 0.5 – 2.5 $mm^2$ | | | 0.14 – 2.5 $mm^2$ | | |
| single core | 0.5 – 4 $mm^2$ | | | 0.14 – 4 $mm^2$ | | |
| Installation on mounting rail | 0.5 A | | | – | | |
| | | | | | | |
| | 86.030.6353.0 | 87.030.6353.0 | | | | |
| Installation on mounting rail | only on TS 35 | TS 35 or TS 32 | | TS 35 or TS 32 | | |



Subject to change without further notice

# Rotation indicator

DRA

For monitoring the phase sequence of three-phase inductive motors

Dimensions (mm): W x H x D
48 x 96 x 63

**Rotation indicator**
**3 x 400V / 50Hz**
Approvals:

| **Description** | Type | Part no. | Std. pack |
|---|---|---|---|
| | DRA-400V-250V3A | 81.010.1000.0 | 1 |
| | | | |
| | | | |
| | | | |
| | | | |
| **Wiring diagram** | **See pages 551** | | |
| | | | |
| **Input data** | | | |
| Nominal voltage | approx 3 x 400 V AC +6%/–10%, 50 Hz | | |
| Power consumption | ca. 2.5 VA | | |
| Dropout voltage | ≤ 3 x 100 V AC / 50 Hz | | |
| Pickup delay | < 25 ms | | |
| Dropout delay | < 30 ms | | |
| | | | |
| Switching logic of the relay | | | |
| Clockwise | Relay picked up | | |
| Anticlockwise | Relay dropped out | | |
| | | | |
| | | | |
| **Output data** | | | |
| Maximum switching voltage | 250 V AC | | |
| Maximum switching current | 3 A AC / DC | | |
| Switching capacity (resistive load) | | | |
| at 24 V DC, maximum | 70 W | | |
| at 250 V AC, maximum | 750 VA | | |
| Contact arrangement | 2 Changeover contacts (SPDT) | | |
| | | | |
| **General data** | | | |
| Pickup delay | < 25 ms | | |
| Dropout delay | < 30 ms | | |
| Contact material | AgNi | | |
| Endurance | | | |
| Mechanical | 2 x $10^7$ switching operations | | |
| Electrical | 1 x $10^5$ switching operations at full load | | |
| Test voltage of input/output | 2 $kV_{eff}$ | | |
| | | | |
| Ambient temperature | 0 °C...+40 °C | | |
| Storage temperature | –40 °C...+85 °C | | |
| Wire range | 22 – 12 AWG | | |
| finely stranded | 0.5 – 2.5 $mm^2$ | | |
| single core | 0.5 – 4 $mm^2$ | | |
| | | | |
| Installation on mounting rail | TS 35 or TS 32 | | |

cemos

**Electronic contactors**

## Wiring diagrams and Derating curves

### Electronic three phase contactor

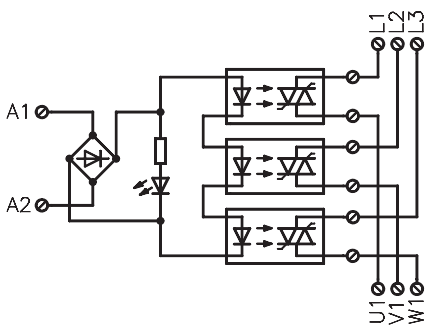


### Electronic reversing contactor

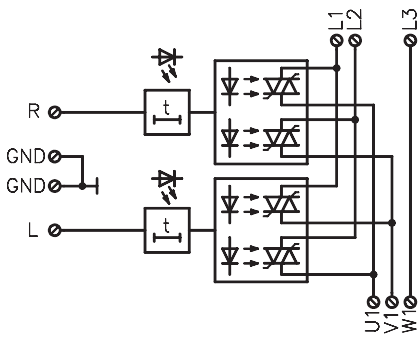


### DC motor-reversing contactor

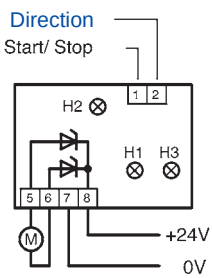


Derating of three phase contactor

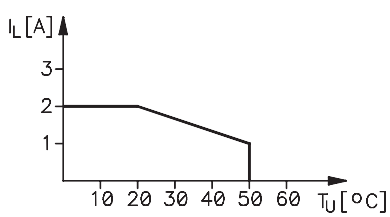


Reversing contactor in static mode

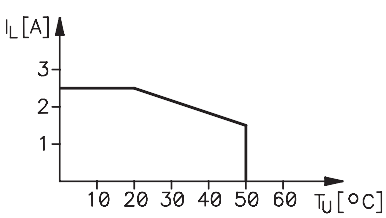


Derating curve:

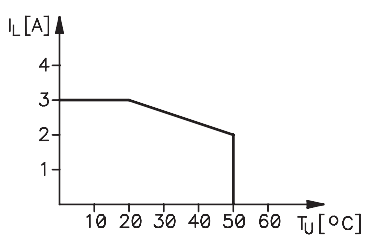


Reversing contactor in dynamic mode

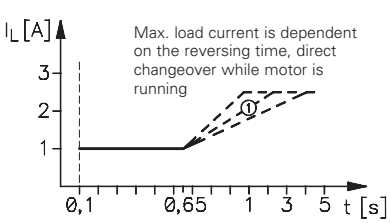


① Curve dependent on motor torque

Timing diagram for DC motor-reversing contactor

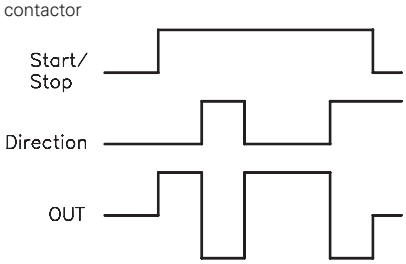




Subject to change without further notice

# Dimensions

## Electronic three phase contactor and Electronic reversing contactor

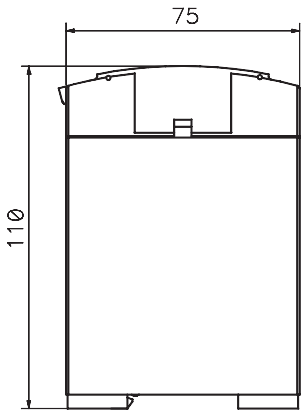


## DC motor-reversing contactor

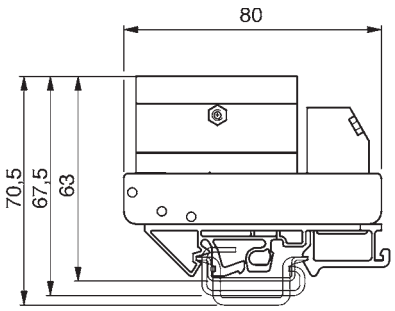

# Function modules

TMS

**Thermistor overload relay TMS 101**

## Wiring diagram

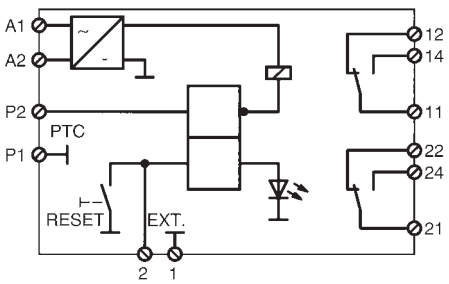


## Dimensions

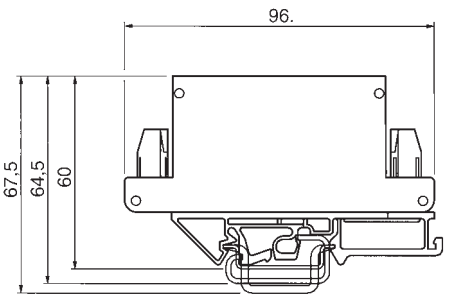




Subject to change without further notice

# LPB/SBS

**Lamp test module + Fuse module**

## Wiring diagram

### Lamp test module

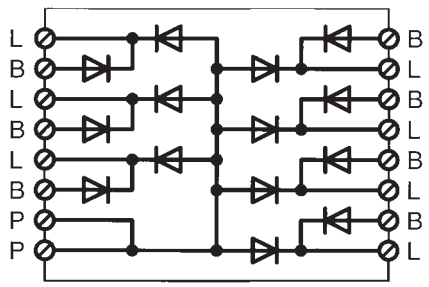


### Fuse module

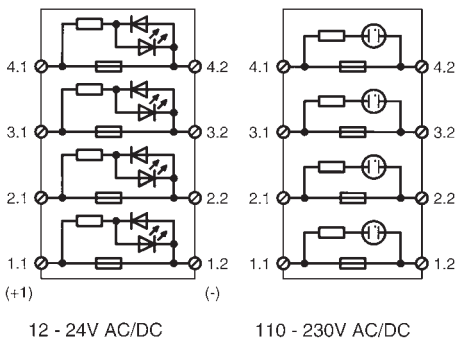


## Dimensions

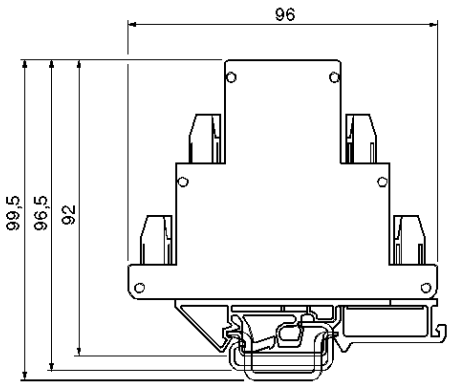


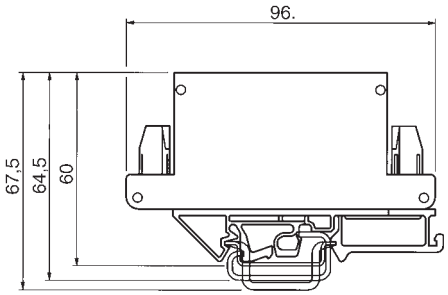


electronics

# Function modules

## SSM

**Centralized fault indication and expansion module**

## Wiring diagram

### Centralized fault indication

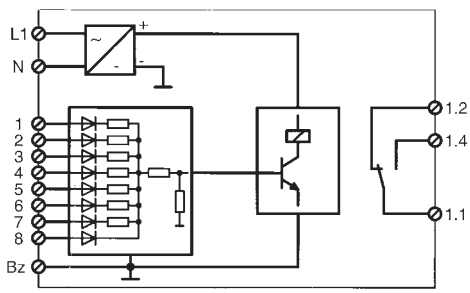


### Expansion module to basic module

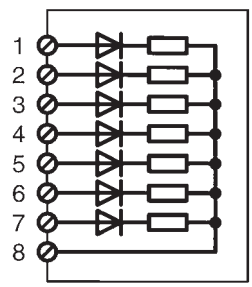


## Dimensions

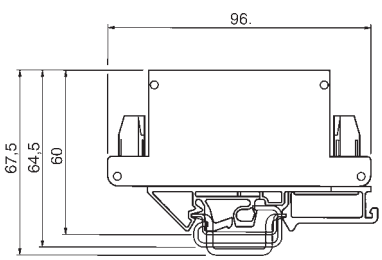


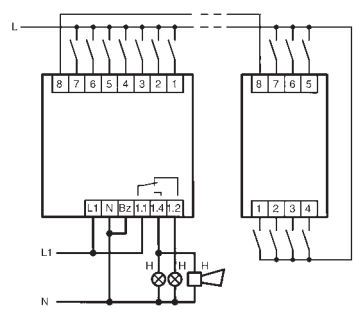




Subject to change without further notice

# DNU

**Three-phase system monitoring**

## Wiring diagram

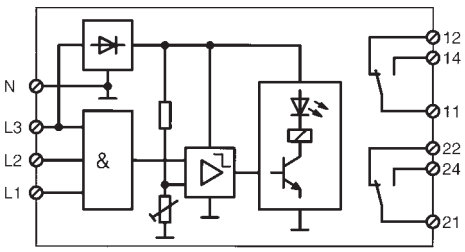


## Dimensions

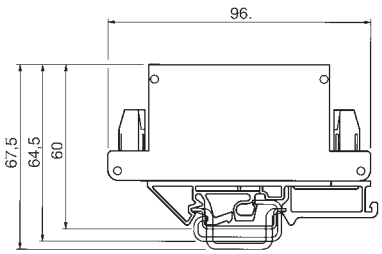


With TS35 mounting foot, the depth is 49,5 mm (including rail)

## Connection example:

**Centralized fault indication with expansion module**

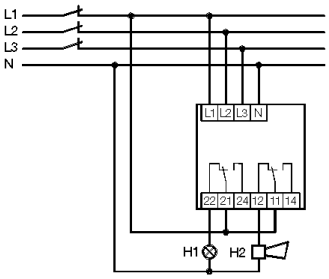


electronics

# Function modules

# DSU

**Three-phase fuse monitoring**

## Wiring diagram

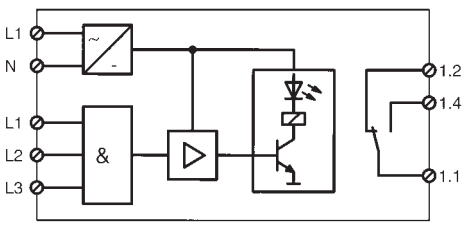


## Dimensions

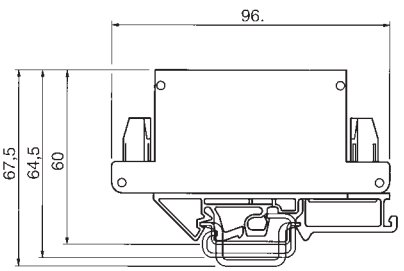


## Connection example

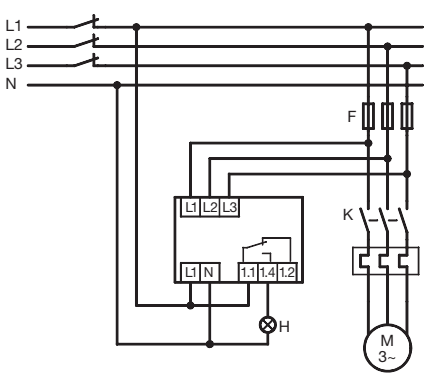




Subject to change without further notice

# DRA

**Rotation indicator**

## Wiring diagram

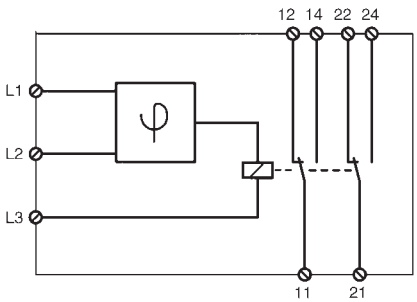


## Dimensions

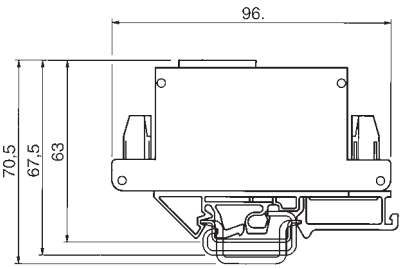


electronics

# Function modules
## Interface converter

SSW

### Principles of serial interfaces

The increasing use of a variety of automation techniques in all areas of industry requires the processing of an increasing amount of information. The most important transmission media is serial data cables which are used to control complex processes and record process data. Further transmission media are optical fibres and infrared transmission.

A wide variety of serial interfaces are used which are not compatible with each other and frequently do not fulfil the increasing demands as regards to interference immunity, range and speed.

The Wieland SSW product range has tackled this problem and guarantees a noise-free and high-capacity data transmission in hostile industrial conditions.

### RS 232 (V.24) interface

One of the most widely used serial interfaces is defined in the American norm EIA-232 and in the international standard CCITT V.24.

The data interface realises data exchange between two data processing devices (point-to-point connection) up to a maximum of 15 m in full duplex mode.

In the simplest configuration, three conductors TxD (sending data), RxD (receiving data) and GND (common signal ground) are required for this connection. The data transmission is controlled by the so-called XON/XOFF protocol (software handshake). If the transmission co-ordination should be controlled via hardware handshake, further control, signal and timing cables are available.

### TTY current loop interface

The TTY current loop interface is a very well-known remote transmission interface which has its origins in telegraphy. They can be found nowadays in programmable controllers (PLC), visual display units and printers. A pair of conductors are required for both the sending and receiving of data.

The data transmission is carried out via software handshake in full duplex mode.

A loop current of 20 mA represents the state of logical "1". If the circuit is interrupted, this is evaluated as logical "0". A current-driven source is required in each loop which must either be coupled on the sending or receiving side.

### RS-422(V.11) interface

Data communication with intelligent machines requires particularly rapid and high-capacity communication interfaces.

The RS 422 standard fulfils these requirements. It carries out the serial transmission of data in full duplex mode between two devices at a transmission rate up to 10 Mbit/s and a maximum distance of 1000 m.

The interface is operated at minimum with a "Sending" data channel (TxD) and a "Receiving" data channel (RXD). The sending and receiving co-ordination is implemented via software handshake.

The high rate of transmission reliability is achieved by the evaluation of the differential voltage between a twisted core pair. Interference voltages towards the zero potential are not evaluated. The electrical levels of the data cables are defined as

❒ –0,3 V to –6 V for logical "1" and

❒ +0,3 V to +6 V for logical "0".

### RS-485(2 wire) interface

This serial interface type offers the possibility of multipoint connections of up to 32 devices as well as performance.

The electrical levels and their logical assignment are identical to the RS 422 standard

Limited by the 2-wire technology, the data transmission can however only take place according to half duplex mode i.e. the sending and receiving of data takes place alternately and must be controlled via an appropriate software program. In contrast to pure point-to-point communication, it must be possible to address and identify all the devices of a multipoint connection via an address using a corresponding software protocol. Only one device may send at the same time. All the other devices are meanwhile in listening mode.

The 2-wire bus cable can be up to 500 m long and must be terminated at both ends with an EOL resistor (100-200 ohm). The individual devices can be sent via spur lines up to 5 m from the bus cable.

The maximum transmission rate is 10 Mbit/s when using data cable that is twisted and shielded in pairs.

### SSW-V.24 // TTY

The V.24 // interface converters are used to convert an RS 232 interface into a 20 mA current loop interface TTY or vice versa (e.g. between a PC and a PLC).

Due to the low capacity of RS 232 interfaces (15 m), the converters are installed as closely as possible to these interfaces. It is possible to bridge up to 1000 m via a cable that is twisted and shielded in pairs with the insulated and noise-free TTY signal.

### SSW-V.24 // RS 422

The V.24 // RS-422-interface converters are used to convert an RS 232 interface into an RS 422 interface or vice versa. With the high-capacity and noise-free RS 422 interface, it is possible to bridge distances up to 1000 m using a cable that is twisted and shielded in pairs.

### SSW-V.24 // RS 485

The RS-485-standard is used when more than two devices should communicate with each other. By converting the point-to-point RS 232 interface into the RS 485 standard with bus capability, up to 32 devices can be interconnected via a 2-wire cable.

The V.24 // RS-485-interface converters are used to convert an RS 232 interface into an RS 485 2-wire bus interface with multipoint capability or vice versa.

The interface converters operate independently of the protocol and code i.e. all the bus devices must support the same transmission protocol and the same speed.

Subject to change without further notice

# SSW

Suitable for use in switchgear cabinets and directly on the PC

**Interface converter**
**RS 232 SSW-V.24//TTY**

**Interface converter**
**RS 232 SSW-V.24//RS 422**

Dimensions (mm): W x H x D
20 x 76 x 68

| | Type | Part no. | Std. pack | Type | Part no. | Std. pack |
|---|---|---|---|---|---|---|
| | SSW-V.24//TTY | 57.007.0053.0 | 1 | SSW-V.24//RS422 | 57.007.0153.0 | 1 |
| **Wiring diagram, dimensions** | **See pages 555** | | | **See pages 555** | | |
| **Technical data** | | | | | | |
| Supply voltage – potential assigned to the input side | 5 V DC ±5% (Pin 18) | | | 5 V DC ±5% (Pin 18) | | |
| Maximum power consumption | 130 mA | | | 130 mA | | |
| Input signal | V 24-level (RS 232) | | | V 24 level (RS 232) | | |
| Output signal | TTY level (20-mA current loop) | | | RS422 level | | |
| Maximum transmission rate | 20 k Baud | | | 20 k Baud | | |
| Maximum transmission length | 1000 m (maximum 500 Ω) | | | 1000 m (maximum 500 Ω) | | |
| Isolation voltage | 500 V DC | | | 500 V DC | | |
| Ambient temperature | 0 °C...50 °C | | | 0 °C...50 °C | | |
| Storage temperature | –25 °C...+85 °C | | | –25 °C...+85 °C | | |
| Connection of input signal (plug) | 25 pole D-SUB plug | | | 25 pole D-SUB plug | | |
| Connection of output signal (socket) | 25 pole D-SUB socket | | | 25 pole D-SUB socket | | |
| Operating possibility | | | | Fully active, semi active, passive | | |
| Direction of control | | | | | | |
| RS 232 Send V.24 → RS485 | | | | | | |
| RS 232 Receive V.24 ← RS485 | | | | | | |
| Installation on mounting rail | TS 35 | | | TS 35 | | |

# Function modules
## Interface converter

SSW

Suitable for use in switchgear cabinets and directly on the PC

**Interface converter**
**RS 232 SSW-V.24//RS 485**

Dimensions (mm): W x H x D
20 x 76 x 68

| | Type | Part no. | Std. pack |
|---|---|---|---|
| | SSW-V.24//RS485 | 57.007.0253.0 | 1 |
| **Wiring diagram, dimensions** | **See pages 555** | | |
| **Technical data** | | | |
| Supply voltage - potential assigned to the input side | 5 V DC ±5% (Pin 18) | | |
| Maximum power consumption | 130 mA | | |
| Input signal | V 24 level (RS 232) | | |
| Output signal | RS485 level | | |
| Maximum transmission rate | 20 k Baud | | |
| Maximum transmission length | 1000 m (maximal 500 Ω) | | |
| Isolation voltage | 500 V DC | | |
| Ambient temperature | 0 °C...50 °C | | |
| Storage temperature | –25 °C...+85 °C | | |
| Connection of input signal (plug) | 25 pole D-SUB plug | | |
| Connection of output signal (socket) | 25 pole D-SUB socket | | |
| Operating possibility | Fully active, semi active, passive | | |
| Direction of control | | | |
| Send PIN 20 | –3 V...–12 V | | |
| Receive PIN 20 | +3 V...+12 V | | |
| Installation on mounting rail | TS 35 | | |



Subject to change without further notice

# SSW

## SSW-V.24//TTY

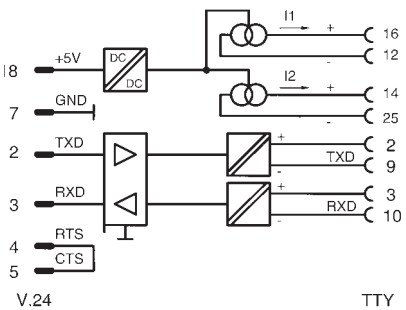


## SSW-V.24//RS422

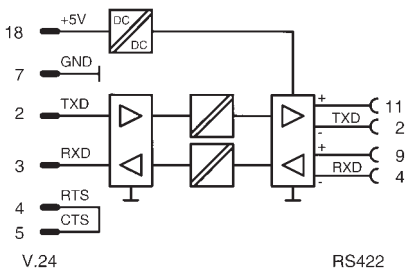


## SSW-V.24//RS485

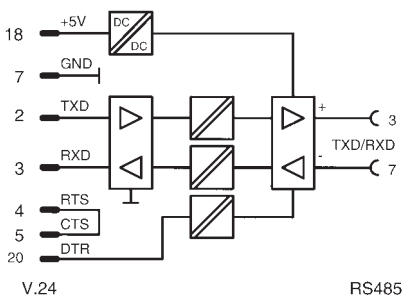


## Dimensions

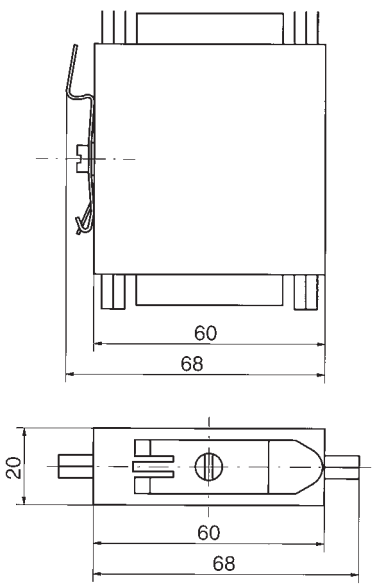


## Connection examples

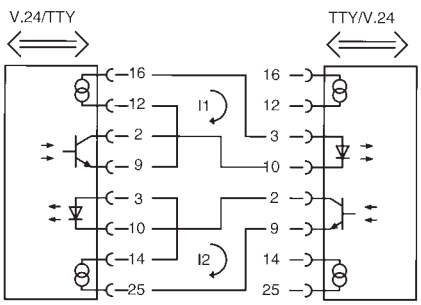


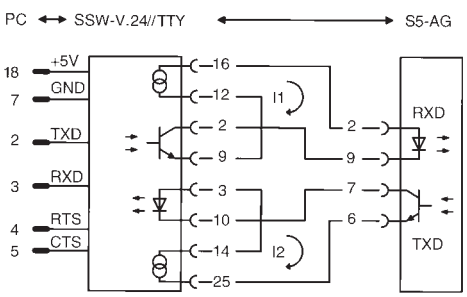


electronics

# interface

**D-Sub to screw terminal**
**IDC header to screw terminal**
**Interface modules and I/O plug systems for Siemens S5**

***interface*** offers

- Rapid wiring
- Rapid commissioning
- Clear cabling
- Reduction of wiring errors
- High packing density
- Time and cost savings

CE In general all Wieland components which are obliged to have the CE identification are provided with the CE mark

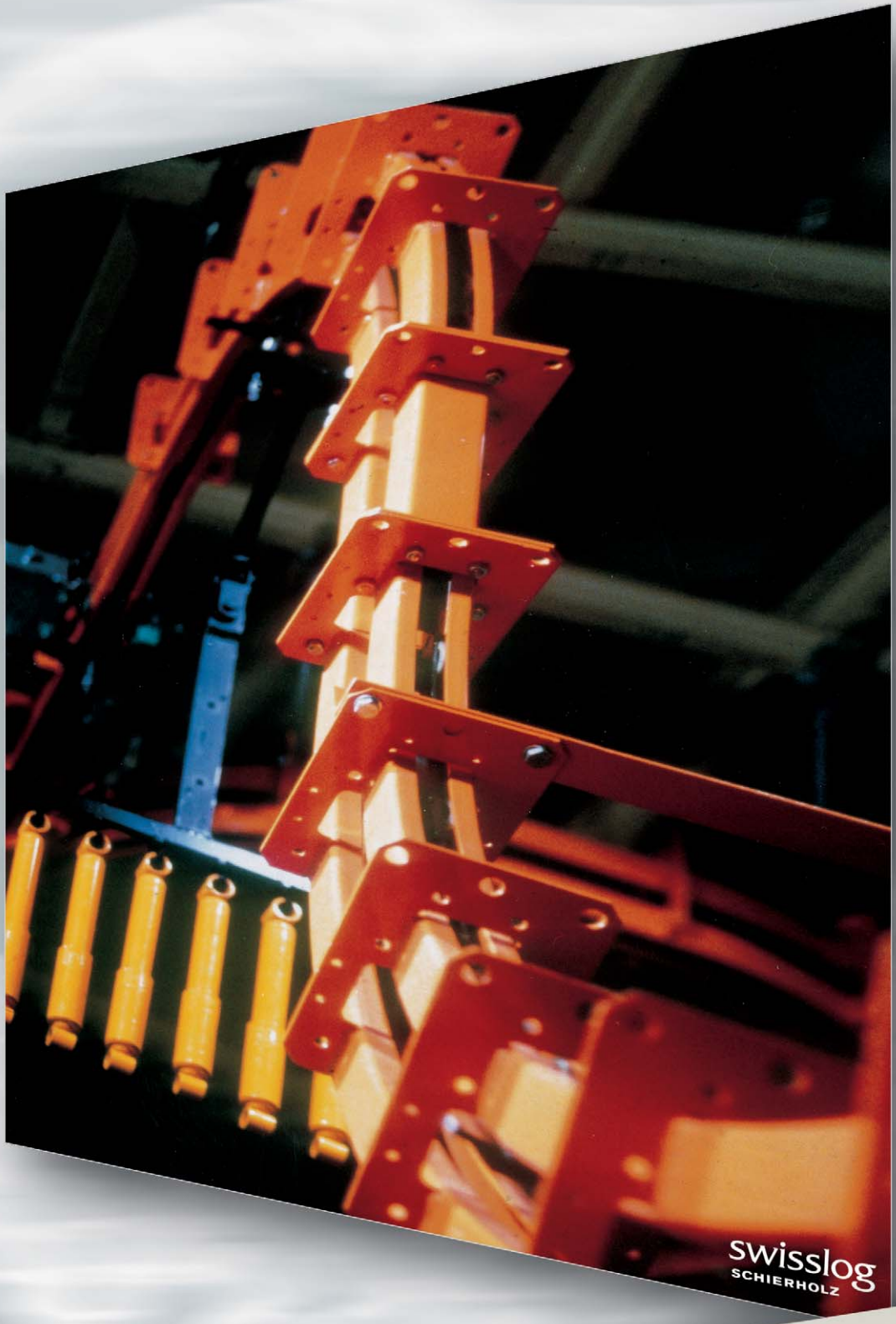


electronics

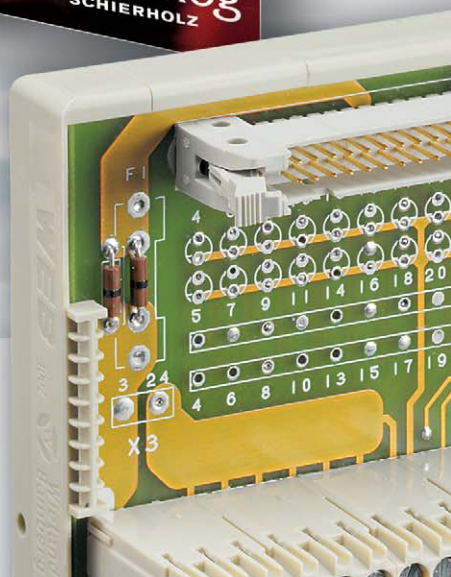

# Electronic components

## Interface systems

# passive interfaces

### Interface modules

Interface modules make the connection between electronic and electrical components within the control panel.

The control signals from prefabricated plug connections are converted into terminal connections.

The use of Wieland interface modules provides the following benefits for system wiring:

- ❒ Simple process which saves time during design and costing
- ❒ Rapid wiring, commissioning and fault elimination due to clear cabling and pole designations
- ❒ Reduction of wiring errors
- ❒ Compact due to high packing density

The interface modules are fitted as standard with a mounting foot for DIN / EN mounting rails TS 35 or TS 32.

### Available interface modules:

### Subminiature D-SUB connector in accordance with DIN 41652

Subminiature connectors are increasingly used in telecommunications engineering, text and data processing as well as in measuring and control engineering.

The typical trapezoidal metal protective shrouds (galvanised and yellow passivated steel) that are used for this range of connectors guarantee that poles are connected correctly.

The metal shroud is fed onto a terminal to ensure a reliable looping through of the earth.

### IDC header in accordance with DIN 41651

The flat ribbon connectors are used more frequently at the interface between the electronics and conventional electrical components.

The use of locking brackets in various lengths stops the socket connector from being separated from the plug connector due to vibration.

Central polarisation prevents any incorrect connections.

### Interface modules for S5

These interface modules have been specially designed for the Siemens range of programmable controllers SIMATIC" S5-115U to 155U. The interface modules take the place of the current I/O connection technology (screw or crimp connection) by implementing the transition from the I/O card to a multipole ribbon connector in accordance with DIN 41651.

Special interface modules are used to connect the sensors and actuators directly to the I/O plug system. An optimum adaptation to the respective PLC module is thereby achieved.

Universal modules for a variety of applications complete this system range.

### Overview of interface modules for SIMATIC®

### S5-115U

- ❒ Digital input/output module for 32 channels
- ❒ Input/output plug system, 46 pole front plug
- ❒ Universal module for digital and analogue modules with 46 pole front plug connection

### S5-135U to 155U

- ❒ Digital input/output module for 32 channels
- ❒ Input/output plug system, 42 pole front plug
- ❒ Universal module for digital and analogue modules with 42 pole front plug connection
- ❒ Relay output modules with master and expansion modules
- ❒ Initiator module for three-conductor initiators

Flat round cable with/without shielding, 50 pole, prefabricated in various lengths for connecting the front plug to the interface modules.

**Further customer-specific interface modules are available on request.**

# Interface System
# D-Sub to screw terminal

## passive interfaces

### D-SUB connector to screw terminal

Approvals: UL in preparation
Overall width x 80 x 61

| **Number of poles** | Overall width (mm) | Type | Part No.. | Box Qty |
|---|---|---|---|---|
| D-Sub-female | | | | |
| 9 | 38,7 | female D-Sub9 | 87.200.2200.3 | 1 |
| 15 | 48,2 | female D-Sub15 | 87.200.2201.3 | 1 |
| 25 | 74,0 | female D-Sub25 | 87.200.2202.3 | 1 |
| 37 | 106,0 | female D-Sub37 | 87.200.2203.3 | 1 |
| 50* | 141,0 | female D-Sub50 | 87.200.2204.3 | 1 |
| | | | | |
| D-Sub-male | | | | |
| 9 | 38,7 | male D-Sub9 | 87.200.2205.3 | 1 |
| 15 | 48,2 | male D-Sub15 | 87.200.2206.3 | 1 |
| 25 | 74,0 | male D-Sub25 | 87.200.2207.3 | 1 |
| 37 | 106,0 | male D-Sub37 | 87.200.2208.3 | 1 |
| 50* | 141,0 | male D-Sub50 | 87.200.2209.3 | 1 |
| | | | | |
| * contacts arranged in 3 groups | | | | |
| | | | | |
| **Wiring diagrams, dimensions** | | **See page 570** | | |
| | | | | |
| **Technical data** | | | | |
| Maximum nominal voltage | | 60 V AC / 75 V DC | | |
| Maximum nominal current | | 1,5 A | | |
| | | | | |
| Wire range | | 22 – 12 AWG | | |
| finely stranded | | 0,5 – 2,5 mm² | | |
| single core | | 0,5 – 4 mm² | | |
| | | | | |
| Ambient temperature | | 0...+50 °C | | |
| Installation of mounting rail | | TS 35 or TS 32 | | |
| | | | | |
| Norms/specifications | | VDE 0110b Gr. 2 | | |
| | | | | |
| Terminal strip X2 | | Type 8191E (x poles) | | |



Subject to change without further notice

# IDC header to screw terminal

# passive interfaces

**IDC connector to screw terminal**
Approvals: UL in preparation
Overall width x 80 x 61

| **Number of poles** | Overall width (mm) | Type | Part No.. | Box Qty |
|---|---|---|---|---|
| 10 | 48,2 | FLK-SR10 | 87.210.2201.3 | 1 |
| 14 | 48,2 | FLK-SR14 | 87.210.2202.3 | 1 |
| 16 | 61,1 | FLK-SR16 | 87.210.2203.3 | 1 |
| 20 | 61,1 | FLK-SR20 | 87.210.2204.3 | 1 |
| 26 | 70,8 | FLK-SR26 | 87.210.2205.3 | 1 |
| 34 | 93,1 | FLK-SR34 | 87.210.2207.3 | 1 |
| 40 | 109,0 | FLK-SR40 | 87.210.2208.3 | 1 |
| 50 | 131,7 | FLK-SR50 | 87.210.2210.3 | 1 |
| 60 | 160,5 | FLK-SR60 | 87.210.2211.3 | 1 |
| 64 | 173,8 | FLK-SR64 | 87.210.2212.3 | 1 |

| | |
|---|---|
| **Wiring diagrams, dimensions** | **See page 570** |
| **Technical data** | |
| Maximum nominal voltage | 60 V AC / 75 V DC |
| Maximum nominal current | 1,0 A |
| Wire range | 22 – 12 AWG |
| finely stranded | 0,5 – 2,5 mm$^2$ |
| single core | 0,5 – 4 mm$^2$ |
| Ambient temperature | 0...+50 °C |
| Installation of mounting rail | TS 35 or TS 32 |
| Norms/specifications | VDE 0110b Gr. 2 |
| Terminal strip X2 | Type 8191E(x poles) |

# passive interfaces

## for S5-115U

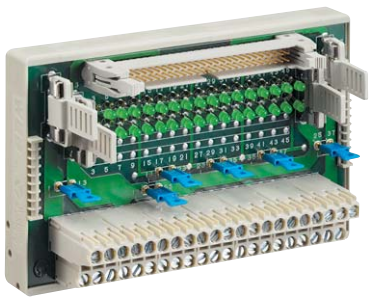

### Digital I/O

Dimensions (mm): W x H x D
128.5 x 80 x 61

Approvals:

| Description | Type | Part No. | Box Qty |
|---|---|---|---|
| Digital I/O with LED | EAS-UE/D-L-115 | 87.221.6053.0 | 1 |
| Digital I/O without LED | EAS-UE/D-115 | 87.221.5953.0 | 1 |
| | | | |
| | | | |
| | | | |
| **Wiring diagrams, dimensions** | **See page 571** | | |
| | | | |
| **Technical data** | | | |
| Nominal voltage with LED | 24 V DC | | |
| Nominal voltage without LED | 75 V DC / 60 V AC | | |
| Nominal current per LED | 5 mA | | |
| Nominal current: | | | |
| connections 1, 13, 25, 37 maximum | 4 x 2.5 A oder 1 x 10 A | | |
| all remaining connections, maximum | 0.5 A | | |
| | | | |
| Ambient temperature | 0...+60 °C | | |
| Storage temperature | –40...+70 °C | | |
| Wire range (X8) | 22 – 12 AWG | | |
| finely stranded | 0.5 – 2.5 $mm^2$ | | |
| single core | 0.5 – 4 $mm^2$ | | |
| | | | |
| Installation of mounting rail | TS 35 or TS 32 | | |
| | | | |
| Terminal strip X8 | Type 8191E | | |
| | | | |
| **Accessories** | | | |
| Suitable 46 pole front plug (115U | | 87.221.5853.0 | 4 |
| | | | |
| **Notes for application** | | | |
| Application (digital I/O with LED) | | | |
| Digital output modules | 6ES5 441-7LA11 | Fa. Siemens | |
| | 6ES5 451-7LA11 | Fa. Siemens | |
| Digital input modules | 6ES5 420-7LA11 | Fa. Siemens | |
| | 6ES5 430-7LA11 | Fa. Siemens | |
| Application (digital I/O without LED) | | | |
| Digital output modules | 6ES5 441-7LA11 | Fa. Siemens | |
| | 6ES5 451-7LA11 | Fa. Siemens | |
| | 6ES5 457-7LA11 | Fa. Siemens | |
| | 6ES5 458-7LA11 | Fa. Siemens | |
| | 6ES5 482-7LA11 | Fa. Siemens | |



Subject to change without further notice

# passive interfaces

**for S5-115U**

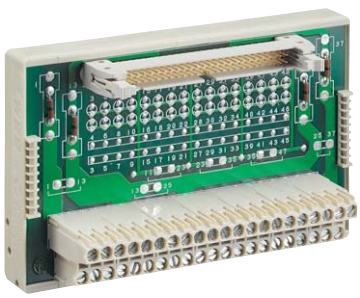

## Universal module

Dimensions (mm): W x H x D
128.5 x 80 x 61

Approvals:

| Description | Type | Part No.. | Box Qty |
|---|---|---|---|
| Universal module | UNIVERSAL-S5 | 87.221.6353.0 | 1 |
| | | | |
| | | | |
| | | | |
| | | | |
| **Wiring diagrams, dimensions** | **See page 571** | | |
| | | | |
| **Technical data** | | | |
| Maximum nominal voltage | 74 V DC / 60 V AC | | |
| Nominal current: | | | |
| connections 1, 13, 25, 37 maximum | 2.5 A | | |
| all remaining connections, maximum | 0.5 A | | |
| | | | |
| Ambient temperature | 0...+60 °C | | |
| Storage temperature | –40...+70 °C | | |
| | | | |
| Wire range (X2) | 22 – 12 AWG | | |
| finely stranded | 0.5 – 2.5 $mm^2$ | | |
| single core | 0.5 – 4 $mm^2$ | | |
| | | | |
| Installation of mounting rail | TS 35 or TS 32 | | |
| | | | |
| Terminal strip X2 | Type 8191E | | |
| | | | |
| | | | |
| **Accessories** | | | |
| Suitable 46 pole front plug (115U) | | 87.221.5853.0 | 4 |

electronics

# passive interfaces

**for S5-135U to 155U**

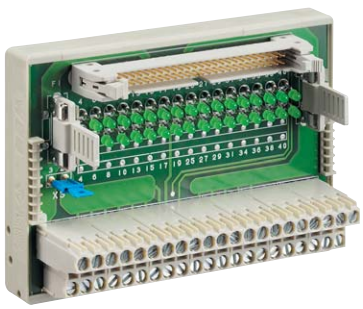

Dimensions (mm): W x H x D
115.5 x 80 x 61

## Digital I/O

Approvals:

| Description | Type | Part No.. | Box Qty |
|---|---|---|---|
| Digital I/O with LED | EAS-UE/D-L-135 | 87.222.6053.0 | 1 |
| Digital I/O without LED | EAS-UE/D-135 | 87.222.5953.0 | 1 |
| | | | |
| | | | |
| | | | |
| **Wiring diagrams, dimensions** | **See page 572** | | |
| | | | |
| **Technical data** | | | |
| Nominal voltage with LED | 24 V DC | | |
| Nominal voltage without LED | 75 V DC / 60 V AC | | |
| Nominal current per LED | 5 mA | | |
| Nominal current: | | | |
| Screw terminals 3 and 24, maximum | 2 x 5 A (without plug-in jumper) | | |
| | 1 x 10 A (with plug-in jumper) | | |
| all remaining connections, maximum | 0.5 A | | |
| | | | |
| Ambient temperature | 0...+60 °C | | |
| Storage temperature | –40...+70 °C | | |
| Wire range (X8) | 22 – 12 AWG | | |
| finely stranded | 0.5 – 2.5 $mm^2$ | | |
| single core | 0.5 – 4 $mm^2$ | | |
| | | | |
| Installation of mounting rail | TS 35 oder TS 32 | | |
| | | | |
| Terminal strip X2 | Type 8191E | | |
| | | | |
| **Accessories** | | | |
| Suitable 42 pole front plug (135U/155U) | 87.222.5853.0 | 5 | |
| | | | |
| **Notes for application** | | | |
| Digital output modules | 6ES5 441-74UA12 | Fa. Siemens | |
| | 6ES5 451-74UA12 | Fa. Siemens | |
| Digital input modules | 6ES5 420-74UA12 | Fa. Siemens | |
| | 6ES5 430-74UA12 | Fa. Siemens | |
| | | | |
| Digital input/output modules | 6ES5 482-4UA12 | Fa. Siemens | |



Subject to change without further notice

# passive interfaces

**for S5-135U to 155U**

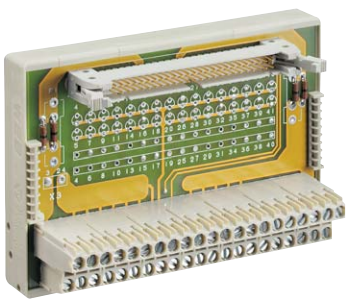

## Universal module
## Profibus DP

Approvals:

Dimensions (mm): W x H x D
115.5 x 80 x 61

| Description | Type | Part No.. | Box Qty |
|---|---|---|---|
| Universal module | UNIVERSAL-S5 | 87.222.6353.0 | 1 |
| | | | |
| | | | |
| | | | |
| | | | |
| **Wiring diagrams, dimensions** | **See page 572** | | |
| | | | |
| **Technical data** | | | |
| Nominal voltage | 24 V DC | | |
| Nominal current: | | | |
| Screw terminals 3 and 24, maximum | 5 A | | |
| all remaining connections, maximum | 0,5 A | | |
| | | | |
| Ambient temperature | 0...+60 °C | | |
| Storage temperature | –40...+70 °C | | |
| Wire range (X8) | 22 – 12 AWG | | |
| finely stranded | 0,5 – 2,5 mm² | | |
| single core | 0,5 – 4 mm² | | |
| | | | |
| Installation of mounting rail | TS 35 or TS 32 | | |
| | | | |
| Terminal strip X2 | Type 8191E | | |
| | | | |
| | | | |
| | | | |
| | | | |
| **Accessories** | | | |
| Suitable 42 pole front plug (135U/155U) | 87.222.5853.0 | 5 | |

electronics

# Interface System

# passive interfaces

## for S5-115U to 155U

**Important note for users:**
The relay outputs must be supplied from the same phase (e.g. L1).

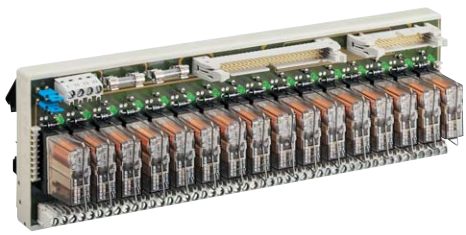

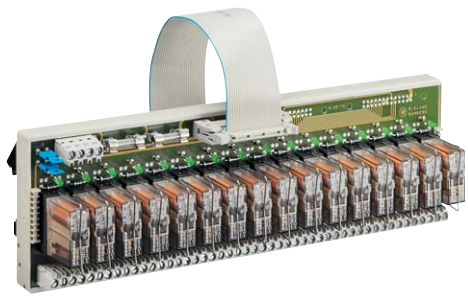

Both modules (main module and expansion module) are linked with a flat ribbon cable which is supplied with the expansion module.

Dimensions (mm): W x H x D
250 x 80 x 71

| Description | Main module: Type | Part No.. | Box Qty | Expansion module: Type | Part No.. | Box Qty |
|---|---|---|---|---|---|---|
| | RAB-FS16 W A-S5 | 87.221.6653.0 | 1 | RSB-FS16 W B-S5 | 87.221.6753.0 | 1 |
| | | | | | | |
| | | | | | | |
| | | | | | | |
| **Wiring diagrams, dimensions, Limit curve** | **See page 573** | | | **See page 573** | | |
| | | | | | | |
| **Technical data** | | | | | | |
| **Input data** | | | | | | |
| Operating voltage | 24 V DC +10% / –15% | | | 24 V DC +10% / –15% | | |
| Nominal current per input | 25 mA | | | 25 mA | | |
| Nominal capacity | 0.6 W | | | 0.6 W | | |
| Status display | Green LED | | | Green LED | | |
| | | | | | | |
| **Output data** | | | | | | |
| Maximum switching voltage | 250 V AC/DC(2) | | | 250 V AC/DC(2) | | |
| Maximum switching current | 8 A AC/DC(2) | | | 8 A AC/DC(2) | | |
| Maximum continuous current | 5 V AC/DC(2) | | | 5 V AC/DC(2) | | |
| Maximum switching capacity (resistive load) | 2000 VA/192W(2)) | | | 2000 VA/192W(2) | | |
| Minimum switching voltage | 12 V | | | 12 V | | |
| Minimum switching current | 100 mA | | | 100 mA | | |
| | | | | | | |
| **General data** | | | | | | |
| Pickup delay | ca. 8 ms | | | ca. 8 ms | | |
| Dropout delay | ca. 8 ms | | | ca. 8 ms | | |
| Contact material | AgCdO | | | AgCdO | | |
| Electrical endurance (resistive load) | | | | | | |
| 24 V DC / 2 A | $5 \times 10^6$ Switching cycles | | | $5 \times 10^6$ Switching cycles | | |
| 24 V DC / 5 A | $2{,}5 \times 10^6$ Switching cycles | | | $2.5 \times 10^6$ Switching cycles | | |
| 220 V AC / 1 A | $1 \times 10^6$ Switching cycles | | | $1 \times 10^6$ Switching cycles | | |
| 220 V AC / 5 A | $2.5 \times 10^5$ Switching cycles | | | $2.5 \times 10^5$ Switching cycles | | |
| Isolation voltage between input/output | 4 kV | | | 4 kV | | |
| Ambient temperature | 0 °C...+1) °C | | | 0 °C...+1) °C | | |
| Storage temperature | –40...+70 °C | | | –40...+70 °C | | |
| Wire range | 22 – 12 AWG | | | 22 – 12 AWG | | |
| finely stranded | 0.5 – 2.5 $mm^2$ | | | 0.5 – 2.5 $mm^2$ | | |
| single core | 0.5 – 4 $mm^2$ | | | 0.5 – 4 $mm^2$ | | |
| | | | | | | |
| Installation of mounting rail | TS 35 and TS 32 | | | TS 35 and TS 32 | | |
| | | | | | | |
| **Accessories** | | | | | | |
| Suitable 46 pole front plug (115U) | | 87.221.5853.0 | 4 | | 87.2221.5853.0 | 4 |
| Suitable 42 pole front plug (135U/155U) | | 87.222.5853.0 | 5 | | 87.222.5853.0 | 5 |
| | | | | | | |
| **Notes for application** | | | | | | |
| Digital output modules | 6ES5 441-7LA11 | Fa. Siemens | | 6ES5 441-7LA11 | Fa. Siemens | |
| | 6ES5 451-7LA11 | Fa. Siemens | | 6ES5 451-7LA11 | Fa. Siemens | |
| | 6ES5 441-4UA12 | Fa. Siemens | | 6ES5 441-4UA12 | Fa. Siemens | |
| | 6ES5 451-4UA12 | Fa. Siemens | | 6ES5 451-4UA12 | Fa. Siemens | |
| | | | | | | |
| | | | | | | |



Subject to change without further notice

# passive interfaces

## for S5-135U to 155U

### 42 pole front plug

Approvals:
1 module location

Dimensions (mm): W x H x D

| Description | Type | Part No.. | Box Qty |
|---|---|---|---|
| 42 pole front plug | 135/150 | 87.222.5853.0 | 5 |
| | | | |
| Connection via 50 pole ribbon plug connector (X3) | | | |
| in accordance with DIN 41651 | | | |
| | | | |
| **Wiring diagram** | **See page 574** | | |
| | | | |
| **Technical data** | | | |
| Operating voltage maximal | 75 V DC / 60 V AC | | |
| Front plug connection no3 and 24 | | | |
| for connection via a front connector | 6 A | | |
| for connection via ribbon plug connector (6 parallel pins) | 5 A | | |
| all remaining connections | 0.5 A | | |
| | | | |
| Ambient temperature | 0...+55 °C | | |
| Storage temperature | –40...+70 °C | | |
| | | | |
| **Notes for application** | | | |
| The ribbon plug connectors (X3) is fitted as standard with | | | |
| long interlocking hooks. IDC connectors with strain relief | | | |
| brackets are recommended for the connection of IDC | | | |
| headers. | | | |



Subject to change without further notice

## Flat round cable

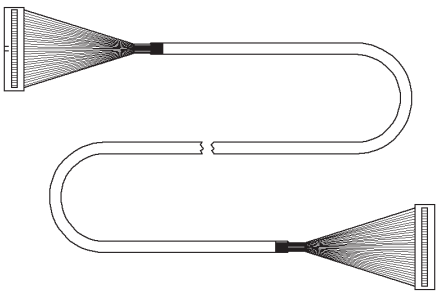

| Description | Flat round cable with shielding | | | Flat round cable without shielding | | |
|---|---|---|---|---|---|---|
| | Type | Part No.. | Box Qty | Type | Part No.. | Box Qty |
| 1.0 | FRK-S 100 | 08.000.0106.0 | | FRK 100 | 08.000.0107.4 | |
| 1.5 | FRK-S 150 | 08.000.0106.1 | | FRK 150 | 08.000.0107.5 | |
| 2.0 | FRK-S 200 | 08.000.0106.2 | | FRK 200 | 08.000.0107.6 | |
| 2.5 | FRK-S 250 | 08.000.0106.3 | | FRK 250 | 08.000.0107.7 | |
| 3.0 | FRK-S 300 | 08.000.0106.4 | | FRK 300 | 08.000.0107.8 | |
| 3.5 | FRK-S 350 | 08.000.0106.5 | | FRK 350 | 08.000.0108.9 | |
| 4.0 | FRK-S 400 | 08.000.0106.6 | | FRK 400 | 08.000.0108.0 | |
| 4.5 | FRK-S 450 | 08.000.0106.7 | | FRK 450 | 08.000.0108.1 | |
| 5.0 | FRK-S 500 | 08.000.0106.8 | | FRK 500 | 08.000.0108.2 | |
| 6.0 | FRK-S 600 | 08.000.0106.9 | | FRK 600 | 08.000.0108.3 | |
| 7.0 | FRK-S 700 | 08.000.0107.0 | | FRK 700 | 08.000.0108.4 | |
| 8.0 | FRK-S 800 | 08.000.0107.1 | | FRK 800 | 08.000.0108.5 | |
| 9.0 | FRK-S 900 | 08.000.0107.2 | | FRK 900 | 08.000.0108.6 | |
| 10.0 | FRK-S 1000 | 08.000.0107.3 | | FRK 1000 | 08.000.0108.7 | |
| | | | | | | |
| **Technical data** | | | | | | |
| Nominal voltage | 75 V DC / 60 V AC | | | 75 V DC / 60 V AC | | |
| Maximum permitted voltage per core | 0.85 A | | | 0.85 A | | |
| Maximum permitted total current of all cores | 20 A | | | 20 A | | |
| | | | | | | |
| Number of poles | 50 | | | 50 | | |
| Cross-section | AWG 28 (7 x 0.127 mm Ø) | | | AWG 28 (7 x 0.127 mm Ø) | | |
| Conductor material (tinned flexible leads) | Cu | | | Cu | | |
| | | | | | | |
| Maximum conductor resistance | 230 Ω/km | | | 230 Ω/km | | |
| Capacitance | 75 pF/m | | | 75 pF/m | | |
| Impedance | 115 Ω | | | 115 Ω | | |
| | | | | | | |
| Thermal stability | –20...+80 °C | | | –20...+80 °C | | |
| Isolation | PVC | | | PVC | | |
| IDC connector (with strain relief) | DIN 41651 | | | DIN 41651 | | |
| Overall diameter | 11.6 mm | | | 11.1 mm | | |

# passive interfaces

## D-Sub connector to screw terminal

### Wiring diagram

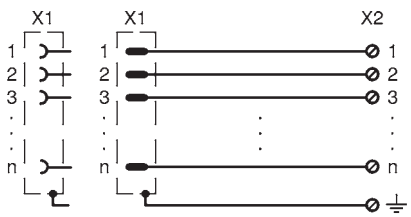


### Dimensions

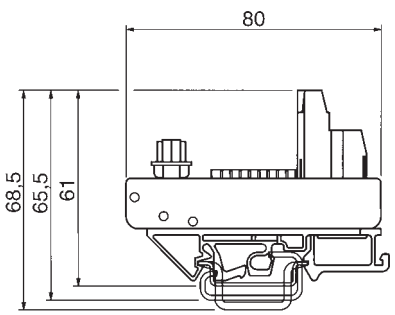


## IDC connector to screw terminal

### Wiring diagram

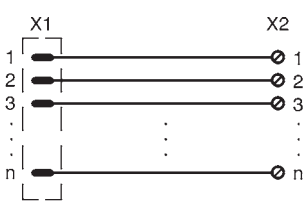


### Dimensions

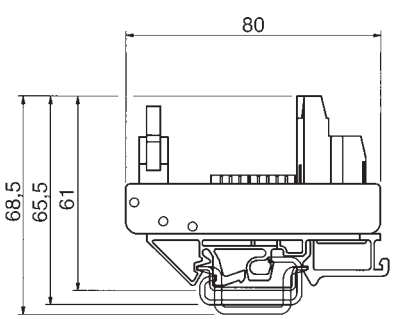




Subject to change without further notice

## Interface module for S5-115U Digital I/O

### Wiring diagram

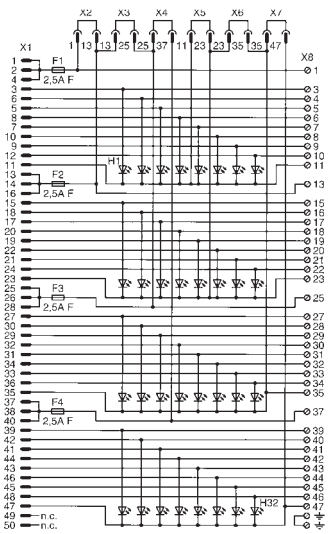


### Dimensions

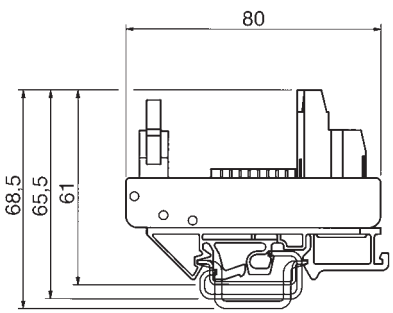


## Interface module for S5-115U Universal module

### Wiring diagram

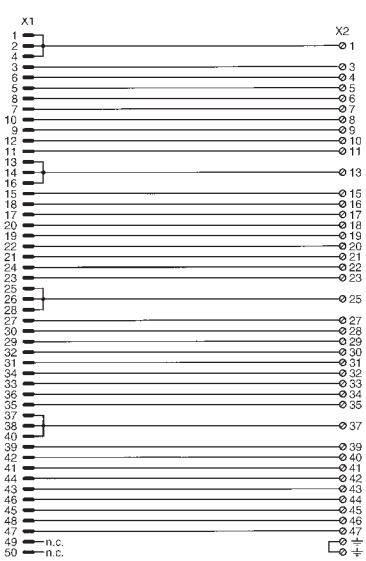


### Dimensions

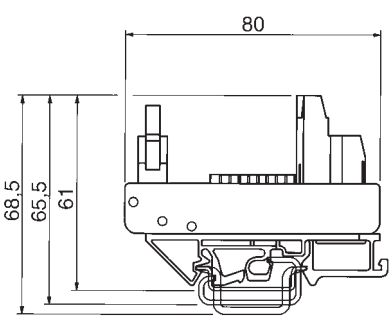

# passive interfaces

## Interface module for S5-135U to 155U Digital I/O

### Wiring diagram

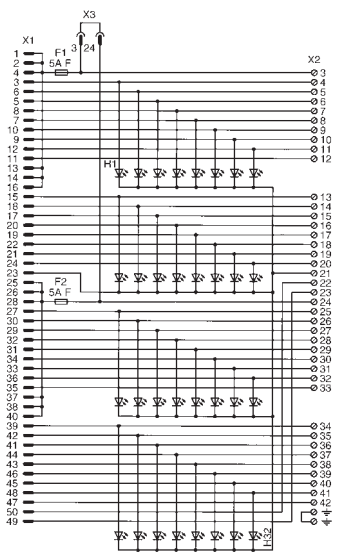


### Dimensions

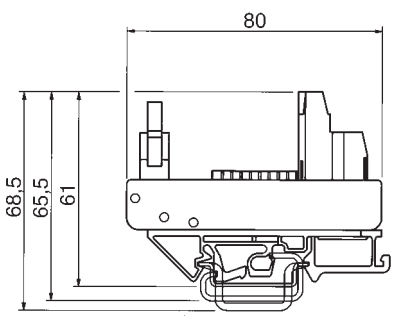


## Interface module for S5-135U to 155U Universal module

### Wiring diagram

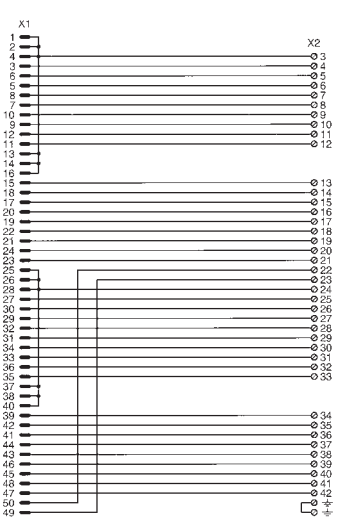


### Dimensions

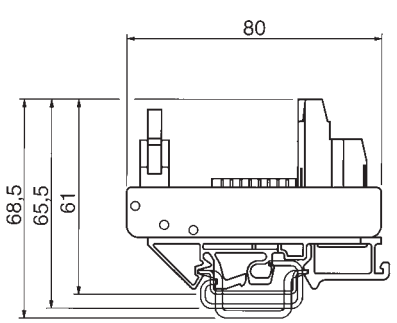




Subject to change without further notice

## Wiring diagram

### Relay output module for S5-115U to 155U Main module

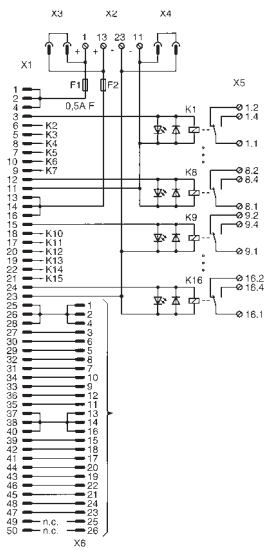


### Relay output module for S5-115U to 155U Expansion module

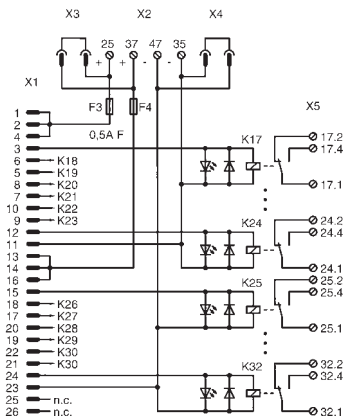


### Derating[1)]

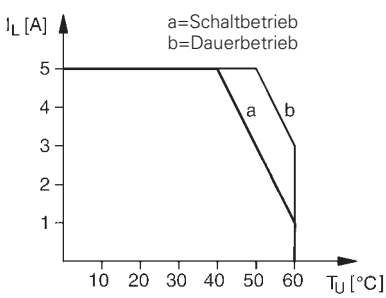


### Direct voltage limit curve[2)]

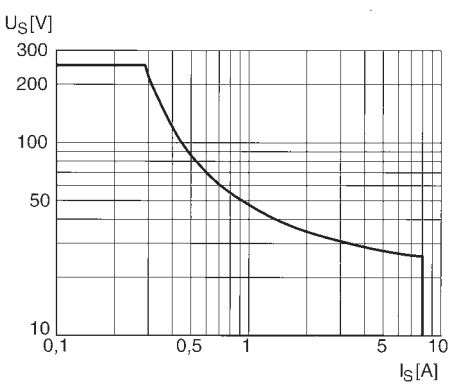


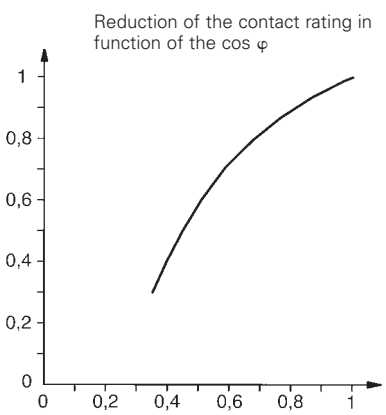


### Dimensions

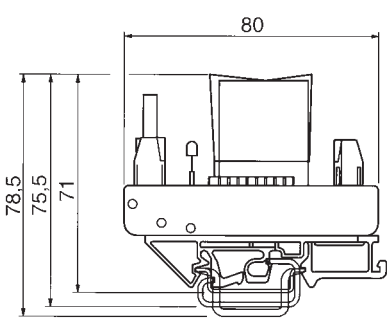

# interface for S5

## I/O plug system for S5-135U to 155U

### S42 pole front plug

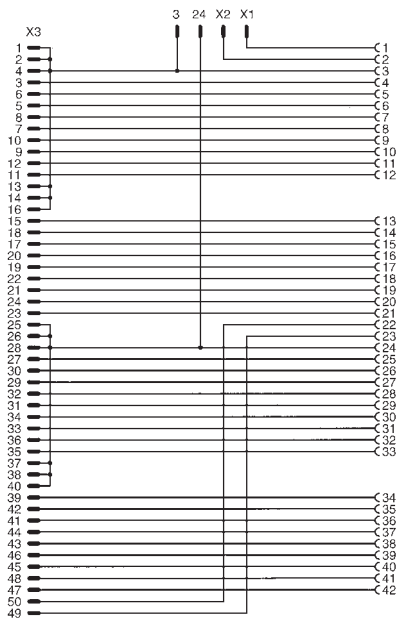




Subject to change without further notice

## Empty housings

# housing system

**dipos**
**WEB**
**WEB 1001/1002**
**WEG**
**wieBOX**
**Labelling systems**

Wielands empty housings offer:

- Universal application
- Individual modules
- Ranges that can be fitted together
- Complete housing systems
- Connectable housing
- Potentials can be bridged
- Screw or spring-clamp terminal
- Sealable
- Possibility of group labelling

CE In general all Wieland components which are obliged to have the CE identification are provided with the CE mark

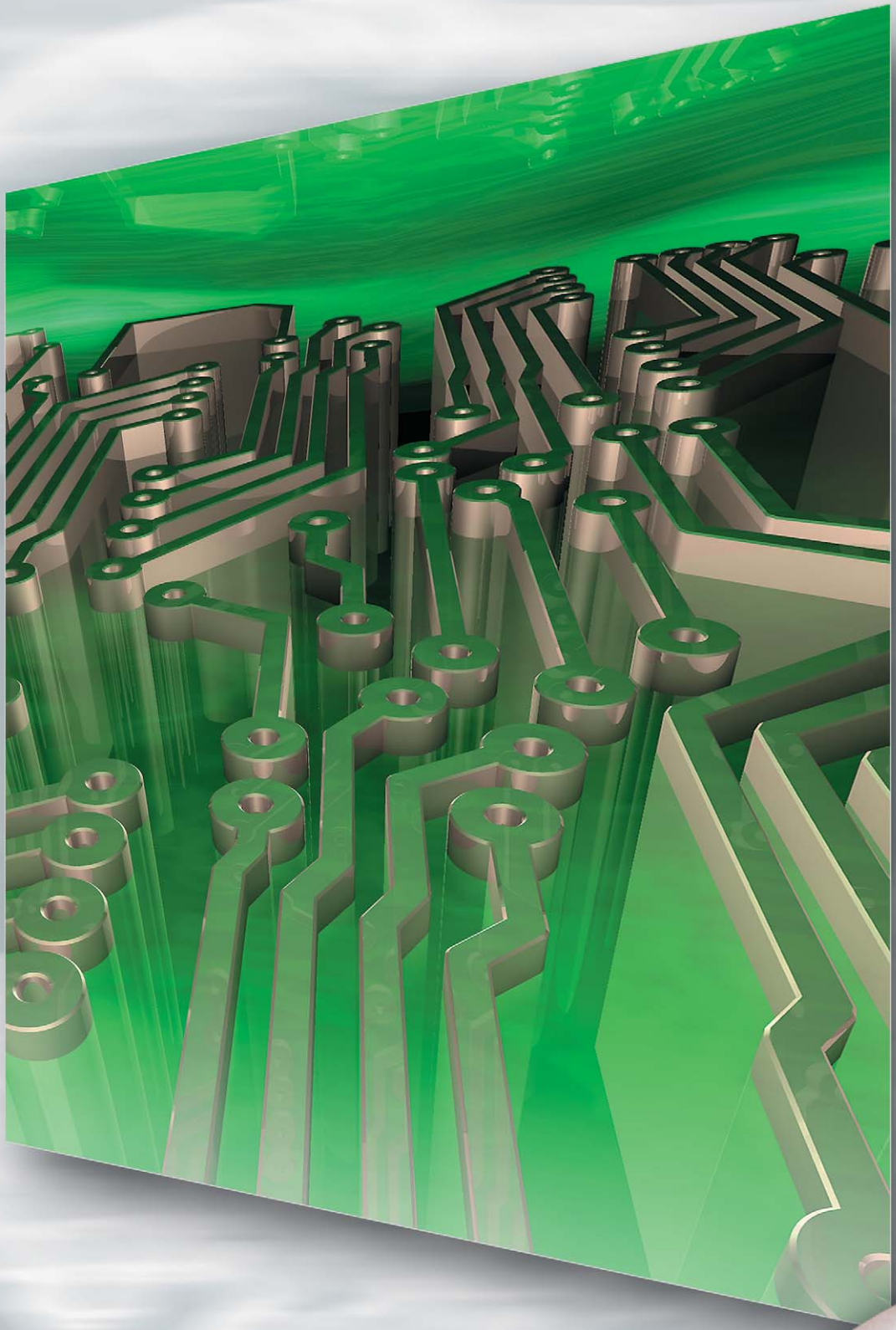

electronics

# Electronic components

## Empty housings

# Electronic empty housings

# housing system

## Empty housing features

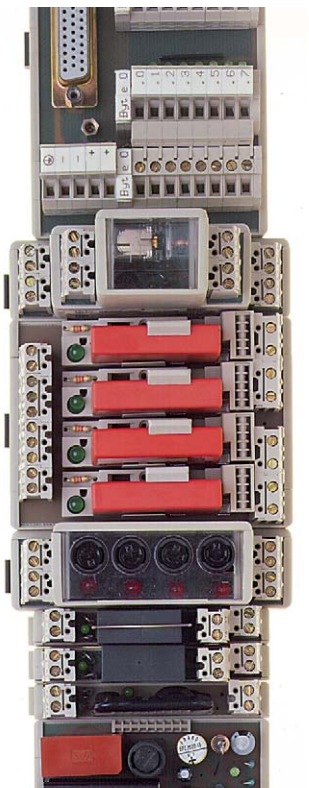

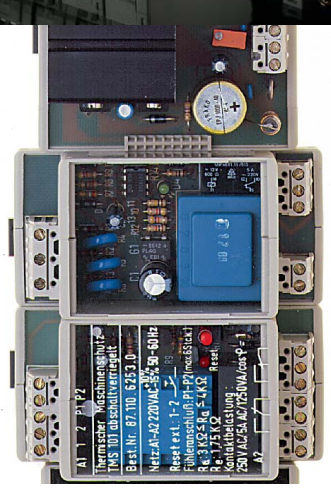

### WEB-Range

- ❒ installation housings, suitable for a variety of uses
- ❒ series of housings can be fitted together
- ❒ as individual modules
- ❒ or can be fitted together as a complete system
- ❒ mounting foot for all common mounting rails TS 35/TS 32
- ❒ to house fully equipped PCBs with various connection systems
- ❒ Can be used in such areas as:
  - – device and control systems for consumer electronics
  - – industrial electronics
  - – control engineering
  - – data systems engineer
  - – suitable for universal applications
- ❒ design available with/without components fitted (see "Electronic components" for designs with components)
- ❒ distribution of electronic components to take up minimum space
- ❒ WEB housing provides protection for sensitive components
- ❒ Wieland's system solution: Safety and functionality with field tested connection systems + high quality compact designs
- ❒ its advantages:
  - – long service life, even under extreme conditions
  - – technical design perfection
  - – reliability
  - – low costs
  - – problem-free application
  - – many housing variations

### WEB 1001
### closed design

- ❒ construction of upto 9 housing configurations without tools and using just a few individual parts
- ❒ connection system
  - – PCB terminals
  - – direct and two part pluggable connectors
  - – push-on terminals
  - – etc.
- ❒ PCB can be fitted with components and soldered independently of the housing
- ❒ Width of the design: from an overall housing height of 42 mm and PCB size (92,3 x 22,3 mm) up to 68 mixed connections in multi-tier design
- ❒ closed design provides protection for the electronic components
- ❒ with transparent cover for checking displays etc.
- ❒ Marker facility on the housing

### WEB 1001 WEB 1002
### open housing

- ❒ height of this series only 15,8 mm (without U-Foot)
- ❒ open modules can be assembled using the 3 different elements to form any length
- ❒ complete sets of special components can be fitted
- ❒ numerous facilities for connecting external conductors, screw, pluggable, two part and push on terminals
- ❒ system advantages:
  - – can be assembled quickly due to the plug-in modular system principle
  - – high torsional rigidity due to the firm interconnection of the individual elements
  - – can be fitted to all DIN EN mounting rails 32/35 using the universal foot

### *wieBox* CN range

- ❒ for assembling electronic components
- ❒ housing designed with twin shell casing
- ❒ in three different designs widths 19 mm, 22,5 mm and 26 mm
- ❒ can be fitted with 2 or 3 pole terminals which are provided with a left or right angled soldering pins
- ❒ insertion of the 2 pole supply terminals in 19mm housing possible up to a maximum of 8 poles
- ❒ 3 pole terminals up to a maximum of 12 poles can be used for the design widths 22,5 mm and 26 mm
- ❒ housing can be selected with or without ventilation slots
- ❒ mounting foot for TS 35 mounting rail
- ❒ with solid or removable front panels:
  - – for plugging in or latching in



Subject to change without further notice

# housing system

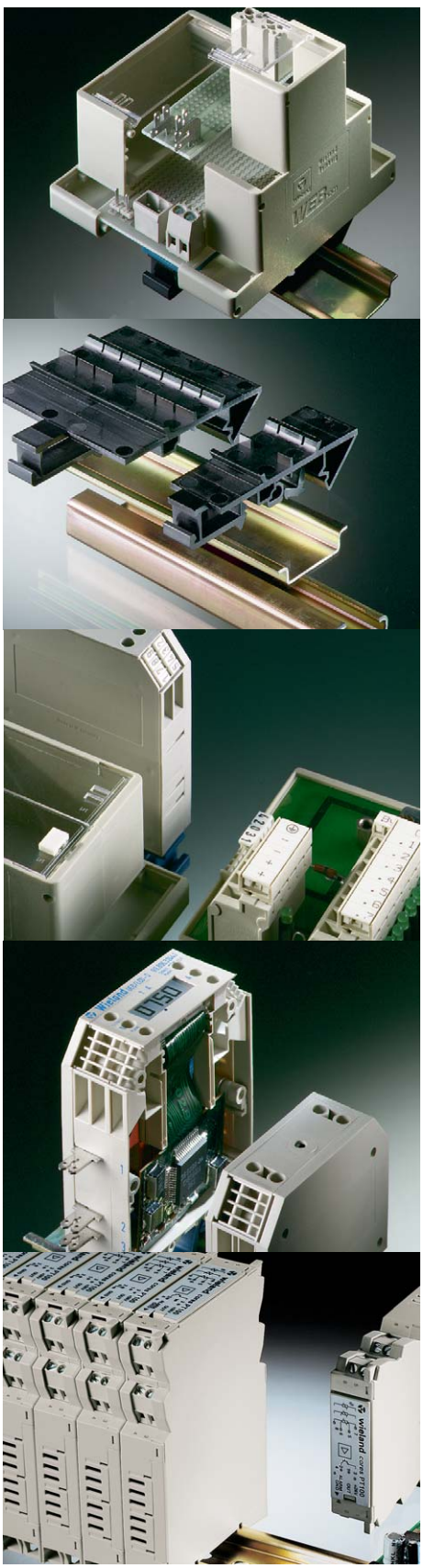

## WEB connection system

- independent of the housing component
- up to 68 connections per housing
- no type of connection prescribed therefore screw, puggable, two-part terminals or even mixed systems can be used

## Handling

- PCBs can be fitted with components independantly of the housing
- mechanical soldering of the PCB to the terminals and components, also regard less of the housing.
- horizontal (WEB) or vertical (WEG) arrangement of the PCB's on several levels within the housing
- housing components can be fitted together

## Attachment to the mounting rail

- by means of a slot mounting facility for one or more mounting feet
- U-foot for TS 32 and TS 35

## WEG-Empty housings

- compact housing made from high quality material
- closed housing available in four different sizes
- distribution of electronic components to take up minimum space
- WEG-Empty housings provide protection for sensitive components
- design widths: between 16,5 mm and 28,5 mm
- design height: either 70,5 mm or 98 mm
- modules of various lengths can be mounted side by side using the U-foot which snaps into place on the DIN rail
- space saving arrangement of electronic components both on DIN rail and on G rail (U-foot)
- connection by screw terminal
- supplied:
  – pre-assembled
  – connecting terminal plates supplied
- connection of single core and finely stranded conductors from 0,14 mm$^2$ to 6 mm$^2$, stranded conductors from 0,14 mm$^2$ to 4 mm$^2$

## Labelling systems

- clip-in terminal and housing markers
- multi digit marker tags
- single tag, marker strips
- marker branch
- individual labelling possible using figures or symbols

WEB
closed housing

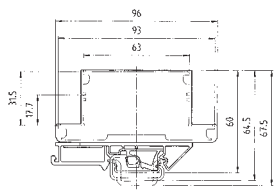

WEB
closed housing

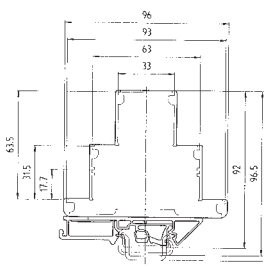

WEB
open housing

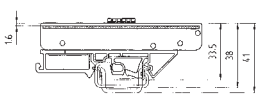

WEB
open housing

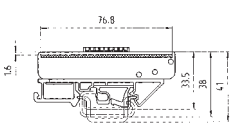

WEG

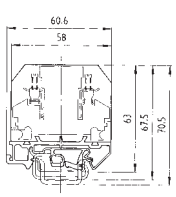

WEG

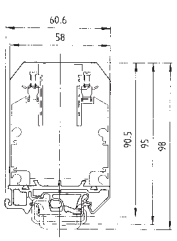

wieBOX

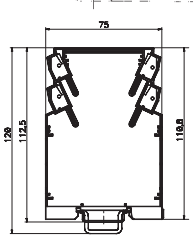

electronics

# Electronic empty housings

dipos

**Typical applications**

- ❒ relay modules
- ❒ timer relay modules
- ❒ optocoupler (solid state) modules
- ❒ compact power supply units
- ❒ converter for standard analogue signals
- ❒ signal conditoning for RTD's and thermocouples
- ❒ programmable signal conditioning
- ❒ potential monitors
- ❒ overvoltage protection
- ❒ low cost I/O system
- ❒ fieldbus interfacing

**Possible applications and markets**

- ❒ mechanical and system engineering
- ❒ electrical/electronics industry, device manufacturer
- ❒ chemical industry and process automation
- ❒ power engineering and power stations
- ❒ building technology, heating, ventilation and air conditioning technology (HVAC)
- ❒ car industry, aircraft, ships
- ❒ consumer goods
- ❒ foodstuffs
- ❒ utilities
- ❒ monitoring of environmental pollutions
- ❒ traffic control



Subject to change without further notice

# dipos

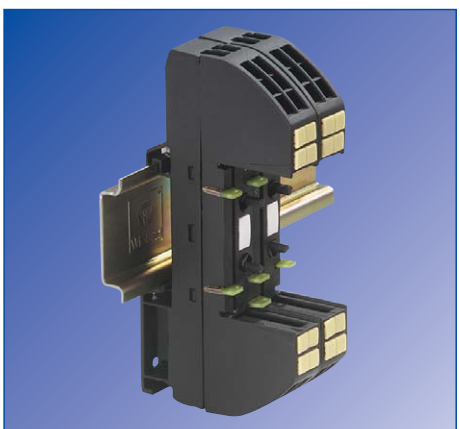

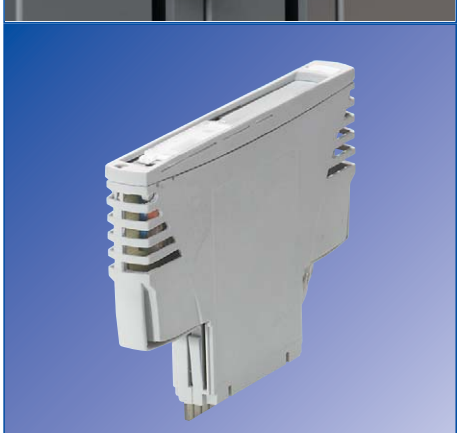

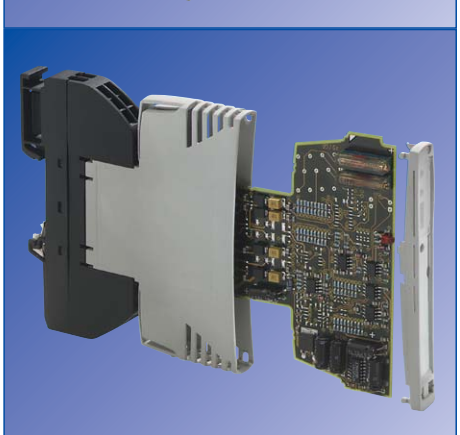

**Properties of the housing**

- ❒ variety of housings for industrial process and building automation
- ❒ connectable housing consisting of module boards and modular top sections
- ❒ housing can be extended in the future in 5 mm intervals
- ❒ 4 (at an overall width of 12.5 mm) or 6 (at an overall width of 17.5 mm) potentials can be bridged between modules
- ❒ 8 connections in an overall width of 12.5 mm
- ❒ type of connection can be freely selected: screw or spring-clamp terminal
- ❒ integral connection
- ❒ labelling not covered by wiring
- ❒ each connection can be marked with its own marker tag
- ❒ coloured marker tags available
- ❒ group labelling in the base and on cover of housing
- ❒ Locking cover – to prevent unwanted changes
- ❒ ventilation slots
- ❒ PCB is terminal free
- ❒ module board for TS 32 and TS 35 mounting rails

# Electronic empty housing
# Modular housing system

dipos

Housing properties:
- connectable housing
- various design widths
- potential bridging between housings
- at least 8 connections
- connection type: screw or spring clamp

| Dimensions (mm): W x H x D | Approvals: UL, CSA in preparation<br>12.5 x 100 x 100 (Standard) | | | Approvals: UL, CSAin preparation<br>17.5 x 100 x 100 (Standard) | | |
|---|---|---|---|---|---|---|
| **Description** | Type | Part No. | Box Qty | Type | Part No. | Box Qty |
| **Module board *dipos* UMC** | | | | | | |
| with screw terminals (screw thread M3) | | 80.060.0000.1 | | | 80.060.1000.1 | |
| with spring clamp | | 80.060.0001.1 | | | 80.060.1001.1 | |
| | | | | | | |
| **Empty housings** | | 80.061.0010.3 | | | 80.061.1010.3 | |
| | | | | | | |
| **Dimensions of housing and module board** | **See page 600** | | | **See page 600** | | |
| | | | | | | |
| **Technical data** | Type | Part No. | Box Qty | Type | Part No. | Box Qty |
| Rated voltage | 230/400 V AC | | | 230/400 V AC | | |
| Maximum rated current | 10 A per contact | | | 10 A pro contakt | | |
| Total current | 10 A | | | 10 A | | |
| Overvoltage category | III | | | III | | |
| Degree of pollution | 2 | | | 2 | | |
| Connections per side | 4 Klemmen, 4 Potenziale pro Seite | | | 6 Klemmen, 6 Potenziale pro Seite | | |
| Wire range of screw terminals | | | | | | |
| finely stranded/stranded | 0.2 $mm^2$ – 2.5 $mm^2$ | | | 0.2 $mm^2$ – 2.5 $mm^2$ | | |
| single core | 0.2 $mm^2$ – 4 $mm^2$ | | | 0.2 $mm^2$ – 4 $mm^2$ | | |
| flexible with AE with/without plastic sleeve | 0.25 $mm^2$ – 2.5 $mm^2$ / 0.25 $mm^2$ – 1.5 $mm^2$ | | | 0.25 $mm^2$ – 2.5 $mm^2$ / 0.25 $mm^2$ – 1.5 $mm^2$ | | |
| AWG | 24 – 12 | | | 24 – 12 | | |
| Tightening torque | 0.5 – 0,6 Nm | | | 0.5 – 0,6 Nm | | |
| Wire range of spring-clamp terminal | 0.08 $mm^2$ – 2.5 $mm^2$ | | | 0.08 $mm^2$ – 2.5 $mm^2$ | | |
| with AE | 0.08 $mm^2$ – 1.5 $mm^2$ | | | 0.08 $mm^2$ – 1.5 $mm^2$ | | |
| AWG | 28 – 12 | | | 28 – 12 | | |
| Maximum number of bridge to flanking unit | 4 | | | 6 | | |
| | | | | | | |
| Fire protection | V2 | | | V2 | | |
| Type of protection | IP 20 | | | IP 20 | | |
| Ambient temperature | –25 °C...+100 °C | | | –25 °C...+100 °C | | |
| Storage temperature | –40 °C...+100 °C | | | –40 °C...+100 °C | | |
| | | | | | | |
| Regulations, norms | EN 60947-1 | | | EN 60947-1 | | |
| | DIN EN 50178 | | | DIN EN 50178 | | |
| | DIN VDE 0611 T1 | | | DIN VDE 0611 T1 | | |
| | VDE 0110 | | | VDE 0110 | | |
| | VDE 106 | | | VDE 106 | | |
| | | | | | | |
| **Accessories** | | | | | | |
| Coding branch | | Z5.563.0453.0 | 25 | | Z5.563.0453.0 | 25 |
| Plug-in jumper | | Z8.000.0229.5 | 50 | | Z8.000.0229.5 | 50 |
| Large marker tag, white, blank | | 04.249.4053.0 | 500 | | 04.249.4053.0 | 500 |
| Small marker tag | | | | | | |
| unmarked, red | | 04.249.1053.0 | 500 | | 04.249.1053.0 | 500 |
| unmarked, blue | | 04.249.1553.0 | 500 | | 04.249.1553.0 | 500 |
| unmarked, white | | 04.249.2053.0 | 500 | | 04.249.2053.0 | 500 |



Subject to change without further notice

# dipos

Housing properties:
- connectable housing
- various design widths
- potential bridging between housings
- at least 8 connections
- connection type: screw or spring clamp

Dimensions (mm): W x H x D

Approvals: UL, CSA in preparation
22.5 x 100 x 100 (Standard)

| Description | Type | Part No. | Box Qty |
|---|---|---|---|
| **Module board *dipos* UMC** | | | |
| with screw terminals (screw thread M3) | | 80.060.2000.1 | |
| with spring clamp | | 80.060.2001.1 | |
| | | | |
| **Empty housings** | | 80.061.2010.3 | |
| | | | |
| **Dimensions of housing and module board** | **See page 600** | | |
| | | | |
| **Technical data** | Type | Part No. | Box Qty |
| Rated voltage | 230/400 V AC | | |
| Maximum rated current | 10 A per contact | | |
| Total current | 10 A | | |
| Overvoltage category | III | | |
| Degree of pollution | 2 | | |
| Connections per side | 8 Klemmen, 6 Potenziale pro Seite | | |
| Wire range of screw terminals | | | |
| finely stranded/stranded | 0.2 $mm^2$ – 2.5 $mm^2$ | | |
| single core | 0.2 $mm^2$ – 4 $mm^2$ | | |
| flexible with AE with/without plastic sleeve | 0.25 $mm^2$ – 2.5 $mm^2$ / 0.25 $mm^2$ – 1.5 $mm^2$ | | |
| AWG | 24 – 12 | | |
| Tightening torque | 0.5 – 0.6 Nm | | |
| Wire range of spring-clamp terminal | 0.08 $mm^2$ – 2.5 $mm^2$ | | |
| with AE | 0.08 $mm^2$ – 1.5 $mm^2$ | | |
| AWG | 28 – 12 | | |
| Maximum number of bridge to flanking unit | 6 | | |
| | | | |
| Fire protection | V2 | | |
| Type of protection | IP 20 | | |
| Ambient temperature | –25 °C...+100 °C | | |
| Storage temperature | –40 °C...+100 °C | | |
| | | | |
| Regulations, norms | EN 60947-1 | | |
| | DIN EN 50178 | | |
| | DIN VDE 0611 T1 | | |
| | VDE 0110 | | |
| | VDE 106 | | |
| | | | |
| **Accessories** | | | |
| Coding branch | | Z5.563.0453.0 | 25 |
| Plug-in jumper | | Z8.000.0229.5 | 50 |
| Large marker tag, white, blank | | 04.249.4053.0 | 500 |
| Small marker tag | | | |
| unmarked, red | | 04.249.1053.0 | 500 |
| unmarked, blue | | 04.249.1553.0 | 500 |
| unmarked, white | | 04.249.2053.0 | 500 |

electronics

# Electronic empty housings

WEB

Possible areas of application:
- devices and controllers for consumer electronics
- industrial electronics
- control technology
- data technology

Material:

| | | |
|---|---|---|
| Housing: | PA 6 | UL 94-HB |
| Foot: | PA 66 | UL 94-V2 |
| Cover: | PC | UL 94-HB |

| Dimensions (mm): W x H x D / for PCB | **Size 1** 27 x 42 x 96 / for PCB 93 x 22 | | | **Size 2** 27 x 74 x 96 / for PCB 93/63 x 22 | | |
|---|---|---|---|---|---|---|
| **Description** | | Part No. | Box Qty | | Part No. | Box Qty |
| **Empty housing, complete with U-Foot, without PCB** | | 87.010.0053.0 | 10 | | 87.020.0053.0 | 10 |
| **Empty housing, complete with Foot TS 35, without PCB** | | 86.010.0053.0 | 10 | | 86.020.0053.0 | 10 |
| (The empty housings are supplied unassembled and without PCBs) | 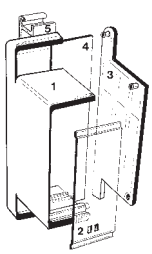 | | | 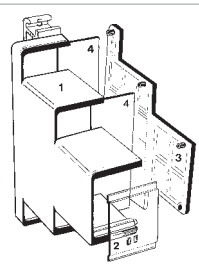 | | |
| **Housing dimensions** | **See page 601** | | | **See page 601** | | |
| **Individual parts** | | | | | | |
| 1. Housing | | 01.001.5153.0 | 50 | | 01.001.5053.0 | |
| 2. Cover with marking facility | | 04.312.0654.0 | 50 | | 04.312.0554.0 | 50 |
| Cover without marking facility | | | | | | |
| 3. Cover plate | | 07.310.8553.0 | 50 | | 07.310.8453.0 | 50 |
| 4. Universal foot | | 05.583.0053.0 | 50 | | 05.583.0053.0 | 50 |
| Foot TS 35 | | Z5.595.2153.0 | 50 | | Z5.595.2153.0 | 50 |
| **Connection technique** | | | | | | |
| PCB terminals with 5 mm pitch | Type 8180, 8181, 8182, 8190, 8191, 8192, 8113, 8142 | | | Type 8180, 8181, 8182, 8190, 8191, 8192, 8113, 8142 | | |
| PCB terminals with 5.08 mm pitch | Type 8213, 8281, 8291, 8292 | | | Type 8213, 8281, 8291, 8292 | | |
| PCB terminals with 7.5 mm pitch | Type 8313, 8390, 8391 | | | Type 8313, 8390, 8391 | | |
| PCB terminals with 7.62 mm pitch | Type 8413, 8491 | | | Type 8413, 8491 | | |
| PCB terminals with 3.5 mm pitch | Type 8543, 8593 | | | Type 8543, 8593 | | |
| PCB terminals with 3.81 mm pitch | Type 8813, 8893 | | | Type 8813, 8893 | | |
| **Accessories** | | | | | | |
| Flat connector | 6.3 mm, straight | 05.555.8521.0 | 50 | 6.3 mm, straight | 05.555.8521.0 | 50 |
| Flat connector | 6.3 mm, angled | 05.555.8721.0 | 50 | 6.3 mm, angled | 05.555.8721.0 | 50 |
| Flat connector | 2 x 2.8 mm, straight | 05.555.9121.0 | 50 | 2 x 2.8 mm, straight | 05.555.9121.0 | 50 |
| Flat connector | 2 x 2.8 mm, angled | 05.555.8921.0 | 50 | 2 x 2.8 mm, angled | 05.555.8921.0 | 50 |
| Flat connector | 2.8 mm, straight | 05.555.8621.0 | 50 | 2.8 mm, straight | 05.555.8621.0 | 50 |
| Flat connector | 2.8 mm, angled | 05.555.8821.0 | 50 | 2.8 mm, angled | 05.555.8821.0 | 50 |
| Flat connector: Materials | Ms tin plated | | | Ms tin plated | | |
| Mounting rail: diameter | 1.3 – 1.4 mm | | | 1.3 – 1.4 mm | | |
| Mounting rail: spacing | 5 mm | | | 5 mm | | |
| Mounting rail 35, DIN rail 7.5 high L = 2 m | 35 x 27 x 7,5 EN 60715 | 98.300.0000.0 | 1 | 35 x 27 x 7,5 EN 60715 | 98.300.0000.0 | 1 |
| Mounting rail 35, DIN rail 15 high L = 2 m | 35 x 24 x 15 EN 60715 | 98.360.0000.0 | 1 | 35 x 24 x 15 EN 60715 | 98.360.0000.0 | 1 |
| Mounting rail 32, G-rail L = 2 m | 9006 EN 60715 G-32 | 98.190.0000.0 | 1 | 9006 EN 60715 G-32 | 98.190.0000.0 | 1 |
| End clamp, Polyamide 8 mm wide TS 35 | 9708/2 S 35 | Z5.522.8553.0 | 100 | 9708/2 S 35 | Z5.522.8553.0 | 100 |
| End clamp, Polyamide 10 mm wide U-Foot | WE 1/U | Z5.523.5753.0 | 100 | WE 1/U | Z5.523.5753.0 | 100 |
| Marker tag holder | 9003 C/4 | 04.242.1050.0 | 200 | 9003 C/4 | 04.242.1050.0 | 200 |
| Marker tag, unmarked | 9003 C | 04.241.0651.0 | 500 | 9003 C | 04.241.0651.0 | 500 |
| Marker tag, marked | 9003 CB | 04.841.0651.0 | 500 | 9003 CB | 04.841.0651.0 | 500 |
| See pages 582–585 for further labelling systems | | | | | | |



Subject to change without further notice

# WEB

Possible areas of application:
- devices and controllers for consumer electronics
- industrial electronics
- control technology
- data technology

Material:

| | | |
|---|---|---|
| Housing: | PA 6 | UL 94-HB |
| Foot: | PA 66 | UL 94-V2 |
| Cover: | PC | UL 94-HB |

Dimensions (mm): W x H x D / for PCB

**Size 3**
93 x 42 x 96 / for PCB 93 x 45

**Size 4**
70.5 x 74 x 96 / for PCB 93/63 x 45

| **Description** | | Part No. | Box Qty | | Part No. | Box Qty |
|---|---|---|---|---|---|---|
| **Empty housings, complete with U-Foot, without PCB** | | 87.030.0053.0 | 10 | | 87.040.0053.0 | 10 |
| **Empty housings, complete with Foot TS 35, without PCB** | | 86.030.0053.0 | 10 | | 86.040.0053.0 | 10 |
| (The empty housings are supplied unassembled and without PCBs) | | 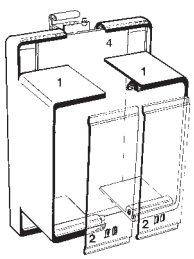 | | | 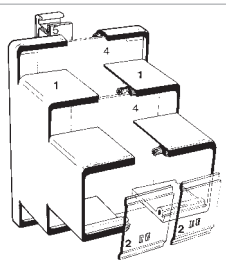 | |
| **Housing dimensions** | | **See page 601** | | | **See page 601** | |
| | | | | | | |
| **Individual parts** | | | | | | |
| 1. Housing | | 2 x | 01.001.5153.0 | 50 | 2 x | 01.001.5053.0 |
| 2. Cover with marking facility | | 2 x | 04.312.0654.0 | 50 | 2 x | 04.312.0554.0 50 |
| Cover without marking facility | | 1 x | 04.312.3054.0 | 10 | 1 x | 04.312.3354.0 50 |
| 3. Cover plate | | | | | | |
| 4. Universal foot | | | 05.583.0053.0 | 50 | | 05.583.0053.0 50 |
| Foot TS 35 | | | Z5.595.2153.0 | 50 | | Z5.595.2153.0 50 |
| | | | | | | |
| **Connection technique** | | | | | | |
| PCB terminals with 5 mm pitch | | Type 8180, 8181, 8182, 8190, 8191, 8192, 8113, 8142 | | | Type 8180, 8181, 8182, 8190, 8191,8192, 8113, 8142 | |
| PCB terminals with 5.08 mm pitch | | Type 8213, 8281,8291, 8292 | | | Type 8213, 8281,8291, 8292 | |
| PCB terminals with 7.5 mm pitch | | Type 8313, 8390, 8391 | | | Type 8313, 8390, 8391 | |
| PCB terminals with 7.62 mm pitch | | Type 8413, 8491 | | | Type 8413, 8491 | |
| PCB terminals with 3.5 mm pitch | | Type 8543, 8593 | | | Type 8543, 8593 | |
| PCB terminals with 3.81 mm pitch | | Type 8813, 8893 | | | Type 8813, 8893 | |
| | | | | | | |
| **Accessories** | | | | | | |
| Flat connector | | 6.3 mm, straight | 05.555.8521.0 | 50 | 6.3 mm, straight | 05.555.8521.0 50 |
| Flat connector | | 6.3 mm, angled | 05.555.8721.0 | 50 | 6.3 mm, angled | 05.555.8721.0 50 |
| Flat connector | | 2 x 2.8 mm, straight | 05.555.9121.0 | 50 | 2 x 2.8 mm, straight | 05.555.9121.0 50 |
| Flat connector | | 2 x 2.8 mm, angled | 05.555.8921.0 | 50 | 2 x 2.8 mm, angled | 05.555.8921.0 50 |
| Flat connector | | 2.8 mm, straight | 05.555.8621.0 | 50 | 2.8 mm, straight | 05.555.8621.0 50 |
| Flat connector | | 2.8 mm, angled | 05.555.8821.0 | 50 | 2.8 mm, angled | 05.555.8821.0 50 |
| Flat connector: Materials | | Ms tin plated | | | Ms tin plated | |
| Mounting rail: diameter | | 1.3 -1.4 mm | | | 1.3 -1.4 mm | |
| Mounting rail: spacing | | 5 mm | | | 5 mm | |
| | | | | | | |
| | | | | | | |
| Mounting rail 35, DIN rail 7.5 high | L = 2 m | 35 x 27 x 7,5 EN 60715 | 98.300.0000.0 | 1 | 35 x 27 x 7,5 EN 60715 | 98.300.0000.0 1 |
| Mounting rail 35, DIN rail 15 high | L = 2 m | 35 x 24 x 15 EN 60715 | 98.360.0000.0 | 1 | 35 x 24 x 15 EN 60715 | 98.360.0000.0 1 |
| Mounting rail 32, G-rail | L = 2 m | 9006 EN 60715 G-32 | 98.190.0000.0 | 1 | 9006 EN 60715 G-32 | 98.190.0000.0 1 |
| End clamp, Polyamide | 8 mm wide TS 35 | 9708/2 S 35 | Z5.522.8553.0 | 100 | 9708/2 S 35 | Z5.522.8553.0 100 |
| End clamp, Polyamide | 10 mm wide U-Foot | WE 1/U | Z5.523.5753.0 | 100 | WE 1/U | Z5.523.5753.0 100 |
| Marker tag holder | | 9003 C/4 | 04.242.1050.0 | 200 | 9003 C/4 | 04.242.1050.0 200 |
| Marker tag, unmarked | | 9003 C | 04.241.0651.0 | 500 | 9003 C | 04.241.0651.0 500 |
| Marker tag, marked | | 9003 CB | 04.841.0651.0 | 500 | 9003 CB | 04.841.0651.0 500 |
| See pages 582–585 for further labelling systems | | | | | | |

# Electronic empty housings

WEB

Possible areas of application:
- devices and controllers for consumers electronics
- industrial electronics
- control technology
- data technology

Material:

| | | |
|---|---|---|
| Housing: | PA 6 | UL 94-HB |
| Foot: | PA 66 | UL 94-V2 |
| Cover: | PC | UL 94-HB |

| | Size 6 | Size 7 |
|---|---|---|
| Dimensions (mm): W x H x D / for PCB | 70.5 x 42 x 96 / for PCB 93 x 67 | 70.5 x 74 x 96 / for PCB 93/63 x 67 |

| Description | | Part No. | Box Qty | | Part No. | Box Qty |
|---|---|---|---|---|---|---|
| **Empty housings, complete with U-Foot, without PCB** | | 87.060.0053.0 | 10 | | 87.070.0053.0 | 10 |
| (The empty housings are supplied unassembled and without PCBs) | | 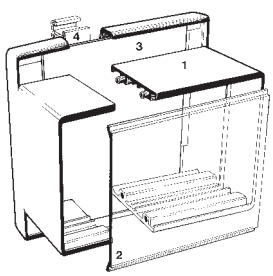 | | | 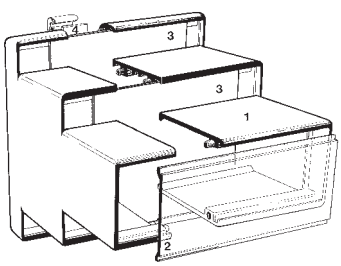 | |
| **Housing dimensions** | | **See page 601** | | | **See page 601** | |
| | | | | | | |
| **Individual parts** | | | | | | |
| 1. Housing | | 01.001.5153.0 | 50 | | 01.001.5353.0 | 10 |
| Housing | | 01.001.5453.0 | 50 | | 01.001.5053.0 | |
| 2. Cover | | 04.312.3154.0 | 50 | | 04.312.3454.0 | 50 |
| 3. Universal foot | | 05.583.0153.0 | 50 | | 05.583.0153.0 | 50 |
| | | | | | | |
| **Connection technique** | | | | | | |
| PCB terminals with 5 mm pitch | | Type 8180, 8181, 8182, 8190, 8191, 8192, 8113, 8142 | | | Type 8180, 8181, 8182, 8190, 8191, 8192, 8113, 8142 | |
| | | | | | | |
| PCB terminals with 5.08 mm pitch | | Type 8213, 8281, 8291, 8292 | | | Type 8213, 8281, 8291, 8292 | |
| PCB terminals with .5 mm pitch | | Type 8313, 8390, 8391 | | | Type 8313, 8390, 8391 | |
| PCB terminals with 7.62 mm pitch | | Type 8413, 8491 | | | Type 8413, 8491 | |
| PCB terminals with 3.5 mm pitch | | Type 8543, 8593 | | | Type 8543, 8593 | |
| PCB terminals with 3.81 mm pitch | | Type 8813, 8893 | | | Type 8813, 8893 | |
| | | | | | | |
| **Technical data** | | | | | | |
| Materials | | Ms tin plated | | | Ms tin plated | |
| Mounting rail: diameter | | 1.3 –1.4 mm | | | 1.3 –1.4 mm | |
| Mounting rail: spacing | | 5 mm | | | 5 mm | |
| | | | | | | |
| **Accessories** | | | | | | |
| Flat connector | | 6.3 mm, straight | 05.555.8521.0 | 50 | 6.3 mm, straight | 05.555.8521.0 | 50 |
| Flat connector | | 6.3 mm, angled | 05.555.8721.0 | 50 | 6.3 mm, angled | 05.555.8721.0 | 50 |
| Flat connector | | 2 x 2.8 mm, straight | 05.555.9121.0 | 50 | 2 x 2.8 mm, straight | 05.555.9121.0 | 50 |
| Flat connector | | 2 x 2.8 mm, angled | 05.555.8921.0 | 50 | 2 x 2.8 mm, angled | 05.555.8921.0 | 50 |
| Flat connector | | 2.8 mm, straight | 05.555.8621.0 | 50 | 2.8 mm, straight | 05.555.8621.0 | 50 |
| Flat connector | | 2.8 mm, angled | 05.555.8821.0 | 50 | 2.8 mm, angled | 05.555.8821.0 | 50 |
| | | | | | | |
| Mounting rail 35, DIN rail 7.5 high | L = 2 m | 35 x 27 x 7,5 EN 60715 | 98.300.0000.0 | 1 | 35 x 27 x 7.5 EN 60715 | 98.300.0000.0 | 1 |
| Mounting rail 35, DIN rail 15 hoc | L = 2 m | 35 x 24 x 15 EN 60715 | 98.360.0000.0 | 1 | 35 x 24 x 15 EN 60715 | 98.360.0000.0 | 1 |
| Mounting rail 32, G-rail | L = 2 m | 9006 EN 60715 G-32 | 98.190.0000.0 | 1 | 9006 EN 60715 G-32 | 98.190.0000.0 | 1 |
| End clamp, Polyamide | 8 mm wide TS 35 | 9708/2 S 35 | Z5.522.8553.0 | 100 | 9708/2 S 35 | Z5.522.8553.0 | 100 |
| End clamp, Polyamide | 10 mm wide U-Foot | WE 1/U | Z5.523.5753.0 | 100 | WE 1/U | Z5.523.5753.0 | 100 |
| Marker tag holder | | 9003 C/4 | 04.242.1050.0 | 200 | 9003 C/4 | 04.242.1050.0 | 200 |
| Marker tag, unmarked | | 9003 C | 04.241.0651.0 | 500 | 9003 C | 04.241.0651.0 | 500 |
| Marker tag, marked | | 9003 CB | 04.841.0651.0 | 500 | 9003 CB | 04.841.0651.0 | 500 |
| See pages 582–585 for further labelling systems | | | | | | |



Subject to change without further notice

# WEB

Possible areas of application:
- Devices and controllers for consumers electronics
- industrial electronics
- control technology
- data technology

Material:

| | | |
|---|---|---|
| Housing: | PA 6 | UL 94-HB |
| Foot: | PA 66 | UL 94-V2 |
| Cover: | PC | UL 94-HB |

| Dimensions (mm): W x H x D / for PCB | **Size 8**<br>93 x 42 x 96 / for PCB 93 x 89,6 | | | **Size 9**<br>93 x 74 x 96 / for PCB 93/63 x 89,6 | | |
|---|---|---|---|---|---|---|
| **Description** | | Part No. | Box Qty | | Part No. | Box Qty |
| **Empty housings, complete with U-Foot, without PCB** | | 87.080.0053.0 | 10 | | 87.090.0053.0 | 10 |
| (The empty housings are supplied unassembled and without PCBs) | 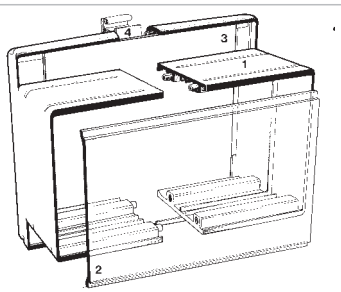 | | | 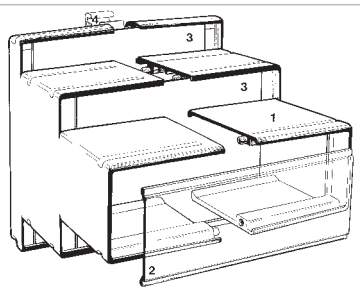 | | |
| **Housing dimensions** | **See page 601** | | | **See page 601** | | |
| | | | | | | |
| **Individual parts** | | | | | | |
| 1. Housing | | 01.001.5453.0 | 50 | | 01.001.5353.0 | 10 |
| Housing | | 01.001.5453.0 | 50 | | 01.001.5353.0 | 10 |
| 2. Cover | | 04.312.3254.0 | 50 | | 04.312.3554.0 | 50 |
| 3. Universal foot | | 05.583.0153.0 | 50 | | 05.583.0153.0 | 50 |
| | | | | | | |
| **Connection technique** | | | | | | |
| PCB terminals with 5 mm pitch | Type 8180, 8181, 8182, 8190, 8191, 8192, 8113, 8142 | | | Type 8180, 8181, 8182, 8190, 8191, 8192, 8113, 8142 | | |
| PCB terminals with 5.08 mm pitch | Type 8213, 8281, 8291, 8292 | | | Type 8213, 8281, 8291, 8292 | | |
| PCB terminals with 7.5 mm pitch | Type 8313, 8390, 8391 | | | Type 8313, 8390, 8391 | | |
| PCB terminals with 7.62 mm pitch | Type 8413, 8491 | | | Type 8413, 8491 | | |
| PCB terminals with 3.5 mm pitch | Type 8543, 8593 | | | Type 8543, 8593 | | |
| PCB terminals with 3.81 mm pitch | Type 8813, 8893 | | | Type 8813, 8893 | | |
| | | | | | | |
| **Technical data** | | | | | | |
| Materials | Ms tin plated | | | Ms tin plated | | |
| Mounting rail: diameter | 1.3 – 1.4 mm | | | 1.3 – 1.4 mm | | |
| Mounting rail: spacing | 5 mm | | | 5 mm | | |
| | | | | | | |
| **Accessories** | | | | | | |
| Flat connector | 6.3 mm, straight | 05.555.8521.0 | 50 | 6.3 mm, straight | 05.555.8521.0 | 50 |
| Flat connector | 6.3 mm, angled | 05.555.8721.0 | 50 | 6.3 mm, angled | 05.555.8721.0 | 50 |
| Flat connector | 2 x 2.8 mm, straight | 05.555.9121.0 | 50 | 2 x 2.8 mm, straight | 05.555.9121.0 | 50 |
| Flat connector | 2 x 2.8 mm, angled | 05.555.8921.0 | 50 | 2 x 2.8 mm, angled | 05.555.8921.0 | 50 |
| Flat connector | 2.8 mm, straight | 05.555.8621.0 | 50 | 2.8 mm, straight | 05.555.8621.0 | 50 |
| Flat connector | 2.8 mm, angled | 05.555.8821.0 | 50 | 2.8 mm, angled | 05.555.8821.0 | 50 |
| | | | | | | |
| Mounting rail 35, DIN rail 7.5 high L = 2 m | 35 x 27 x 7.5 EN 60715 | 98.300.0000.0 | 1 | 35 x 27 x 7.5 EN 60715 | 98.300.0000.0 | 1 |
| Mounting rail 35, DIN rail 15 high L = 2 m | 35 x 24 x 15 EN 60715 | 98.360.0000.0 | 1 | 35 x 24 x 15 EN 60715 | 98.360.0000.0 | 1 |
| Mounting rail 32, G rail L = 2 m | 9006 EN 60715 G-32 | 98.190.0000.0 | 1 | 9006 EN 60715 G-32 | 98.190.0000.0 | 1 |
| End clamp, Polyamide 8 mm wide TS 35 | 9708/2 S 35 | Z5.522.8553.0 | 100 | 9708/2 S 35 | Z5.522.8553.0 | 100 |
| End clamp, Polyamide 10 mm wide U-Foot | WE 1/U | Z5.523.5753.0 | 100 | WE 1/U | Z5.523.5753.0 | 100 |
| Marker tag holder | 9003 C/4 | 04.242.1050.0 | 200 | 9003 C/4 | 04.242.1050.0 | 200 |
| Marker tag, unmarked | 9003 C | 04.241.0651.0 | 500 | 9003 C | 04.241.0651.0 | 500 |
| Marker tag, marked | 9003 CB | 04.841.0651.0 | 500 | 9003 CB | 04.841.0651.0 | 500 |
| | | | | | | |
| See pages 582–585 for further labelling systems | | | | | | |

# Electronic empty housings

# WEB 1001

System benefits
- can be assembled to any length
- possible to have complete custom-made design
- can be assembled together quickly due to the plug-in modular principle
- high torsional rigidity due to the firm interconnection of the individual elements
- can be latched onto all DIN EN mounting rail 32/35 using the universal foot

Material:
Housing: PA 6 GU30 UL 94-HB
Foot: PA 66 UL 94-V2

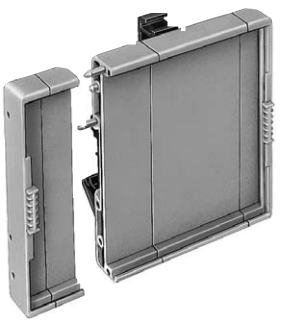

**WEB 1001**

Dimensions (mm): W x H x D — Variable x 96 x 33.5

| Individual parts | Type | Part No. | Box Qty |
|---|---|---|---|
| **1. End cover with label holder** | Width 12.8 mm | 01.001.5593.0 | 50 |
| **1. End cover without label holder** | Width 12.8 mm | 01.001.5993.0 | 50 |
| **2. Middle section of housing** | Width 12.8 mm | 01.001.5853.0 | 50 |
| **3. Middle section of housing** | Width 22.5 mm | 01.001.5653.0 | 50 |
| **4. Middle section of housing** | Width 44.8 mm | 01.001.5753.0 | 50 |
| **5. Universal foot** | Width 23 mm | 05.583.0053.0 | 50 |
| **5. Universal foot** (overall width from 70.4 mm) | Width 68 mm | 05.583.0153.0 | 50 |

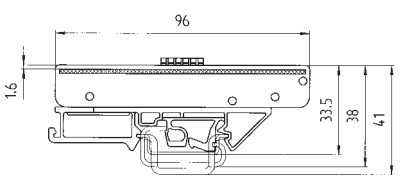


| Accessories | | Type | Part No. | Box Qty |
|---|---|---|---|---|
| Mounting rail 35, DIN rail 7.5 mm high | L = 2 m | 35 x 27 x 7,5 EN 60715 | 98.300.0000.0 | 1 |
| Mounting rail 35, DIN rail 15 mm high | L = 2 m | 35 x 24 x 15 EN 60715 | 98.360.0000.0 | 1 |
| Mounting rail 32, G-rail | L = 2 m | 9006 EN 60715 G-32 | 98.190.0000.0 | 1 |
| PCB (not included) | | see drawing for dimensions | | |
| End clamp, Polyamide | 8 mm wide TS 35 | 9708/2 S 35 | Z5.522.8553.0 | 100 |
| End clamp, Polyamide | 10 mm wide U-Foot | WE 1/U | Z5.523.5753.0 | 100 |
| Marker tag, unmarked | | 9003 C | 04.242.0850.0 | 500 |
| Marker tag, marked | | 9003 CB | 04.842.0850.0 | 500 |

See pages 582–585 for further labelling systems

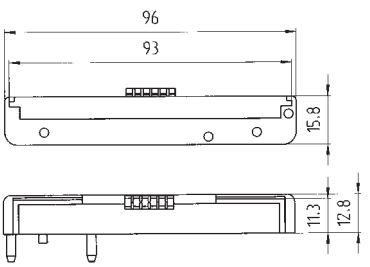


Width 12.8 mm 01.001.5593.0 50

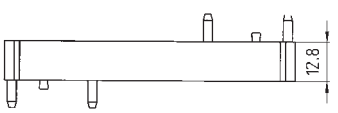


Width 12.8 mm 01.001.5853.0 50

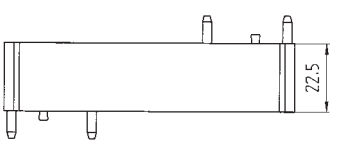


Width 22.5 mm 01.001.5653.0 50

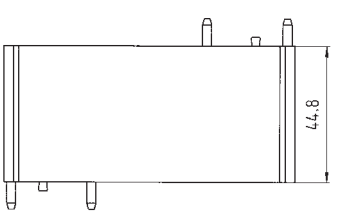


Width 44.8 mm 01.001.5753.0 50

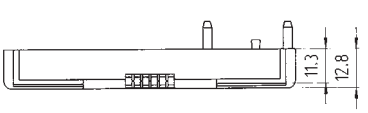


01.001.5593.0 50

Universal foot

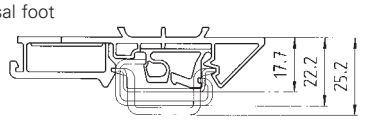


Width 23 mm 05.583.0053.0 50
Width 68 mm 05.583.0153.0 50
(overall width from 70.4 mm)



Subject to change without further notice

# Electronic empty housings

# WEB 1002

System benefits
- can be assembled to any length
- possible to have complete custom-made design
- can be assembled together quickly due to the plug-in modular principle
- high torsional rigidity due to the firm interconnection of the individual elements
- can be latched onto all DIN EN mounting rail 32/35 using the universal foot

Material:
Housing: PA 6 GU30 UL 94-HB
Foot: PA 66 UL 94-V2

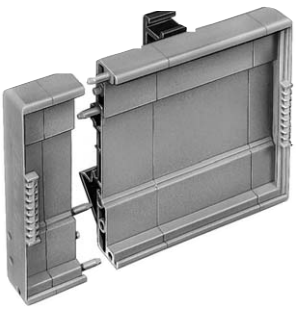

## WEB 1002

Dimensions (mm): W x H x D — Variable x 80 x 33.5

| Individual parts | Type | Part No. | Box Qty |
|---|---|---|---|
| **1. End cover with label holder** | Width 12.8 mm | 01.001.6493.0 | 50 |
| **2. Middle section of housing** | Width 12.8 mm | 01.001.6553.0 | 50 |
| **3. Middle section of housing** | Width 22.5 mm | 01.001.6653.0 | 50 |
| **4. Middle section of housing** | Width 44.8 mm | 01.001.6753.0 | 50 |
| **5. Universal foot** | Width 23 mm | 05.584.8853.0 | 50 |
| **5. Universal foot** (overall width from 70.4 mm) | Width 68 mm | 05.584.8953.0 | 50 |

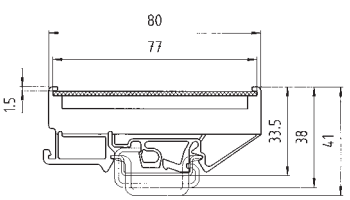


| Accessories | | | | |
|---|---|---|---|---|
| Mounting rail 35, DIN rail 7.5 mm high | L = 2 m | 35 x 27 x 7.5 EN 60715 | 98.300.0000.0 | 1 |
| Mounting rail 35, DIN rail 15 mm high | L = 2 m | 35 x 24 x 15 EN 60715 | 98.360.0000.0 | 1 |
| Mounting rail 32, G-rail | L = 2 m | 9006 EN 60715 G-32 | 98.190.0000.0 | 1 |
| PCB (not included) | | see drawing for dimensions | | |
| End clamp, Polyamide | 8 mm wide TS 35 | 9708/2 S 35 | Z5.522.8553.0 | 100 |
| End clamp, Polyamide | 10 mm wide U-Foot | WE 1/U | Z5.523.5753.0 | 100 |
| Marker tag, unmarked | | 9003 C | 04.242.0850.0 | 500 |
| Marker tag, marked | | 9003 CB | 04.842.0850.0 | 500 |

See pages 582–585 for further labelling systems

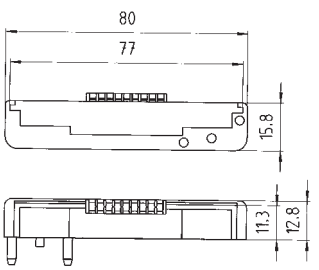


Width 12.8 mm 01.001.6493.0 50

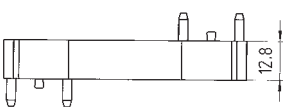


Width 12.8 mm 01.001.6553.0 50

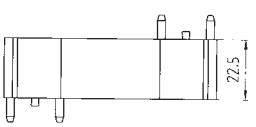


Width 22.5 mm 01.001.6653.0 50

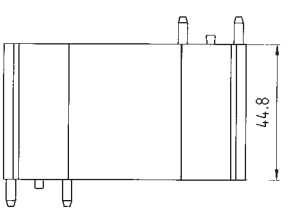


Width 44.8 mm 01.001.6753.0 50

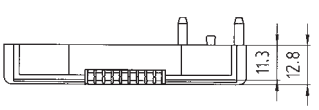


01.001.6493.0 50

Universal foot

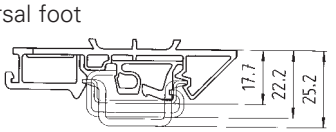


Width 23 mm 05.584.8853.0 50
Width 68 mm 05.584.8953.0 50
(overall width from 70.4 mm)



Subject to change without further notice

# WEB 1002

## with integrated U-foot

System benefits
- can be assembled to any length
- possible to have complete custom-made design
- can be assembled together quickly due to the plug-in modular principle
- high torsional rigidity due to the firm interconnection of the individual elements
- can be latched onto all DIN EN mounting rail 32/35 using the universal foot

Material:
Housing: PA 6 GU30 UL 94-HB
Foot: PA 66 UL 94-V2

**WEB 1002 with integrated U-Foot**
Variable x 80 x 33.5

Dimensions (mm): W x H x D

| Individual parts | Type | Part No. | Box Qty |
|---|---|---|---|
| **1. End cover with integrated U-foot** | Width 11 mm | 01.001.6293.0 | 50 |
| **2. Middle section with integrated U-foot** | Width 10 mm | 01.001.6553.0 | 50 |
| **3. End plate** | Width 1 mm | 07.310.9653.0 | 50 |

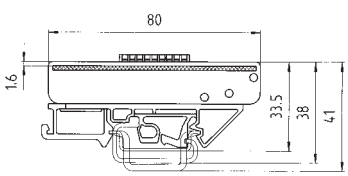


| **Accessories** | | | | |
|---|---|---|---|---|
| Mounting rail 35, DIN rail 7.5 mm high | L = 2 m | 35 x 27 x 7,5 EN 60715 | 98.300.0000.0 | 1 |
| Mounting rail 35, DIN rail 15 mm high | L = 2 m | 35 x 24 x 15 EN 60715 | 98.360.0000.0 | 1 |
| Mounting rail 32, G-rail | L = 2 m | 9006 EN 60715 G-32 | 98.190.0000.0 | 1 |
| PCB (not included) | | see drawing for dimensions | | |
| End clamp, Polyamide | 8 mm wide TS 35 | 9708/2 S 35 | Z5.522.8553.0 | 100 |
| End clamp, Polyamide | 10 mm wide U-Foot | WE 1/U | Z5.523.5753.0 | 100 |
| Marker tag, unmarked | | 9003 C | 04.242.0850.0 | 500 |
| Marker tag, marked | | 9003 CB | 04.842.0850.0 | 500 |

See pages 582–585 for further labelling systems

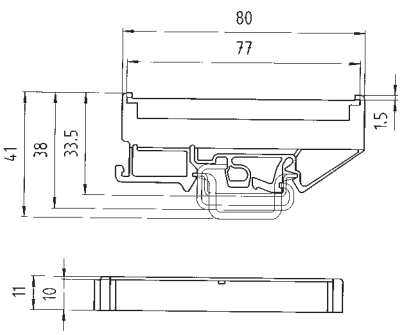


Width 11 mm 01.001.6293.0 50

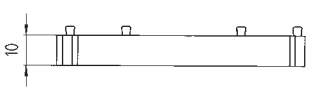


Width 10 mm 01.001.6553.0 50

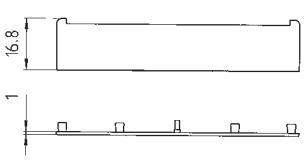


Width 1 mm 07.310.9653.0 50

electronics

# Electronic empty housings

WEG

System benefits
- closed housing available in four different sizes
- parallel connection of the modules in various lengths possible via the latchable U-foot
- compact housing made from high quality material
- UL 94-V-0 polyamide 66/6

| | | |
|---|---|---|
| UL-Data | No. 22–10 AWG/600 V | No. 22–10 AWG/600 V |
| CSA-Data | No. 20–10 AWG | No. 20–10 AWG |
| Approvals | UL | UL |
| Dimensions (mm): W x H x D | 20 x 60.6 x 63 | 16.5 x 60.6 x 90.5 |

| Description | | Part No. | Box Qty | | | |
|---|---|---|---|---|---|---|
| **Empty housing, complete with U-Foot, without PCB** | | 57.801.0053.0 | 10 | | 57.801.5053.0 | 10 |
| | 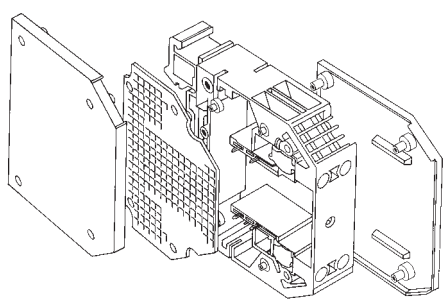 | | | 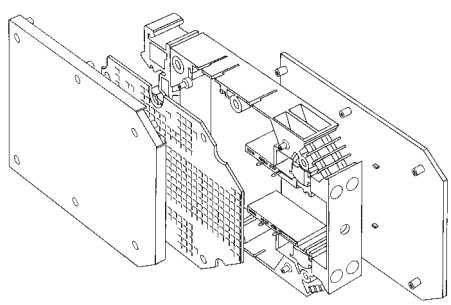 | | |
| **Housing dimensions, PCB dimensions** | **See page 602** | | | **See page 602** | | |
| **Technical data** | | | | | | |
| Rated cross-section | 4 mm² | | | 4 mm² | | |
| Wire range single core | 0.14–6 mm² (EN 60 947-7-1 / DIN VDE 0611 T1) | | | 0.14–6 mm² (EN 60 947-7-1 / DIN VDE 0611 T1) | | |
| Wire range finely stranded | 0.14–4 mm² (EN 60 947-7-1 / DIN VDE 0611 T1) | | | 0.14–4 mm² (EN 60 947-7-1 / DIN VDE 0611 T1) | | |
| Rated voltage | 400 V/4 kV/3 | | | 400 V/4 kV/3 | | |
| Rated current | max. 10 A | | | max. 10 A | | |
| Type of protection | IP 20 | | | IP 20 | | |
| Insulation strip length | 7 mm | | | 7 mm | | |
| Regulations, norms | DIN VDE 0611 Part 1 (11.77) | | | DIN VDE 0611 Part 1 (11.77) | | |
| | EN 60947-7-1: 1991/DIN VDE 0611 T1/08.92 | | | EN 60947-7-1: 1991/DIN VDE 0611 T1/08.92 | | |
| **Accessories** | | | | | | |
| Mounting rail 35, DIN rail 7.5 mm high L = 2 m | 35 x 27 x 7,5 EN 60715 | 98.300.0000.0 | 1 | 35 x 27 x 7,5 EN 60715 | 98.300.0000.0 | 1 |
| Mounting rail 35, DIN rail 15 mm high L = 2 m | 35 x 24 x 15 EN 60715 | 98.360.0000.0 | 1 | 35 x 24 x 15 EN 60715 | 98.360.0000.0 | 1 |
| Mounting rail 32, G-rail L = 2 m | 9006 EN 60715 G-32 | 98.190.0000.0 | 1 | 9006 EN 60715 G-32 | 98.190.0000.0 | 1 |
| PCB (see drawing for dimensions) (hole grid) | | Z8.000.0123.1 | 10 | | | |
| End clamp, Polyamide 8 mm wide TS 35 | 9708/2 S 35 | Z5.522.8553.0 | 100 | 9708/2 S 35 | Z5.522.8553.0 | 100 |
| End clamp, Polyamide 10 mm wide U-Foot | WE 1/U | Z5.523.5753.0 | 100 | WE 1/U | Z5.523.5753.0 | 100 |
| Marker tag, unmarked | 9003 C | 04.242.0651.0 | 500 | 9003 C | 04.241.0651.0 | 500 |
| Marker tag, marked | 9003 CB | 04.842.0651.0 | 500 | 9003 CB | 04.841.0651.0 | 500 |
| See pages 582–585 for further labelling systems | | | | | | |



Subject to change without further notice

# WEG

System benefits
- closed housing available in four different sizes
- parallel connection of the modules in various lengths possible via the latchable U-foot
- Compact housing made from high quality material
- UL 94-V-0 polyamide 66/6

| | | |
|---|---|---|
| UL-Data | No. 22-10 AWG/600 V | No. 22–10 AWG/600 V |
| CSA-Data | No. 20-10 AWG | No. 20–10 AWG |
| Approvals | UL | UL |
| Dimensions (mm): W x H x D | 22.5 x 60.6 x 90.5 | 28.5 x 60.6 x 90.5 |

| Description | Part No. | Box Qty | Part No. | Box Qty |
|---|---|---|---|---|
| **Empty housings, complete with U-Foot, without PCB** | 57.801.5153.0 | 10 | 57.801.5253.0 | 10 |
| | 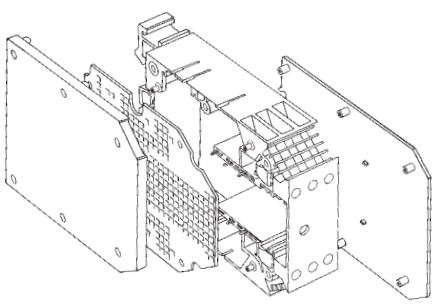 | | 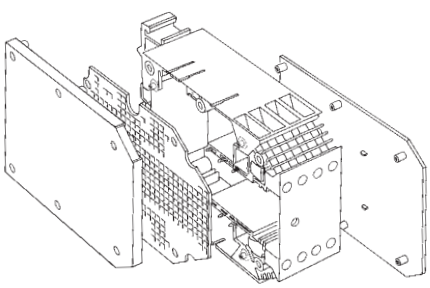 | |
| **Housing dimensions, PCB dimensions** | **See page 602** | | **See page 602** | |
| **Technical data** | | | | |
| Rated cross-section | 4 mm² | | 4 mm² | |
| Wire range single core | 0.14–6 mm² (EN 60 947-7-1 / DIN VDE 0611 T1) | | 0.14–6 mm² (EN 60 947-7-1 / DIN VDE 0611 T1) | |
| Wire range finely stranded | 0.14–4 mm² (EN 60 947-7-1 / DIN VDE 0611 T1) | | 0.14–4 mm² (EN 60 947-7-1 / DIN VDE 0611 T1) | |
| Rated voltage | 400 V/4 kV/3 | | 400 V/4 kV/3 | |
| Rated current | max. 10 A | | max. 10 A | |
| Type of protection | IP 20 | | IP 20 | |
| Insulation strip length | 7 mm | | 7 mm | |
| Regulations, norms | DIN VDE 0611 Part 1 (11.77) | | DIN VDE 0611 Part 1 (11.77) | |
| | EN 60947-7-1: 1991/DIN VDE 0611 T1/08.92 | | EN 60947-7-1: 1991/DIN VDE 0611 T1/08.92 | |
| **Accessories** | | | | |
| Mounting rail 35, DIN rail 7.5 mm high L = 2 m | 35 x 27 x 7,5 EN 60715 | 98.300.0000.0 1 | 35 x 27 x 7,5 EN 60715 | 98.300.0000.0 1 |
| Mounting rail 35, DIN rail 15 mm high L = 2 m | 35 x 24 x 15 EN 60715 | 98.360.0000.0 1 | 35 x 24 x 15 EN 60715 | 98.360.0000.0 1 |
| Mounting rail 32, G-rail L = 2 m | 9006 EN 60715 G-32 | 98.190.0000.0 1 | 9006 EN 60715 G-32 | 98.190.0000.0 1 |
| End clamp, Polyamide 8 mm wide TS 35 | 9708/2 S 35 | Z5.522.8553.0 100 | 9708/2 S 35 | Z5.522.8553.0 100 |
| End clamp, Polyamide 10 mm wide U-Foot | WE 1/U | Z5.523.5753.0 100 | WE 1/U | Z5.523.5753.0 100 |
| Marker tag, unmarked | 9003 C | 04.241.0651.0 500 | 9003 C | 04.241.0651.0 500 |
| Marker tag, marked | 9003 CB | 04.841.0651.0 500 | 9003 CB | 04.841.0651.0 500 |
| See pages 582–585 for further labelling systems | | | | |

electronics

# Electronic empty housings

wieBox

System benefits
- housing design in twin shell technology
- housing with or without ventilation slots
- installation of the 2 pole supply terminal in the 19mm housing
- 8 poles possible
- solid or removable front panels

| | | |
|---|---|---|
| UL-Data | No. 22-12 AWG 300 V UG: B, D 20 A/30 A | No. 22-12 AWG 300 V UG: B, D 20 A/30 A |
| CSA-Data | No. 22-12 AWG 300 V Gr. B 25 A | No. 22-12 AWG 300 V Gr. B 25 A |
| Approvals | UL, CSA | UL, CSA |
| Overall width (mm): W x H x D | width 19 x 75 x 110.8 | width 22.5 x 75 x 110,8 |

| **Individual parts** | Type | Part No. | Box Qty | Type | Part No. | Box Qty |
|---|---|---|---|---|---|---|
| Housing base, general with contour, without PCB | | | | | | |
| 1. **Housing base, with mounting foot, with ventilation slots** | wieBox CN 19 GKL | Z1.296.3453.0 | 25 | wieBox CN 22 GKL | Z1.296.3853.0 | 25 |
| 2. **Housing base, with mounting foot, without ventilation slots** | wieBox CN 19 GK | Z1.296.3553.0 | 25 | wieBox CN 22 GK | Z1.296.3953.0 | 25 |
| 3. **Lid, without integral front panel, with contour** | wieBox CN DK | 07.416.5153.0 | 25 | wieBox CN DK | 07.416.5153.0 | 25 |
| 4. **Lid, without integral front panel, without contour** | wieBox CN DU | 07.416.5253.0 | 25 | wieBox CN DU | 07.416.5253.0 | 25 |
| 5. **Lid, with integral front panel, without contour** | wieBox CN 19 DK | 07.416.5353.0 | 25 | wieBox CN 22 DK | 07.416.5653.0 | 25 |
| 6. **Lid, without integral front panel, without contour** | wieBox CN 19 DU | 07.416.5453.0 | 25 | wieBox CN 22 DU | 07.416.5753.0 | 25 |
| 7. **Front panel, transparent** | wieBox CN 19 FKG | 07.416.4856.0 | 50 | wieBox CN 22 FKG | 07.416.4956.0 | 50 |
| 8. **Front panel, gray** | wieBox CN 19 FK | 07.416.4853.0 | 50 | wieBox CN 22 FK | 07.416.4953.0 | 50 |
| | 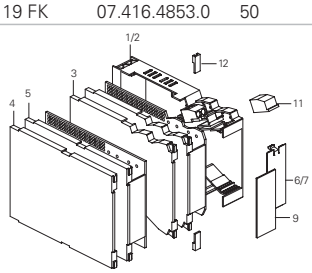  | | | 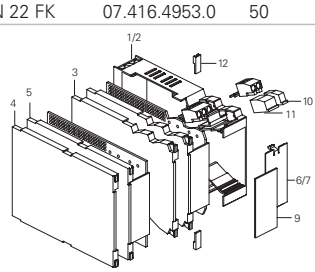  | | |
| **Housing dimensions, PCB dimensions** | **See page 603** | | | **See page 603** | | |
| **Technical data** | | | | | | |
| Rated cross-section | 2.5 mm² | | | 2.5 mm² | | |
| Wire range single core/finely stranded | 0.14 – 4 mm²/0.14 – 2.5 mm² | | | 0.14 – 4 mm² / 0.14 – 2.5 mm² | | |
| Insulation strip length | 6.5 mm | | | 6.5 mm | | |
| Rated voltage: 5mm pitch | 250 V/4 kV/3 – overvoltage category III | | | 250 V/4 kV/3 – overvoltage category III | | |
| (in accordance with VDE 0110/01.89) | 690 V/4 kV/2 – overvoltage category II (max. 600 V for | | | 690 V/4 kV/2 – overvoltage category II (max. 600 V for | | |
| | for non-earthed systems or expected ≤4 kV) | | | systems or expected ≤ 4 kV) | | |
| | 1000 V/4 kV/1 – overvoltage category I | | | 1000 V/4 kV/1 – overvoltage category I | | |
| Rated current | 16 A | | | 16 A | | |
| Regulations, norms | DIN EN 50178 (VDE 0160), DIN EN 699-1 (VDE 0609 T.1) | | | DIN EN 50178 (VDE 0160), DIN EN 699-1 (VDE 0609 T.1) | | |
| Housing material: Complete housing | PA 66/6 gray, similar to RAL 7032 | | | PA 66/6 gray, similar to RAL 7032 | | |
| Front panel, transparent | PC 940 A | | | PC 940 A | | |
| Mounting foot | PA 66/6 black | | | PA 66/6 black | | |
| Flammability | UL94-V0 | | | UL94-V0 | | |
| Type of protection | IP 40 | | | IP 40 | | |
| Material of PCB terminal: Terminal screw | Galvanised steel | | | Galvanised steel | | |
| Insulation component | PA 66/6 gray, similar to RAL 7032, UL94-V0 | | | PA 66/6 gray, similar to RAL 7032, UL94-V0 | | |
| Clamping parts | Brass with nickel plating | | | Brass with nickel plating | | |
| Contact bridge with soldering parts | Tin plated copper | | | Tin plated copper | | |
| Soldering pin/bore hole | 0.9 x 0.9 mm / Ø 1.3 mm | | | 0.9 x 0.9 mm / Ø 1.3 mm | | |
| **Accessories** | | | | | | |
| 9. Snap-in plate, gray | wieBox CN 19 EP | 07.416.4553.0 | 50 | wieBox CN 22 EP | 07.416.4653.0 | 50 |
| 10. Blanking plate, 1 pole | wieBox CN BL 1 | 05.561.9553.0 | 100 | wieBox CN BL 1 | 05.561.9553.0 | 100 |
| 11. Blanking plate, 2 pole | wieBox CN BL 2 | 05.561.9653.0 | 100 | wieBox CN BL 2 | 05.561.9653.0 | 100 |
| 12. Marker tag | wieBox CN BZ | 04.244.1853.0 | 100 | wieBox CN BZ | 04.244.1853.0 | 100 |
| PCB terminal, right | 8191/2- pole WVR OB | 25.161.2553.0 | 100 | 8191/3- pole WVR OB | 25.161.2653.0 | 100 |
| PCB terminal, left | 8191/2- pole WVL OB | 25.161.2853.0 | 100 | 8191/3- pole WVL OB | 25.161.2953.0 | 100 |
| Mounting rail 35, DIN rail 7,5 mm high L = 2 m | 35 x 27 x 7.5 EN 60715 | 98.300.0000.0 | 1 | 35 x 27 x 7.5 EN 60715 | 98.300.0000.0 | 1 |
| Mounting rail 35, DIN rail 15 mm high L = 2 m | 9708/2 S 35 | Z5.522.8553.0 | 100 | 9708/2 S 35 | Z5.522.8553.0 | 100 |
| End clamp, Polyamide, for TS 35 8 mm wide | WE 1/U | Z5.523.5753.0 | 100 | WE 1/U | Z5.523.5753.0 | 100 |
| End clamp, Polyamide, for U-Foot 10 mm wide | | | | | | |
| See pages 582-583 for further labelling systems | | | | | | |



Subject to change without further notice

# wieBox

System benefits
- housing design in twin shell technology
- housing with or without ventilation slots
- installation of the 2 pole supply terminal in the 19mm housing
- 8 poles possible
- with front plates for insertion or latching into position

Approvals: No. 22-12 AWG 300 V UG: B, D 20 A/30 A
No. 22-12 AWG 300 V Gr. B 25 A
UL, CSA
Overall width (mm) : B x H x T width 26 x 75 x 110.8

| Description | Type | Part No. | Box Qty |
|---|---|---|---|
| Housing base, general with contour, without PCB | | | |
| 1. **Housing base, with mounting foot, with ventilation slots** | wieBox CN 26 GKL | Z1.296.4253.0 | 25 |
| 2. **Housing base, with mounting foot, without ventilation slots** | wieBox CN 26 GK | Z1.296.4353.0 | 25 |
| 3. **Lid, without integral front panel, with contour** | wieBox CN DK | 07.416.5153.0 | 25 |
| 4. **Lid, without integral front panel, without contour** | wieBox CN DU | 07.416.5253.0 | 25 |
| 5. **Lid, with integral front panel, without contour** | wieBox CN 26 DK | 07.416.5853.0 | 25 |
| 6. **Lid, without integral front panel, without contour** | wieBox CN 26 DU | 07.416.5953.0 | 25 |
| 7. **Front panel, transparent** | wieBox CN 26 FKG | 07.416.5056.0 | 50 |
| 8. **Front panel, gray** | wieBox CN 26 FK | 07.416.5053.0 | 50 |
| | 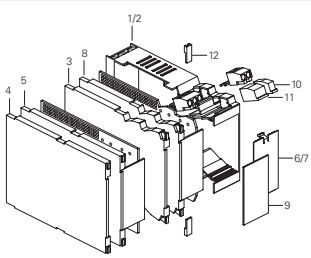 | | |
| **Housing dimensions, PCB dimensions** | **See page 589** | | |
| **Technical data** | | | |
| Rated cross-section | 2,5 mm² | | |
| Wire range single core/finely stranded | 0,14 – 4 mm²/0,14 – 2,5 mm² | | |
| Insulation strip length | 6,5 mm | | |
| Rated voltage: 5mm pitch | 250 V/4 kV/3 – overvoltage category III | | |
| (in accordance with VDE 0110/01.89) | 690 V/4 kV/2 – overvoltage category II (max. 600V for | | |
| | for non-earthed systems or expected ≤ 4 kV) | | |
| | 1000 V/4 kV/1 – overvoltage category I | | |
| Rated current | 16 A | | |
| Regulations, norms | DIN EN 50178 (VDE 0160), DIN EN 699-1 (VDE 0609 T.1) | | |
| Housing material: Complete housing | PA 6.6 gray, similar to RAL 7032 | | |
| Front panel, transparent | PC 940 A | | |
| Mounting foot | PA 6.6 black | | |
| Flammability | UL94-V0 | | |
| Type of protection | IP 40 | | |
| Material of PCB terminal: Terminal screw | Galvanised steel | | |
| Insulation component | PA 6.6 gray, similar to RAL 7032, UL94-V0 | | |
| Clamping parts | Brass with nickel plating | | |
| Contact bridge with soldering parts | Tin plated copper | | |
| Soldering pin/bore hole | 0,9 x 0,9 mm/Ø 1,3 mm | | |
| **Accessories** | Type | Part No. | Box Qty |
| 9. Snap-in plate, gray | wieBox CN 26 EP | 07.416.4753.0 | 50 |
| 10. Blanking plate, 1 pole | wieBox CN BL 1 | 05.561.9553.0 | 100 |
| 11. Blanking plate, 2 pole | wieBox CN BL 2 | 05.561.9653.0 | 100 |
| 12. Marker tag | wieBox CN BZ | 04.244.1853.0 | 100 |
| PCB terminal, right | 8191/3- pole WVR OB | 25.161.2653.0 | 100 |
| PCB terminal, left | 8191/3- pole WVL OB | 25.161.2953.0 | 100 |
| Mounting rail 35, DIN rail 7,5 mm high L = 2m | 35 x 27 x 7,5 EN 60715 | 98.300.0000.0 | 1 |
| Mounting rail 35, DIN rail 15 mm high L = 2m | 35 x 24 x 15 EN 60715 | 98.360.0000.0 | 1 |
| End clamp, Polyamide, for TS 35 8 mm wide | 9708/2 S 35 | Z5.522.8553.0 | 100 |
| End clamp, Polyamide, for U-Foot 10 mm wide | WE 1/U | Z5.523.5753.0 | 100 |
| See pages 582–585 for further labelling systems | | | |

# Electronic empty housings
# Marking material
# Labelling System

Terminal markings, snap-in
Housing markings, snap-in
Marker tags with multiple digits
Individual marker, marker strips, marker branch
Individual labelling possible (numbers, symbols)

| Description | Type | Part No. | Box Qty | Type | Part No. | Box Qty |
|---|---|---|---|---|---|---|
| Individual marker, without inscription | 3 digit, 9705 A | 04.242.0850.0 | 500 | 8 digit, 9705 AL | 04.242.1553.0 | 500 |
| Individual marker, with inscription | 3 digit, 9705 AB | 04.842.0850.0 | 500 | 8 digit, 9705 ALB | 04.842.1553.0 | 500 |
| (specify marking required in addition to part number) | | | | | | |
| **Marker strips with 5mm pitch:** | | | | | | |
| Marker strips, unmarked | 9705 A/5/10 | 04.242.5053.0 | 25 | | | |
| Marker strips, unmarked, with enlarged text area | 9705 AL/5/10 | 04.242.5153.0 | 25 | | | |
| Marker strips, marked (specify marker required in addition to Part no.) | 9705 A/5/10 B | 04.842.5053.0 | 25 | | | |
| Marker strips, marked (marking for strips: 1...9) | 9705 A/5/9 B | 04.842.4953.0 | 25 | | | |
| **Note:** Pack unit = 25 strips = 250 tags | | | | | | |
| **Marker strips with 10 mm pitch:** | | | | | | |
| Marker strips, marked (as above, but only every other tag is printed) | 9705 A/5/10/5 B | 04.842.5553.0 | 25 | | | |
| **Note:** Pack unit = 25 strips = 250 tags | | | | | | |
| **Marker tag holder** for WEB-Empty housings | | 04.242.1050.0 | 200 | | | |
| | | | | | | |
| **Technical data** | | | | | | |
| Materials | Polyamide 66/6 | | | | | |
| Colour | Black numbers on white background | | | | | |



Subject to change without further notice

# Electronic empty housings
# Marking branch with 10 marker tags

## Labelling System

Snap-in terminal and housing markings
Marker tags with multiple digits
Individual marker, marker strips, marker branch
Individual labelling possible (numbers, symbols)

**Materials:**
**Polyamide 66/6 white, black printing**

| **Unmarked** | | Type | Part No. | Box Qty |
|---|---|---|---|---|
| | | 9704 A | 04.241.1150.0 | 25 |
| **with row of same numbers** | **marked, per branch** | | | |
| | 1 1 1 1 1 1 1 1 1 1 | 9704 A/1 B | 04.841.1150.0 | 25 |
| | 2 2 2 2 2 2 2 2 2 2 | 9704 A/2 B | 04.841.1250.0 | 25 |
| | 3 3 3 3 3 3 3 3 3 3 | 9704 A/3 B | 04.841.1350.0 | 25 |
| | 4 4 4 4 4 4 4 4 4 4 | 9704 A/4 B | 04.841.1450.0 | 25 |
| | 5 5 5 5 5 5 5 5 5 5 | 9704 A/5 B | 04.841.1550.0 | 25 |
| | 6 6 6 6 6 6 6 6 6 6 | 9704 A/6 B | 04.841.1650.0 | 25 |
| | 7 7 7 7 7 7 7 7 7 7 | 9704 A/7 B | 04.841.1750.0 | 25 |
| | 8 8 8 8 8 8 8 8 8 8 | 9704 A/8 B | 04.841.1850.0 | 25 |
| | 9 9 9 9 9 9 9 9 9 9 | 9704 A/9 B | 04.841.1950.0 | 25 |
| | 0 0 0 0 0 0 0 0 0 0 | 9704 A/0 B | 04.841.2050.0 | 25 |
| 1 set of same numbers = 10 x 25 branches = 2500 numbers | | | | |
| **with numbers in sequence** | **marked, per branch** | | | |
| 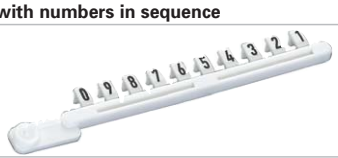 | 1 2 3 4 5 6 7 8 9 0 | 9704 A/1-0 B | 04.841.2150.0 | 25 |
| **with row of same letters in upper case** | **marked, per branch** | | | |
| | A A A A A A A A A A | 9704 A/AG B | 04.841.2250.0 | 25 |
| | B B B B B B B B B B | 9704 A/BG B | 04.841.2350.0 | 25 |
| | C C C C C C C C C C | 9704 A/CG B | 04.841.2450.0 | 25 |
| | D D D D D D D D D D | 9704 A/DG B | 04.841.2550.0 | 25 |
| | E E E E E E E E E E | 9704 A/EG B | 04.841.2650.0 | 25 |
| | F F F F F F F F F F | 9704 A/FG B | 04.841.2750.0 | 25 |
| | G G G G G G G G G G | 9704 A/GG B | 04.841.2850.0 | 25 |
| | H H H H H H H H H H | 9704 A/HG B | 04.841.2950.0 | 25 |
| | I I I I I I I I I I | 9704 A/IG B | 04.841.3050.0 | 25 |
| | J J J J J J J J J J | 9704 A/JG B | 04.841.3150.0 | 25 |
| | K K K K K K K K K K | 9704 A/KG B | 04.841.3250.0 | 25 |
| | L L L L L L L L L L | 9704 A/LG B | 04.841.3350.0 | 25 |
| | M M M M M M M M M M | 9704 A/MG B | 04.841.3450.0 | 25 |
| | N N N N N N N N N N | 9704 A/NG B | 04.841.3550.0 | 25 |
| | O O O O O O O O O O | 9704 A/OG B | 04.841.3650.0 | 25 |
| | P P P P P P P P P P | 9704 A/PG B | 04.841.3750.0 | 25 |
| | Q Q Q Q Q Q Q Q Q Q | 9704 A/QG B | 04.841.3850.0 | 25 |
| | R R R R R R R R R R | 9704 A/RG B | 04.841.3950.0 | 25 |
| | S S S S S S S S S S | 9704 A/SG B | 04.841.4050.0 | 25 |
| | T T T T T T T T T T | 9704 A/TG B | 04.841.4150.0 | 25 |
| | U U U U U U U U U U | 9704 A/UG B | 04.841.4250.0 | 25 |
| | V V V V V V V V V V | 9704 A/VG B | 04.841.4350.0 | 25 |
| | W W W W W W W W W W | 9704 A/WG B | 04.841.4450.0 | 25 |
| | X X X X X X X X X X | 9704 A/XG B | 04.841.4550.0 | 25 |
| | Y Y Y Y Y Y Y Y Y Y | 9704 A/YG B | 04.841.4650.0 | 25 |
| 1 set of upper case letters = 26 x 25 branches = 6500 letters | Z Z Z Z Z Z Z Z Z | 9704 A/ZG B | 04.841.4750.0 | 2 |



Subject to change without further notice

# Labelling System

Snap-in terminal and housing markings
Marker tags with multiple digits
Individual marker, marker strips, marker branch
Individual labelling possible (numbers, symbols)

| | | Type | Part No. | Box Qty |
|---|---|---|---|---|
| **with row of same symbols** | **marked, per branch** | | | |
| | + + + + + + + + + + | 9704 A/+B | 04.841.7450.0 | 25 |
| | – – – – – – – – – – | 9704 A/-B | 04.841.7550.0 | 25 |
| | / / / / / / / / / / | 9704 A//B | 04.841.7650.0 | 25 |
| | . . . . . . . . . . | 9704 A/.B | 04.841.750.0 | 25 |
| 1 set of same symbols = 10 x 25 branches = 2500 characters | | | | |
| **with row of same letters in lower case** | **marked, per branch** | | | |
| | a a a a a a a a a a | 9704 A/AK B | 04.841.4850.0 | 25 |
| | b b b b b b b b b b | 9704 A/BK B | 04.841.4950.0 | 25 |
| | c c c c c c c c c c | 9704 A/CK B | 04.841.5050.0 | 25 |
| | d d d d d d d d d d | 9704 A/DK B | 04.841.5150.0 | 25 |
| | e e e e e e e e e e | 9704 A/EK B | 04.841.5250.0 | 25 |
| | f f f f f f f f f f | 9704 A/FK B | 04.841.5350.0 | 25 |
| | g g g g g g g g g g | 9704 A/GK B | 04.841.5450.0 | 25 |
| | h h h h h h h h h h | 9704 A/HK B | 04.841.5550.0 | 25 |
| | i i i i i i i i i i | 9704 A/IK B | 04.841.5650.0 | 25 |
| | j j j j j j j j j j | 9704 A/JK B | 04.841.6750.0 | 25 |
| | k k k k k k k k k k | 9704 A/KK B | 04.841.6850.0 | 25 |
| | l l l l l l l l l l | 9704 A/LK B | 04.841.6950.0 | 25 |
| | m m m m m m m m m m | 9704 A/MK B | 04.841.6050.0 | 25 |
| | n n n n n n n n n n | 9704 A/NK B | 04.841.6150.0 | 25 |
| | o o o o o o o o o o | 9704 A/OK B | 04.841.6250.0 | 25 |
| | p p p p p p p p p p | 9704 A/PK B | 04.841.6350.0 | 25 |
| | q q q q q q q q q q | 9704 A/QK B | 04.841.6450.0 | 25 |
| | r r r r r r r r r r | 9704 A/RK B | 04.841.6550.0 | 25 |
| | s s s s s s s s s s | 9704 A/SK B | 04.841.6650.0 | 25 |
| | t t t t t t t t t t | 9704 A/TK B | 04.841.6750.0 | 25 |
| | u u u u u u u u u u | 9704 A/UK B | 04.841.6850.0 | 25 |
| | v v v v v v v v v v | 9704 A/VK B | 04.841.6950.0 | 25 |
| | w w w w w w w w w w | 9704 A/WK B | 04.841.7050.0 | 25 |
| | x x x x x x x x x x | 9704 A/XK B | 04.841.7150.0 | 25 |
| | y y y y y y y y y y | 9704 A/YK B | 04.841.7250.0 | 25 |
| 1 set of lower case letters = 26 x 25 branches = 6500 letters | z z z z z z z z z z | 9704 A/ZK B | 04.841.7350.0 | 25 |

electronics

# Electronic empty housings

dipos

## Plan view

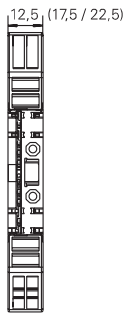


## Housing

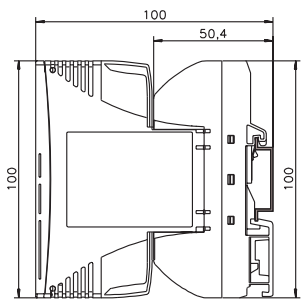


## Module board

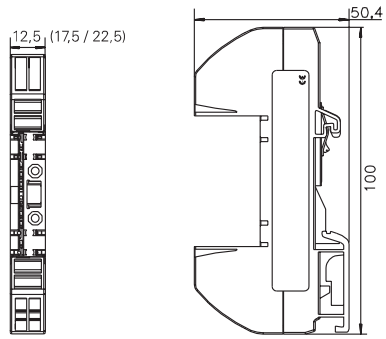


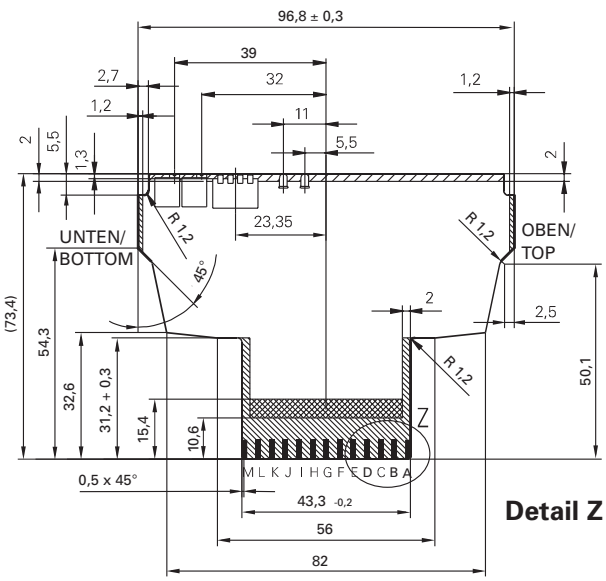


**Detail Z**

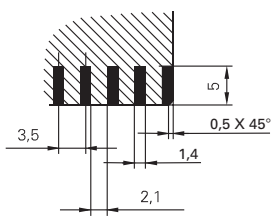


| Version (mm width) | 12.5 | 17.5 | 22.5 |
|---|---|---|---|
| Component height<br>Endurance | 7.15<br>2.35 | 10.35<br>4.15 | 15.35<br>4.15 |
| Max.component height<br>Max.endurance | 6.25<br>1.4 | 8.7<br>2.7 | 13.7<br>2.7 |
| Max.component height | 1.05 | 0.95 | 5.95 |
| Blocking zones | | | |

**Note:** Contact is made on both sides of the terminal faces. Components that generate heat should always be placed in the vicinity of the ventilation slots (upper section of the PCB)

PCB: FR4

Thickness: 1.0 mm

Copper support: ≥ 35 µm (I ≤ 3 A)

≥ 70 µm (I > 3 A)



Subject to change without further notice

# WEB

### Dimensions for WEB empty housing for sizes 1, 3, 6 and 8 with foot TS 35

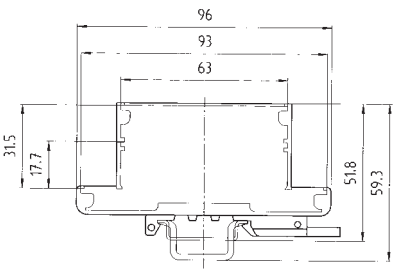


### Dimensions for WEB empty housing for sizes 1, 3, 6 and 8 with universal foot

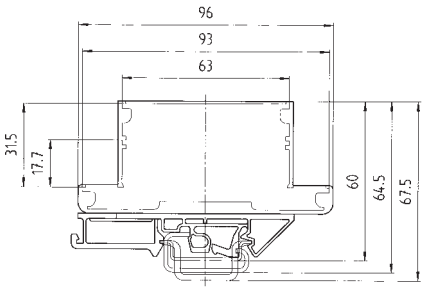


### Dimensions of universal foot

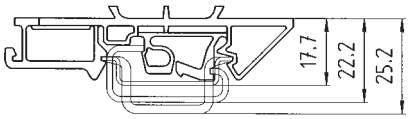


### Dimensions for WEB empty housing for sizes 2, 4, 7 and 9 with foot TS 35

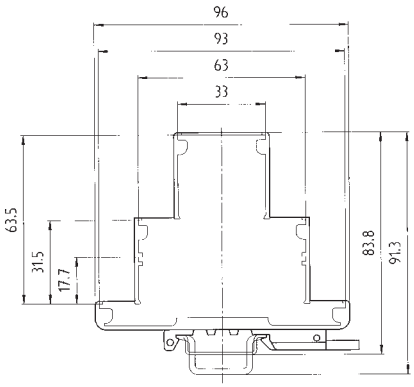


### Dimensions for WEB empty housing for sizes 2, 4, 7 and 9 with universal foot

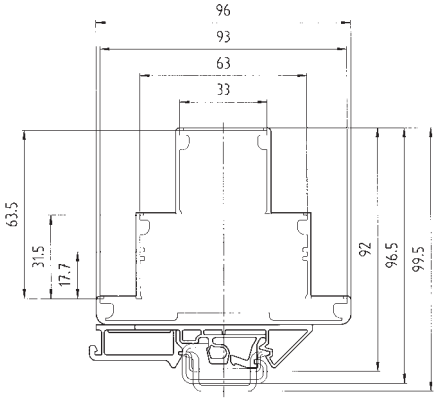


electronics

# Electronic empty housings

**Dimensions of *WEG***
**overall width: 20 mm**

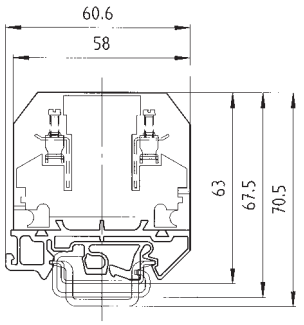


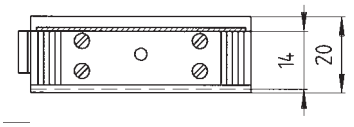


**Dimensions of *WEG***
**overall width: 16.5 mm**
**overall width: 22.5 mm**
**overall width: 28.5 mm**

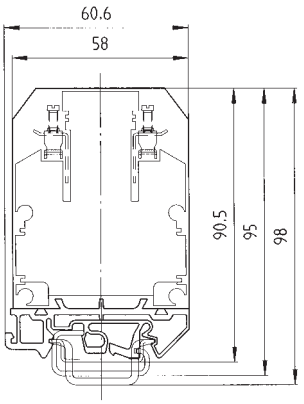


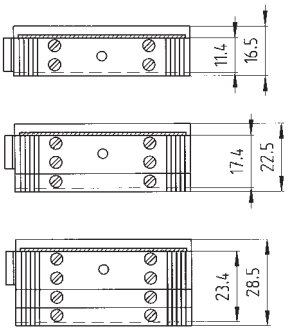


**Dimensions of *WEG***
**PCB sizes**

Overall depth: 63 mm

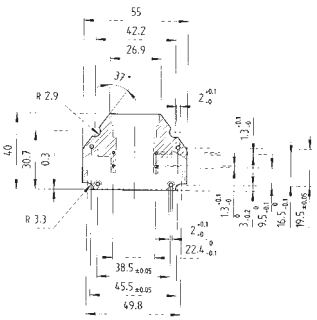


Overall depth: 90.5 mm

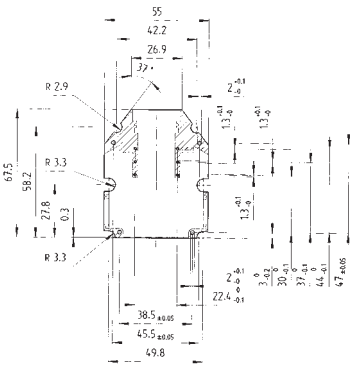




Subject to change without further notice

# wieBox

## Dimension of *wieBox* housing

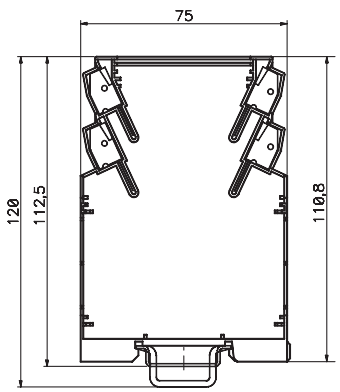


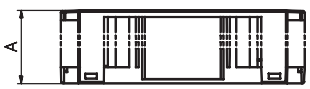


### Drawing dimensions

| | Dim A | Dim B | Dim C | Dim D |
|---|---|---|---|---|
| CN 19 | 19 | 17 | 18 | 18 |
| CN 22 | 22.5 | 20.5 | 21.5 | 21.5 |
| CN 26 | 26 | 24 | 25 | 25 |

### (3/4) Lid

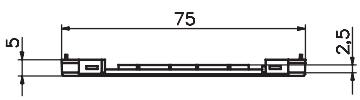


### (5/8) Lid

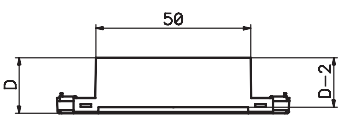


### (6/7) Front flap

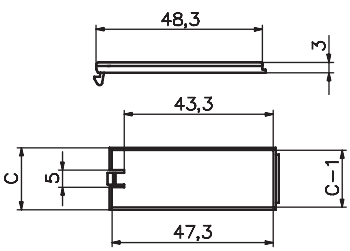


### (9) Snap-in plate

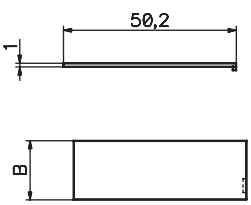


## Dimensions of *wieBOX* PCB size

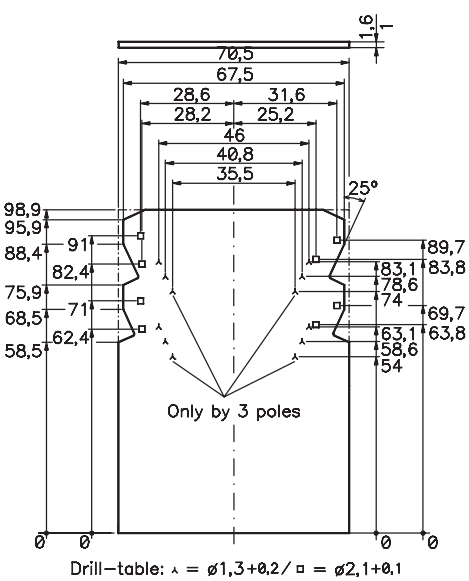




electronics

gesis

# Pluggable Electrical Installation System

# Electrical installation today: plug in and go

gesis® EIB

## GST18

The components of the product line GST 18 are certified according to DIN VDE 0628 and are suited for installation of lighting systems, switches and outlets. They are available in 3 pole, 4 pole, 5 pole and 6 pole configurations and are rated up to 250V or 250/400V, 16A.

## BST / EST

You can choose among three product series for the transmission of 2 pole EIB signals. Depending upon your application, you can select either the BST bus connector or the compact connector of the EST line. Wherever you require both power and signal at the same time, these twin connectors have proven extremely practical. All products of this line are marked with a green EIB coding.

A special variation – mechanically not compatible of course – allows for the transmission of bus, control or loud-speaker signals.

## Flat cable systems

The flat cable technology can, without a doubt, be called a revolution in the field of electrical installation. The system is based upon a flat cable which combines five insulated wires for electrical network applications and, in parallel, a 2 pole screened signal line – all in one cable. For applications requiring only one version, we also provide the flat cables separately. Connectivity is achieved by means of an insulation piercing connection technique which is possible at any point on the main line. Without having to interrupt the main line, you can add a required branch line by means of plug-in connectors.

**Components in 2 pole, 3 pole, 4 pole, 5 pole and 6 pole configuration**

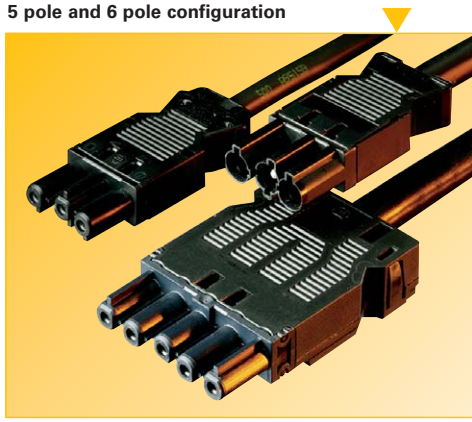

**Compact connector for power and signals**

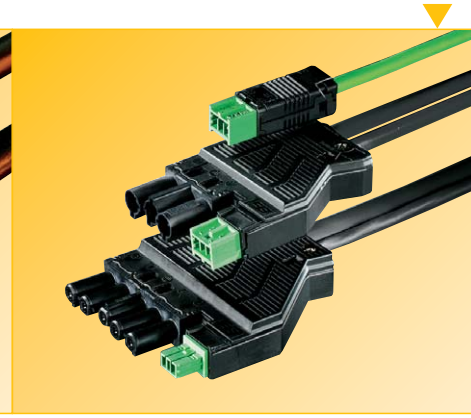

**Connection to the flexible cable**

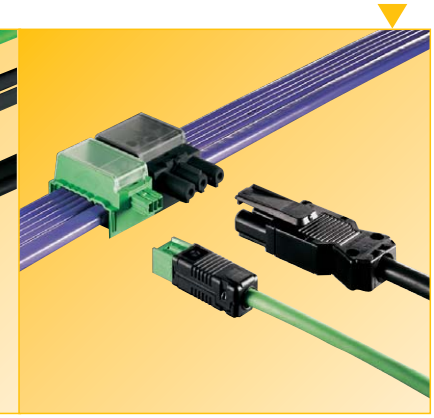

# gesis

## Low voltage systems

The ***gesis*** system also allows for low voltage systems as well. Using pluggable electrical transformers, you can change directly to the two low voltage lines ST16 or ST17.

## EIB systems

Distributed EIB switching devices can be easily integrated into the installation system as required due to its pluggable design. These EIB switching devices are available in two basic versions: EIB-V, which is characterized by its flat and compact design. And EIB-M, a highly flexible solution which is comprised of individual modules.

## Stacking coordinates

The stacking coordinates provide an individual solution for each application. The coordinates are made of zinc-plated sheet steel and are equipped with TS 35 mounting rails. They accept both terminal blocks and modular devices in any configuration. The ***gesis*** connector system functions as an interface over the entire network leading to the end devices.

**Pluggable low voltage systems**

**Distributed EIB switching devices can be integrated**

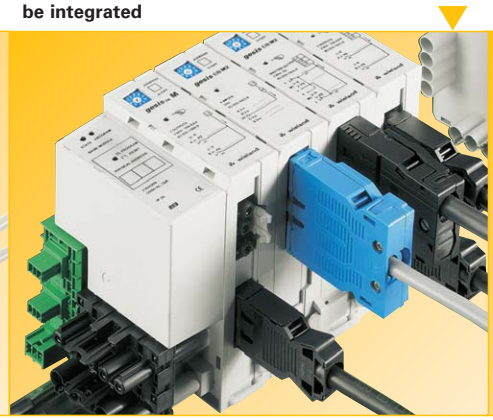

**Stacking coordinates**

**Please contact Wieland Electric Inc. for your *gesis* systems catalog.**

# Schedule for connectable

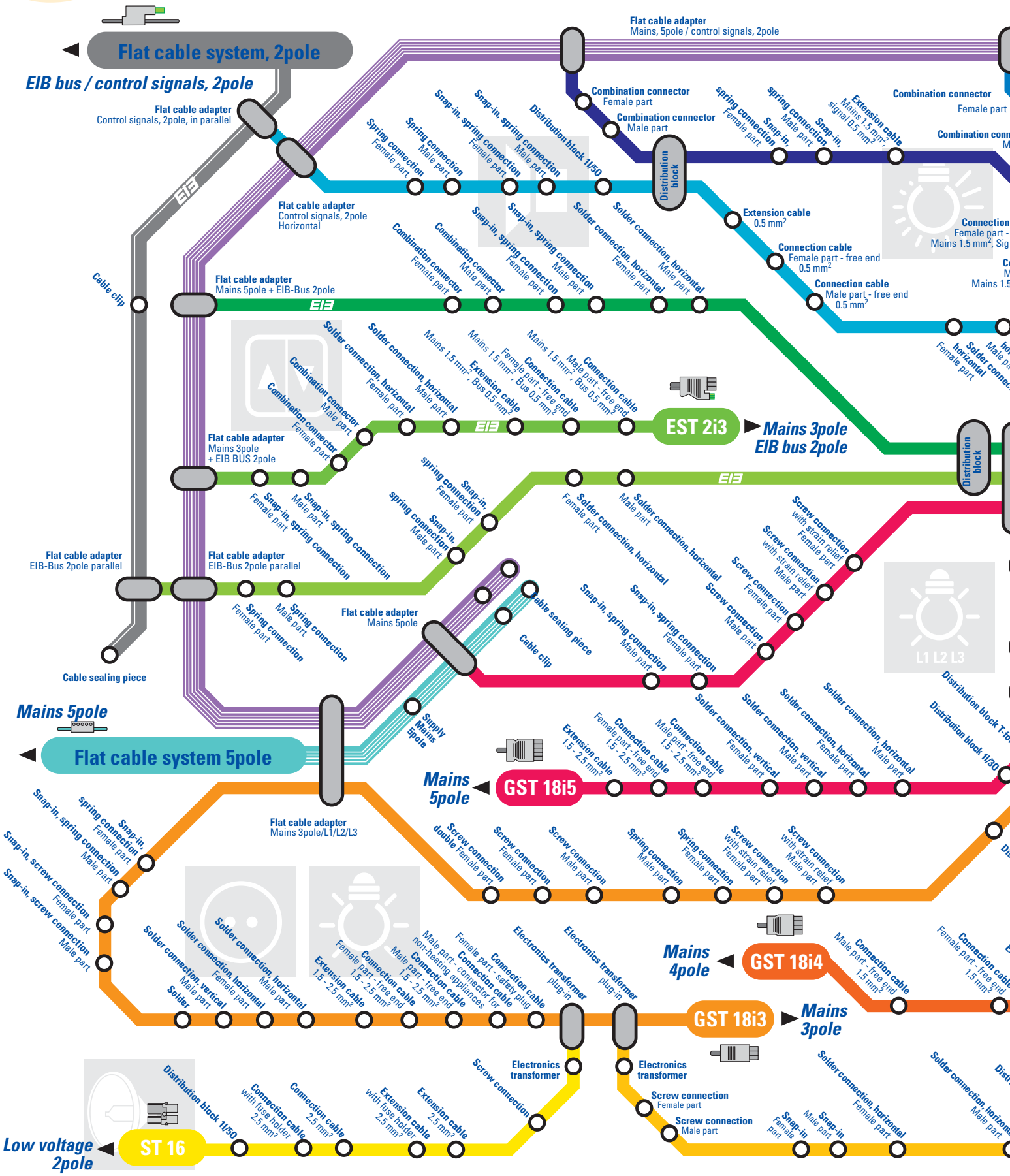

# Components

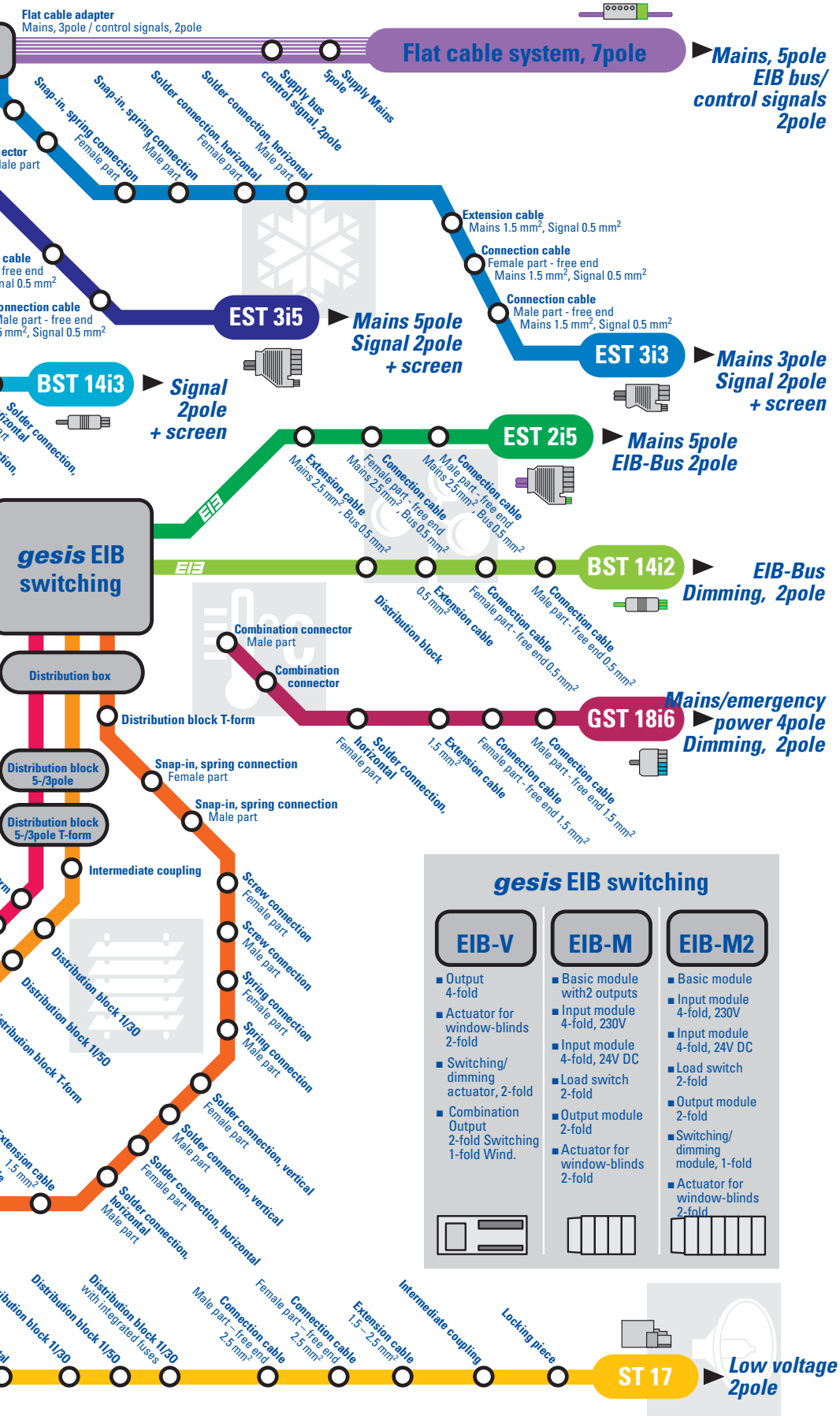


## Contents


**GST 18i3** *Mains, 3pole*

**GST 18i4** *Mains, 4pole*

**GST 18i5** *Mains, 5pole*

**GST 18i6** *Mains/emergency power supply 4pole Dimming, 2pole*

**BST 14i2** *EIB bus Dimming, 2pole*

**EST 2i3** *Mains, 3pole EIB bus, 2pole*

**EST 2i5** *Mains, 5pole EIB bus, 2pole*

**BST 14i3** *Signal, 2pole + screen*

**EST 3i3** *Mains, 3pole Signal, 2pole + screen*

**EST 3i5** *Mains, 5pole Signal, 2pole + screen*

**Flat cable system, 5pole** *Mains, 5pole*

**Flat cable system, 2pole** *EIB bus/control signals, 2pole*

**Flat cable system, 7pole** *Mains, 5pole EIB bus/control signals, 2pole*

**ST 16** *Low voltage, 2pole*

**ST 17** *Low voltage, 2pole*

**gesis EIB switching devices** *EIB-V EIB-M EIB-M2*

**Distributor**

**Accessories**

**Technical information**


gesis

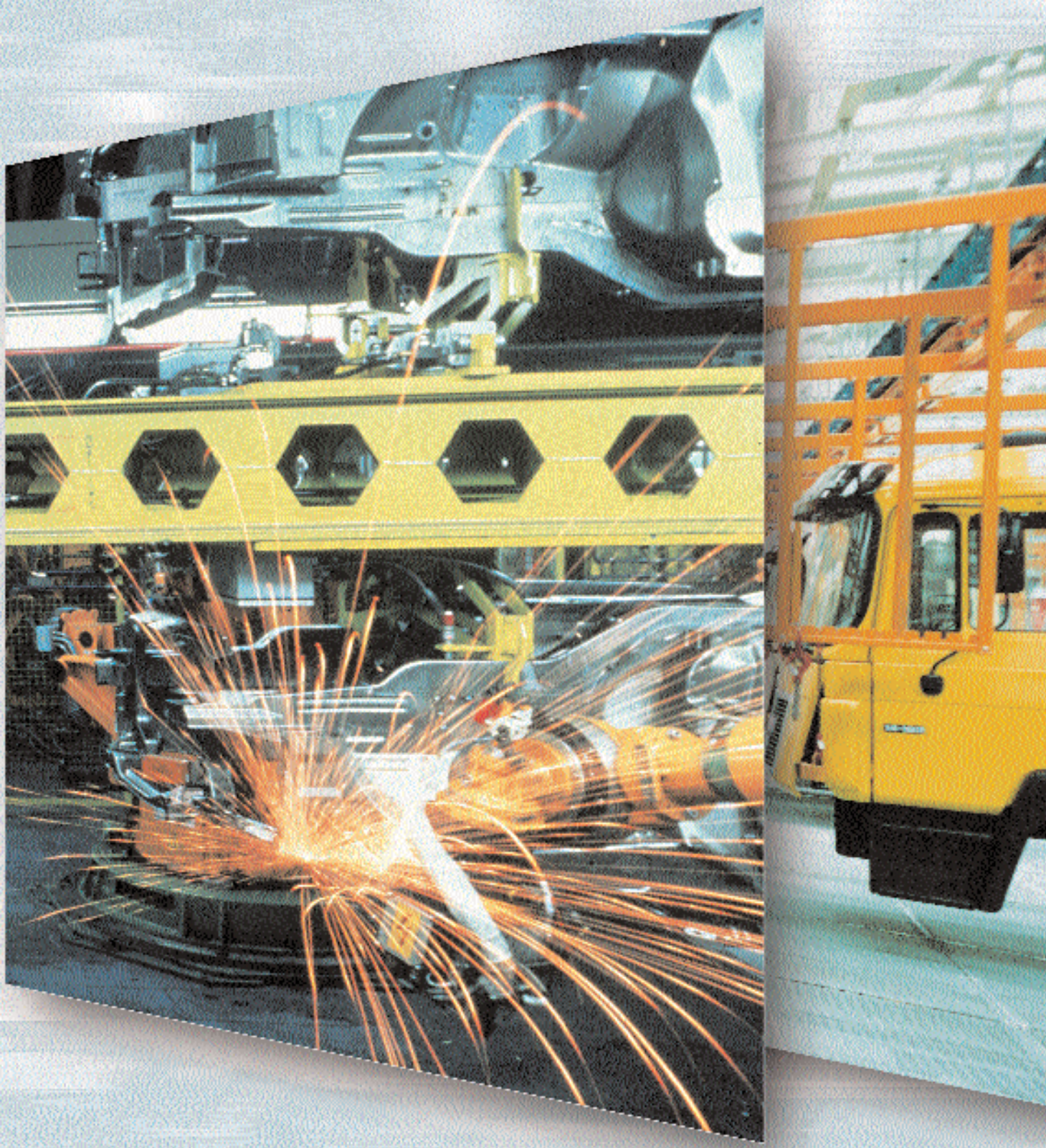

revos

# Industrial Multipole Connectors

# revos

| Series | | Rated voltage | | Rated current |
|---|---|---|---|---|
| **Introduction** | Industrial multipole connectors | VDE | UL/CSA | |
| ***revos*** BASIC | Inserts/hoods and housings | 500 V | 600 V | 16 A |
| | Multipole adapters | 500 V | 600 V | 16 A |
| | Inserts/hoods and housings | 690 V/400 V | 600 V | 16 A |
| | Multipole adapters | 500 V | 600 V | 16 A |
| | Inserts/hoods and housings | 690 V | 600 V | 16 A |
| | Multipole adapters | 500 V | 600 V | 16 A |
| | Multiple multipole connectors | 500 V | 600 V | 16 A |
| | **Sets with 2 components** | | | |
| | – Multipole adapters | 500 V | 600 V | 16 A |
| | – Multipole adapters | 500 V | 600 V | 16 A |
| | – Multipole adapters | 690 V/400 V | 600 V | 16 A |
| | **Sets with 4 components** | 500 V | 600 V | 16 A |
| | Strain relief frames | 500 V | 600 V | 16 A |
| | | 690 V | 600 V | 16 A |
| | | 250 V | 600 V | 10 A |
| | EMC | | | |
| ***revos*** POWER | | 400 V | 600 V | 35 A |
| | | 690 V | 600 V | 35 A |
| | | 690 V/400 V | 600 V | 82 A |
| | | 690 V | 600 V | 35 A/16 A |
| | | 690 V/400 V 400 V/230 V | 600 V | 40 A/16 A |
| | | 690 V/400 V | 600 V | 100 A/40 A/16 A |
| | | 690 V/400 V | 600 V | 82 A/16 A<br>CSA 70 A/16 A |
| ***revos*** MINI | | 250 V + 400 V | 600 V | 10 A |
| | | 50 V + 250 V | 42 V + 600 V | 10 A |
| ***revos*** HD | Inserts/hoods and housings | 250 V | 600 V | 10 A |
| | Multipole adapters | 250 V | 600 V | 10 A |
| ***revos*** FLEX | Cable to cable couplings | 100 V to 1000 V | 60 V – 600 V | CSA 5 A – 35 A<br>5 A to 40 A |
| ***revos*** IT | Data cable feed-through<br>D-SUB | | | |
| ***revos*** MOT | | 690 V | | 16 A |
| ***revos*** SLIDE | | 250 V | | 10 A |
| ***revos*** EEx i | Special version | 90 V | | 16 A |
| ***revos*** | **Accessories** | | | |

# CONTENTS


| Number of poles + ground | Connection style | |
|---|---|---|
| | | Page 614 |
| 6, 10, 16, 24, 32, 48 | Screw, crimp, spring connection | Page 630 |
| 6, 10, 16, 24, 32, 48 | Screw and spring connection | Page 630 |
| 3, 6, 10, 16, 20, 26, 32 | Screw connection | Page 642 |
| 3, 6, 10 | Screw and spring connection | Page 642 |
| 6, 10, 16, 24, 32, 48 | Screw and crimp connection | Page 654 |
| 6, 10, 16, 24 | Screw and spring connection | Page 654 |
| 16, 24 | Screw connection | Page 664 |
| 6, 10, 16, 24 | Screw connection | Page 666 |
| 6, 10, 16, 24 | Screw connection | Page 668 |
| 3, 6, 10 | Screw connection | Page 670 |
| 6, 10, 16, 24 | Screw connection | Page 672 |
| 6, 10, 16, 24 | Screw and crimp connection | Page 674 |
| 6, 10, 16, 24 | Screw and crimp connection | Page 678 |
| 40, 64 | Screw and crimp connection | Page 682 |
| 6, 10, 16, 24 | | Page 684 |
| 6 | Screw connection | Page 688 |
| 6 | Screw connection | Page 692 |
| 4 | Screw connection | Page 696 |
| 4- / 6 | Screw connection | Page 698 |
| 6- / 6 | Screw connection | Page 702 |
| 3- / 3- / 6 | Screw connection | Page 704 |
| 4- / 2 | Screw connection | Page 706 |
| 3, 4 | Screw connection | Page 712 |
| 7, 8 | Crimp connection | Page 712 |
| 15, 25, 40, 64 | Crimp connection | Page 718 |
| | | Page 732<br>Page 740 |
| 9 to 100 | Solder connection | Page 754<br>Page 756 |
| 10 | Crimp connection | Page 758 |
| 24 | Crimp connection | Page 760 |
| 6, 10, 16, 24, 48 | Screw connection | Page 766 |
| | | Page 774 |

# Industrial multipole connectors
## General

Industrial multipole connectors are specially designed for applications under extreme external conditions. The main areas of application are the automotive industry, machine construction and industrial system building, and I&C technology.

They make the installation of machines and industrial systems easier and help to save time. The units or components can be put to in-house quality checks and make the start-up of industrial systems much easier and faster.

Industrial multipole connectors by Wieland have existed in their proven quality for centuries. Today, they are integrated into new product families:

**revos** BASIC — the proven robust multipole connectors in a comprehensive and versatile product range

**revos** POWER — for rated currents higher than 16 A, also available with mixed contacts

**revos** MINI — our robust small connectors in 3pole through 8pole configurations

**revos** HD — high-density connector family 15pole through 64pole configurations accord. to DIN EN 175301-801

**revos** FLEX — modular system for an efficient, intelligent mixture of contacts in industrial multipole connectors

combinations of 4 frame sizes, 5 different inserts, 17 contact variants and 306 hood/housing varieties meet all possible requirements

**revos** IT — data cable feedthrough – the ideal solution for cable entries into closed-bottom housings. They provide a tight connection with strain relief, without disconnecting

**revos** MOT — the new generation of multipole connectors with a plastic housing made from UV and salt water resistant Polyamide

easy handling due to the unique locking lever. 10pole version for rated voltages of 690 V AC and rated currents of 16 A

**revos** SLIDE — the new 24pole multipole connector with floating connections for applications in the control cabinet. Safe and automatic connection for applications with the EX slide-in technique are guaranteed by the available guiding pins.

**revos** Ex — EEx ia connectors for applications in explosion hazardous areas such as in mining and oil refineries

zone 1 applications are only possible with robust hoods and housings made from zinc die cast aluminum with blue finish

***revos*** class I, Zone 2 multipole kits are available certified to CSA standard C 22.2 182.3, E-79-15-95.

# revos

# Industrial multipole connectors
# Hoods and housings

revos

## revos BASIC

**Areas of application**
For most demanding requirements such as in the automotive industry, in machine construction, in industrial system building, and for the I&C technology

**Identification**
Hoods and housings with silicon-free finish in silver gray (similar to RAL 7001)

**Material**
die cast aluminum alloy

**Locking levers**
zinc-plated steel

**Cable glands**
special cable glands for hoods with strain relief and/or protection against bending

## revos MOT- Hoods and housings for demanding environmental conditions

**Areas of application**
For aggressive environments and extreme climatic conditions in all types of applications

**Identification**
Hoods and housings in black (RAL 9005)

**Material**
Polyamide

**Locking spring**
stainless steel

**Cable glands**
special cable glands made from plastic material with strain relief and protection against bending

## revos BASIC- Hoods and housings for extreme environmental conditions

**Areas of application**
For electrical interfaces in exterior applications, for extreme climatic conditions or wet zones, and for exterior railway applications

**Identification**
gray coloring, internal gaskets

**Material**
corrosion-resistant die cast aluminum alloy

**Locking levers**
galvanically zinc-plated steel

**Cable glands**
special cable glands (not part of the standard scope of supply)

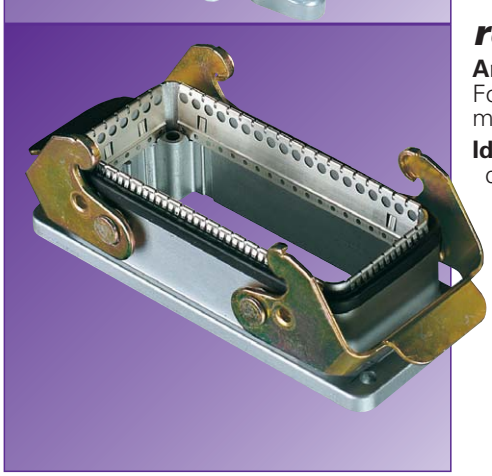

## revos BASIC - Hoods and housings with high EMI shielding

**Areas of application**
For all applications in which protection against electric, magnetic or electromagnetic fields is required for the safety of the industrial system

**Identification**
conductive surface, silver-plated contact zone

**Material**
die cast aluminum alloy

**Locking levers**
zinc-plated steel

**Cable glands**
EMC cable glands

# revos

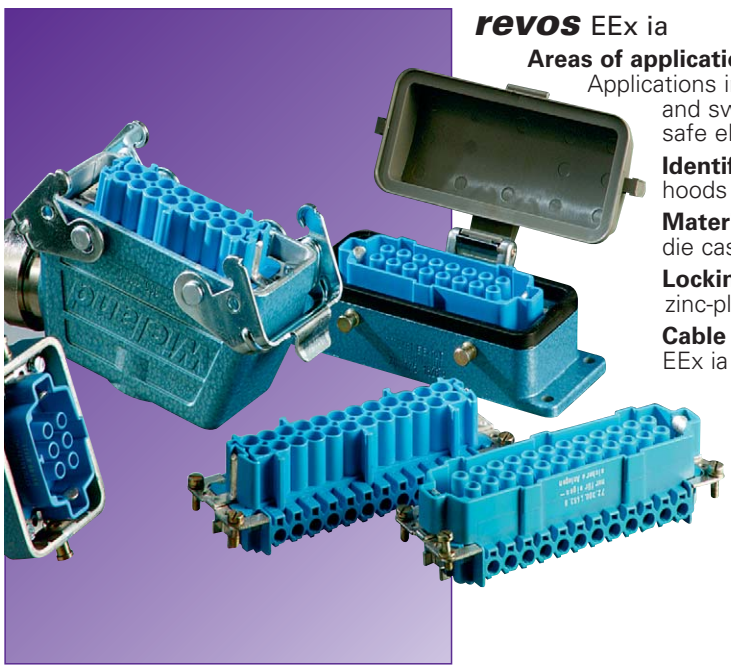

## *revos* EEx ia

**Areas of application**
Applications in mining, in machine construction, in control system and switchgear building, especially in instrinsically safe electrical systems

**Identification**
hoods and housings with light blue finish

**Material**
die cast aluminum alloy

**Locking levers**
zinc-plated steel

**Cable glands**
EEx ia cable glands

Please contact us for Class I, Zone 2 Multipole Kits, certified to CSA standard: C 22.2 182.3, E-79-15-95

## *revos* MINI - small design

**Areas of application**
Applications in machine construction, in control system and switchgear building, inside of lighting systems and small motors

**Identification**
plastic: gray
metal: silicon-free finish in gray

**Material**
thermoplastic material
zinc die cast aluminum alloy

**Locking levers**
zinc-plated steel

**Cable glands**
standard cable glands

ZERTIFIZIERTES QUALITÄTSSICHERUNGSSYSTEM
Reg.-Nr. 14 194-02

# Industrial multipole connectors
# Female and male connector inserts

**revos**

- ❒ Mounted in the direction of the power flow (female insert is live)
- ❒ No mismating due to the special design of the female and male inserts
- ❒ Consecutive numbers both on the contact and on the connection sides
- ❒ Mixed contacts possible

**with screw connection**

- ❒ Captive hardware
- ❒ Screws are protected against accidental loosening
- ❒ Delivered with open clamping body
- ❒ Versions with and without wire guard
- ❒ Wire guards prevent stranded wires from being damaged
- ❒ Due to an integrated screwdriver guide, both electric and pneumatic screwdrivers can be used

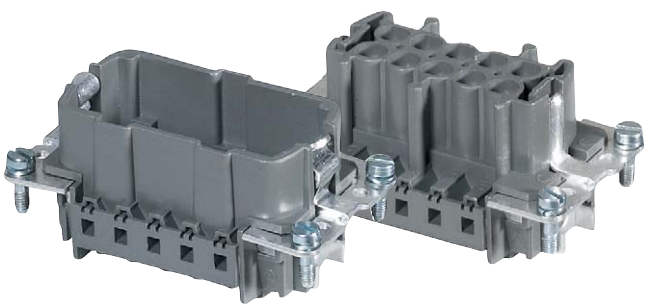

**with crimp connection**

- ❒ Corrosion-resistant due to gas-tight connections (cold welding)
- ❒ Constant feed through resistance
- ❒ Rapid mounting
- ❒ Crimp contacts safely latch into the female and male inserts
- ❒ Female and male contacts in various cross sections
- ❒ The cross sections are represented by ID rings on the contacts:

| | | | |
|---|---|---|---|
| 0.50 | $mm^2$ | – ring | 20 AWG |
| 0.75 – 1 | $mm^2$ | 1 ring | 18 AWG |
| 1.50 | $mm^2$ | 2 rings | 16 AWG |
| 2.50 | $mm^2$ | 3 rings | 14 AWG |
| 4.00 | $mm^2$ | – ring | 12 AWG |

For crimping tools see ***facts*** & DATA

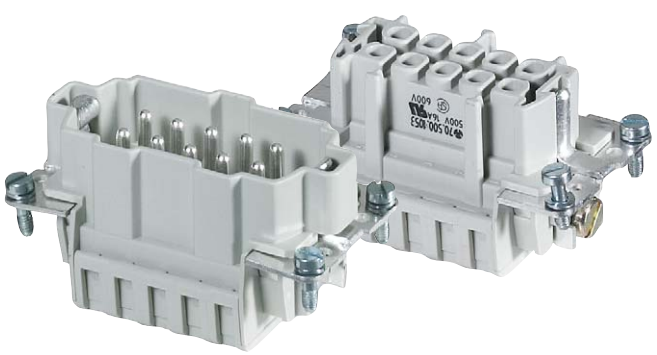

**with spring connection**

- ❒ Vibration and shock proof connections
- ❒ Low feed through resistance
- ❒ Connection style: 0.14 – 2.5 $mm^2$ 26 – 12 AWG, solid and fine stranded
- ❒ High installation comfort due to TOP connections
- ❒ Wire entry in parallel to the screwdriver
- ❒ Screwdriver blade: 3.5 mm x 0.5 mm
- ❒ Plug together with the screw and crimp connectors

# Materials

# revos

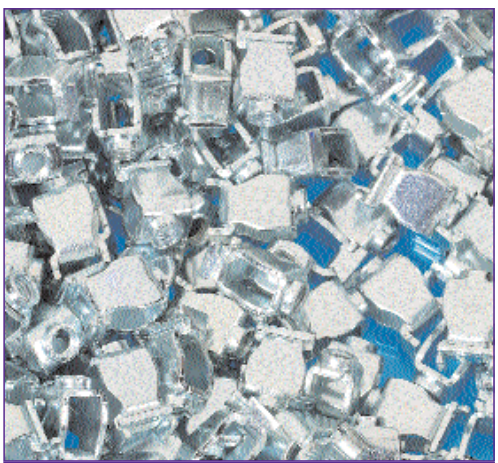

**for screw connection**

- ❒ Contact parts: Brass with surface treatment
- ❒ Wire guard: phosphor bronze
- ❒ Clamping screws: galvanically refined steel

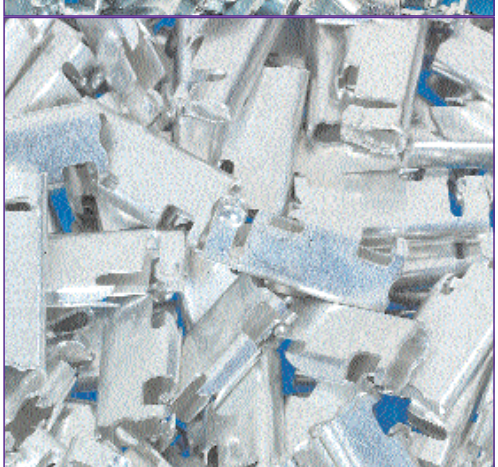

**for crimp connection**

- ❒ Female and male contacts: brass, galvanic surface treatment

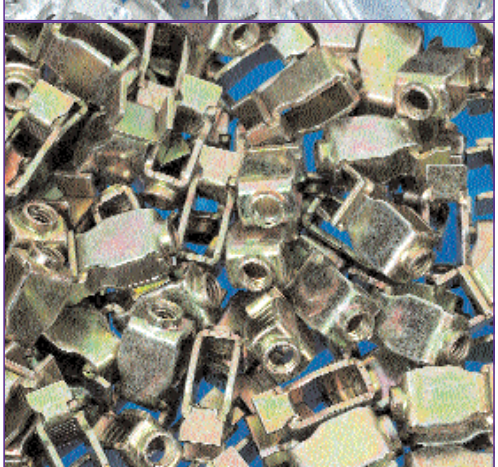

**for spring connections**

- ❒ Spring: refined spring steel
- ❒ Current carrying bar: copper alloy, with galvanic surface treatment

**for female and male connector inserts**

- ❒ Insulating parts from fiberglass reinforced Polyamide
  (for technical information see ***facts*** & DATA)

**for multipole adapters**

- ❒ Insulating part: Polyamide
  Contact parts: tin-plated brass

# Industrial multipole connectors

# revos

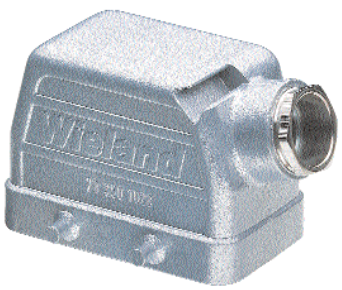


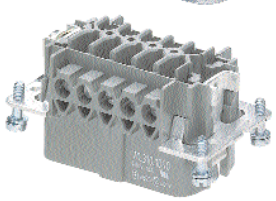

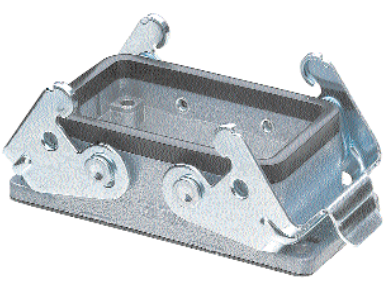

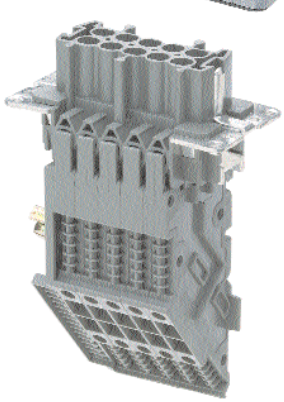

**Technical information:**

**Material:**

| | |
|---|---|
| Hoods and housing: | die cast aluminum alloy |
| Surface: | silver gray, silicon-free finish |
| Mounting plates for female and male connector inserts: | nickel-plated brass |
| Ground contact screw connection: | nickel-plated brass |
| Male pins and female contacts: | Brass with surface treatment |
| Clamping screws: | galvanically zinc-plated steel |
| Locking levers: | galvanically zinc-plated and dichromated steel |
| Pressure screw: | nickel-plated brass |
| Pressure screw with strain relief and flared cable entry: | nickel-plated brass |
| Gaskets: | Neoprene (oil-resistant and anti-aging) |
| Hinged cover: | Polyamide |
| Temperature range: | -40° C – +110° C |
| Insulating parts for: | 70.3; 70.5; 70.7; Polyamide, fiberglass reinforced |
| Multipole adapters: | |
| Female and male connector inserts: | Polyamide, fiberglass reinforced |
| Adapter | |
| Insulating part: | Polyamide |
| Contact parts: | tin-plated brass |
| Wire strip length for the multipole adapters: | 9 – 12 mm |
| Degree of protection accord. to DIN 60 529: | IP 55 |

# revos

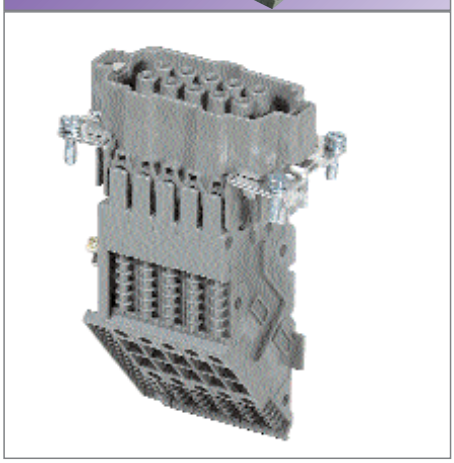

**Multipole adapters**

- ❑ Space-saving connection element for industrial multipole connectors consisting of: connector contact insert with snap-onconnector
- ❑ Multipole adapters are available with female or male connector inserts
- ❑ Preassembled unit complete with male housing for mounting to the control cabinet wall
- ❑ Easy handling:
  slide the multipole adapter to the housing and fix it with screws
- ❑ TOP connection design
- ❑ Testing possible when connected, i.e. no power interruption necessary
- ❑ Clearly identified and easily accessible clamping points
- ❑ 4digit or 6digit marking fields
- ❑ Safe and time-saving wiring
- ❑ Reduced control cabinet space due to the small design
- ❑ Potential commoning due to an insulated jumper bar

# Industrial multipole connectors

# revos

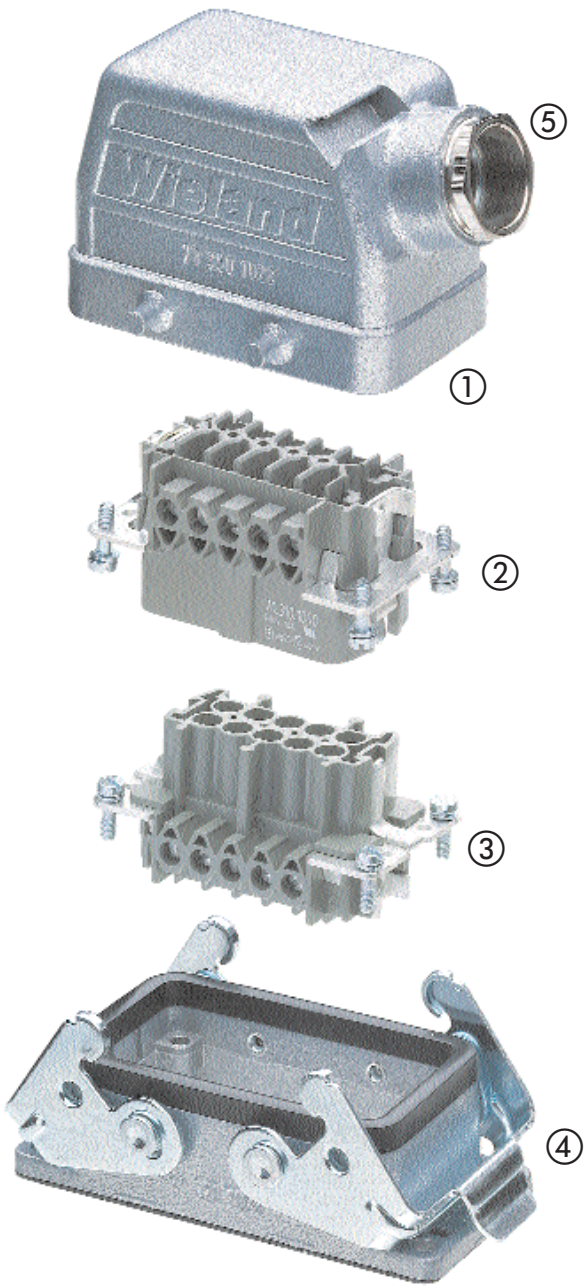


**A complete industrial multipole connector consists of the following components:**

① **Hood**
- ❒ low and high designs
- ❒ narrow-side, wide-side and top cable entries
- ❒ Single or double locking levers with cable glands

version 7x.xxx.xxxx.0
version 7x.xxx.xxxx.3

② **Female and**
③ **male inserts**
- ❒ screw connection
- ❒ crimp connection (contacts supplied separately)
- ❒ spring connection

④ **Housing**
- ❒ open-bottom housing
- ❒ with or without plastic cover
- ❒ single or double locking lever
- ❒ closed-bottom housing with cable glands
- ❒ low or high designs
- ❒ one or two locking levers with cable glands version 7x.xxx.xxxx.0
- ❒ cable to cable coupling

⑤ **Cable gland**
- ❒ cable glands in IP 65 made from plastic or nickel plated-brass
- ❒ special cable glands with strain relief and protection against bending
- ❒ EMC cable gland
- ❒ EX cable gland
- ❒ Large range of accessories

**Accessories**
- ❒ coding pins
- ❒ marking tags

**The following versions of multipole connector hoods are available:**

**Version A**

Hood with
narrow-side entry
cable gland on the right

**Version B**

Hood with
wide-side entry
cable gland in the front

# revos

7x.xxx.xxxx.0

7x.xxx.xxxx.1

7x.xxx.xxxx.2

7x.xxx.xxxx.3

**Available hoods and housings:**

**Hoods**

| | |
|---|---|
| ❒ with cable gland, without strain relief | 7x.xxx.xxxx.0 |
| ❒ with metric thread | 7x.xxx.xxxx.1 |
| ❒ with integrally cast or screwed in metric intermediate support | 7x.xxx.xxxx.2 |
| ❒ with strain relief | 7x.xxx.xxxx.3 |

The cable glands are delivered together with sealing gaskets. The gaskets have different cuts for the various cable diameters and can be cut out as required.

By using the suited cable glands (see the accessories) you will achieve IP 65 degree of protection.

**Version C**

Hood with
top entry cable gland

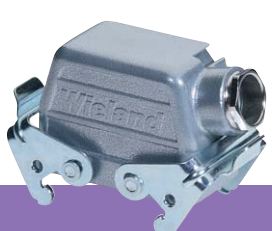


**Version D**

Hood with
narrow-side entry
cable gland on the right
and locking levers

**Version E**

Hood with
wide-side entry
cable gland in the front
and locking levers

**Version F**

Hood with
top entry
cable gland and lock-
ing levers

# Industrial multipole connectors
## Housings

revos

### Housings

- open-bottom design (versions a and e)
- closed-bottom design (versions b, c, d, f, g, h and i)

### Open-bottom housings

These housings are open at the bottom for panel mounting.
They are equipped with two gaskets.

- one gasket at the bottom
- another gasket between housing and hood

The main area of application is the connection of control and line signals to the control cabinet. The mating hood is mounted to the housing on the control cabinet wall.

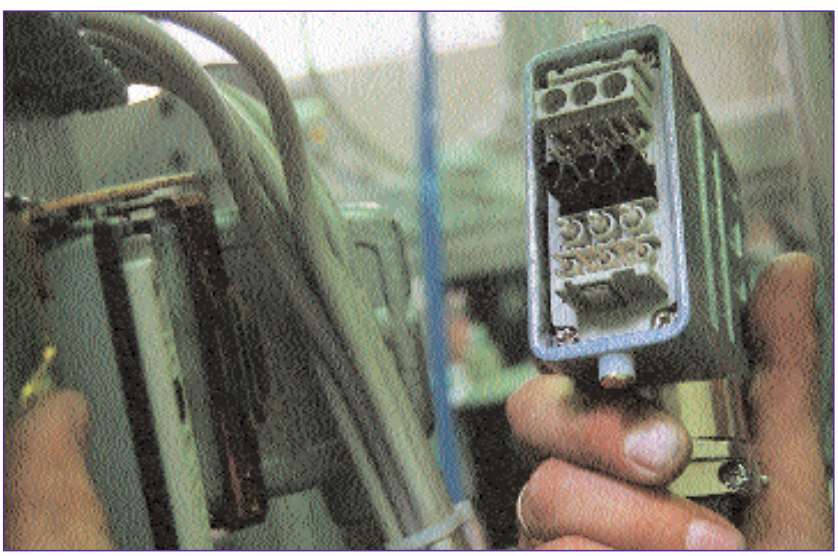

**Version a**

Open-bottom housing

**Version b**

Closed-bottom housing with two cable glands

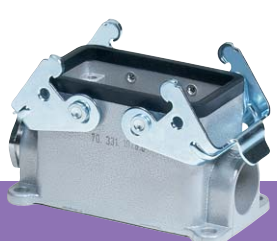

**Version c**

Closed-bottom housing with one narrow-side entry cable gland at the left

**Version d**

Closed-bottom housing with one bottom entry cable gland

# revos

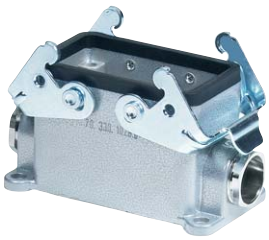

**Closed-bottom housings**

- with metric cable gland, without strain relief
  **7x.xxx.xxxx.0**

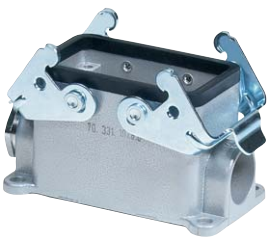

- with metric thread
  **7x.xxx.xxxx.1**

These housings usually have one or two cable entries. They are sealed by means of an appropriate cable gland. Additionally, the cable glands function as reliable strain reliefs for the clamping points.

**Version e**

Open-bottom housing with protective cover

**Version f**

Closed-bottom housing with protective cover and two cable glands

**Version g**

Closed-bottom housing with protective cover and one narrow-side entry cable gland at the left

**Version h**

Closed-bottom housing with protective cover and one narrow-side entry cable gland at the right

**Version i**

Closed-bottom housing with protective cover and one bottom entry cable gland

# Information on how to change over from Pg to metric threads

**revos** BASIC

**Pg threads are available upon request!**

## 1. Basic legal conditions

The European standard EN 50 262 "Metric Cable Glands for Electrical Installation" was ratified on April 01, 1989 by CENELEC (European Committee for Electrotechnical Standardization) and put into force.

A corresponding German standard DIN EN 50 262 published in March 1999 will then replace the national standards:
VDE security standard 0619 quoting standards DIN 46 319 and DIN 46 320, with a transition period until March 01, 2001.

EN 50 262 is valid in all EC countries and countries not belonging to the EC and cooperating in CENELEC will accept the standard.

The big difference in the new EN standard is its character as a security standard.
As a building standard it only defines the metric thread and its lead.

## 2. Effects of the change

The changeover will affect all manufacturers of cable glands, cable entries and housings for rectangular connectors.

The ten Pg sizes :

Pg 7 / 9 / 11 / 13.5 / 16 / 21 / 29 / 36 / 42 and 48

are replaced by eight metric sizes :

M 12 / 16 / 20 / 25 / 32 / 40 / 50 and 63

## 3. Comparison of the Pg/metric cable gland sizes

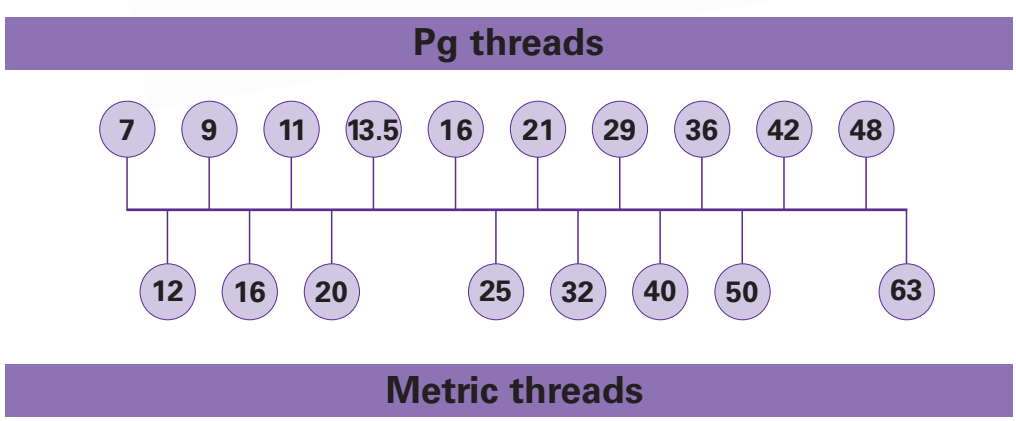


## 4. Assigning the Pg/metric cable glands

As the ten Pg sizes are replaced by eight metric threads, the users have to reassign the connection ranges of the cables to the thread sizes and housings.

The cable gland manufacturers have different assignments because the new standard is not a construction standard and does not specify any standardization.

# 5. Conversion

## 5.1 Comparison between Pg thread and metric thread

| Pg thread | Metric thread | Preferred types |
|---|---|---|
| Pg 7 | M 12 | |
| Pg 9 | M 16 | |
| Pg 11 | M 20 | X |
| Pg 13.5 | M 20 | X |
| Pg 16 | M 20 | X |
| Pg 21 | M 25 | X |
| Pg 29 | M 32 | X |
| Pg 36 | M 40 | |
| Pg 42 | M 50 | |

Hoods of the revos BASIC series with Pg thread 13.5 and 16 are also available with M 25, while PG thread 21 is also available with M 32 thread.

If you require the Pg 16 and 24 housings in M 32, you will have to use the housings of high design.

## 5.2 Connection range for housing versions 7x.xxx.xxxx.0

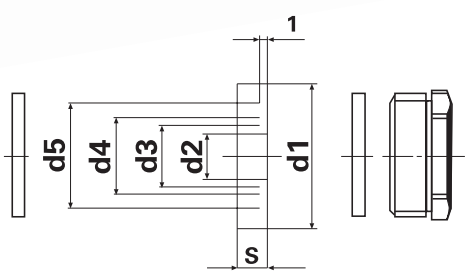


For more information visit us on the internet under www.wieland-electric.com

Please see the following table for the connection ranges of cable glands without strain relief:

| Metric thread | d1 | d2 | Connection range in mm | d3 | Connection range in mm | d4 | Connection range in mm | d5 | Connection range in mm |
|---|---|---|---|---|---|---|---|---|---|
| **M 16** | 13.8 | 3 | 2 – 4.5 | 6 | 5 – 7.5 | 9 | 8 – 10.5 | | |
| **M 20** | 17.6 | 4 | 3 – 5.5 | 7 | 6 – 8.5 | 10 | 9 – 11.5 | 13 | 12 – 14.5 |
| **M 25** | 22.6 | 8.5 | 7.5 – 10 | 11.5 | 10.5 – 13 | 14.5 | 13.5 – 16 | 17.5 | 16.5 – 19 |
| **M 32** | 29.6 | 16 | 15 – 17.5 | 19 | 18 – 20.5 | 22 | 21 – 23.5 | 25 | 24 – 26.5 |

## 5.3 Connection ranges for housing versions with flared gland 7x.xxx.xxxx.3

| Metric thread | Connection range in mm |
|---|---|
| **M 16** | 6 – 9 |
| **M 20** | 9 – 13.5 |
| **M 25** | 14 – 20 |
| **M 32** | 19 – 29 |

Information on hazardous location approval : Class I, Zone 2 Multipole Kits are available certified to CSA standard C22.2 182.3, E-79-15-95.

Please contact us to discuss your applications.

# revos BASIC

## Technical information

| | |
|---|---|
| **Approvals** | UL, CSA, SEV |
| **Applicable standards** | IEC 61 984 |
| **Contact inserts** | |
| Rated current | 16 A |
| Rated voltage | 500 V |
| Nominal voltage accord. to UL | 600 V |
| Nominal voltage accord. to CSA | 600 V |
| Pole configurations | 6, 10, 16, 24, 32 (2x16), 48 (2x24), + ground |
| Screw connection | 0.5 – 2.5 $mm^2$ / 20 – 12 AWG |
| Crimp connection | 0.5 – 4.0 $mm^2$ / 20 – 12 AWG |
| Spring connection | 0.14 – 2.5 $mm^2$ / 26 – 12 AWG |
| Degree of pollution | 3 |
| Temperature range | –40 to +110 °C |
| **Multipole adapter** | |
| Rated current | 16 A |
| Rated voltage | 500 V |
| Nominal voltage accord. to UL | 600 V |
| Nominal voltage accord. to CSA | 600 V |
| Pole configurations | 6, 10, 16, 24, + ground |
| Screw connection | 0.5 – 4.0 $mm^2$ / 20 – 12 AWG |
| Spring connection | 0.5 – 2.5 $mm^2$ / 20 – 12 AWG |
| Degree of pollution | 3 |
| Temperature range | –40 to +110 °C |
| **Contacts** | |
| Material | copper alloy |
| Surface (screw, crimp, multipole adapter contacts) | tin-plated |
| Surface (crimp, screw contacts) | gold-plated |
| Surface (crimp, spring contacts) | silver-plated |
| **Hoods and housings** | |
| Material | die cast aluminum alloy |
| Surface | silver gray, silicon-free finish |
| Locking levers | zinc-plated steel |
| Gaskets | NBR |
| Temperature range | –40 to +110 °C |
| Degree of protection accord. to DIN EN 60 529 | |
| with latched locking levers | IP 55 |
| with appropriate cable gland | IP 65 |

revos

# Industrial Multipole Connectors

# Industrial Multipole Connectors
## Female/male inserts and multipole adapter

# revos BASIC

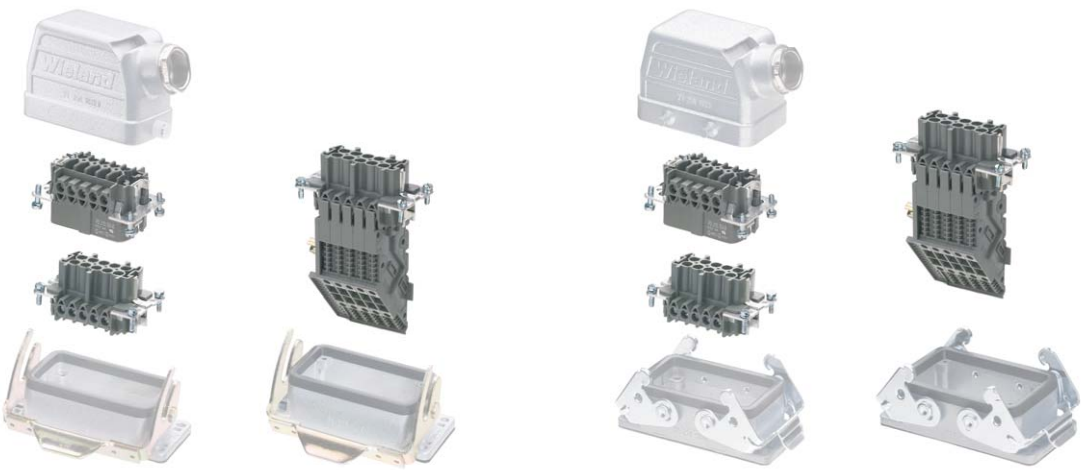

**500 V**, **16 A** IEC 61 984 **600 V** UL/CSA

| | | Rated current | Cross section | Approvals | Wire strip length | Contacts | Std. pack |
|---|---|---|---|---|---|---|---|
| **Screw connection** | Female insert | 16 A | 0.25 – 2.5 mm² 22 – 12 AWG | | 7 mm | tin-plated | 10 |
| | | | | | | | 5 |
| | | | | | 7 mm | gold-plated | 10 |
| | Male insert | 16 A | 0.25 – 2.5 mm² 22 – 12 AWG | | 7 mm | tin-plated | 10 |
| | | | | | | | 5 |
| | | | | | 7 mm | gold-plated | |
| **Crimp connection** | Female insert without crimp contacts | 16 A | 0.5 – 4.0 mm² 20 – 12 AWG | | 7 mm | tin-plated | 10 |
| | | | | | | | 5 |
| | Male insert without crimp contacts | 16 A | 0.5 – 4.0 mm² 20 – 12 AWG | | 7 mm | tin-plated | 10 |
| | | | | | | | 5 |
| **Spring connection** | Female insert 500 V / IEC 61 989 | 16 A | 0.14 – 2.5 mm² 26 – 12 AWG | | 7 mm | silver-plated | 10 |
| | | | | | | | 5 |
| | Male insert 500 V / IEC 61 989 | 16 A | 0.14 – 2.5 mm² 26 – 12 AWG | | 7 mm | silver-plated | 10 |
| | | | | | | | 5 |
| **Screw connection** Multipole adapter long design (6 marking fields) | Female insert, ground right | 16 A | 0.5 – 4.0 mm² 20 – 12 AWG | | 12 mm | tin-plated | 10 |
| | Female insert, ground left | 16 A | 0.5 – 4.0 mm² 20 – 12 AWG | | 12 mm | tin-plated | 10 |
| | Male insert, ground right | 16 A | 0.5 – 4.0 mm² 20 – 12 AWG | | 12 mm | tin-plated | 10 |
| | Male insert, ground left | 16 A | 0.5 – 4.0 mm² 20 – 12 AWG | | 12 mm | tin-plated | 10 |
| **Screw connection** Multipole adapter short design (4 marking fields) | Female insert, ground right | 16 A | 0.5 – 4.0 mm² 20 – 12 AWG | | 12 mm | tin-plated | 10 |
| | Female insert, ground left | 16 A | 0.5 – 4.0 mm² 20 – 12 AWG | | 12 mm | tin-plated | 10 |
| | Male insert, ground right | 16 A | 0.5 – 4.0 mm² 20 – 12 AWG | | 12 mm | tin-plated | 10 |
| | Male insert, ground left | 16 A | 0.5 – 4.0 mm² 20 – 12 AWG | | 12 mm | tin-plated | 10 |
| **Spring connection** Multipole adapter short design (6 marking fields) | Female insert, ground right | 16 A | 0.5 – 2.5 mm² 20 – 12 AWG | | 9 mm | tin-plated | 10 |
| | Female insert, ground left | 16 A | 0.5 – 2.5 mm² 20 – 12 AWG | | 9 mm | tin-plated | 10 |
| | Male insert, ground right | 16 A | 0.5 – 2.5 mm² 20 – 12 AWG | | 9 mm | tin-plated | 10 |
| | Male insert, ground left | 16 A | 0.5 – 2.5 mm² 20 – 12 AWG | | 9 mm | tin-plated | 10 |

# revos

## Contacts for crimp version

| | Cross section mm² | | Part no. | Std. pack | Cross section mm² | | Part no. | Std. pack |
|---|---|---|---|---|---|---|---|---|
| | | | tin-plated | | | | gold-plated | |
| **Female contacts** | 0.5 | 20 AWG | 02.123.7021.0 | 200 | 0.5 | 20 AWG | 02.123.7001.0 | |
| | 0.75 – 1 | 18 AWG | 02.123.7121.0 | 200 | 0.75 – 1 | 18 AWG | 02.123.7101.0 | |
| | 1.5 | 16 AWG | 02.123.7221.0 | 200 | 1.5 | 16 AWG | 02.123.7201.0 | 200 |
| | 2.5 | 14 AWG | 02.123.7321.0 | 200 | 2.5 | 14 AWG | 02.123.7301.0 | |
| | 4 | 12 AWG | 02.123.7421.0 | 200 | 4 | 12 AWG | 02.123.7401.0 | |
| **Male contacts** | 0.5 | 20 AWG | 05.543.7021.0 | 200 | 0.5 | 20 AWG | 05.543.7001.0 | |
| | 0.75 – 1 | 18 AWG | 05.543.7121.0 | 200 | 0.75 – 1 | 18 AWG | 05.543.7101.0 | |
| | 1.5 | 16 AWG | 05.543.7221.0 | 200 | 1.5 | 16 AWG | 05.543.7201.0 | 200 |
| | 2.5 | 14 AWG | 05.543.7321.0 | 200 | 2.5 | 14 AWG | 05.543.7301.0 | |
| | 4 | 12 AWG | 05.543.7421.0 | 200 | 4 | 12 AWG | 05.543.7401.0 | |
| Crimping tool | | | 95.101.0800.0 | 1 | | | silver-plated | |
| Crimping die „B“ | | | 05.502.2100.0 | 1 | | | upon request | |
| Contact positioner „3“ | | | 05.502.3300.0 | 1 | | | | |
| Extraction tool | | | 05.502.3500.0 | 1 | | | | |

| 6pole + ground | 10pole + ground | 16pole + ground | 24pole + ground | 32pole + ground<br>2 insert<br>1 – 16 poles<br>17 – 32 poles | 48pole + ground<br>2 inserts<br>1 – 24 poles<br>25 – 48 poles |
|---|---|---|---|---|---|
| Part no. | Part no. | Part no. | Part no. | Part no. | Part no. |
| 70.300.0640.0<br>70.301.0640.0 | 70.300.1040.0<br>70.301.1040.0 | 70.300.1640.0<br>70.301.1640.0 | 70.300.2440.0<br>70.301.2440.0 | 70.300.3253.0 | 70.300.4840.0 |
| 70.310.0640.0<br>70.311.0640.0 | 70.310.1040.0<br>70.311.1040.0 | 70.310.1640.0<br>70.311.1640.0 | 70.310.2440.0<br>70.311.2440.0 | 70.310.3253.0 | 70.310.4840.0 |
| 70.700.0658.0 | 70.700.1058.0 | 70.700.1658.0 | 70.700.2458.0 | 70.700.3253.0 | 70.700.4858.0 |
| 70.710.0658.0 | 70.710.1058.0 | 70.710.1658.0 | 70.710.2458.0 | 70.710.3253.0 | 70.710.4858.0 |
| 70.500.0653.0 | 70.500.1053.0 | 70.500.1653.0 | 70.500.2453.0 | 70.500.3253.0 | 70.500.4853.0 |
| 70.510.0653.0 | 70.510.1053.0 | 70.510.1653.0 | 70.510.2453.0 | 70.510.3253.0 | 70.510.4853.0 |
| 70.105.0653.3<br>70.100.0653.3 | 70.105.1053.3<br>70.100.1053.3 | 70.105.1653.3<br>70.100.1653.3 | 70.105.2453.3<br>70.100.2453.3 | 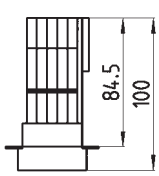 | |
| 70.115.0653.3<br>70.110.0653.3 | 70.115.1053.3<br>70.110.1053.3 | 70.115.1653.3<br>70.110.1653.3 | 70.115.2453.3<br>70.110.2453.3 | | |
| 70.105.0653.4<br>70.100.0653.4 | 70.105.1053.4<br>70.100.1053.4 | 70.105.1653.4<br>70.100.1653.4 | 70.105.2453.4<br>70.100.2453.4 | 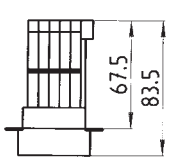 | |
| 70.115.0653.4<br>70.110.0653.4 | 70.115.1053.4<br>70.110.1053.4 | 70.115.1653.4<br>70.110.1653.4 | 70.115.2453.4<br>70.110.2453.4 | | |
| 70.106.0653.0<br>70.101.0653.0 | 70.106.1053.0<br>70.101.1053.0 | 70.106.1653.0<br>70.101.1653.0 | 70.106.2453.0<br>70.101.2453.0 | 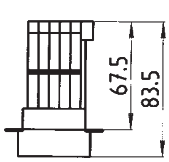 | |
| 70.116.0653.0<br>70.111.0653.0 | 70.116.1053.0<br>70.111.1053.0 | 70.116.1653.0<br>70.111.1653.0 | 70.116.2453.0<br>70.111.2453.0 | | |

# Industrial Multipole Connectors
# Hoods with a single locking lever

# revos BASIC

**Hood type A**

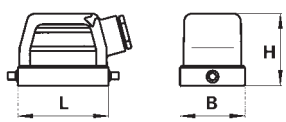


**Hood type B**

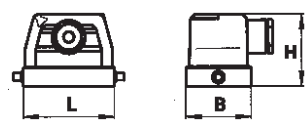


**Hood type C**

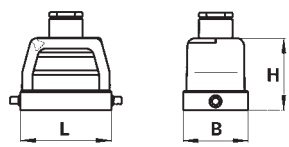


**Degree of protection IP 55**
**Degree of protection IP 65** with matching cable glands (see accessories)

For inserts: **600 V** UL/CSA

For inserts: **500 V** IEC 61 984

| Number of poles | Thread | Gland type | Dimensions in mm | L | W | H | Std. pack |
|---|---|---|---|---|---|---|---|
| Size **6**<br>for connector<br>**6pole + ground** | M 20 | 0 with cable gland<br>1 with threaded collar<br>2 with intermediate support<br>3 with strain relief | | 60 | 43 | 47.5 | 1 |
| | M 25 | 0 with cable gland<br>1 with threaded collar<br>2 with intermediate support<br>3 with strain relief | | 60 | 43 | 47.5 | 1 |
| Size **10**<br>for connector<br>**10pole + ground** | M 20 | 0 with cable gland<br>1 with threaded collar<br>2 with intermediate support<br>3 with strain relief | | 73 | 43 | 53 | 1 |
| | M 25 | 0 with cable gland<br>1 with threaded collar<br>2 with intermediate support<br>3 with strain relief | | 73 | 43 | 53 | 1 |
| Size **16**<br>for connector<br>**16pole + ground** | M 25 | 0 with cable gland<br>1 with threaded collar<br>2 with intermediate support<br>3 with strain relief | | 93.5 | 43 | 60 | 1 |
| | M 32 | 0 with cable gland<br>1 with threaded collar<br>2 with intermediate support<br>3 with strain relief | | 93.5 | 43 | 60 | 1 |
| Size **24**<br>for connector<br>**24pole + ground** | M 25 | 0 with cable gland<br>1 with threaded collar<br>2 with intermediate support<br>3 with strain relief | | 120 | 43 | 70 | 1 |
| | M 32 | 0 with cable gland<br>1 with threaded collar<br>2 with intermediate support<br>3 with strain relief | | 120 | 43 | 70 | 1 |
| Size **48**<br>for connector<br>**48pole + ground** | M 32 | 0 with cable gland<br>1 with threaded collar<br>2 with intermediate support<br>3 with strain relief | | 132 | 90 | 107 | 1 |
| | M 40 | 1 with threaded collar<br>2 with intermediate support | | 132 | 90 | 107 | 1 |

# revos

| Hood<br><br>Hood type A | Hood<br>(not suited for female/male inserts with spring connection)<br><br>for 24pole = 2 x M 25<br><br>Hood type B | Hood<br><br>Hood type C | |
|---|---|---|---|
| | | | |
| Part no. | Part no. | Part no. | |
| 70.350.0635.0<br>70.350.0635.1<br>70.350.0635.2<br>70.350.0635.3 | 70.351.0635.0<br>70.351.0635.1<br>70.351.0635.2<br>70.351.0635.3 | 70.352.0635.0<br>70.352.0635.1<br>70.352.0635.2<br>70.352.0635.3 | |
| 70.353.0635.0<br>70.353.0635.1<br>70.353.0635.2<br>70.353.0635.3 | | 70.354.0635.0<br>70.354.0635.1<br>70.354.0635.2<br>70.354.0635.3 | |
| 71.350.1035.0<br>71.350.1035.1<br>71.350.1035.2<br>71.350.1035.3 | 71.351.1035.0<br>71.351.1035.1<br>71.351.1035.2<br>71.351.1035.3 | 71.352.1035.0<br>71.352.1035.1<br>71.352.1035.2<br>71.352.1035.3 | |
| 71.353.1035.0<br>71.353.1035.1<br>71.353.1035.2<br>71.353.1035.3 | | 71.354.1035.0<br>71.354.1035.1<br>71.354.1035.2<br>71.354.1035.3 | |
| 71.350.1635.0<br>71.350.1635.1<br>71.350.1635.2<br>71.350.1635.3 | 71.351.1635.0<br>71.351.1635.1<br>71.351.1635.2<br>71.351.1635.3 | 71.352.1635.0<br>71.352.1635.1<br>71.352.1635.2<br>71.352.1635.3 | |
| 71.353.1635.0<br>71.353.1635.1<br>71.353.1635.2<br>71.353.1635.3 | | 71.354.1635.0<br>71.354.1635.1<br>71.354.1635.2<br>71.354.1635.3 | |
| 71.350.2435.0<br>71.350.2435.1<br>71.350.2435.2<br>71.350.2435.3 | 71.351.2435.0<br>71.351.2435.1<br>71.351.2435.2<br>71.351.2435.3 | 71.352.2435.0<br>71.352.2435.1<br>71.352.2435.2<br>71.352.2435.3 | |
| 71.353.2435.0<br>71.353.2435.1<br>71.353.2435.2<br>71.353.2435.3 | | 71.354.2435.0<br>71.354.2435.1<br>71.354.2435.2<br>71.354.2435.3 | |
| 70.350.4835.0<br>70.350.4835.1<br>70.350.4835.2<br>70.350.4835.3 | | 70.352.4835.0<br>70.352.4835.1<br>70.352.4835.2<br>70.352.4835.3 | |
| 70.353.4835.1<br>70.353.4835.2 | | 70.354.4835.1<br>70.354.4835.2 | |

# Industrial Multipole Connectors
## Housings with a single locking lever

# revos BASIC

**Housing type a**

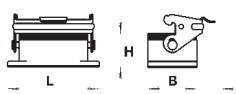


**Housing type b**

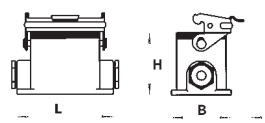


**Housing type c**

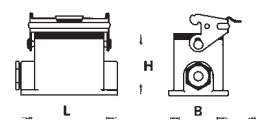


**Housing type d**

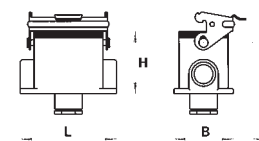


**Housing type i**

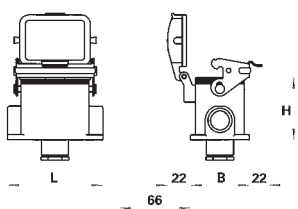


Housing open bottom

Housing type a

Housing closed bottom with two cable glands

Housing type b

Housing closed bottom with one cable gland on the left

Housing type c

**Degree of protection IP 55**
**Degree of protection IP 65** with matching cable glands (see accessories)

For inserts: **600 V** UL/CSA

For inserts: **500 V** IEC 61 984

| Number of poles | Thread | Gland type | L | W | H | Std. pack | Housing open bottom Part no. | Housing closed bottom with two cable glands Part no. | Housing closed bottom with one cable gland on the left Part no. |
|---|---|---|---|---|---|---|---|---|---|
| Size **6** for connector **6pole + ground** | M 20 | 0 with cable gland | 80 | 43 | 28 | 1 | 70.320.0628.0 | | |
| | | | 84 | 52 | 54.5 | 1 | | 70.330.0635.0 | 70.331.0635.0 |
| | | 1 with threaded collar | 84 | 52 | 54.5 | 1 | | 70.330.0635.1 | 70.331.0635.1 |
| Size **10** for connector **10pole + ground** | M 20 | 0 with cable gland | 93 | 43 | 28 | 1 | 71.320.1028.0 | | |
| | | | 94 | 52 | 54.5 | 1 | | 71.330.1035.0 | 71.331.1035.0 |
| | | 1 with threaded collar | 94 | 52 | 54.5 | 1 | | 71.330.1035.1 | 71.331.1035.1 |
| Size **16** for connector **16pole + ground** | M 25 | 0 with cable gland | 113 | 43 | 28 | 1 | 71.320.1628.0 | | |
| | | | 117 | 52 | 56.5 | 1 | | 71.330.1635.0 | 71.331.1635.0 |
| | | 1 with threaded collar | 117 | 52 | 56.5 | 1 | | 71.330.1635.1 | 71.331.1635.1 |
| Size **16** high design for connector **16pole + ground** | M 32 | 0 with cable gland | 117 | 52 | 76.5 | 1 | | 76.334.4035.0 | 76.335.4035.0 |
| | | 1 with threaded collar | 117 | 52 | 76.5 | 1 | | 76.334.4035.1 | 76.335.4035.1 |
| Size **24** for connector **24pole + ground** | M 25 | 0 with cable gland | 140 | 43 | 28 | 1 | 71.320.2428.0 | | |
| | | | 144 | 52 | 56.5 | 1 | | 71.330.2435.0 | 71.331.2435.0 |
| | | 1 with threaded collar | 144 | 52 | 56.5 | 1 | | 71.330.2435.1 | 71.331.2435.1 |
| Size **24** high design for connector, **24pole + ground** | M 32 | 0 with cable gland | 144 | 52 | 76.5 | 1 | | 76.334.6435.0 | 76.335.6435.0 |
| | | 1 with threaded collar | 144 | 52 | 76.5 | 1 | | 76.334.6435.1 | 76.335.6435.1 |
| Size **48** for connector **48pole + ground** | M 32 | 0 with cable gland | 124 | 84 | 35 | 1 | 70.320.4828.0 | | |
| | | | 146 | 120 | 99 | 1 | | | 70.331.4835.0 |
| | | 1 with threaded collar | 146 | 120 | 99 | 1 | | | 70.331.4835.1 |
| | | 3 with strain relief | 146 | 120 | 99 | 1 | | | 70.331.4835.3 |
| | M 40 | 1 with threaded collar | 146 | 120 | 99 | 1 | | | |

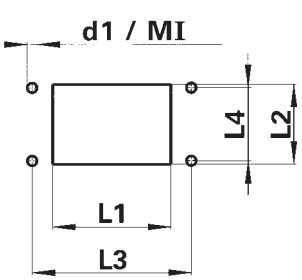


Mounting dimensions for open bottom housings

| Housing size | Cut-out (mm) | | Mounting holes (mm) | | | |
|---|---|---|---|---|---|---|
| | L1 | L2 | L3 | L4 | d1 (mm) | MI |
| **6** | 52 | 35 | 70 | 32 | 4.3 | M 4 |
| **10** | 65 | 35 | 83 | 32 | 4.3 | M 4 |
| **16** | 85.5 | 35 | 103 | 32 | 4.3 | M 4 |
| **24** | 112 | 35 | 130 | 32 | 4.3 | M 4 |
| **48** | 117 | 81 | 148 | 70 | 6.4 | M 6 |

# revos

## Housing type e

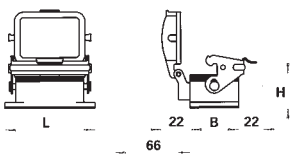


## Housing type f

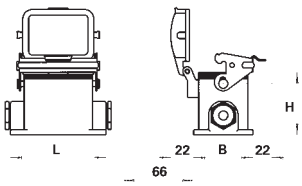


## Housing type g

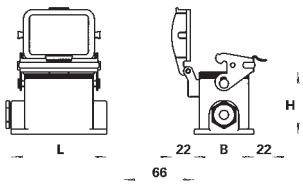


## Housing type h

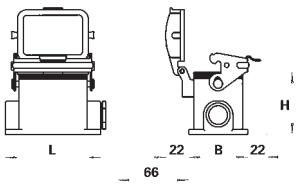


| Housing closed bottom with cable gland at the bottom<br>Housing type d | Housing open bottom with protective cover<br>Housing type e | Housing closed bottom with two cable glands and protective cover<br>Housing type f | Housing closed bottom with cable gland on the left and protective cover<br>Housing type g | Housing closed bottom with cable gland on the right and protective cover<br>Housing type h | Housing closed bottom with cable gland at the bottom and protective cover<br>Housing type i |
|---|---|---|---|---|---|
| | | | | | |
| Part no. | Part no. | Part no. | Part no. | Part no. | Part no. |
| 70.333.0635.0<br>70.333.0635.1 | 70.325.0628.0 | 70.340.0635.0<br>70.340.0635.1 | 70.341.0635.0<br>70.341.0635.1 | 70.342.0635.0<br>70.342.0635.1 | 70.343.0635.0<br>70.343.0635.1 |
| 71.333.1035.0<br>71.333.1035.1 | 71.325.1028.0 | 71.340.1035.0<br>71.340.1035.1 | 71.341.1035.0<br>71.341.1035.1 | 71.342.1035.0<br>71.342.1035.1 | 71.343.1035.0<br>71.343.1035.1 |
| 71.333.1635.0<br>71.333.1635.1 | 71.325.1628.0 | 71.340.1635.0<br>71.340.1635.1 | 71.341.1635.0<br>71.341.1635.1 | 71.342.1635.0<br>71.342.1635.1 | 71.343.1635.0<br>71.343.1635.1 |
| 76.337.4035.0<br>76.337.4035.1 | | 76.344.4035.0<br>76.344.4035.1 | 76.345.4035.0<br>76.345.4035.1 | 76.346.4035.0<br>76.346.4035.1 | 76.347.4035.0<br>76.347.4035.1 |
| 71.333.2435.0<br>71.333.2435.1 | 71.325.2428.0 | 71.340.2435.0<br>71.340.2435.1 | 71.341.2435.0<br>71.341.2435.1 | 71.342.2435.0<br>71.342.2435.1 | 71.343.2435.0<br>71.343.2435.1 |
| 76.337.6435.0<br>76.337.6435.1 | | 76.344.6435.0<br>76.344.6435.1 | 76.345.6435.0<br>76.345.6435.1 | 76.346.6435.0<br>76.346.6435.1 | 76.347.6435.0<br>76.347.6435.1 |
| | 70.325.4828.0 | | 70.341.4835.1<br>70.341.4835.3 | | |
| | | | 70.344.4835.1 | | |

| Housing size | L5 (mm) | L6 (mm) | d2 (mm) | MII |
|---|---|---|---|---|
| **6** | 70 | 40 | 5.5 | M 5 |
| **10** | 82 | 40 | 5.5 | M 5 |
| **16** | 105 | 45 | 5.5 | M 5 |
| **24** | 132 | 45 | 5.5 | M 5 |
| **48** | 111 | 106 | 6.5 | M 6 |

Mounting dimensions for closed-bottom housings

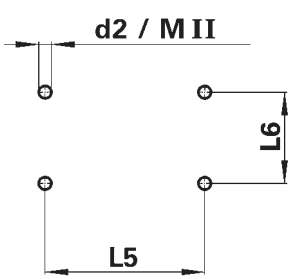

# Industrial Multipole Connectors
# Hoods with double locking levers

## revos BASIC

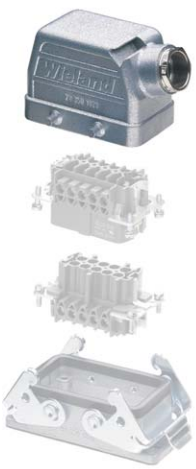

**Hood type A**

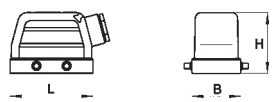


**Hood type B**

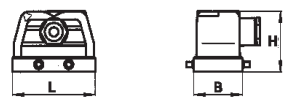


**Hood type C**

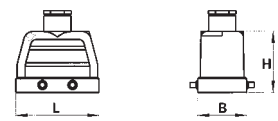


**Degree of protection IP 55**
**Degree of protection IP 65** with matching cable glands (see accessories)

For inserts: **600 V** UL/CSA

For inserts: **500 V** IEC 61 984

| Number of poles | Thread | Gland type | Dimensions in mm | L | W | H | Std. pack |
|---|---|---|---|---|---|---|---|
| Size **10**<br>for connector<br>**10pole + ground** | M 20 | 0 with cable gland<br>1 with threaded collar<br>2 with intermediate support<br>3 with strain relief | | 73 | 43 | 53 | 1 |
| | M 25 | 0 with cable gland<br>1 with threaded collar<br>2 with intermediate support<br>3 with strain relief | | 73 | 43 | 53 | 1 |
| Size **16**<br>for connector<br>**16pole + ground** | M 25 | 0 with cable gland<br>1 with threaded collar<br>2 with intermediate support<br>3 with strain relief | | 93.5 | 43 | 60 | 1 |
| | M 32 | 0 with cable gland<br>1 with threaded collar<br>2 with intermediate support<br>3 with strain relief | | 93.5 | 43 | 60 | 1 |
| Size **24**<br>for connector<br>**24pole + ground** | M 25 | 0 with cable gland<br>1 with threaded collar<br>2 with intermediate support<br>3 with strain relief | | 120 | 43 | 70 | 1 |
| | M 32 | 0 with cable gland<br>1 with threaded collar<br>2 with intermediate support<br>3 with strain relief | | 120 | 43 | 70 | 1 |
| Size **32**<br>for connector<br>**32pole + ground** | M 32 | 0 with cable gland<br>1 with threaded collar<br>2 with intermediate support<br>3 with strain relief | | 93.5 | 82.5 | 94 | 1 |
| | M 40 | 1 with threaded collar<br>2 with intermediate support | | 93.5 | 82.5 | 94 | 1 |

# revos

**Hood type D**

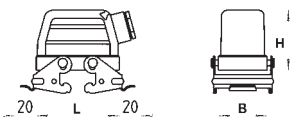


**Hood type E**

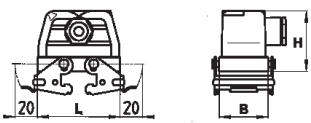


**Hood type F**

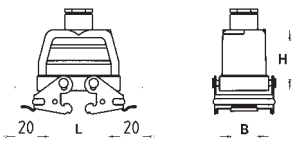


| Hood<br><br>Hood type A | Hood<br>(not suited for female/male inserts with spring connection)<br><br>for 24pole = 2 x M 25<br><br>Hood type B | Hood<br><br>Hood type C | Hood<br>with locking levers<br><br>Hood type D | Hood<br>with locking levers<br>(not suited for female/male inserts with spring connection)<br><br>for 24pole = 2 x M 25<br><br>Hood type E | Hood<br>with locking levers<br><br>Hood type F |
|---|---|---|---|---|---|
| | | | | | |
| Part no. | Part no. | Part no. | Part no. | Part no. | Part no. |
| 70.350.1035.0<br>70.350.1035.1<br>70.350.1035.2<br>70.350.1035.3 | 70.351.1035.0<br>70.351.1035.1<br>70.351.1035.2<br>70.351.1035.3 | 70.352.1035.0<br>70.352.1035.1<br>70.352.1035.2<br>70.352.1035.3 | 70.355.1035.0<br>70.355.1035.1<br>70.355.1035.2<br>70.355.1035.3 | 70.356.1035.0<br>70.356.1035.1<br>70.356.1035.2<br>70.356.1035.3 | 70.357.1035.0<br>70.357.1035.1<br>70.357.1035.2<br>70.357.1035.3 |
| 70.353.1035.0<br>70.353.1035.1<br>70.353.1035.2<br>70.353.1035.3 | | 70.354.1035.0<br>70.354.1035.1<br>70.354.1035.2<br>70.354.1035.3 | 70.358.1035.0<br>70.358.1035.1<br>70.358.1035.2<br>70.358.1035.3 | | 70.359.1035.0<br>70.359.1035.1<br>70.359.1035.2<br>70.359.1035.3 |
| 70.350.1635.0<br>70.350.1635.1<br>70.350.1635.2<br>70.350.1635.3 | 70.351.1635.0<br>70.351.1635.1<br>70.351.1635.2<br>70.351.1635.3 | 70.352.1635.0<br>70.352.1635.1<br>70.352.1635.2<br>70.352.1635.3 | 70.355.1635.0<br>70.355.1635.1<br>70.355.1635.2<br>70.355.1635.3 | 70.356.1635.0<br>70.356.1635.1<br>70.356.1635.2<br>70.356.1635.3 | 70.357.1635.0<br>70.357.1635.1<br>70.357.1635.2<br>70.357.1635.3 |
| 70.353.1635.0<br>70.353.1635.1<br>70.353.1635.2<br>70.353.1635.3 | | 70.354.1635.0<br>70.354.1635.1<br>70.354.1635.2<br>70.354.1635.3 | 70.358.1635.0<br>70.358.1635.1<br>70.358.1635.2<br>70.358.1635.3 | | 70.359.1635.0<br>70.359.1635.1<br>70.359.1635.2<br>70.359.1635.3 |
| 70.350.2435.0<br>70.350.2435.1<br>70.350.2435.2<br>70.350.2435.3 | 70.351.2435.0<br>70.351.2435.1<br>70.351.2435.2<br>70.351.2435.3 | 70.352.2435.0<br>70.352.2435.1<br>70.352.2435.2<br>70.352.2435.3 | 70.355.2435.0<br>70.355.2435.1<br>70.355.2435.2<br>70.355.2435.3 | 70.356.2435.0<br>70.356.2435.1<br>70.356.2435.2<br>70.356.2435.3 | 70.357.2435.0<br>70.357.2435.1<br>70.357.2435.2<br>70.357.2435.3 |
| 70.353.2435.0<br>70.353.2435.1<br>70.353.2435.2<br>70.353.2435.3 | | 70.354.2435.0<br>70.354.2435.1<br>70.354.2435.2<br>70.354.2435.3 | 70.358.2435.0<br>70.358.2435.1<br>70.358.2435.2<br>70.358.2435.3 | | 70.359.2435.0<br>70.359.2435.1<br>70.359.2435.2<br>70.359.2435.3 |
| 70.350.3235.0<br>70.350.3235.1<br>70.350.3235.2<br>70.350.3235.3 | | 70.352.3235.0<br>70.352.3235.1<br>70.352.3235.2<br>70.352.3235.3 | | | |
| 70.353.3235.1<br>70.353.3235.2 | | 70.354.3235.1<br>70.354.3235.2 | | | |

# Industrial Multipole Connectors
## Housings with double locking levers

# revos BASIC

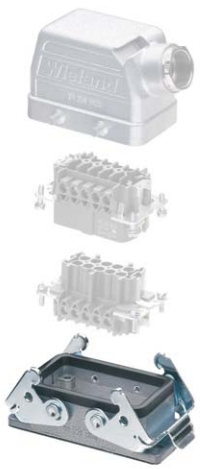

### Housing type a

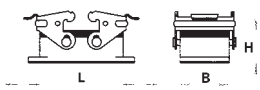


### Housing type b

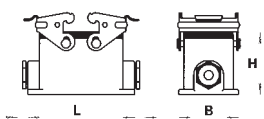


### Housing type c

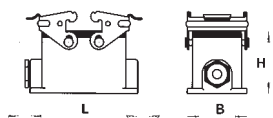


### Housing type d

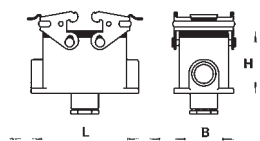


### Housing type i

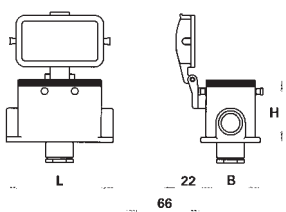


**Degree of protection IP 55**
**Degree of protection IP 65** with matching cable glands (see accessories)

For inserts: **600 V** UL/CSA

For inserts: **500 V** IEC 61 984

| Number of poles | Thread | Gland type | L | W | H | Std. pack | Housing open bottom<br>Housing type a<br>Part no. | Housing closed bottom with two cable glands<br>Housing type b<br>Part no. | Housing closed bottom with one cable gland on the left<br>Housing type c<br>Part no. |
|---|---|---|---|---|---|---|---|---|---|
| | | | | | | | | | |
| Size **10**<br>for connector<br>**10pole + ground** | M 20 | | 93 | 43 | 28 | 1 | 70.320.1028.0 | | |
| | | 0 with cable gland | 94 | 52 | 54.5 | 1 | | 70.330.1035.0 | 70.331.1035.0 |
| | | 1 with threaded collar | 94 | 52 | 54.5 | 1 | | 70.330.1035.1 | 70.331.1035.1 |
| Size **16**<br>for connector<br>**16pole + ground** | M 25 | | 113 | 43 | 28 | 1 | 70.320.1628.0 | | |
| | | 0 with cable gland | 117 | 52 | 56.5 | 1 | | 70.330.1635.0 | 70.331.1635.0 |
| | | 1 with threaded collar | 117 | 52 | 56.5 | 1 | | 70.330.1635.1 | 70.331.1635.1 |
| Size **16**<br>for connector<br>high design<br>**16pole + ground** | M 32 | 0 with cable gland | 117 | 52 | 76.5 | 1 | | 73.334.4035.0 | 73.335.4035.0 |
| | | 1 with threaded collar | 117 | 52 | 76.5 | 1 | | 73.334.4035.1 | 73.335.4035.1 |
| Size **24**<br>for connector<br>**24pole + ground** | M 25 | | 140 | 43 | 28 | 1 | 70.320.2428.0 | | |
| | | 0 with cable gland | 144 | 52 | 56.5 | 1 | | 70.330.2435.0 | 70.331.2435.0 |
| | | 1 with threaded collar | 144 | 52 | 56.5 | 1 | | 70.330.2435.1 | 70.331.2435.1 |
| Size **24**<br>for connector<br>high design<br>**24pole + ground** | M 32 | 0 with cable gland | 144 | 52 | 76.5 | 1 | | 73.334.6435.0 | 73.335.6435.0 |
| | | 1 with threaded collar | 144 | 52 | 76.5 | 1 | | 73.334.6435.1 | 73.335.6435.1 |
| Size **32**<br>for connector<br>**32pole + ground** | | | 124 | 84 | 35 | 1 | 70.320.3228.0 | | |

Mounting dimensions for open-bottom housings

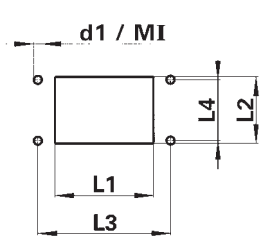


| Housing size | Cut-out (mm) | | Mounting holes (mm) | | | |
|---|---|---|---|---|---|---|
| | L1 | L2 | L3 | L4 | d1 (mm) | MI |
| **10** | 65 | 35 | 83 | 32 | 4.3 | M 4 |
| **16** | 85.5 | 35 | 103 | 32 | 4.3 | M 4 |
| **24** | 112 | 35 | 130 | 32 | 4.3 | M 4 |
| **32** | 117 | 81 | 148 | 70 | 6.4 | M 6 |

# revos

**Housing type e**

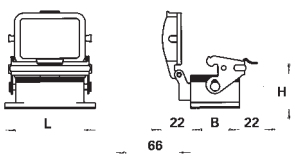


**Housing type f**

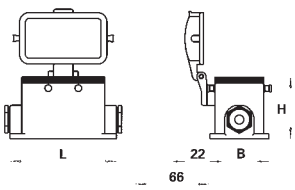


**Housing type g**

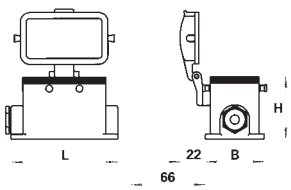


**Housing type h**

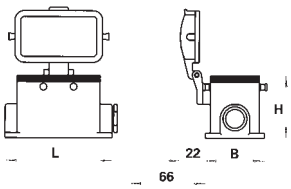


| Housing closed bottom with cable gland at the bottom | Housing open bottom with protective cover | Housing closed bottom with two cable glands and protective cover | Housing closed bottom with cable gland on the left and protective cover | Housing closed bottom with cable gland on the right and protective cover | Housing closed bottom with cable gland at the bottom and protective cover |
|---|---|---|---|---|---|
| Housing type d | Housing type e | Housing type f | Housing type g | Housing type h | Housing type i |
| | | | | | |
| Part no. | Part no. | Part no. | Part no. | Part no. | Part no. |
| 70.333.1035.0<br>70.333.1035.1 | 70.325.1028.0 | 70.340.1035.0<br>70.340.1035.1 | 70.341.1035.0<br>70.341.1035.1 | 70.342.1035.0<br>70.342.1035.1 | 70.343.1035.0<br>70.343.1035.1 |
| 70.333.1635.0<br>70.333.1635.1 | 70.325.1628.0 | 70.340.1635.0<br>70.340.1635.1 | 70.341.1635.0<br>70.341.1635.1 | 70.342.1635.0<br>70.342.1635.1 | 70.343.1635.0<br>70.343.1635.1 |
| 73.337.4035.0<br>73.337.4035.1 | | 73.344.4035.0<br>73.344.4035.1 | 73.345.4035.0<br>73.345.4035.1 | 73.346.4035.0<br>73.346.4035.1 | 73.347.4035.0<br>73.347.4035.1 |
| 70.333.2435.0<br>70.333.2435.1 | 70.325.2428.0 | 70.340.2435.0<br>70.340.2435.1 | 70.341.2435.0<br>70.341.2435.1 | 70.342.2435.0<br>70.342.2435.1 | 70.343.2435.0<br>70.343.2435.1 |
| 73.337.6435.0<br>73.337.6435.1 | | 73.344.6435.0<br>73.344.6435.1 | 73.345.6435.0<br>73.345.6435.1 | 73.346.6435.0<br>73.346.6435.1 | 73.347.6435.0<br>73.347.6435.1 |
| | | | | | |

Mounting dimensions for closed-bottom housings

| Housing size | L5 (mm) | L6 (mm) |
|---|---|---|
| **10** | 82 | 40 |
| **16** | 105 | 45 |
| **24** | 132 | 45 |

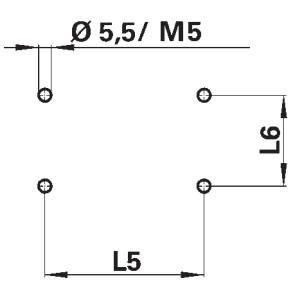

# revos BASIC

## Technical information

| | |
|---|---|
| **■ Approvals** | UL, CSA, MEEI, SEV |
| **■ Applicable standards** | IEC 61 984 |
| **■ Contact inserts** | |
| Rated current | 16 A |
| Rated voltage | 690/400 V |
| Nominal voltage accord. to UL | 600 V |
| Nominal voltage accord. to CSA | 600 V |
| Pole configurations | 3, 6, 10, 16,<br>20 (2x10), 26 (10/16),<br>32 (2x16) + ground |
| Screw connection | 0.5 – 2.5 $mm^2$ / 20 – 12 AWG |
| Degree of pollution | 3 |
| Temperature range | –40 to +110 °C |
| **■ Multipole adapter** | |
| Rated current | 16 A |
| Rated voltage | 500 V |
| Nominal voltage accord. to UL | 600 V |
| Nominal voltage accord. to CSA | 600 V |
| Pole configurations | 3, 6, 10 + ground |
| Screw connection | 0.5 – 4.0 $mm^2$ / 20 – 12 AWG |
| Degree of pollution | 3 |
| Temperature range | –40 to +110 °C |
| **■ Contacts** | |
| Material | copper alloy |
| Surface | tin-plated |
| **■ Hoods and housings** | |
| Material | die cast aluminum alloy |
| Surface | silver gray, silicon-free finish |
| Locking levers | zinc-plated steel |
| Gaskets | NBR |
| Temperature range | –40 to +110 °C |
| Degree of protection<br>accord. to DIN EN 60 529 | |
| with latched locking levers | IP 55 |
| with appropriate cable gland | IP 65 |

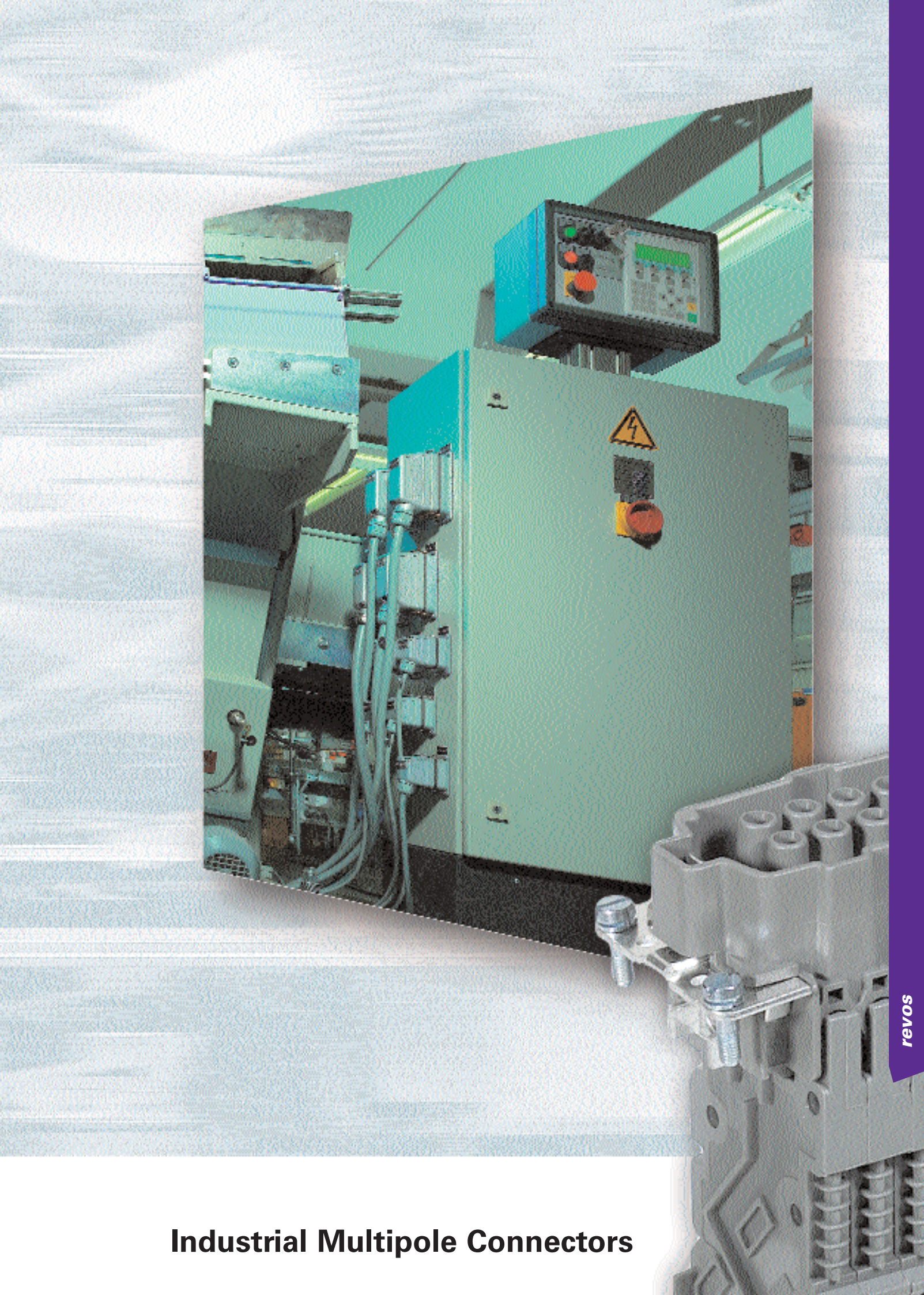

revos

# Industrial Multipole Connectors

# Industrial Multipole Connectors
## Female/male inserts and multipole adapter

# revos BASIC

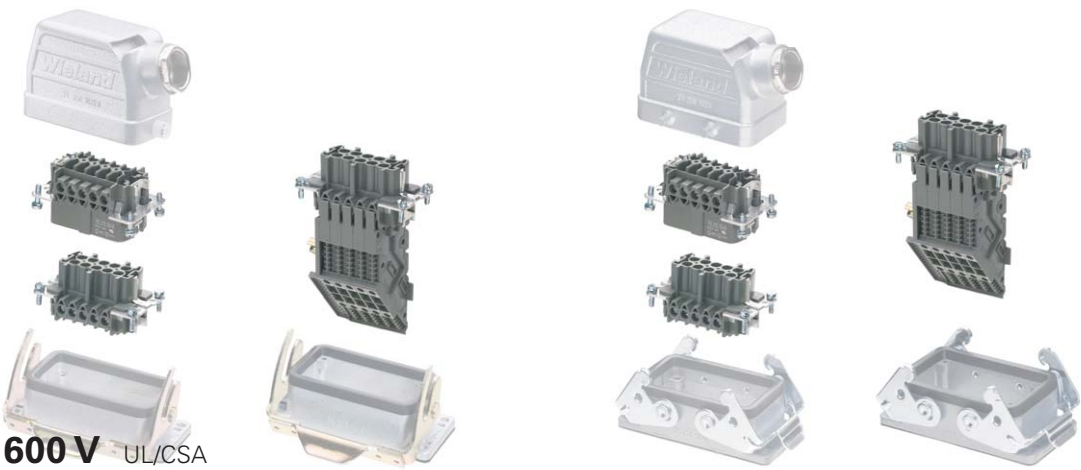

**600 V** UL/CSA

**690/400 V, 16 A** IEC 61 984

| | | Rated current | Cross section | Approvals | Wire strip length | Contacts | Std. pack |
|---|---|---|---|---|---|---|---|
| **Screw connection** | Female insert | 16 A | 0.5 – 2.5 mm² 20 – 12 AWG | | 7 mm | tin-plated | 10 |
| | Male insert | 16 A | 0.5 – 2.5 mm² 20 – 12 AWG | | 7 mm | tin-plated | 10 |
| **Screw connection** Multipole adapter long design (6 marking fields) | Female insert, ground right 500 V IEC 61 984 | 16 A | 0,5 – 4 mm² 20 – 12 AWG | | 12 mm | tin-plated | 10 |
| | Female insert, ground left | 16 A | 0.5 – 4 mm² 20 – 12 AWG | | 12 mm | tin-plated | 10 |
| | Male insert, ground right 500 V IEC 61 984 | 16 A | 0.5 – 4 mm² 20 – 12 AWG | | 12 mm | tin-plated | 10 |
| | Male insert, ground left | 16 A | 0.5 – 4 mm² 20 – 12 AWG | | 12 mm | tin-plated | 10 |
| **Screw connection** Multipole adapter short design (4 marking fields) | Female insert, ground right 500 V IEC 61 984 | 16 A | 0.5 – 4 mm² 20 – 12 AWG | | 12 mm | tin-plated | 10 |
| | Female insert, ground left | 16 A | 0.5 – 4 mm² 20 – 12 AWG | | 12 mm | tin-plated | 10 |
| | Male insert, ground right 500 V IEC 61 984 | 16 A | 0.5 – 4 mm² 20 – 12 AWG | | 12 mm | tin-plated | 10 |
| | Male insert, ground left | 16 A | 0.5 – 4 mm² 20 – 12 AWG | | 12 mm | tin-plated | 10 |
| **Spring connection** Multipole adapter short design (6 marking fields) | Female insert, ground right 500 V IEC 61 984 | 16 A | 0.5 – 2.5 mm² 20 – 12 AWG | | 9 mm | tin-plated | 10 |
| | Female insert, ground left | 16 A | 0.5 – 2.5 mm² 20 – 12 AWG | | 9 mm | tin-plated | 10 |
| | Male insert, ground right 500 V IEC 61 984 | 16 A | 0.5 – 2.5 mm² 20 – 12 AWG | | 9 mm | tin-plated | 10 |
| | Male insert, ground left | 16 A | 0.5 – 2.5 mm² 20 – 12 AWG | | 9 mm | tin-plated | 10 |

# revos

| 3pole + ground | 6pole + ground | 10pole + ground | 16pole + ground | 20pole + ground<br>2 x 10pole + ground | 26pole + ground<br>1 x 10pole + ground<br>1 x 16pole + ground | 32pole + ground<br>2 x 16pole + ground |
|---|---|---|---|---|---|---|
| Part no. | Part no. | Part no. | Part no. | Part no. | Part no. | Part no. |
| 70.400.0340.0 | 70.400.0640.0 | 70.400.1040.0 | 70.400.1640.0 | 70.400.2040.0 | 70.400.2640.0 | 70.400.3240.0 |
| 70.410.0340.0 | 70.410.0640.0 | 70.410.1040.0 | 70.410.1640.0 | 70.410.2040.0 | 70.410.2640.0 | 70.410.3240.0 |
| **Pole assignment**<br>3pole + ground | **Pole assignment**<br>6pole + ground | **Pole assignment**<br>10pole + ground | **Pole assignment**<br>16pole + ground | **Pole assignment**<br>20pole + ground | **Pole assignment**<br>26pole + ground | **Pole assignment**<br>32pole + ground |
| 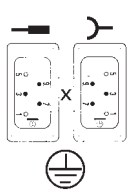 | 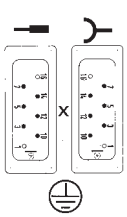 | 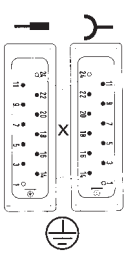 | 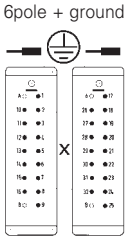 | 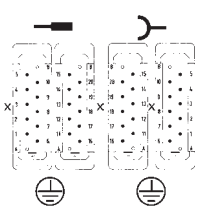 | 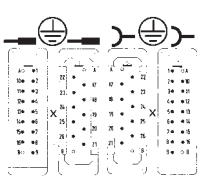 | 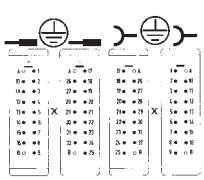 |
| X = switching contacts (2 shortened male pins) | | | | | | |
| 70.125.0353.3<br>70.120.0353.3 | 70.125.0653.3<br>70.120.0653.3 | 70.125.1053.3<br>70.120.1053.3 | 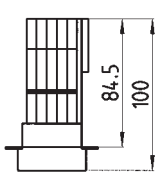 | | | |
| 70.135.0353.3<br>70.130.0353.3 | 70.135.0653.3<br>70.130.0653.3 | 70.135.1053.3<br>70.130.1053.3 | | | | |
| 70.125.0353.4<br>70.120.0353.4 | 70.125.0653.4<br>70.120.0653.4 | 70.125.1053.4<br>70.120.1053.4 | 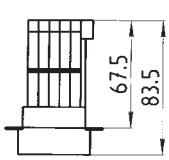 | | | |
| 70.135.0353.4<br>70.130.0353.4 | 70.135.0653.4<br>70.130.0653.4 | 70.135.1053.4<br>70.130.1053.4 | | | | |
| 70.126.0353.0<br>70.121.0353.0 | 70.126.0653.0<br>70.121.0653.0 | 70.126.1053.0<br>70.121.1053.0 | 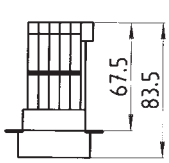 | | | |
| 70.136.0353.0<br>70.131.0353.0 | 70.136.0653.0<br>70.131.0653.0 | 70.136.1053.0<br>70.131.1053.0 | | | | |

# Industrial Multipole Connectors
# Hoods with a single locking lever

# revos BASIC

**Hood type A**

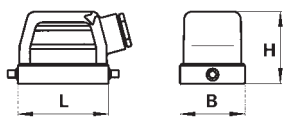


**Hood type B**

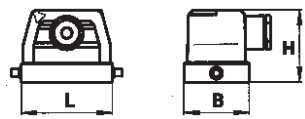


**Hood type C**

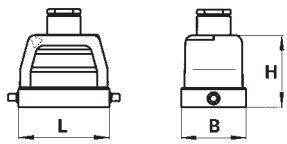


**Degree of protection IP 55**
**Degree of protection IP 65** with matching cable glands (see accessories)

For inserts: **600 V** UL/CSA

For inserts: **690/400 V** IEC 61 984

| Number of poles | Thread | Gland type | Dimensions in mm | L | W | H | Std. pack |
|---|---|---|---|---|---|---|---|
| Size **10**<br>for connector<br>**3pole + ground** | M 20 | 0 with cable gland<br>1 with threaded collar<br>2 with intermediate support<br>3 with strain relief | | 73 | 43 | 53 | 1 |
| | M 25 | 0 with cable gland<br>1 with threaded collar<br>2 with intermediate support<br>3 with strain relief | | 73 | 43 | 53 | |
| Size **16**<br>for connector<br>**6pole + ground** | M 25 | 0 with cable gland<br>1 with threaded collar<br>2 with intermediate support<br>3 with strain relief | | 93.5 | 43 | 60 | 1 |
| | M 32 | 0 with cable gland<br>1 with threaded collar<br>2 with intermediate support<br>3 with strain relief | | 93.5 | 43 | 60 | |
| Size **24**<br>for connector<br>**10-/ 16pole + ground** | M 25 | 0 with cable gland<br>1 with threaded collar<br>2 with intermediate support<br>3 with strain relief | | 120 | 43 | 70 | 1 |
| | M 32 | 0 with cable gland<br>1 with threaded collar<br>2 with intermediate support<br>3 with strain relief | | 120 | 43 | 70 | |
| Size **48**<br>for connector<br>**20-/26-/ 32pole + ground** | M 32 | 0 with cable gland<br>1 with threaded collar<br>2 with intermediate support<br>3 with strain relief | | 132 | 90 | 107 | 1 |
| | M 40 | 1 with threaded collar<br>2 with intermediate support | | 132 | 90 | 107 | 1 |

# revos

| Hood<br><br>Hood type A | Hood<br>for 24pole = 2 x M 25<br><br>Hood type B | Hood<br><br>Hood type C | |
|---|---|---|---|
| 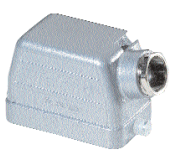 | | | |
| Part no. | Part no. | Part no. | |
| 77.350.1035.0<br>77.350.1035.1<br>77.350.1035.2<br>77.350.1035.3 | 77.351.1035.0<br>77.351.1035.1<br>77.351.1035.2<br>77.351.1035.3 | 77.352.1035.0<br>77.352.1035.1<br>77.352.1035.2<br>77.352.1035.3 | |
| 77.353.1035.0<br>77.353.1035.1<br>77.353.1035.2<br>77.353.1035.3 | | 77.354.1035.0<br>77.354.1035.1<br>77.354.1035.2<br>77.354.1035.3 | |
| 77.350.1635.0<br>77.350.1635.1<br>77.350.1635.2<br>77.350.1635.3 | 77.351.1635.0<br>77.351.1635.1<br>77.351.1635.2<br>77.351.1635.3 | 77.352.1635.0<br>77.352.1635.1<br>77.352.1635.2<br>77.352.1635.3 | |
| 77.353.1635.0<br>77.353.1635.1<br>77.353.1635.2<br>77.353.1635.3 | | 77.354.1635.0<br>77.354.1635.1<br>77.354.1635.2<br>77.354.1635.3 | |
| 77.350.2435.0<br>77.350.2435.1<br>77.350.2435.2<br>77.350.2435.3 | 77.351.2435.0<br>77.351.2435.1<br>77.351.2435.2<br>77.351.2435.3 | 77.352.2435.0<br>77.352.2435.1<br>77.352.2435.2<br>77.352.2435.3 | |
| 77.353.2435.0<br>77.353.2435.1<br>77.353.2435.2<br>77.353.2435.3 | | 77.354.2435.0<br>77.354.2435.1<br>77.354.2435.2<br>77.354.2435.3 | |
| 70.350.4835.0<br>70.350.4835.1<br>70.350.4835.2<br>70.350.4835.3 | | 70.352.4835.0<br>70.352.4835.1<br>70.352.4835.2<br>70.352.4835.3 | |
| 70.353.4835.1<br>70.353.4835.2 | | 70.354.4835.1<br>70.354.4835.2 | |
| | | | |

# Industrial Multipole Connectors
## Housings with a single locking lever

# revos BASIC

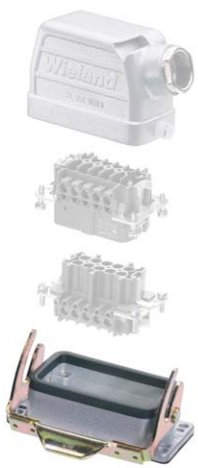

**Housing type a**

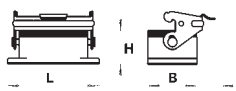


**Housing type b**

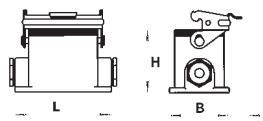


**Housing type c**

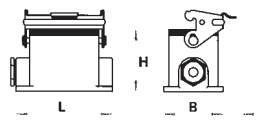


**Housing type d**

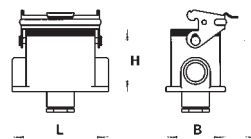


**Housing type i**

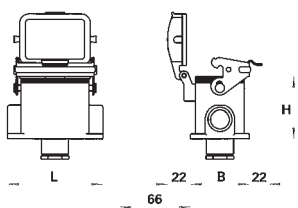


**Degree of protection IP 55**
**Degree of protection IP 65** with matching cable glands (see accessories)

For inserts: **600 V** UL/CSA

For inserts: **690/400 V** IEC 61 984

| Number of poles | Thread | Gland type | L | W | H | Std. pack | Housing open bottom<br>Housing type a<br>Part no. | Housing closed bottom with two cable glands<br>Housing type b<br>Part no. | Housing closed bottom with one cable gland on the left<br>Housing type c<br>Part no. |
|---|---|---|---|---|---|---|---|---|---|
| Size **10** | | | 93 | 43 | 28 | 1 | 77.320.1028.0 | | |
| for connector | M 20 | 0 with cable gland | 94 | 52 | 54.5 | 1 | | 77.330.1035.0 | 77.331.1035.0 |
| **3pole + ground** | | 1 with threaded collar | 94 | 52 | 54.5 | 1 | | 77.330.1035.1 | 77.331.1035.1 |
| Size **16** | | | 113 | 43 | 28 | 1 | 77.320.1628.0 | | |
| for connector | M 25 | 0 with cable gland | 117 | 52 | 56.5 | 1 | | 77.330.1635.0 | 77.331.1635.0 |
| **6pole + ground** | | 1 with threaded collar | 117 | 52 | 56.5 | 1 | | 77.330.1635.1 | 77.331.1635.1 |
| Size **24** | | | 140 | 43 | 28 | 1 | 77.320.2428.0 | | |
| for connector | M 25 | 0 with cable gland | 144 | 52 | 56.5 | 1 | | 77.330.2435.0 | 77.331.2435.0 |
| **10pole + ground/ 16pole + ground** | | 1 with threaded collar | 144 | 52 | 56.5 | 1 | | 77.330.2435.1 | 77.331.2435.1 |
| Size **48** | | | 165 | 90 | 44 | 1 | 70.320.4828.0 | | |
| for connector | M32 | 0 with cable gland | 146 | 120 | 99 | 1 | | | 70.331.4835.0 |
| **20-/26-/ 32pole + ground** | | 1 with threaded collar | 146 | 120 | 99 | 1 | | | 70.331.4835.1 |
| | | 3 with strain relief | 146 | 120 | 99 | 1 | | | 70.331.4835.3 |
| | M40 | 1 with threaded collar | 146 | 120 | 99 | 1 | | | |

Mounting dimensions for open-bottom housings

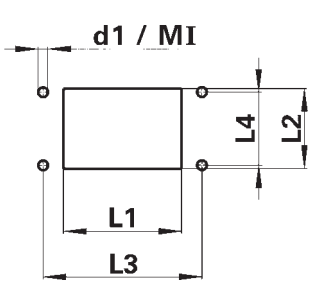


| Housing size | Cut-out (mm) | | Mounting holes (mm) | | | |
|---|---|---|---|---|---|---|
| | L1 | L2 | L3 | L4 | d1 (mm) | MI |
| **10** | 65 | 35 | 83 | 32 | 4.3 | M 4 |
| **16** | 85.5 | 35 | 103 | 32 | 4.3 | M 4 |
| **24** | 112 | 35 | 130 | 32 | 4.3 | M 4 |
| **48** | 117 | 81 | 148 | 70 | 6.4 | M 6 |

# revos

## Housing type e

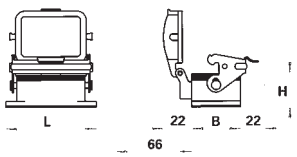


## Housing type f

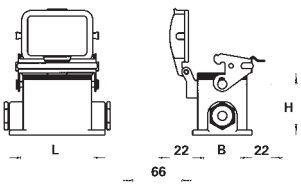


## Housing type g

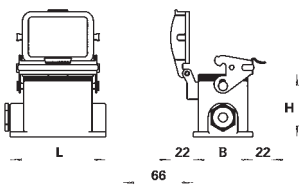


## Housing type h

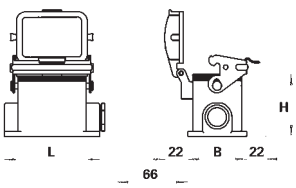


| Housing closed bottom with cable gland at the bottom<br>Housing type d | Housing open bottom with protective cover<br>Housing type e | Housing closed bottom with two cable glands and protective cover<br>Housing type f | Housing closed bottom with cable gland on the left and protective cover<br>Housing type g | Housing closed bottom with cable gland on the right and protective cover<br>Housing type h | Housing closed bottom with cable gland at the bottom and protective cover<br>Housing type i |
|---|---|---|---|---|---|
| | | | | | |
| Part no. | Part no. | Part no. | Part no. | Part no. | Part no. |
| 77.333.1035.0<br>77.333.1035.1 | 77.325.1028.0 | 77.340.1035.0<br>77.340.1035.1 | 77.341.1035.0<br>77.341.1035.1 | 77.342.1035.0<br>77.342.1035.1 | 77.343.1035.0<br>77.343.1035.1 |
| 77.333.1635.0<br>77.333.1635.1 | 77.325.1628.0 | 77.340.1635.0<br>77.340.1635.1 | 77.341.1635.0<br>77.341.1635.1 | 77.342.1635.0<br>77.342.1635.1 | 77.343.1635.0<br>77.343.1635.1 |
| 77.333.2435.0<br>77.333.2435.1 | 77.325.2428.0 | 77.340.2435.0<br>77.340.2435.1 | 77.341.2435.0<br>77.341.2435.1 | 77.342.2435.0<br>77.342.2435.1 | 77.343.2435.0<br>77.343.2435.1 |
| | 70.325.4828.0 | | 70.341.4835.1<br>70.341.4835.3 | | |
| | | | 70.344.4835.1 | | |

Mounting dimensions for closed-bottom housings

| Housing size | L5 (mm) | L6 (mm) | d2 (mm) | MII |
|---|---|---|---|---|
| **10** | 82 | 40 | 5.5 | M 5 |
| **16** | 105 | 45 | 5.5 | M 5 |
| **24** | 132 | 45 | 5.5 | M 5 |
| **48** | 111 | 106 | 6.5 | M 6 |

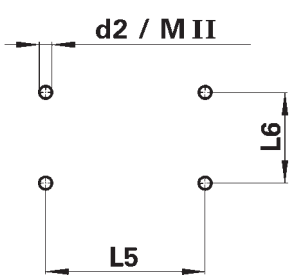

# Industrial Multipole Connectors
# Hoods with double locking levers

## revos BASIC

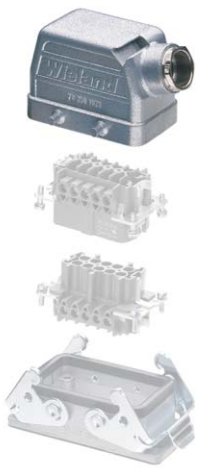

**Hood type A**

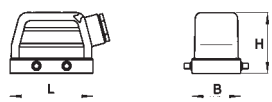


**Hood type B**

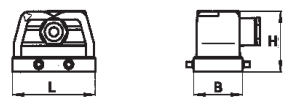


**Hood type C**

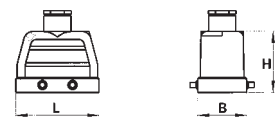


**Degree of protection IP 55**
**Degree of protection IP 65** with matching cable glands

For inserts: **600 V** UL/CSA

For inserts: **690/400 V** IEC 61 984

| Number of poles | Thread | Gland type | Dimensions in mm | L | W | H | Std. pack |
|---|---|---|---|---|---|---|---|
| Size **10**<br>for connector<br>**3pole + ground** | M 20 | 0 with cable gland<br>1 with threaded collar<br>2 with intermediate support<br>3 with strain relief | | 73 | 43 | 53 | 1 |
| | M 25 | 0 with cable gland<br>1 with threaded collar<br>2 with intermediate support<br>3 with strain relief | | 73 | 43 | 53 | |
| Size **16**<br>for connector<br>**6pole + ground** | M 25 | 0 with cable gland<br>1 with threaded collar<br>2 with intermediate support<br>3 with strain relief | | 93.5 | 43 | 60 | 1 |
| | M 32 | 0 with cable gland<br>1 with threaded collar<br>2 with intermediate support<br>3 with strain relief | | 93.5 | 43 | 60 | |
| Size **24**<br>for connector<br>**10-/**<br>**16pole + ground** | M 25 | 0 with cable gland<br>1 with threaded collar<br>2 with intermediate support<br>3 with strain relief | | 120 | 43 | 70 | 1 |
| | M 32 | 0 with cable gland<br>1 with threaded collar<br>2 with intermediate support<br>3 with strain relief | | 120 | 43 | 70 | 1 |

# revos

**Hood type D**

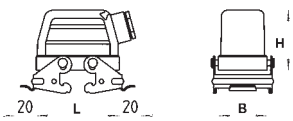


**Hood type E**

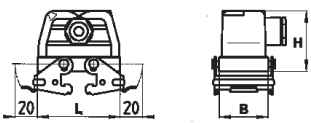


**Hood type F**

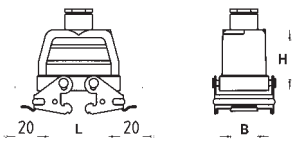


| Hood<br><br>Hood type A | Hood<br>for 24pole = 2 x M 25<br>Hood type B | Hood<br><br>Hood type C | Hood<br>with locking levers<br>Hood type D | Hood<br>with locking levers<br>for 24pole = 2 x M 25<br>Hood type E | Hood<br>with locking levers<br><br>Hood type F |
|---|---|---|---|---|---|
| | | | | | |
| Part no. | Part no. | Part no. | Part no. | Part no. | Part no. |
| 72.350.1035.0<br>72.350.1035.1<br>72.350.1035.2<br>72.350.1035.3 | 72.351.1035.0<br>72.351.1035.1<br>72.351.1035.2<br>72.351.1035.3 | 72.352.1035.0<br>72.352.1035.1<br>72.352.1035.2<br>72.352.1035.3 | 72.355.1035.0<br>72.355.1035.1<br>72.355.1035.2<br>72.355.1035.3 | 72.356.1035.0<br>72.356.1035.1<br>72.356.1035.2<br>72.356.1035.3 | 72.357.1035.0<br>72.357.1035.1<br>72.357.1035.2<br>72.357.1035.3 |
| 72.353.1035.0<br>72.353.1035.1<br>72.353.1035.2<br>72.353.1035.3 | | 72.354.1035.0<br>72.354.1035.1<br>72.354.1035.2<br>72.354.1035.3 | 72.358.1035.0<br>72.358.1035.1<br>72.358.1035.2<br>72.358.1035.3 | | 72.359.1035.0<br>72.359.1035.1<br>72.359.1035.2<br>72.359.1035.3 |
| 72.350.1635.0<br>72.350.1635.1<br>72.350.1635.2<br>72.350.1635.3 | 72.351.1635.0<br>72.351.1635.1<br>72.351.1635.2<br>72.351.1635.3 | 72.352.1635.0<br>72.352.1635.1<br>72.352.1635.2<br>72.352.1635.3 | 72.355.1635.0<br>72.355.1635.1<br>72.355.1635.2<br>72.355.1635.3 | 72.356.1635.0<br>72.356.1635.1<br>72.356.1635.2<br>72.356.1635.3 | 72.357.1635.0<br>72.357.1635.1<br>72.357.1635.2<br>72.357.1635.3 |
| 72.353.1635.0<br>72.353.1635.1<br>72.353.1635.2<br>72.353.1635.3 | | 72.354.1635.0<br>72.354.1635.1<br>72.354.1635.2<br>72.354.1635.3 | 72.358.1635.0<br>72.358.1635.1<br>72.358.1635.2<br>72.358.1635.3 | | 72.359.1635.0<br>72.359.1635.1<br>72.359.1635.2<br>72.359.1635.3 |
| 72.350.2435.0<br>72.350.2435.1<br>72.350.2435.2<br>72.350.2435.3 | 72.351.2435.0<br>72.351.2435.1<br>72.351.2435.2<br>72.351.2435.3 | 72.352.2435.0<br>72.352.2435.1<br>72.352.2435.2<br>72.352.2435.3 | 72.355.2435.0<br>72.355.2435.1<br>72.355.2435.2<br>72.355.2435.3 | 72.356.2435.0<br>72.356.2435.1<br>72.356.2435.2<br>72.356.2435.3 | 72.357.2435.0<br>72.357.2435.1<br>72.357.2435.2<br>72.357.2435.3 |
| 72.353.2435.0<br>72.353.2435.1<br>72.353.2435.2<br>72.353.2435.3 | | 72.354.2435.0<br>72.354.2435.1<br>72.354.2435.2<br>72.354.2435.3 | 72.358.2435.0<br>72.358.2435.1<br>72.358.2435.2<br>72.358.2435.3 | | 72.359.2435.0<br>72.359.2435.1<br>72.359.2435.2<br>72.359.2435.3 |

# Industrial Multipole Connectors
# Housings with double locking levers

## revos BASIC

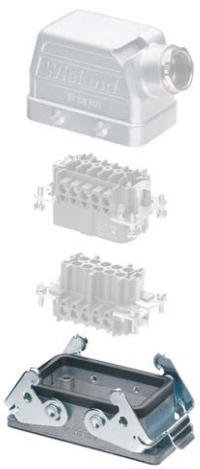

**Hood type a**

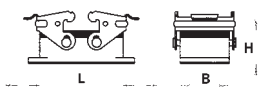


**Hood type b**

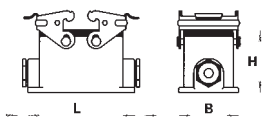


**Hood type c**

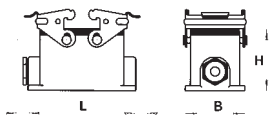


**Hood type d**

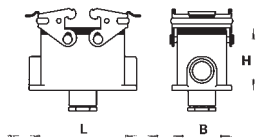


**Hood type i**

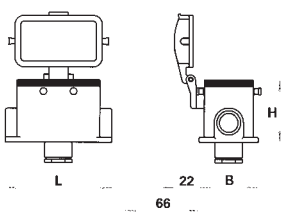


**Degree of protection IP 55**
**Degree of protection IP 65** with matching cable glands (see accessories)

For inserts: **600 V** UL/CSA

For inserts: **690/400 V** IEC 61 984

| Number of poles | Thread | Gland type | L | W | H | Std. pack | Housing open bottom<br>Housing type a<br> Part no. | Housing closed bottom with two cable glands<br>Housing type b<br> Part no. | Housing closed bottom with one cable gland on the left<br>Housing type c<br> Part no. |
|---|---|---|---|---|---|---|---|---|---|
| Size **10** | | | 93 | 43 | 28 | 1 | 72.320.1028.0 | | |
| for connector | M 20 | 0 with cable gland | 94 | 52 | 54.5 | 1 | | 72.330.1035.0 | 72.331.1035.0 |
| **3pole + ground** | | 1 with threaded collar | 94 | 52 | 54.5 | 1 | | 72.330.1035.1 | 72.331.1035.1 |
| Size **16** | | | 113 | 43 | 28 | 1 | 72.320.1628.0 | | |
| for connector | M 25 | 0 with cable gland | 117 | 52 | 56.5 | 1 | | 72.330.1635.0 | 72.331.1635.0 |
| **6pole + ground** | | 1 with threaded collar | 117 | 52 | 56.5 | 1 | | 72.330.1635.1 | 72.331.1635.1 |
| Size **24** | | | 140 | 43 | 28 | 1 | 72.320.2428.0 | | |
| for connector | M 25 | 0 with cable gland | 144 | 52 | 56.5 | 1 | | 72.330.2435.0 | 72.331.2435.0 |
| **10-/ 16pole + ground** | | 1 with threaded collar | 144 | 52 | 56.5 | 1 | | 72.330.2435.1 | 72.331.2435.1 |

Mounting dimensions for open-bottom housings

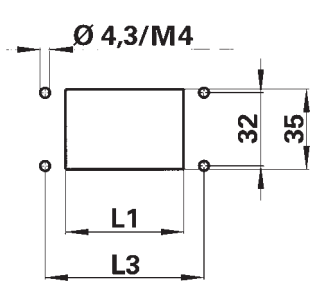


| Housing size | L1 (mm) | L3 (mm) |
|---|---|---|
| **10** | 65 | 83 |
| **16** | 85.5 | 103 |
| **24** | 112 | 130 |

# revos

## Hood type e

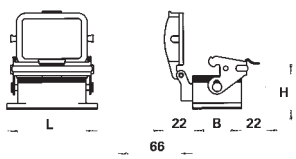


## Hood type f

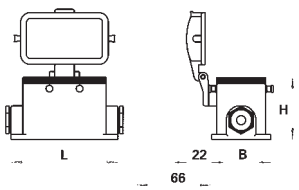


## Hood type g

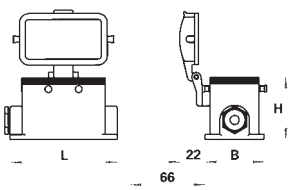


## Hood type h

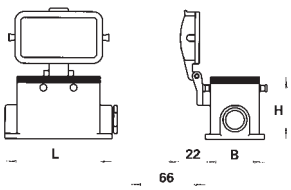


| Housing closed bottom with cable gland at the bottom<br>Housing type d | Housing open bottom with protective cover<br>Housing type e | Housing closed bottom with two cable glands and protective cover<br>Housing type f | Housing closed bottom with cable gland on the left and protective cover<br>Housing type g | Housing closed bottom with cable gland on the right and protective cover<br>Housing type h | Housing closed bottom with cable gland at the bottom and protective cover<br>Housing type i |
|---|---|---|---|---|---|
| | | | | | |
| Part no. | Part no. | Part no. | Part no. | Part no. | Part no. |
| 72.333.1035.0<br>72.333.1035.1 | 72.325.1028.0 | 72.340.1035.0<br>72.340.1035.1 | 72.341.1035.0<br>72.341.1035.1 | 72.342.1035.0<br>72.342.1035.1 | 72.343.1035.0<br>72.343.1035.1 |
| 72.333.1635.0<br>72.333.1635.1 | 72.325.1628.0 | 72.340.1635.0<br>72.340.1635.1 | 72.341.1635.0<br>72.341.1635.1 | 72.342.1635.0<br>72.342.1635.1 | 72.343.1635.0<br>72.343.1635.1 |
| 72.333.2435.0<br>72.333.2435.1 | 72.325.2428.0 | 72.340.2435.0<br>72.340.2435.1 | 72.341.2435.0<br>72.341.2435.1 | 72.342.2435.0<br>72.342.2435.1 | 72.343.2435.0<br>72.343.2435.1 |

| Housing size | L5 (mm) | L6 (mm) |
|---|---|---|
| **10** | 82 | 40 |
| **16** | 105 | 45 |
| **24** | 132 | 45 |

Mounting dimensions for closed-bottom housings

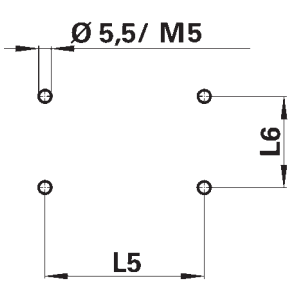

# revos BASIC

## Technical information

| | |
|---|---|
| **■ Approvals** | UL, CSA, MEEI, SEV |
| **■ Applicable standards** | IEC 61 984 |
| **■ Contact inserts** | |
| Rated current | 16 A |
| Rated voltage | 690 V |
| Nominal voltage accord. to UL | 600 V |
| Nominal voltage accord. to CSA | 600 V |
| Pole configurations | 6-, 10-, 16-, 24-, 32 (2x16), 48 (2x24), + ground |
| Screw connection | 0.5 – 2.5 $mm^2$ / 20 – 12 AWG |
| Crimp connection | 0.5 – 4.0 $mm^2$ / 20 – 12 AWG |
| Degree of pollution | 3 |
| Temperature range | –40 to +110 °C |
| **■ Multipole adapter** | |
| Rated current | 16 A |
| Rated voltage | 500 V |
| Nominal voltage accord. to UL | 600 V |
| Nominal voltage accord. to CSA | 600 V |
| Pole configurations | 6, 10, 16, 24, + ground |
| Screw connection | 0.5 – 4.0 $mm^2$ / 20 – 12 AWG |
| Spring connection | 0.5 – 2.5 $mm^2$ / 20 – 12 AWG |
| Degree of pollution | 3 |
| Temperature range | –40 to +110 °C |
| **■ Contacts** | |
| Material | copper alloy |
| Surface (screw, crimp, multipole adapter contacts) | tin-plated |
| Surface (crimp contacts) | gold-plated |
| Surface (crimp contacts) | silver-plated |
| **■ Hoods and housings** | |
| Material | die cast aluminum alloy |
| Surface | silver gray, silicon-free finish |
| Locking levers | zinc-plated steel |
| Gaskets | NBR |
| Temperature range | –40 to +110 °C |
| Degree of protection accord. to DIN EN 60 529 | |
| with latched locking levers | IP 55 |
| with appropriate cable gland | IP 65 |

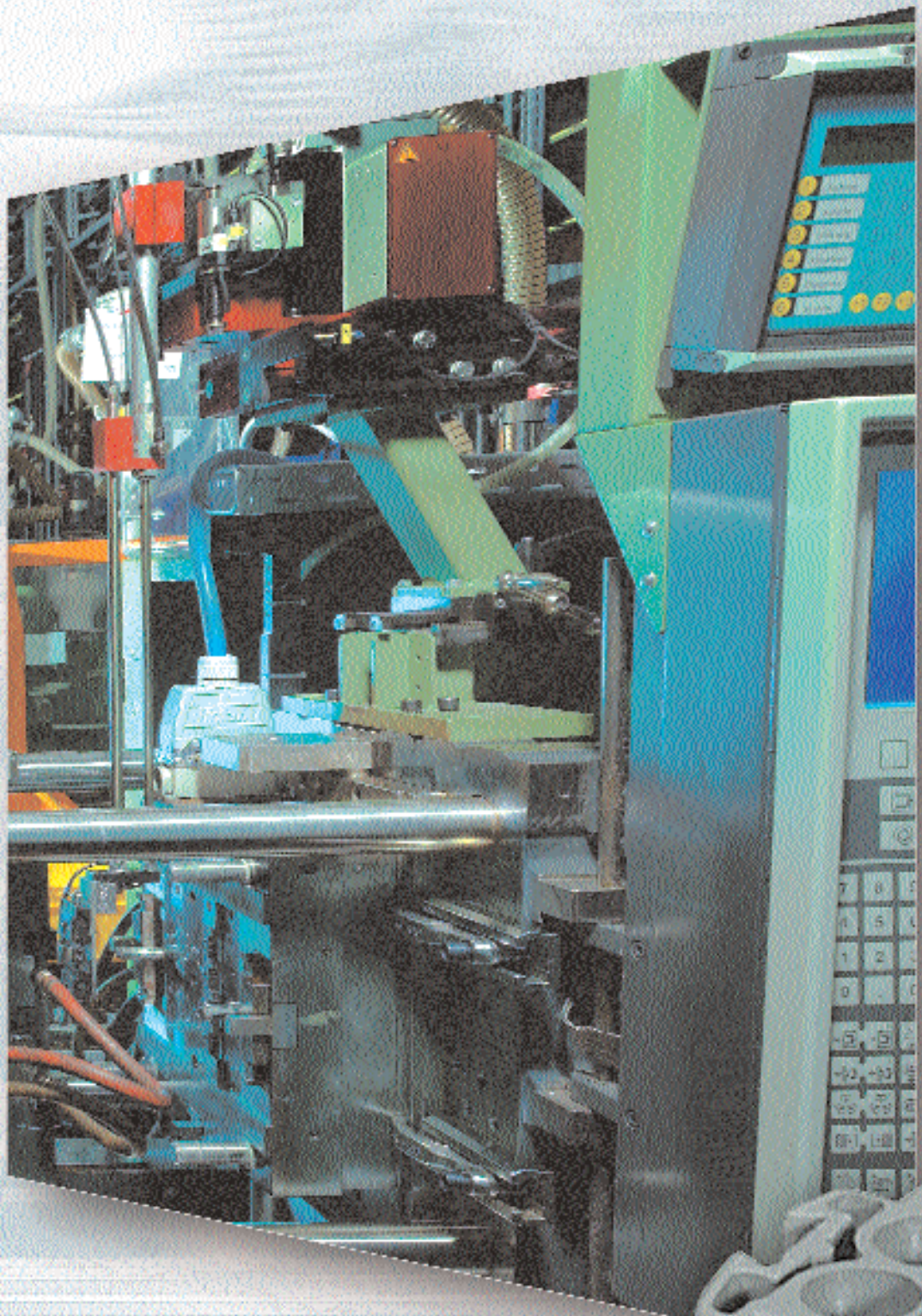

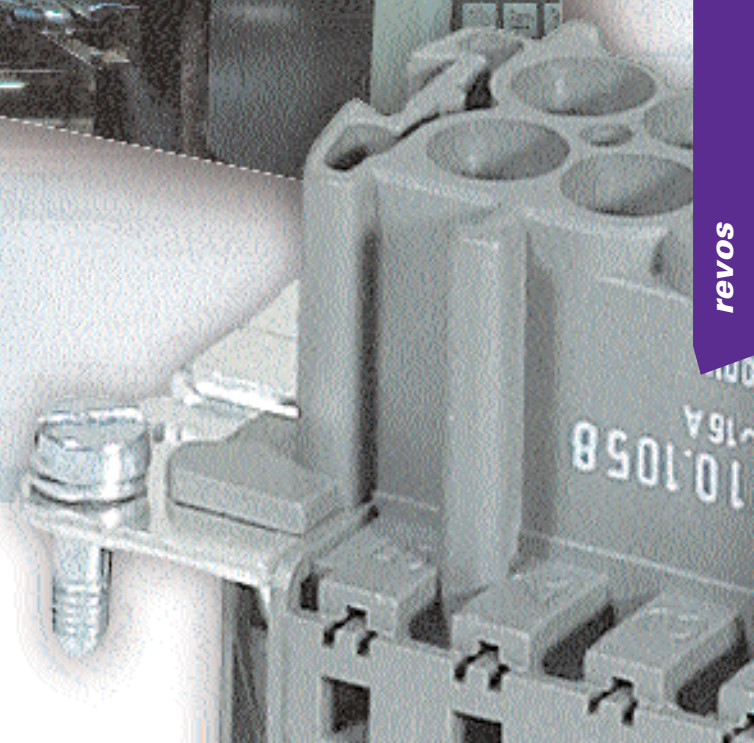

revos

# Industrial Multipole Connectors

# Industrial Multipole Connectors
## Female/male inserts and multipole adapter

# revos BASIC

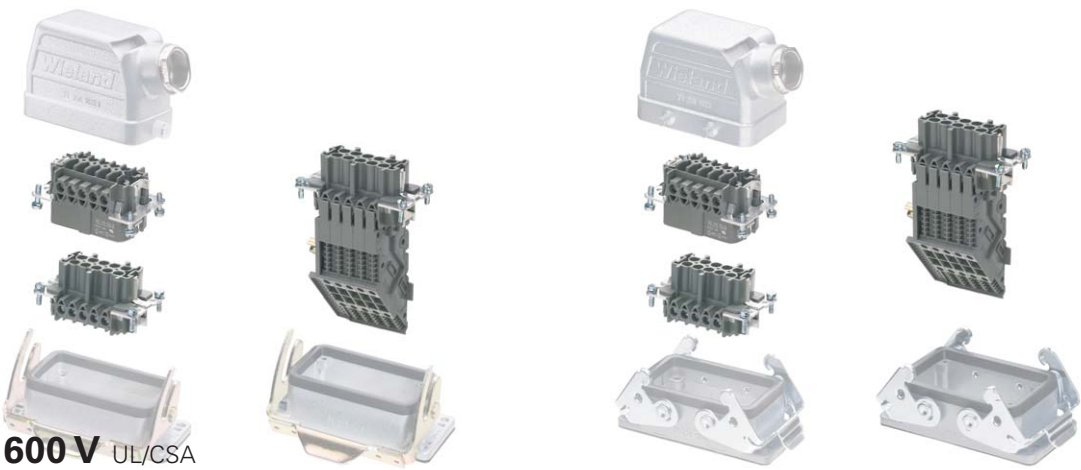

**600 V** UL/CSA

**690 V, 16 A** IEC 61 984

| | | Rated current | Cross section | Approvals | Wire strip length | Contacts | Std. pack |
|---|---|---|---|---|---|---|---|
| 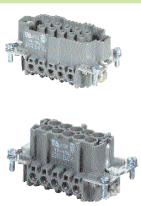 **Screw connection** | Female insert | 16 A | 0.5 – 2.5 mm² 20 – 12 AWG | | 7 mm | tin-plated | 10 |
| | Male insert | 16 A | 0.5 – 2.5 mm² 20 – 12 AWG | | 7 mm | tin-plated | 10 |
| 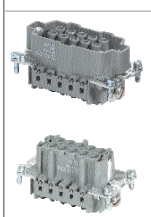 **Crimp connection** | Female insert without crimp contacts | 16 A | 0.5 – 4 mm² 20 – 12 AWG | | 7 mm | tin-plated | 10 |
| | Male insert without crimp contacts | 16 A | 0.5 – 4 mm² 20 – 12 AWG | | 7 mm | tin-plated | 10 |
| | | | | | | | |
| 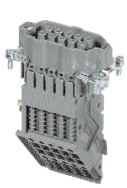 **Screw connection** Multipole adapter long design (6 marking fields) | Female insert, ground right | 16 A/500 V | 0.5 – 4 mm² 20 – 12 AWG | | 12 mm | tin-plated | 10 |
| | Female insert, ground left | 16 A/500 V | 0.5 – 4 mm² 20 – 12 AWG | | 12 mm | tin-plated | 10 |
| | Male insert, ground right | 16 A/500 V | 0.5 – 4 mm² 20 – 12 AWG | | 12 mm | tin-plated | 10 |
| | Male insert, ground left | 16 A/500 V | 0.5 – 4 mm² 20 – 12 AWG | | 12 mm | tin-plated | 10 |
| 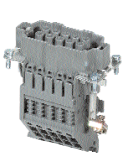 **Screw connection** Multipole adapter short design (4 marking fields) | Female insert, ground right | 16 A/500 V | 0.5 – 4 mm² 20 – 12 AWG | | 12 mm | tin-plated | 10 |
| | Female insert, ground left | 16 A/500 V | 0.5 – 4 mm² 20 – 12 AWG | | 12 mm | tin-plated | 10 |
| | Male insert, ground right | 16 A/500 V | 0.5 – 4 mm² 20 – 12 AWG | | 12 mm | tin-plated | 10 |
| | Male insert, ground left | 16 A/500 V | 0.5 – 4 mm² 20 – 12 AWG | | 12 mm | tin-plated | 10 |
| **Spring connection** Multipole adapter short design (6 marking fields) | Female insert, ground right | 16 A/500 V | 0.5 – 2.5 mm² 20 – 12 AWG | | 9 mm | tin-plated | 10 |
| | Female insert, ground left | 16 A/500 V | 0.5 – 2.5 mm² 20 – 12 AWG | | 9 mm | tin-plated | 10 |
| | Male insert, ground right | 16 A/500 V | 0.5 – 2.5 mm² 20 – 12 AWG | | 9 mm | tin-plated | 10 |
| | Male insert, ground left | 16 A/500 V | 0.5 – 2.5 mm² 20 – 12 AWG | | 9 mm | tin-plated | 10 |

# revos

## Contacts for crimp version

**Female contacts**

**Male contacts**

gold-plated and silver-plated upon request

| Cross section mm² | | Part no. | Std. pack |
|---|---|---|---|
| | | tin-plated | |
| 0.5 | 20 AWG | 02.123.7021.0 | 200 |
| 0.75 – 1 | 18 AWG | 02.123.7121.0 | 200 |
| 1.5 | 16 AWG | 02.123.7221.0 | 200 |
| 2.5 | 14 AWG | 02.123.7321.0 | 200 |
| 4 | 12 AWG | 02.123.7421.0 | 200 |
| 0.5 | 20 AWG | 05.543.7021.0 | 200 |
| 0.75 – 1 | 18 AWG | 05.543.7121.0 | 200 |
| 1.5 | 16 AWG | 05.543.7221.0 | 200 |
| 2.5 | 14 AWG | 05.543.7321.0 | 200 |
| 4 | 12 AWG | 05.543.7421.0 | 200 |
| Crimping tool | | 95.101.0800.0 | 1 |
| Crimping die „B“ | | 05.502.2100.0 | 1 |
| Contact positioner „3“ | | 05.502.3300.0 | 1 |
| Extraction tool | | 05.502.3500.0 | |

**Male switching contact**
(2 pcs. required)

| Cross section mm² | | Part no. | Std. pack |
|---|---|---|---|
| 0.5 | 20 AWG | 05.543.9021.0 | 200 |
| 0.75 – 1 | 18 AWG | 05.543.9121.0 | 200 |
| 1.5 | 16 AWG | 05.543.9221.0 | 200 |
| 2.5 | 14 AWG | 05.543.9321.0 | 200 |
| 4 | 12 AWG | 05.543.9421.0 | 200 |

| 6pole + ground | 10pole + ground | 16pole + ground | 24pole + ground | 32pole + ground<br>2 inserts<br>1 – 16 poles<br>17 – 32 poles | 48pole + ground<br>2 inserts<br>1 – 24 poles<br>25 – 48 poles |
|---|---|---|---|---|---|
| Part no. | Part no. | Part no. | Part no. | Part no. | Part no. |
| 72.300.0653.0 | 72.300.1053.0 | 72.300.1653.0 | 72.300.2453.0 | 72.300.3253.0 | 72.300.4853.0 |
| 72.310.0653.0 | 72.310.1053.0 | 72.310.1653.0 | 72.310.2453.0 | 72.310.3253.0 | 72.310.4853.0 |
| 72.700.0658.0 | 72.700.1058.0 | 72.700.1658.0 | 72.700.2458.0 | 72.700.3258.0 | 72.700.4858.0 |
| 72.710.0658.0 | 72.710.1058.0 | 72.710.1658.0 | 72.710.2458.0 | 72.710.3258.0 | 72.710.4858.0 |

Pole assignment 6pole + ground

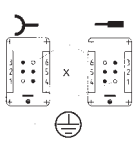

Pole assignment 10pole + ground

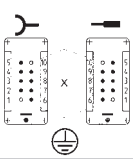

Pole assignment 16pole + ground

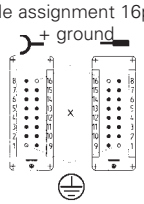

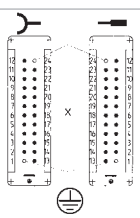

Pole assignment 24pole + ground

X = switching contacts (2 shortened male pins)

32pole: additional switching contacts 17 + 32
48pole: additional switching contacts 25 + 48

| | | | | |
|---|---|---|---|---|
| 72.105.0653.0<br>72.100.0653.0 | 72.105.1053.0<br>72.100.1053.0 | 72.105.1653.0<br>72.100.1653.0 | 72.105.2453.0<br>72.100.2453.0 | 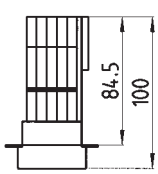 |
| 72.115.0653.0<br>72.110.0653.0 | 72.115.1053.0<br>72.110.1053.0 | 72.115.1653.0<br>72.110.1653.0 | 72.115.2453.0<br>72.110.2453.0 | |
| 72.105.0653.4<br>72.100.0653.4 | 72.105.1053.4<br>72.100.1053.4 | 72.105.1653.4<br>72.100.1653.4 | 72.105.2453.4<br>72.100.2453.4 | 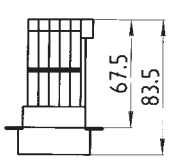 |
| 72.115.0653.4<br>72.110.0653.4 | 72.115.1053.4<br>72.110.1053.4 | 72.115.1653.4<br>72.110.1653.4 | 72.115.2453.4<br>72.110.2453.4 | |
| 72.106.0653.0<br>72.101.0653.0 | 72.106.1053.0<br>72.101.1053.0 | 72.106.1653.0<br>72.101.1653.0 | 72.106.2453.0<br>72.101.2453.0 | 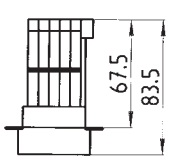 |
| 72.116.0653.0<br>72.111.0653.0 | 72.116.1053.0<br>72.111.1053.0 | 72.116.1653.0<br>72.111.1653.0 | 72.116.2453.0<br>72.111.2453.0 | |

# Industrial Multipole Connectors
# Hoods with a single locking lever

# revos BASIC

**Hood type A**

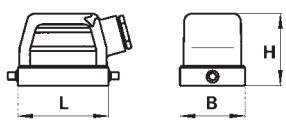


**Hood type B**

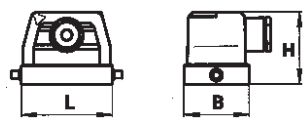


**Hood type C**

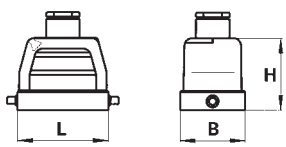


**Degree of protection IP 55**
**Degree of protection IP 65** with matching cable glands (see accessories)

For inserts: **600 V** UL/CSA

For inserts: **690 V** IEC 61 984

| Number of poles | Thread | Gland type | Dimensions in mm | L | W | H | Std. pack |
|---|---|---|---|---|---|---|---|
| Size **6**<br>for connector<br>**6pole + ground** | M 20 | 0 with cable gland<br>1 with threaded collar<br>2 with intermediate support<br>3 with strain relief | | 60 | 43 | 47.5 | 1 |
| | M 25 | 0 with cable gland<br>1 with threaded collar<br>2 with intermediate support<br>3 with strain relief | | 60 | 43 | 47.5 | |
| Size **10**<br>for connector<br>**10pole + ground** | M 20 | 0 with cable gland<br>1 with threaded collar<br>2 with intermediate support<br>3 with strain relief | | 73 | 43 | 53 | 1 |
| | M 25 | 0 with cable gland<br>1 with threaded collar<br>2 with intermediate support<br>3 with strain relief | | 73 | 43 | 53 | |
| Size **16**<br>for connector<br>**16pole + ground** | M 25 | 0 with cable gland<br>1 with threaded collar<br>2 with intermediate support<br>3 with strain relief | | 93,5 | 43 | 60 | 1 |
| | M 32 | 0 with cable gland<br>1 with threaded collar<br>2 with intermediate support<br>3 with strain relief | | 93,5 | 43 | 60 | |
| Size **24**<br>for connector<br>**24pole + ground** | M 25 | 0 with cable gland<br>1 with threaded collar<br>2 with intermediate support<br>3 with strain relief | | 120 | 43 | 70 | 1 |
| | M 32 | 0 with cable gland<br>1 with threaded collar<br>2 with intermediate support<br>3 with strain relief | | 120 | 43 | 70 | |
| Size **48**<br>for connector<br>**48pole + ground** | M32 | 0 with cable gland<br>1 with threaded collar<br>2 with intermediate support<br>3 with strain relief | | 132 | 90 | 107 | 1 |
| | M40 | 1 with threaded collar<br>2 with intermediate support | | 132 | 90 | 107 | 1 |

# revos

| Hood<br><br>Hood type A | Hood<br>for 24pole = 2 x M 25<br><br>Hood type B | Hood<br><br>Hood type C | |
|---|---|---|---|
| 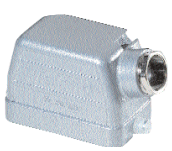 | | | |
| Part no. | Part no. | Part no. | |
| 72.350.0635.0<br>72.350.0635.1<br>72.350.0635.2<br>72.350.0635.3 | 72.351.0635.0<br>72.351.0635.1<br>72.351.0635.2<br>72.351.0635.3 | 72.352.0635.0<br>72.352.0635.1<br>72.352.0635.2<br>72.352.0635.3 | |
| 72.353.0635.0<br>72.353.0635.1<br>72.353.0635.2<br>72.353.0635.3 | | 72.354.0635.0<br>72.354.0635.1<br>72.354.0635.2<br>72.354.0635.3 | |
| 77.350.1035.0<br>77.350.1035.1<br>77.350.1035.2<br>77.350.1035.3 | 77.351.1035.0<br>77.351.1035.1<br>77.351.1035.2<br>77.351.1035.3 | 77.352.1035.0<br>77.352.1035.1<br>77.352.1035.2<br>77.352.1035.3 | |
| 77.353.1035.0<br>77.353.1035.1<br>77.353.1035.2<br>77.353.1035.3 | | 77.354.1035.0<br>77.354.1035.1<br>77.354.1035.2<br>77.354.1035.3 | |
| 77.350.1635.0<br>77.350.1635.1<br>77.350.1635.2<br>77.350.1635.3 | 77.351.1635.0<br>77.351.1635.1<br>77.351.1635.2<br>77.351.1635.3 | 77.352.1635.0<br>77.352.1635.1<br>77.352.1635.2<br>77.352.1635.3 | |
| 77.353.1635.0<br>77.353.1635.1<br>77.353.1635.2<br>77.353.1635.3 | | 77.354.1635.0<br>77.354.1635.1<br>77.354.1635.2<br>77.354.1635.3 | |
| 77.350.2435.0<br>77.350.2435.1<br>77.350.2435.2<br>77.350.2435.3 | 77.351.2435.0<br>77.351.2435.1<br>77.351.2435.2<br>77.351.2435.3 | 77.352.2435.0<br>77.352.2435.1<br>77.352.2435.2<br>77.352.2435.3 | |
| 77.353.2435.0<br>77.353.2435.1<br>77.353.2435.2<br>77.353.2435.3 | | 77.354.2435.0<br>77.354.2435.1<br>77.354.2435.2<br>77.354.2435.3 | |
| 70.350.4835.0<br>70.350.4835.1<br>70.350.4835.2<br>70.350.4835.3 | | 70.352.4835.0<br>70.352.4835.1<br>70.352.4835.2<br>70.352.4835.3 | |
| 70.353.4835.1<br>70.353.4835.2 | | 70.354.4835.1<br>70.354.4835.2 | |

# Industrial Multipole Connectors
## Housings with a single locking lever

# revos BASIC

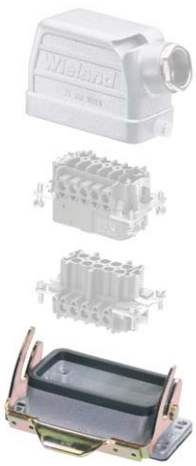

**Housing type a**

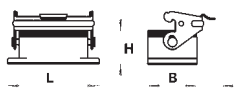


**Housing type b**

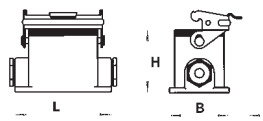


**Housing type c**

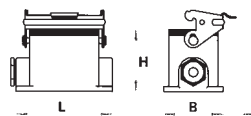


**Housing type d**

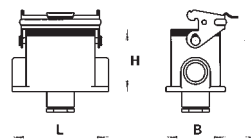


**Housing type i**

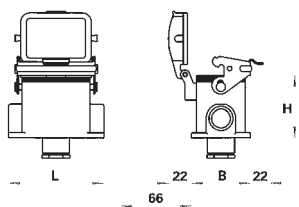


**Degree of protection IP 55**
**Degree of protection IP 65** with matching cable glands

For inserts: **600 V** UL/CSA

For inserts: **690 V** IEC 61 984

| Number of poles | Thread | Gland type | L | W | H | Std. pack | Housing open bottom<br>Housing type a<br> | Housing closed bottom with two cable glands<br>Housing type b<br> | Housing closed bottom with one cable gland on the left<br>Housing type c<br> |
|---|---|---|---|---|---|---|---|---|---|
| Size **6** for connector **6pole + ground** | M 20 | | 80 | 43 | 28 | 1 | 72.320.0628.0 | | |
| | | 0 with cable gland | 84 | 52 | 54.5 | 1 | | 72.330.0635.0 | 72.331.0635.0 |
| | | 1 with threaded collar | 84 | 52 | 54.5 | 1 | | 72.330.0635.1 | 72.331.0635.1 |
| Size **10** for connector **10pole + ground** | M 20 | | 93 | 43 | 28 | 1 | 77.320.1028.0 | | |
| | | 0 with cable gland | 94 | 52 | 54.5 | 1 | | 77.330.1035.0 | 77.331.1035.0 |
| | | 1 with threaded collar | 94 | 52 | 54.5 | 1 | | 77.330.1035.1 | 77.331.1035.1 |
| Size **16** for connector **16pole + ground** | M 25 | | 113 | 43 | 28 | 1 | 77.320.1628.0 | | |
| | | 0 with cable gland | 117 | 52 | 56.5 | 1 | | 77.330.1635.0 | 77.331.1635.0 |
| | | 1 with threaded collar | 117 | 52 | 56.5 | 1 | | 77.330.1635.1 | 77.331.1635.1 |
| Size **24** for connector **24pole + ground** | M25 | | 140 | 43 | 28 | 1 | 77.320.2428.0 | | |
| | | 0 with cable gland | 144 | 52 | 56.5 | 1 | | 77.330.2435.0 | 77.331.2435.0 |
| | | 1 with threaded collar | 144 | 52 | 56.5 | 1 | | 77.330.2435.1 | 77.331.2435.1 |
| Size **48** for connector **48pole + ground** | M32 | | 165 | 90 | 44 | 1 | 70.320.4828.0 | | |
| | | 0 with cable gland | 146 | 120 | 99 | 1 | | | 70.331.4835.0 |
| | | 1 with threaded collar | 146 | 120 | 99 | 1 | | | 70.331.4835.1 |
| | | 3 with strain relief | 146 | 120 | 99 | 1 | | | 70.331.4835.3 |
| | M 40 | 1 with threaded collar | 146 | 120 | 99 | 1 | | | |

Mounting dimensions for open-bottom housings

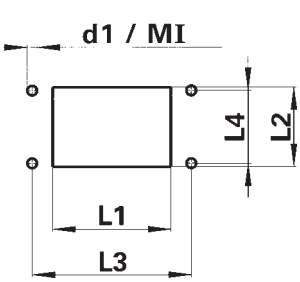


| Housing size | Cut-out (mm) | | Mounting holes (mm) | | | |
|---|---|---|---|---|---|---|
| | L1 | L2 | L3 | L4 | d1 (mm) | MI |
| **6** | 52 | 35 | 70 | 32 | 4.3 | M 4 |
| **10** | 65 | 35 | 83 | 32 | 4.3 | M 4 |
| **16** | 85.5 | 35 | 103 | 32 | 4.3 | M 4 |
| **24** | 112 | 35 | 130 | 32 | 4.3 | M 4 |
| **48** | 117 | 81 | 148 | 70 | 6.4 | M 6 |

# revos

**Housing type e**

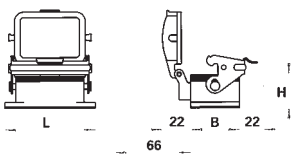


**Housing type f**

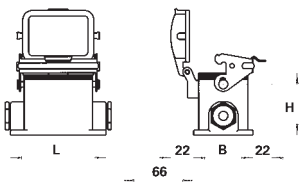


**Housing type g**

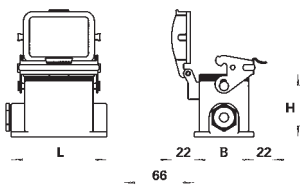


**Housing type h**

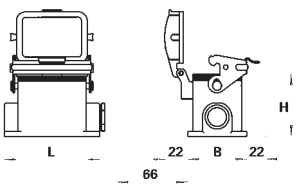


| Housing closed bottom with cable gland at the bottom<br>Housing type d | Housing open bottom with protective cover<br>Housing type e | Housing closed bottom with two glands and protective cover<br>Housing type f | Housing closed bottom with cable gland on the left and protective cover<br>Housing type g | Housing closed bottom with cable gland on the right and protective cover<br>Housing type h | Housing closed bottom with cable gland at the bottom and protective cover<br>Housing type i |
|---|---|---|---|---|---|
| | | | | | |
| Part no. | Part no. | Part no. | Part no. | Part no. | Part no. |
| 72.333.0635.0<br>72.333.0635.1 | 72.325.0628.0 | 72.340.0635.0<br>72.340.0635.1 | 72.341.0635.0<br>72.341.0635.1 | 72.342.0635.0<br>72.342.0635.1 | 72.343.0635.0<br>72.343.0635.1 |
| 77.333.1035.0<br>77.333.1035.1 | 77.325.1028.0 | 77.340.1035.0<br>77.340.1035.1 | 77.341.1035.0<br>77.341.1035.1 | 77.342.1035.0<br>77.342.1035.1 | 77.343.1035.0<br>77.343.1035.1 |
| 77.333.1635.0<br>77.333.1635.1 | 77.325.1628.0 | 77.340.1635.0<br>77.340.1635.1 | 77.341.1635.0<br>77.341.1635.1 | 77.342.1635.0<br>77.342.1635.1 | 77.343.1635.0<br>77.343.1635.1 |
| 77.333.2435.0<br>77.333.2435.1 | 77.325.2428.0 | 77.340.2435.0<br>77.340.2435.1 | 77.341.2435.0<br>77.341.2435.1 | 77.342.2435.0<br>77.342.2435.1 | 77.343.2435.0<br>77.343.2435.1 |
| | 70.325.4828.0 | | 70.341.4835.1<br>70.341.4835.3 | | |
| | | | 70.344.4835.1 | | |

Mounting dimensions for closed-bottom housings

| Mounting size | L5 (mm) | L6 (mm) | d2 (mm) | MII |
|---|---|---|---|---|
| **6** | 70 | 40 | 5.5 | M 5 |
| **10** | 82 | 40 | 5.5 | M 5 |
| **16** | 105 | 45 | 5.5 | M 5 |
| **24** | 132 | 45 | 5.5 | M 5 |
| **48** | 111 | 106 | 6.5 | M 6 |

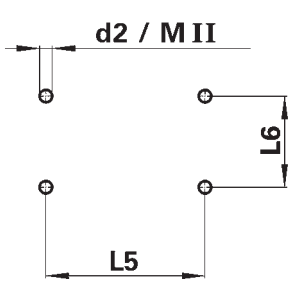

# Industrial Multipole Connectors
# Hoods with double locking levers

## revos BASIC

**Hood type A**

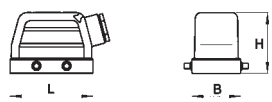


**Hood type B**

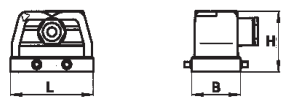


**Hood type C**

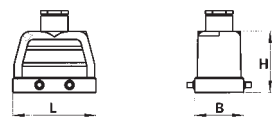


**Degree of protection IP 55**
**Degree of protection IP 65** with matching cable glands (see accessories)

For inserts: **600 V** UL/CSA

For inserts: **690 V** IEC 61 984

| Number of poles | Thread | Gland type | Dimensions in mm | L | W | H | Std. pack |
|---|---|---|---|---|---|---|---|
| Size **10**<br>for connector<br>**10pole + ground** | M 20 | 0 with cable gland<br>1 with threaded collar<br>2 with intermediate support<br>3 with strain relief | | 73 | 43 | 53 | 1 |
| | M 25 | 0 with cable gland<br>1 with threaded collar<br>2 with intermediate support<br>3 with strain relief | | 73 | 43 | 53 | |
| Size **16**<br>for connector<br>**16pole + ground** | M 25 | 0 with cable gland<br>1 with threaded collar<br>2 with intermediate support<br>3 with strain relief | | 93.5 | 43 | 60 | 1 |
| | M 32 | 0 with cable gland<br>1 with threaded collar<br>2 with intermediate support<br>3 with strain relief | | 93.5 | 43 | 60 | |
| Size **24**<br>for connector<br>**24pole + ground** | M 25 | 0 with cable gland<br>1 with threaded collar<br>2 with intermediate support<br>3 with strain relief | | 120 | 43 | 70 | 1 |
| | M 32 | 0 with cable gland<br>1 with threaded collar<br>2 with intermediate support<br>3 with strain relief | | 120 | 43 | 70 | 1 |
| Size **32**<br>for connector<br>**32pole + ground** | M 32 | 0 with cable gland<br>1 with threaded collar<br>2 with intermediate support<br>3 with strain relief | | 93.5 | 82.5 | 94 | 1 |
| | M 40 | 1 with threaded collar<br>2 with intermediate support | | 93.5 | 82.5 | 94 | 1 |

# revos

**Hood type D**

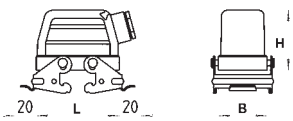


**Hood type E**

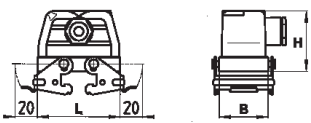


**Hood type F**

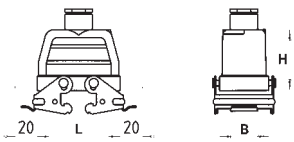


| Hood | Hood<br>for 24pole = 2 x M 25 | Hood | Hood<br>with locking levers | Hood<br>with locking levers<br>for 24pole = 2 x M 25 | Hood<br>with locking levers |
|---|---|---|---|---|---|
| Hood type A | Hood type B | Hood type C | Hood type D | Hood type E | Hood type F |
| | | | | | |
| Part no. | Part no. | Part no. | Part no. | Part no. | Part no. |
| 72.350.1035.0<br>72.350.1035.1<br>72.350.1035.2<br>72.350.1035.3 | 72.351.1035.0<br>72.351.1035.1<br>72.351.1035.2<br>72.351.1035.3 | 72.352.1035.0<br>72.352.1035.1<br>72.352.1035.2<br>72.352.1035.3 | 72.355.1035.0<br>72.355.1035.1<br>72.355.1035.2<br>72.355.1035.3 | 72.356.1035.0<br>72.356.1035.1<br>72.356.1035.2<br>72.356.1035.3 | 72.357.1035.0<br>72.357.1035.1<br>72.357.1035.2<br>72.357.1035.3 |
| 72.353.1035.0<br>72.353.1035.1<br>72.353.1035.2<br>72.353.1035.3 | | 72.354.1035.0<br>72.354.1035.1<br>72.354.1035.2<br>72.354.1035.3 | 72.358.1035.0<br>72.358.1035.1<br>72.358.1035.2<br>72.358.1035.3 | | 72.359.1035.0<br>72.359.1035.1<br>72.359.1035.2<br>72.359.1035.3 |
| 72.350.1635.0<br>72.350.1635.1<br>72.350.1635.2<br>72.350.1635.3 | 72.351.1635.0<br>72.351.1635.1<br>72.351.1635.2<br>72.351.1635.3 | 72.352.1635.0<br>72.352.1635.1<br>72.352.1635.2<br>72.352.1635.3 | 72.355.1635.0<br>72.355.1635.1<br>72.355.1635.2<br>72.355.1635.3 | 72.356.1635.0<br>72.356.1635.1<br>72.356.1635.2<br>72.356.1635.3 | 72.357.1635.0<br>72.357.1635.1<br>72.357.1635.2<br>72.357.1635.3 |
| 72.353.1635.0<br>72.353.1635.1<br>72.353.1635.2<br>72.353.1635.3 | | 72.354.1635.0<br>72.354.1635.1<br>72.354.1635.2<br>72.354.1635.3 | 72.358.1635.0<br>72.358.1635.1<br>72.358.1635.2<br>72.358.1635.3 | | 72.359.1635.0<br>72.359.1635.1<br>72.359.1635.2<br>72.359.1635.3 |
| 72.350.2435.0<br>72.350.2435.1<br>72.350.2435.2<br>72.350.2435.3 | 72.351.2435.0<br>72.351.2435.1<br>72.351.2435.2<br>72.351.2435.3 | 72.352.2435.0<br>72.352.2435.1<br>72.352.2435.2<br>72.352.2435.3 | 72.355.2435.0<br>72.355.2435.1<br>72.355.2435.2<br>72.355.2435.3 | 72.356.2435.0<br>72.356.2435.1<br>72.356.2435.2<br>72.356.2435.3 | 72.357.2435.0<br>72.357.2435.1<br>72.357.2435.2<br>72.357.2435.3 |
| 72.353.2435.0<br>72.353.2435.1<br>72.353.2435.2<br>72.353.2435.3 | | 72.354.2435.0<br>72.354.2435.1<br>72.354.2435.2<br>72.354.2435.3 | 72.358.2435.0<br>72.358.2435.1<br>72.358.2435.2<br>72.358.2435.3 | | 72.359.2435.0<br>72.359.2435.1<br>72.359.2435.2<br>72.359.2435.3 |
| 70.350.3235.0<br>70.350.3235.1<br>70.350.3235.2<br>70.350.3235.3 | | 70.352.3235.0<br>70.352.3235.1<br>70.352.3235.2<br>70.352.3235.3 | | | |
| 70.353.3235.1<br>70.353.3235.2 | | 70.354.3235.1<br>70.354.3235.2 | | | |

# Industrial Multipole Connectors
## Housings with double locking levers

# revos BASIC

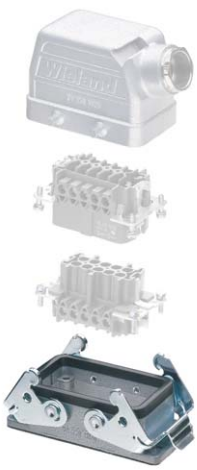

**Hood type a**

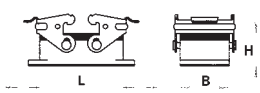


**Hood type b**

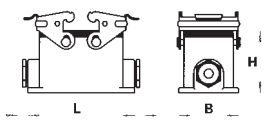


**Hood type c**

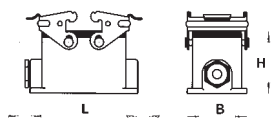


**Hood type d**

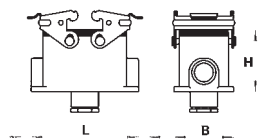


**Housing type i**

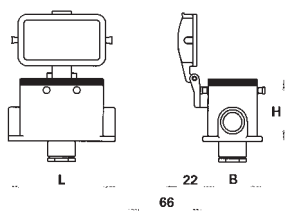


Housing open bottom

Housing type a

Housing closed bottom with two cable glands

Housing type b

Housing closed bottom with one cable gland on the left

Housing type c

**Degree of protection IP 55**
**Degree of protection IP 65** with matching cable glands (see accessories)

For inserts: **600 V** UL/CSA

For inserts: **690 V** IEC 61 984

| Number of poles | Thread | Gland type | L | W | H | Std. pack | Part no. | Part no. | Part no. |
|---|---|---|---|---|---|---|---|---|---|
| Size **10** | | | 93 | 43 | 28 | 1 | 72.320.1028.0 | | |
| for connector | M 20 | 0 with cable gland | 94 | 52 | 54.5 | 1 | | 72.330.1035.0 | 72.331.1035.0 |
| **10pole + ground** | | 1 with threaded collar | 94 | 52 | 54.5 | 1 | | 72.330.1035.1 | 72.331.1035.1 |
| Size **16** | | | 113 | 43 | 28 | 1 | 72.320.1628.0 | | |
| for connector | M 25 | 0 with cable gland | 117 | 52 | 56.5 | 1 | | 72.330.1635.0 | 72.331.1635.0 |
| **16pole + ground** | | 1 with threaded collar | 117 | 52 | 56.5 | 1 | | 72.330.1635.1 | 72.331.1635.1 |
| Size **24** | | | 140 | 43 | 28 | 1 | 72.320.2428.0 | | |
| for connector | M 25 | 0 with cable gland | 144 | 52 | 56.5 | 1 | | 72.330.2435.0 | 72.331.2435.0 |
| **24pole + ground** | | 1 with threaded collar | 144 | 52 | 56.5 | 1 | | 72.330.2435.1 | 72.331.2435.1 |
| Size **32** for connector **32pole + ground** | | | 124 | 84 | 35 | 1 | 70.320.3228.0 | | |

Mounting dimensions for open-bottom housings

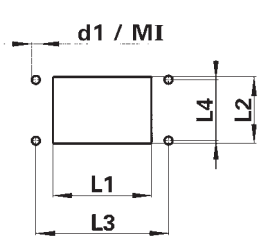


| Housing size | Cut-out (mm) | | Mounting holes (mm) | | | |
|---|---|---|---|---|---|---|
| | L1 | L2 | L3 | L4 | d1 (mm) | MI |
| **10** | 65 | 35 | 83 | 32 | 4.3 | M 4 |
| **16** | 85.5 | 35 | 103 | 32 | 4.3 | M 4 |
| **24** | 112 | 35 | 130 | 32 | 4.3 | M 4 |
| **32** | 117 | 81 | 148 | 70 | 6.4 | M 6 |

# revos

| Hood type e | Housing type f | Housing type g | Housing type h |
|---|---|---|---|

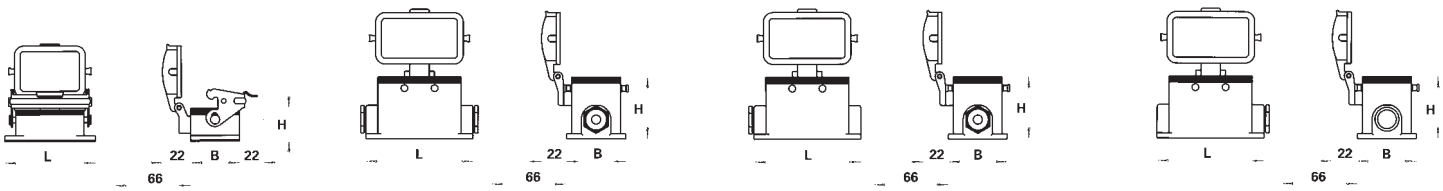


| Housing closed bottom with cable gland at the bottom | Housing open bottom with protective cover | Housing closed bottom with two glands and protective cover | Housing closed bottom with cable gland on the left and protective cover | Housing closed bottom with cable gland on the right and protective cover | Housing closed bottom with cable gland at the bottom and protective cover |
|---|---|---|---|---|---|
| Housing type d | Housing type e | Housing type f | Housing type g | Housing type h | Housing type i |
| | | | | | |
| Part no. | Part no. | Part no. | Part no. | Part no. | Part no. |
| 72.333.1035.0<br>72.333.1035.1 | 70.325.1028.0 | 72.340.1035.0<br>72.340.1035.1 | 72.341.1035.0<br>72.341.1035.1 | 72.342.1035.0<br>72.342.1035.1 | 72.343.1035.0<br>72.343.1035.1 |
| 72.333.1635.0<br>72.333.1635.1 | 70.325.1628.0 | 72.340.1635.0<br>72.340.1635.1 | 72.341.1635.0<br>72.341.1635.1 | 72.342.1635.0<br>72.342.1635.1 | 72.343.1635.0<br>72.343.1635.1 |
| 72.333.2435.0<br>72.333.2435.1 | 70.325.2428.0 | 72.340.2435.0<br>72.340.2435.1 | 72.341.2435.0<br>72.341.2435.1 | 72.342.2435.0<br>72.342.2435.1 | 72.343.2435.0<br>72.343.2435.1 |

Mounting dimensions for closed-bottom housings

| Housing size | L5 (mm) | L6 (mm) |
|---|---|---|
| **10** | 82 | 40 |
| **16** | 105 | 45 |
| **24** | 132 | 45 |

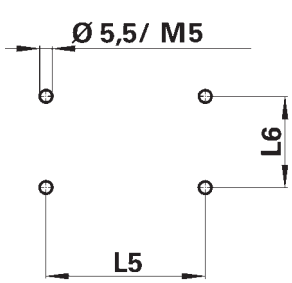

# Industrial multipole connectors
# Multiple multipole connectors

# revos BASIC

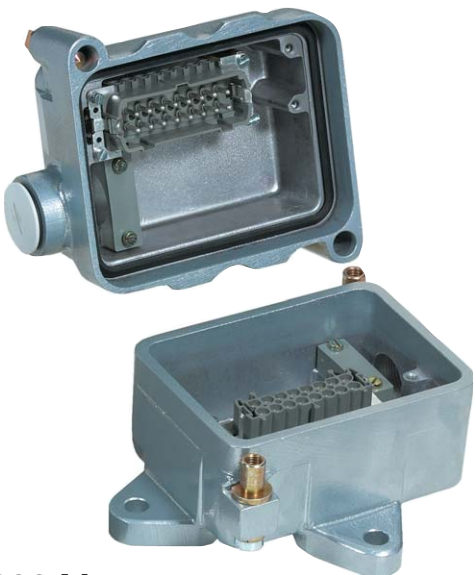

**600 V** UL/CSA

**500 V, 16 A** IEC 61 984

## 16pole and 24pole + ground

**Degree of protection:**
**IP 65** with the appropriate cable glands

| | Number of poles | Cable entry side | Thread | Part no. | Stand. pack |
|---|---|---|---|---|---|
| Housing | | narrow side | M 25 | 75.900.0035.0 | 1 |
| Hood | | narrow side | M 25 | 75.900.0135.0 | 1 |
| Female insert | 16pole + ground | | | 70.300.1640.0 | 10 |
| Male insert | 16pole + ground | | | 70.310.1640.0 | 10 |
| Female insert | 24pole + ground | | | 70.300.2440.0 | 10 |
| Male insert | 24pole + ground | | | 70.310.2440.0 | 10 |
| Housing with female insert | 16pole | narrow side | M 25 | 75.931.1635.0 | 1 |
| Housing with female insert | 16pole | bottom | M 25 | 75.933.1635.0 | 1 |
| Housing with male insert | 16pole | narrow side | M 25 | 75.941.1635.0 | 1 |
| Hood with male insert | 16pole | narrow side | M 25 | 75.950.1635.0 | 1 |
| Hood with female insert | 16pole | narrow side | M 25 | 75.960.1635.0 | 1 |
| Housing with female insert | 24pole | narrow side | M 25 | 75.931.2435.0 | 1 |
| Housing with female insert | 24pole | bottom | M 25 | 75.933.2435.0 | 1 |
| Housing with female insert | 24pole | bottom/narrow side | M 25 | 75.934.2435.0 | |
| Housing with male insert | 24pole | narrow side | M 25 | 75.941.2435.0 | 1 |
| Hood with male insert | 24pole | narrow side | M 25 | 75.950.2435.0 | 1 |
| Hood with female insert | 24pole | narrow side | M 25 | 75.960.2435.0 | 1 |

Housings: are delivered with M 25 threads
With bottom entry threads, the side entry is sealed with a locking piece

Hoods: are delivered with M25 threads and preassembled locking piece

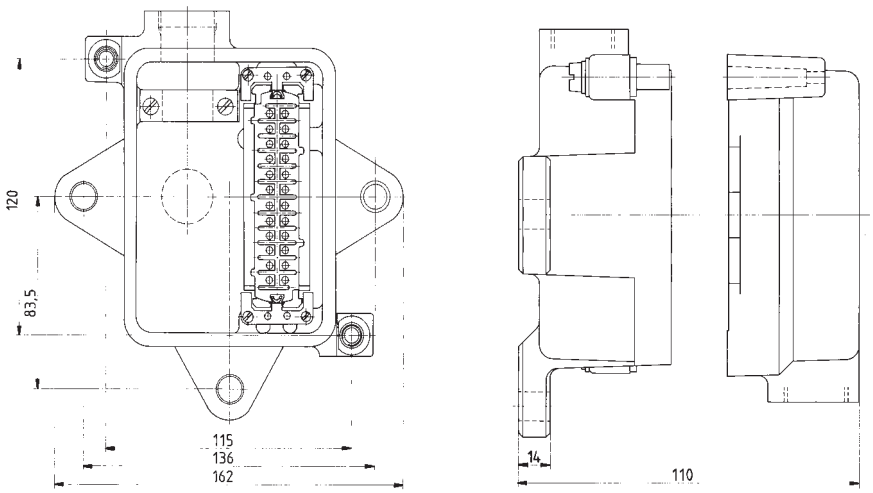
120
83,5
115
136
162
14
110

# Industrial multipole connectors, sets of 2 components
# Housing with multipole adapter with single and double locking levers

## revos BASIC

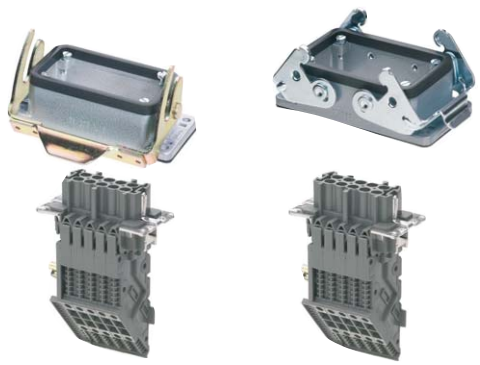

**600 V** UL/CSA

**500 V, 16 A** IEC 61 984

| | | | Cross section | Approvals | Wire strip length | Stand. pack |
|---|---|---|---|---|---|---|
| Single locking lever | **Screw connection**<br>Housing with multipole adapter, long design(6 marking fields), mounting from the rear, Multipole adapter in the housing, unassembled | Multipole adapter in the housing<br>Single locking lever Female adapter insert, ground right<br>Female adapter insert, ground left<br><br>Male adapter insert, ground right<br>Male adapter insert, ground left | 0.5 – 4 mm²<br>20 – 12 AWG | | 12 mm<br>12 mm<br><br>12 mm<br>12 mm | 10<br>10<br><br>10<br>10 |
| Single locking lever | **Screw connection**<br>Housing with multipole adapter, short design (4 markingfields), mounting fromthe rear, Multipole adapterin the housing, unassembled | Multipole adapter in the housing<br>Single locking lever<br>Female adapter insert, ground right<br>Female adapter insert, ground left<br><br>Male adapter insert, ground right<br>Male adapter insert, ground left | 0.5 – 4 mm²<br>20 – 12 AWG | | 12 mm<br>12 mm<br><br>12 mm<br>12 mm | 10<br>10<br><br>10<br>10 |
| Double locking lever | **Screw connection**<br>Housing with multipole adapter, long design (6 marking fields), mounting from the rear, Multipole adapter in the housing, unassembled | Multipole adapter in the housing<br>Double locking lever<br>Female adapter insert, ground right<br>Female adapter insert, ground left<br><br>Male adapter insert, ground right<br>Male adapter insert, ground left | 0.5 – 4 mm²<br>20 – 12 AWG | | 12 mm<br>12 mm<br><br>12 mm<br>12 mm | 10<br>10<br><br>10<br>10 |
| Double locking lever | **Screw connection**<br>Housing with multipole adapter, short design (4 markingfields), mounting fromthe rear, Multipole adapterin the housing, unassembled | Multipole adapter in the housing<br>Double locking lever<br>Female adapter insert, ground right<br>Female adapter insert, ground left<br><br>Male adapter insert, ground right<br>Male adapter insert, ground left | 0.5 – 4 mm²<br>20 – 12 AWG | | 12 mm<br>12 mm<br><br>12 mm<br>12 mm | 10<br>10<br><br>10<br>10 |

# revos

| 6pole + ground | 10pole + ground | 16pole + ground | 24pole + ground | |
|---|---|---|---|---|
| Part no. | Part no. | Part no. | Part no. | |
| 70.945.0653.3<br>70.940.0653.3<br><br>70.955.0653.3<br>70.950.0653.3 | 71.945.1053.3<br>71.940.1053.3<br><br>71.955.1053.3<br>71.950.1053.3 | 71.945.1653.3<br>71.940.1653.3<br><br>71.955.1653.3<br>71.950.1653.3 | 71.945.2453.3<br>71.940.2453.3<br><br>71.955.2453.3<br>71.950.2453.3 | 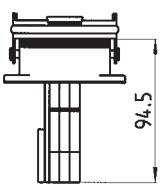  For hoods see page 633 |
| 70.945.0653.4<br>70.940.0653.4<br><br>70.955.0653.4<br>70.950.0653.4 | 71.945.1053.4<br>71.940.1053.4<br><br>71.955.1053.4<br>71.950.1053.4 | 71.945.1653.4<br>71.940.1653.4<br><br>71.955.1653.4<br>71.950.1653.4 | 71.945.2453.4<br>71.940.2453.4<br><br>71.955.2453.4<br>71.950.2453.4 | 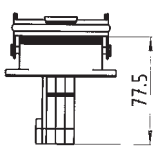  For hoods see page 633 |
| | 70.945.1053.3<br>70.940.1053.3<br><br>70.955.1053.3<br>70.950.1053.3 | 70.945.1653.3<br>70.940.1653.3<br><br>70.955.1653.3<br>70.950.1653.3 | 70.945.2453.3<br>70.940.2453.3<br><br>70.955.2453.3<br>70.950.2453.3 | 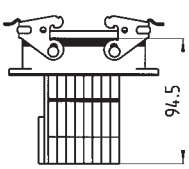  For hoods see page 636 |
| | 70.945.1053.4<br>70.940.1053.4<br><br>70.955.1053.4<br>70.950.1053.4 | 70.945.1653.4<br>70.940.1653.4<br><br>70.955.1653.4<br>70.950.1653.4 | 70.945.2453.4<br>70.940.2453.4<br><br>70.955.2453.4<br>70.950.2453.4 | 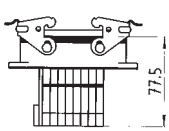  For hoods see page 636 |
| | | | | For inserts and multipole adapters see page 630 |
| | | | | |

# Industrial multipole connectors, sets of 2 components
# Housing with multipole adapter with single and double locking levers

## revos BASIC

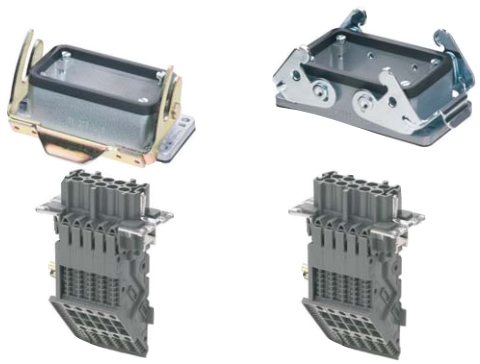

**600 V** UL/CSA

**500 V, 16 A** IEC 61 984

| | | | Cross section | Approvals | Wire strip length | Stand. pack |
|---|---|---|---|---|---|---|
| Single locking lever | **Screw connection**<br>Housing with multipole adapter, long design (6 marking fields), mounting from the rear, Multipole adapter in the housing, unassembled | Multipole adapter in the housing<br>**Single locking lever**<br>Female adapter insert, ground right<br>Female adapter insert, ground left<br><br>Male adapter insert, ground right<br>Male adapter insert, ground left | 0.5 – 4 mm²<br>20 – 12 AWG | | <br><br>12 mm<br>12 mm<br><br>12 mm<br>12 mm | <br><br>10<br>10<br><br>10<br>10 |
| Single locking lever | **Screw connection**<br>Housing with multipole adapter, short design (4 markingfields), mounting fromthe rear, Multipole adapterin the housing, unassembled | Multipole adapter in the housing<br>**Single locking lever**<br>Female adapter insert, ground right<br>Female adapter insert, ground left<br><br>Male adapter insert, ground right<br>Male adapter insert, ground left | 0.5 – 4 mm²<br>20 – 12 AWG | | <br><br>12 mm<br>12 mm<br><br>12 mm<br>12 mm | <br><br>10<br>10<br><br>10<br>10 |
| Double locking lever | **Screw connection**<br>Housing with multipole adapter, long design (6 marking fields), mounting from the rear, Multipole adapter in the housing, unassembled | Multipole adapter in the housing<br>**Double locking lever**<br>Female adapter insert, ground right<br>Female adapter insert, ground left<br><br>Male adapter insert, ground right<br>Male adapter insert, ground left | 0.5 – 4 mm²<br>20 – 12 AWG | | <br><br>12 mm<br>12 mm<br><br>12 mm<br>12 mm | <br><br>10<br>10<br><br>10<br>10 |
| Double locking lever | **Screw connection**<br>Housing with multipole adapter, short design (4 markingfields), mounting fromthe rear, Multipole adapterin the housing, unassembled | Multipole adapter in the housing<br>**Double locking lever**<br>Female adapter insert, ground right<br>Female adapter insert, ground left<br><br>Male adapter insert, ground right<br>Male adapter insert, ground left | 0.5 – 4 mm²<br>20 – 12 AWG | | <br><br>12 mm<br>12 mm<br><br>12 mm<br>12 mm | <br><br>10<br>10<br><br>10<br>10 |

# revos

| 6pole + ground | 10pole + ground | 16pole + ground | 24pole + ground | |
|---|---|---|---|---|
| Part no. | Part no. | Part no. | Part no. | |
| 72.945.0653.0<br>72.940.0653.0<br><br>72.955.0653.0<br>72.950.0653.0 | 77.945.1053.0<br>77.940.1053.0<br><br>77.955.1053.0<br>77.950.1053.0 | 77.945.1653.0<br>77.940.1653.0<br><br>77.955.1653.0<br>77.950.1653.0 | 77.945.2453.0<br>77.940.2453.0<br><br>77.955.2453.0<br>77.950.2453.0 | 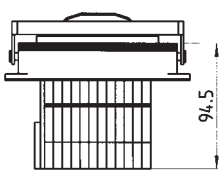  For hoods see page 656 |
| 72.945.0653.4<br>72.940.0653.4<br><br>72.955.0653.4<br>72.950.0653.4 | 77.945.1053.4<br>77.940.1053.4<br><br>77.955.1053.4<br>77.950.1053.4 | 77.945.1653.4<br>77.940.1653.4<br><br>77.955.1653.4<br>77.950.1653.4 | 77.945.2453.4<br>77.940.2453.4<br><br>77.955.2453.4<br>77.950.2453.4 | 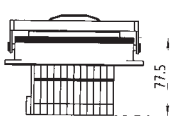  For hoods see page 656 |
| | 72.945.1053.0<br>72.940.1053.0<br><br>72.955.1053.0<br>72.950.1053.0 | 72.945.1653.0<br>72.940.1653.0<br><br>72.955.1653.0<br>72.950.1653.0 | 72.945.2453.0<br>72.940.2453.0<br><br>72.955.2453.0<br>72.950.2453.0 | 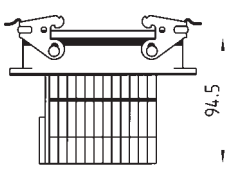  For hoods see page 660 |
| | 72.945.1053.4<br>72.940.1053.4<br><br>72.955.1053.4<br>72.950.1053.4 | 72.945.1653.4<br>72.940.1653.4<br><br>72.955.1653.4<br>72.950.1653.4 | 72.945.2453.4<br>72.940.2453.4<br><br>72.955.2453.4<br>72.950.2453.4 | 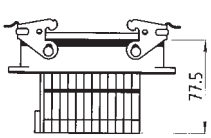  For hoods see page 660 |
| Pole configuration<br>6pole + ground<br> 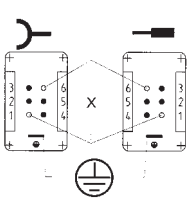 | Pole assignment<br>10pole + ground<br> 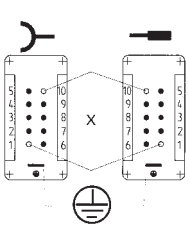 | Pole assignment<br>16pole + ground<br> 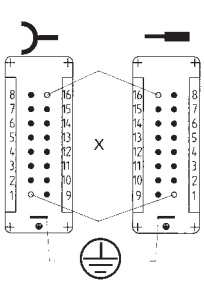 | Pole assignment<br>24pole + ground<br> 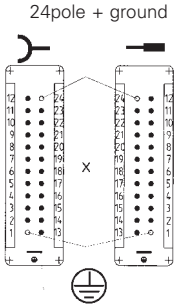 | For inserts and multipole adapters<br>see page 654<br><br>X = switching contacts (2 shortened male pins) |

# Industrial multipole connectors, sets of 2 components
# Housing with multipole adapter with single and double locking levers

## revos BASIC

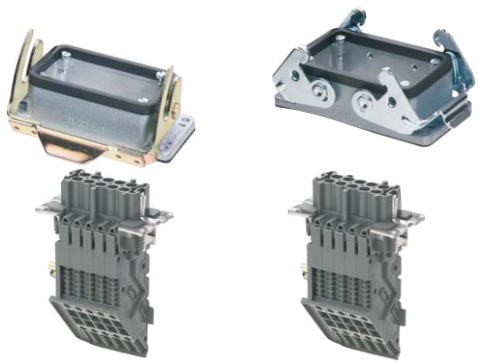

**600 V** UL/CSA

**690 V/400 V, 16 A** IEC 61 984

| | | | Cross section | Approvals | Wire strip length | Stand. pack |
|---|---|---|---|---|---|---|
| Single locking lever | **Screw connection**<br>Housing with multipole adapter, long design (6 marking fields), mounting from the rear, Multipole adapter in the housing, unassembled | Multipole adapter in the housing<br>**Single locking lever**<br>Female adapter insert, ground right<br>Female adapter insert, ground left<br><br>Male adapter insert, ground right<br>Male adapter insert, ground left | 0.5 – 4 mm²<br>20 – 12 AWG | | <br><br>12 mm<br>12 mm<br><br>12 mm<br>12 mm | <br><br>10<br>10<br><br>10<br>10 |
| Single locking lever | **Screw connection**<br>Housing with multipole adapter, short design (4 markingfields), mounting fromthe rear, Multipole adapterin the housing, unassembled | Multipole adapter in the housing<br>**Single locking lever**<br>Female adapter insert, ground right<br>Female adapter insert, ground left<br><br>Male adapter insert, ground right<br>Male adapter insert, ground left | 0.5 – 4 mm²<br>20 – 12 AWG | | <br><br>12 mm<br>12 mm<br><br>12 mm<br>12 mm | <br><br>10<br>10<br><br>10<br>10 |
| Double locking lever | **Screw connection**<br>Housing with multipole adapter, long design (6 marking fields), mounting from the rear, Multipole adapter in the housing, unassembled | Multipole adapter in the housing<br>**Double locking lever**<br>Female adapter insert, ground right<br>Female adapter insert, ground left<br><br>Male adapter insert, ground right<br>Male adapter insert, ground left | 0.5 – 4 mm²<br>20 – 12 AWG | | <br><br>12 mm<br>12 mm<br><br>12 mm<br>12 mm | <br><br>10<br>10<br><br>10<br>10 |
| Double locking lever | **Screw connection**<br>Housing with multipole adapter, short design (4 markingfields), mounting fromthe rear, Multipole adapterin the housing, unassembled | Multipole adapter in the housing<br>**Double locking lever**<br>Female adapter insert, ground right<br>Female adapter insert, ground left<br><br>Male adapter insert, ground right<br>Male adapter insert, ground left | 0.5 – 4 mm²<br>20 – 12 AWG | | <br><br>12 mm<br>12 mm<br><br>12 mm<br>12 mm | <br><br>10<br>10<br><br>10<br>10 |

# revos

| 3pole + ground | 6pole + ground | 10pole + ground | |
|---|---|---|---|
| Part no. | Part no. | Part no. | |
| 71.965.0353.3<br>71.960.0353.3<br><br>71.975.0353.3<br>71.970.0353.3 | 71.965.0653.3<br>71.960.0653.3<br><br>71.975.0653.3<br>71.970.0653.3 | 71.965.1053.3<br>71.960.1053.3<br><br>71.975.1053.3<br>71.970.1053.3 | 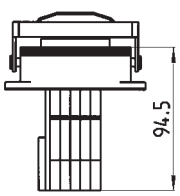  For hoods see page 644 |
| 71.965.0353.4<br>71.960.0353.4<br><br>71.975.0353.4<br>71.970.0353.4 | 71.965.0653.4<br>71.960.0653.4<br><br>71.975.0653.4<br>71.970.0653.4 | 71.965.1053.4<br>71.960.1053.4<br><br>71.975.1053.4<br>71.970.1053.4 | 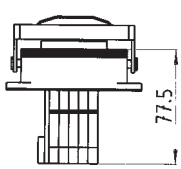  For hoods see page 644 |
| 70.965.0353.3<br>70.960.0353.3<br><br>70.975.0353.3<br>70.970.0353.3 | 70.965.0653.3<br>70.960.0653.3<br><br>70.975.0653.3<br>70.970.0653.3 | 70.965.1053.3<br>70.960.1053.3<br><br>70.975.1053.3<br>70.970.1053.3 | 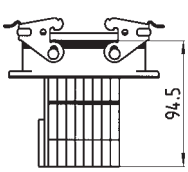  For hoods see page 648 |
| 70.965.0353.4<br>70.960.0353.4<br><br>70.975.0353.4<br>70.970.0353.4 | 70.965.0653.4<br>70.960.0653.4<br><br>70.975.0653.4<br>70.970.0653.4 | 70.965.1053.4<br>70.960.1053.4<br><br>70.975.1053.4<br>70.970.1053.4 | 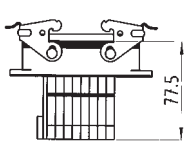  For hoods see page 648 |
| Pole assignment<br>3pole + ground<br> 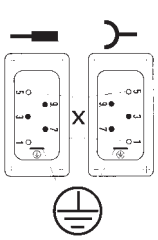 | Pole assignment<br>6pole + ground<br> 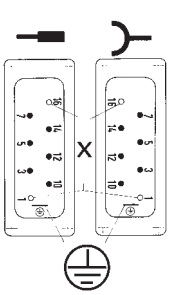 | Pole assignment<br>10pole + ground<br> 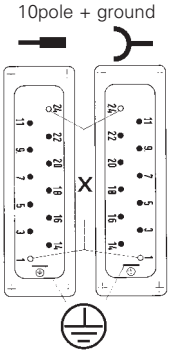 | For inserts and multipole adapters<br>see page 642<br><br>X = switching contacts (2 shortened male pins) |

# Industrial multipole connectors, sets of 4 components with double locking levers

# revos BASIC

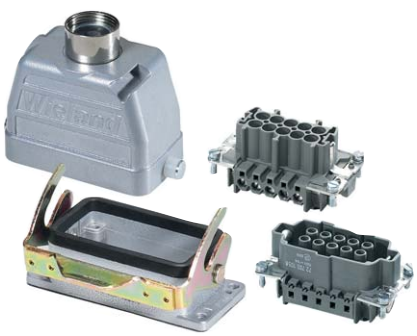

**600 V** UL/CSA

**500 V, 16 A** IEC 61 984

| Hood/housing size | Number of poles | Thread | Stand. pack | Part no. | Female insert<br>**Screw connection**<br> <br>**70.300.xx40.0** | Male insert<br>**Screw connection**<br> <br>**70.310.xx40.0** |
|---|---|---|---|---|---|---|
| For technical information see the individual components | | | | | | |
| **6** | **6pole + ground** | M 20 | 1 | 99.700.0000.6 | ● | ● |
| **10** | **10pole + ground** | M 20 | 1 | 99.701.0000.6 | ● | ● |
| **16** | **16pole + ground** | M 25 | 1 | 99.702.0000.6 | ● | ● |
| **24** | **24pole + ground** | M 25 | 1 | 99.703.0000.6 | ● | ● |
| **6** | **6pole + ground** | M 25 | 1 | 99.706.0000.6 | ● | ● |
| **10** | **10pole + ground** | M 25 | 1 | 99.707.0000.6 | ● | ● |
| **16** | **16pole + ground** | M 32 | 1 | 99.708.0000.6 | ● | ● |
| **24** | **24pole + ground** | M 32 | 1 | 99.709.0000.6 | ● | ● |
| **6** | **6pole + ground** | M 25 | 1 | 99.718.0000.6 | ● | ● |
| **10** | **10pole + ground** | M 25 | 1 | 99.719.0000.6 | ● | ● |
| **16** | **16pole + ground** | M 32 | 1 | 99.720.0000.6 | ● | ● |
| **24** | **24pole + ground** | M 32 | 1 | 99.721.0000.6 | ● | ● |
| **6** | **6pole + ground** | M 20 | 1 | 99.724.0000.6 | ● | ● |
| **10** | **10pole + ground** | M 20 | 1 | 99.725.0000.6 | ● | ● |
| **16** | **16pole + ground** | M 25 | 1 | 99.726.0000.6 | ● | ● |
| **24** | **24pole + ground** | M 25 | 1 | 99.727.0000.6 | ● | ● |

# revos

● **parts belonging to the set of 4 components**

**Connector set complete with:**
Female and male inserts plugged together,
inserted in the mated hood and housing (unassembled), locked

| Hood with narrow-side entry metric cable gland<br> <br>**70.35x.xx35.0** | Hood with top entry metric cable gland<br> <br>**70.352.xx35.0** | Open-bottom housing<br> <br>**70.320.xx28.0** | Closed-bottom housing with one metric cable gland<br> <br>**70.331.xx35.0** |
|---|---|---|---|
| ● | | ● | |
| ● | | ● | |
| ● | | ● | |
| ● | | ● | |
| ● | | ● | |
| ● | | ● | |
| ● | | ● | |
| ● | | ● | |
| | ● | ● | |
| | ● | ● | |
| | ● | ● | |
| | ● | ● | |
| ● | | | ● |
| ● | | | ● |
| ● | | | ● |
| ● | | | ● |
| | | | |

# Industrial multipole connectors
# Multipole connector with latching frame

## revos BASIC

Latching frame to be inserted in sheet metal cut-out, and for use in cable to cable couplings.

| | |
|---|---|
| Screw connection | 0.5 – 2.5 mm² solid/fine stranded<br>20 – 12 AWG |
| Rated current | 16 A |
| Rated voltage VDE | 500 V* |
| Rated voltage CSA | 600 V |

* The mounting style might change the air and creepage distances and influence the rated voltage.

**600 V** CSA

**500 V, 16 A** IEC 61 984

For accessories and marking facilities see page 788

| | | Approvals | Wire strip length | Stand. pack |
|---|---|---|---|---|
| **Latching frame** with strain relief 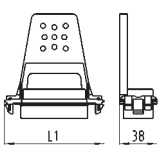  | Female insert | | 7 mm | 10 |
| | Male insert | | 7 mm | 10 |
| **Latching frame** 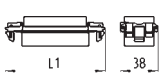  | Female insert | | 7 mm | 10 |
| | Male insert | | 7 mm | 10 |
| **Latching frame** with strain relief and locking levers 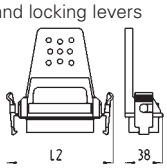  | Female insert | | 7 mm | 10 |
| | Male insert | | 7 mm | 10 |
| **Latching frame** with locking levers 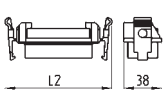  | Female insert | | 7 mm | 10 |
| | Male insert | | 7 mm | 10 |
| **Multipole adapter** with latching frame 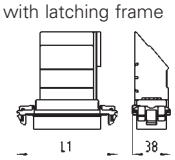  | Female insert, ground right<br>Female insert, ground right with U-foot<br>Female insert, ground left<br>Female insert, ground left with U-foot | | 12 mm | 10 |
| | Male insert, ground right<br>Male insert, ground right with U-foot<br>Male insert, ground left<br>Male insert, ground left with U-foot | | 12 mm | 10 |
| **Multipole adapter** with latching frame and locking levers 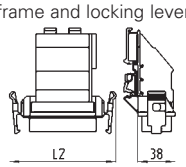  | Female insert, ground right<br>Female insert, ground right with U-foot<br>Female insert, ground left<br>Female insert, ground left with U-foot | | 12 mm | 10 |
| | Male insert, ground right<br>Male insert, ground right with U-foot<br>Male insert, ground left<br>Male insert, ground left with U-foot | | 12 mm | 10 |

# revos

| 6pole + ground | 10pole + ground | 16pole + ground | 24pole + ground |
|---|---|---|---|
| Part no. | Part no. | Part no. | Part no. |
| Z5.570.0156.0 | Z5.570.0256.0 | Z5.570.0056.0 | Z5.570.0356.0 |
| Z5.571.0156.0 | Z5.571.0256.0 | Z5.571.0056.0 | Z5.571.0356.0 |
| Z5.570.1156.0 | Z5.570.1256.0 | Z5.570.1056.0 | Z5.570.1356.0 |
| Z5.571.1156.0 | Z5.571.1256.0 | Z5.571.1056.0 | Z5.571.1356.0 |
| Z5.570.2156.0 | Z5.570.2256.0 | Z5.570.2056.0 | Z5.570.2356.0 |
| Z5.571.2156.0 | Z5.571.2256.0 | Z5.571.2056.0 | Z5.571.2356.0 |
| Z5.570.3156.0 | Z5.570.3256.0 | Z5.570.3056.0 | Z5.570.3356.0 |
| Z5.571.3156.0 | Z5.571.3256.0 | Z5.571.3056.0 | Z5.571.3356.0 |
| Z5.572.1156.0<br>Z5.572.5156.0<br>Z5.572.0156.0<br>Z5.572.4156.0 | Z5.572.1256.0<br>Z5.572.5256.0<br>Z5.572.0256.0<br>Z5.572.4256.0 | Z5.572.1056.0<br>Z5.572.5056.0<br>Z5.572.0056.0<br>Z5.572.4056.0 | Z5.572.1356.0<br>Z5.572.5356.0<br>Z5.572.0356.0<br>Z5.572.4356.0 |
| Z5.573.1156.0<br>Z5.573.5156.0<br>Z5.573.0156.0<br>Z5.573.4156.0 | Z5.573.1256.0<br>Z5.573.5256.0<br>Z5.573.0256.0<br>Z5.573.4256.0 | Z5.573.1056.0<br>Z5.573.5056.0<br>Z5.573.0056.0<br>Z5.573.4056.0 | Z5.573.1356.0<br>Z5.573.5356.0<br>Z5.573.0356.0<br>Z5.573.4356.0 |
| Z5.572.3156.0<br>Z5.572.7156.0<br>Z5.572.2156.0<br>Z5.572.6156.0 | Z5.572.3256.0<br>Z5.572.7256.0<br>Z5.572.2256.0<br>Z5.572.6256.0 | Z5.572.3056.0<br>Z5.572.7056.0<br>Z5.572.2056.0<br>Z5.572.6056.0 | Z5.572.3356.0<br>Z5.572.7356.0<br>Z5.572.2356.0<br>Z5.572.6356.0 |
| Z5.573.3156.0<br>Z5.573.7156.0<br>Z5.573.2156.0<br>Z5.573.6156.0 | Z5.573.3256.0<br>Z5.573.7256.0<br>Z5.573.2256.0<br>Z5.573.6256.0 | Z5.573.3056.0<br>Z5.573.7056.0<br>Z5.573.2056.0<br>Z5.573.6056.0 | Z5.573.3356.0<br>Z5.573.7356.0<br>Z5.573.2356.0<br>Z5.573.6356.0 |

Universal foot, 23 mm wide

05.583.0053.0

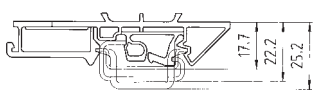


Delivered as standard component where indicated

Cut-out for latching frames

Sheet metal: 2 ± 0.05 mm thick

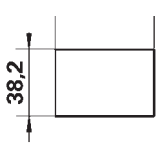


| Housing size | L1 (mm) | L2 (mm) | L3 (mm) |
|---|---|---|---|
| **6** | 67.5 | 74.1 | 62.5 |
| **10** | 80.9 | 87.5 | 75.9 |
| **16** | 101 | 106.5 | 96 |
| **24** | 127.8 | 134.4 | 122.8 |

# Industrial multipole connectors
# Multipole connector with latching frame

## revos BASIC

Latching frame to be inserted in sheet metal cut-out, and for use in cable to cable couplings.

| | |
|---|---|
| Crimp connection | 0,5 – 4 mm² fine stranded<br>20 – 12 AWG |
| Rated current | 16 A |
| Rated voltage VDE | 500 V* |
| Rated voltage CSA | 600 V |

* The mounting style might change the air and creepage distances and influence the rated voltage.

**600 V** CSA

**500 V, 16 A** IEC 61 984

For accessories and marking facilities see page 788

| | | Approvals | Wire strip length | Stand. pack |
|---|---|---|---|---|
| **Latching frame** with strain relief 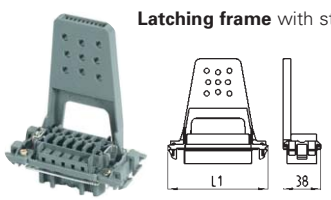  | Female insert | | 7 mm | 10 |
| | Male insert | | 7 mm | 10 |
| **Latching frame** 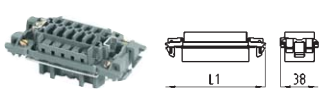  | Female insert | | 7 mm | 10 |
| | Male insert | | 7 mm | 10 |
| **Latching frame** with strain relief and locking levers 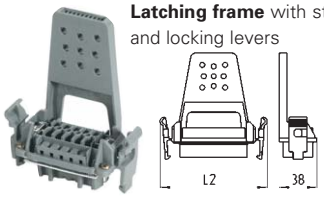  | Female insert | | 7 mm | 10 |
| | Male insert | | 7 mm | 10 |
| **Latching frame** with locking levers 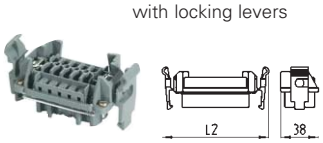  | Female insert | | 7 mm | 10 |
| | Male insert | | 7 mm | 10 |

# revos

## Contacts for crimp version

| | Ø mm² | AWG | Part no. | Stand. pack | Ø mm² | AWG | Part no. | Stand. pack |
|---|---|---|---|---|---|---|---|---|
| | | | tin-plated | | | | gold-plated | |
| **Female contacts** | 0.5 | 20 AWG | 02.123.7021.0 | 200 | 0.5 | 20 AWG | 02.123.7001.0 | |
| | 0.75 – 1 | 18 AWG | 02.123.7121.0 | 200 | 0.75 – 1 | 18 AWG | 02.123.7101.0 | |
| | 1.5 | 16 AWG | 02.123.7221.0 | 200 | 1.5 | 16 AWG | 02.123.7201.0 | 200 |
| | 2.5 | 14 AWG | 02.123.7321.0 | 200 | 2.5 | 14 AWG | 02.123.7301.0 | |
| | 4 | 12 WG | 02.123.7421.0 | 200 | 4 | 12 WG | 02.123.7401.0 | |
| **Male contacts** | 0.5 | 20 AWG | 05.543.7021.0 | 200 | 0.5 | 20 AWG | 05.543.7001.0 | |
| | 0.75 – 1 | 18 AWG | 05.543.7121.0 | 200 | 0.75 – 1 | 18 AWG | 05.543.7101.0 | |
| | 1.5 | 16 AWG | 05.543.7221.0 | 200 | 1.5 | 16 AWG | 05.543.7201.0 | 200 |
| | 2.5 | 14 AWG | 05.543.7321.0 | 200 | 2.5 | 14 AWG | 05.543.7301.0 | |
| | 4 | 12 AWG | 05.543.7421.0 | 200 | 4 | 12 AWG | 05.543.7401.0 | |
| Crimping tool | | | 95.101.0800.0 | 1 | | | | |
| Crimping die "B" | | | 05.502.2100.0 | 1 | | | silver-plated upon request | |
| Contact positioner "3" | | | 05.502.3300.0 | 1 | | | | |
| Extraction tool | | | 05.502.3500.0 | 1 | | | | |

| 6pole + ground | 10pole + ground | 16pole + ground | 24pole + ground |
|---|---|---|---|
| Part no. | Part no. | Part no. | Part no. |
| Z5.570.4156.0 | Z5.570.4256.0 | Z5.570.4056.0 | Z5.570.4356.0 |
| Z5.571.4156.0 | Z5.571.4256.0 | Z5.571.4056.0 | Z5.571.4356.0 |
| Z5.570.5156.0 | Z5.570.5256.0 | Z5.570.5056.0 | Z5.570.5356.0 |
| Z5.571.5156.0 | Z5.571.5256.0 | Z5.571.5056.0 | Z5.571.5356.0 |
| Z5.570.6656.0 | Z5.570.6756.0 | Z5.570.6556.0 | Z5.570.6856.0 |
| Z5.571.6656.0 | Z5.571.6756.0 | Z5.571.6556.0 | Z5.571.6856.0 |
| Z5.570.8656.0 | Z5.570.8756.0 | Z5.570.8556.0 | Z5.570.8856.0 |
| Z5.571.8656.0 | Z5.571.8756.0 | Z5.571.8556.0 | Z5.571.8856.0 |

Universal foot, 23 mm wide

05.583.0053.0

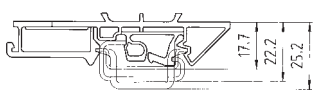


Delivered as standard component where indicated

Cut-out for latching frames

Sheet metal: 2 ± 0.05 mm thick

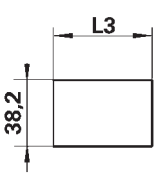


| Housing size | L1 (mm) | L2 (mm) | L3 (mm) |
|---|---|---|---|
| **6** | 67.5 | 74.1 | 62.5 |
| **10** | 80.9 | 87.5 | 75.9 |
| **16** | 101 | 106.5 | 96 |
| **24** | 127.8 | 134.4 | 122.8 |

# Industrial multipole connectors
# Multipole connector with latching frame

# revos BASIC

Latching frame to be inserted in sheet metal cut-out, and for use in cable to cable couplings.

| | |
|---|---|
| Screw connection | 0.5 – 2.5 mm² solid/fine stranded<br>20 – 12 AWG |
| Rated current | 16 A |
| Rated voltage VDE | |
| – multipole connector | 690 V ~* |
| – multipole adapter | 500 V ~* |
| Rated voltage CSA | 600 V |

* The mounting style might change the air and creepage distances and influence the rated voltage.

**600 V** CSA

**690 V, 16 A** IEC 61 984

For accessories and marking facilities see page 788

| | | Approvals | Wire strip length | Stand. pack |
|---|---|---|---|---|
| **Latching frame** with strain relief 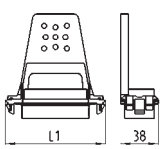 | Female insert | | 7 mm | 10 |
| | Male insert | | 7 mm | 10 |
| **Latching frame** 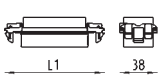 | Female insert | | 7 mm | 10 |
| | Male insert | | 7 mm | 10 |
| **Latching frame** with strain relief and locking levers 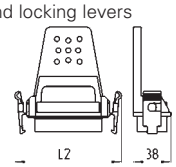 | Female insert | | 7 mm | 10 |
| | Male insert | | 7 mm | 10 |
| **Latching frame** with locking levers 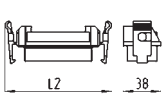 | Female insert | | 7 mm | 10 |
| | Male insert | | 7 mm | 10 |
| **Multipole adapter** with latching frame 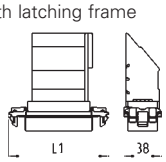 | Female insert, ground right<br>Female insert, ground right with U-foot<br>Female insert, ground left<br>Female insert, ground left with U-foot | | 12 mm | 10 |
| | Male insert, ground right<br>Male insert, ground right with U-foot<br>Male insert, ground left<br>Male insert, ground left with U-foot | | 12 mm | 10 |
| **Multipole adapter** with latching frame and locking levers 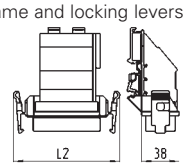 | Female insert, ground right<br>Female insert, ground right with U-foot<br>Female insert, ground left<br>Female insert, ground left with U-foot | | 12 mm | 10 |
| | Male insert, ground right<br>Male insert, ground right with U-foot<br>Male insert, ground left<br>Male insert, ground left with U-foot | | 12 mm | 10 |

# revos

| 6pole + ground | 10pole + ground | 16pole + ground | 24pole + ground |
|---|---|---|---|
| Part no. | Part no. | Part no. | Part no. |
| Z5.570.0656.0 | Z5.570.0756.0 | Z5.570.0556.0 | Z5.570.0856.0 |
| Z5.571.0656.0 | Z5.571.0756.0 | Z5.571.0556.0 | Z5.571.0856.0 |
| Z5.570.1656.0 | Z5.570.1756.0 | Z5.570.1556.0 | Z5.570.1856.0 |
| Z5.571.1656.0 | Z5.571.1756.0 | Z5.571.1556.0 | Z5.571.1856.0 |
| Z5.570.2656.0 | Z5.570.2756.0 | Z5.570.2556.0 | Z5.570.2856.0 |
| Z5.571.2656.0 | Z5.571.2756.0 | Z5.571.2556.0 | Z5.571.2856.0 |
| Z5.570.3656.0 | Z5.570.3756.0 | Z5.570.3556.0 | Z5.570.3856.0 |
| Z5.571.3656.0 | Z5.571.3756.0 | Z5.571.3556.0 | Z5.571.3856.0 |
| Z5.572.1656.0<br>Z5.572.5656.0<br>Z5.572.0656.0<br>Z5.572.4656.0 | Z5.572.1756.0<br>Z5.572.5756.0<br>Z5.572.0756.0<br>Z5.572.4756.0 | Z5.572.1556.0<br>Z5.572.5556.0<br>Z5.572.0556.0<br>Z5.572.4556.0 | Z5.572.1856.0<br>Z5.572.5856.0<br>Z5.572.0856.0<br>Z5.572.4856.0 |
| Z5.573.1656.0<br>Z5.573.5656.0<br>Z5.573.0656.0<br>Z5.573.4656.0 | Z5.573.1756.0<br>Z5.573.5756.0<br>Z5.573.0756.0<br>Z5.573.4756.0 | Z5.573.1556.0<br>Z5.573.5556.0<br>Z5.573.0556.0<br>Z5.573.4556.0 | Z5.573.1856.0<br>Z5.573.5856.0<br>Z5.573.0856.0<br>Z5.573.4856.0 |
| Z5.572.3656.0<br>Z5.572.7656.0<br>Z5.572.2656.0<br>Z5.572.6656.0 | Z5.572.3756.0<br>Z5.572.7756.0<br>Z5.572.2756.0<br>Z5.572.6756.0 | Z5.572.3556.0<br>Z5.572.7556.0<br>Z5.572.2556.0<br>Z5.572.6556.0 | Z5.572.3856.0<br>Z5.572.7856.0<br>Z5.572.2856.0<br>Z5.572.6856.0 |
| Z5.573.3656.0<br>Z5.573.7656.0<br>Z5.573.2656.0<br>Z5.573.6656.0 | Z5.573.3756.0<br>Z5.573.7756.0<br>Z5.573.2756.0<br>Z5.573.6756.0 | Z5.573.3556.0<br>Z5.573.7556.0<br>Z5.573.2556.0<br>Z5.573.6556.0 | Z5.573.3856.0<br>Z5.573.7856.0<br>Z5.573.2856.0<br>Z5.573.6856.0 |

Universal foot, 23 mm wide

05.583.0053.0

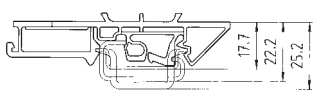


Delivered as standard component where indicated

Cut-out for latching frames

Sheet metal: 2 ± 0.05 mm thick

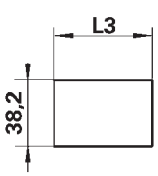


| Housing size | L1 (mm) | L2 (mm) | L3 (mm) |
|---|---|---|---|
| **6** | 67.5 | 74.1 | 62.5 |
| **10** | 80.9 | 87.5 | 75.9 |
| **16** | 101 | 106.5 | 96 |
| **24** | 127.8 | 134.4 | 122.8 |

# Industrial multipole connectors
# Multipole connector with latching frame

## revos BASIC

**600 V** CSA

**690 V, 16 A** IEC 61 984

Latching frame to be inserted in sheet metal cut-out, and for use in cable to cable couplings.

| | |
|---|---|
| Crimp connection | 0,5 – 4 mm² fine stranded<br>20 – 12 AWG |
| Rated current | 16 A |
| Rated voltage VDE | 690 V ~* |
| Rated voltage CSA | 600 V |

* The mounting style might change the air and creepage distances and influence the rated voltage.

For accessories and marking facilities see page 788

| | | Dimensions in mm L W H | Approvals | Wire strip length | Stand. pack |
|---|---|---|---|---|---|
| | **Latching frame** with strain relief 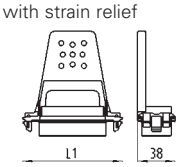 | Female insert | | 7 mm | 10 |
| | | Male insert | | 7 mm | 10 |
| | **Latching frame** 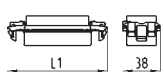 | Female insert | | 7 mm | 10 |
| | | Male insert | | 7 mm | 10 |
| | **Latching frame** with strain relief and locking levers 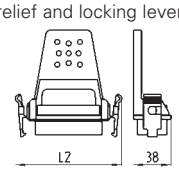 | Female insert | | 7 mm | 10 |
| | | Male insert | | 7 mm | 10 |
| | **Latching frame** with locking levers 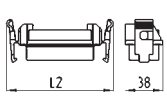 | Female insert | | 7 mm | 10 |
| | | Male insert | | 7 mm | 10 |

# revos

## Contacts for crimp version

| | Ø mm² | AWG | Part no. | Stand. pack | Ø mm² | AWG | Part no. | Stand. pack |
|---|---|---|---|---|---|---|---|---|
| | | | tin-plated | | | | gold-plated | |
| **Female contacts** | 0.5 | 20 AWG | 02.123.7021.0 | 200 | 0.5 | 20 AWG | 02.123.7001.0 | |
| | 0.75 – 1 | 18 AWG | 02.123.7121.0 | 200 | 0.75 – 1 | 18 AWG | 02.123.7101.0 | |
| | 1.5 | 16 AWG | 02.123.7221.0 | 200 | 1.5 | 16 AWG | 02.123.7201.0 | 200 |
| | 2.5 | 14 AWG | 02.123.7321.0 | 200 | 2.5 | 14 AWG | 02.123.7301.0 | |
| | 4 | 12 WG | 02.123.7421.0 | 200 | 4 | 12 WG | 02.123.7401.0 | |
| **Male contacts** | 0.5 | 20 AWG | 05.543.7021.0 | 200 | 0.5 | 20 AWG | 05.543.7001.0 | |
| | 0.75 – 1 | 18 AWG | 05.543.7121.0 | 200 | 0.75 – 1 | 18 AWG | 05.543.7101.0 | |
| | 1.5 | 16 AWG | 05.543.7221.0 | 200 | 1.5 | 16 AWG | 05.543.7201.0 | 200 |
| | 2.5 | 14 AWG | 05.543.7321.0 | 200 | 2.5 | 14 AWG | 05.543.7301.0 | |
| | 4 | 12 AWG | 05.543.7421.0 | 200 | 4 | 12 AWG | 05.543.7401.0 | |
| Crimping tool | | | 95.101.0800.0 | 1 | | | | |
| Crimping die "B" | | | 05.502.2100.0 | 1 | | | silver-plated upon request | |
| Contact positioner "3" | | | 05.502.3300.0 | 1 | | | | |
| Extraction tool | | | 05.502.3500.0 | 1 | | | | |

| 6pole + ground | 10pole + ground | 16pole + ground | 24pole + ground |
|---|---|---|---|
| Part no. | Part no. | Part no. | Part no. |
| Z5.570.4656.0 | Z5.570.4756.0 | Z5.570.4556.0 | Z5.570.4856.0 |
| Z5.571.4656.0 | Z5.571.4756.0 | Z5.571.4556.0 | Z5.571.4856.0 |
| Z5.570.5656.0 | Z5.570.5756.0 | Z5.570.5556.0 | Z5.570.5856.0 |
| Z5.571.5656.0 | Z5.571.5756.0 | Z5.571.5556.0 | Z5.571.5856.0 |
| Z5.570.7656.0 | Z5.570.7756.0 | Z5.570.7556.0 | Z5.570.7856.0 |
| Z5.571.7656.0 | Z5.571.7756.0 | Z5.571.7556.0 | Z5.571.7856.0 |
| Z5.570.9656.0 | Z5.570.9756.0 | Z5.570.9556.0 | Z5.570.9856.0 |
| Z5.571.9656.0 | Z5.571.9756.0 | Z5.571.9556.0 | Z5.571.9856.0 |

Universal foot, 23 mm wide

05.583.0053.0

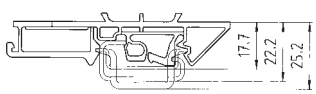


Delivered as standard component where indicated

Cut-out for latching frames

Sheet metal: 2 ± 0.05 mm thick

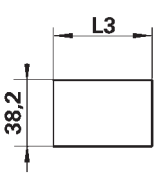


| Housing size | L1 (mm) | L2 (mm) | L3 (mm) |
|---|---|---|---|
| **6** | 67.5 | 74.1 | 62.5 |
| **10** | 80.9 | 87.5 | 75.9 |
| **16** | 101 | 106.5 | 96 |
| **24** | 127.8 | 134.4 | 122.8 |

# Industrial multipole connectors
# Multipole connector with latching frame

## revos BASIC

**600 V** CSA
**250 V, 10 A** IEC 61 984

Latching frame to be inserted in sheet metal cut-out, and for use in cable to cable couplings.

| | |
|---|---|
| Screw connection | 0,5 – 2.5 mm² solid/fine stranded<br>20 – 12 AWG |
| Crimp connection | 0,2 – 1.5 mm² fine stranded<br>24 – 16 AWG |
| Rated current | 10 A |
| Rated voltage VDE | 250 V* |
| Rated voltage CSA | 600 V |

* The mounting style might change the air and creepage distances and influence the rated voltage.

For accessories and marking facilities see page 788

| | | Approvals | Wire strip length | Stand. pack |
|---|---|---|---|---|
| 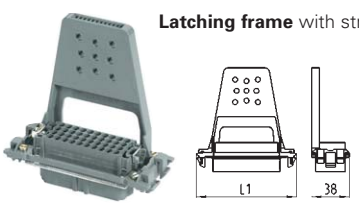 **Latching frame** with strain relief | Female insert in crimp version | | 4 mm | 10 |
| | Male insert in crimp version | | 4 mm | 10 |
| 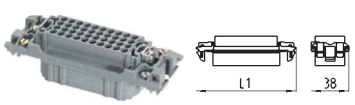 **Latching frame** | Female insert in crimp version | | 4 mm | 10 |
| | Male insert in crimp version | | 4 mm | 10 |
| **Latching frame** with strain relief and locking levers | Female insert in crimp version | | 4 mm | 10 |
| | Male insert in crimp version | | 4 mm | 10 |
| 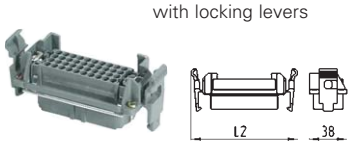 **Latching frame** with locking levers | Female insert in crimp version | | 4 mm | 10 |
| | Male insert in crimp version | | 4 mm | 10 |
| 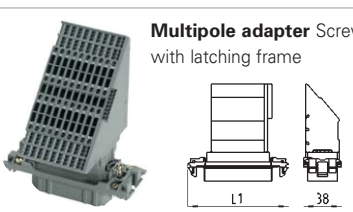 **Multipole adapter** Screw version with latching frame | Female insert, ground right<br>Female insert, ground right with U-foot<br>Female insert, ground left<br>Female insert, ground left with U-foot | | 12 mm | 4 |
| | Male insert, ground right<br>Male insert, ground right with U-foot<br>Male insert, ground left<br>Male insert, ground left with U-foot | | 12 mm | 4 |
| 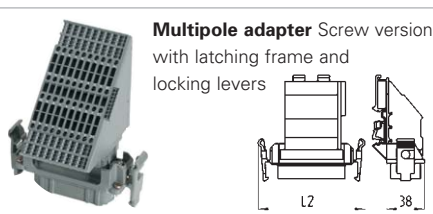 **Multipole adapter** Screw version with latching frame and locking levers | Female insert, ground right<br>Female insert, ground right with U-foot<br>Female insert, ground left<br>Female insert, ground left with U-foot | | 12 mm | 4 |
| | Male insert, ground right<br>Male insert, ground right with U-foot<br>Male insert, ground left<br>Male insert, ground left with U-foot | | 12 mm | 4 |

# revos

## Contacts for crimp version

**Female contacts**

**Male contacts**

| Ø mm² | AWG | Part no. | Stand. pack |
|---|---|---|---|
| 0.2 – 0.56 mm² | 24 – 20 | tin-plated | |
| Reel contacts | | 02.124.0900.0 | 5000 |
| Single contacts | | 02.124.0929.0 | 200 |
| 0.75 – 1.50 mm² | 18 – 16 | | |
| Reel contacts | | 02.124.1000.0 | 5000 |
| Single contacts | | 02.124.1029.0 | 200 |
| 0.2 – 0.56 mm² | 24 – 20 | | |
| Reel contacts | | 05.544.0900.0 | 5000 |
| Single contacts | | 05.544.0929.0 | 200 |
| 0.75 – 1.50 mm² | 18 – 16 | | |
| Reel contacts | | 05.544.1000.0 | 5000 |
| Single contacts | | 05.544.1029.0 | 200 |

| Ø mm² | AWG | Part no. | Stand. pack |
|---|---|---|---|
| 0.5 – 1.50 mm² | 20 – 16 | gold-plated | |
| Reel contacts | | 02.124.1400.0 | 5000 |
| Single contacts | | 02.124.1429.0 | 200 |
| 0.5 – 1.50 mm² | 20 – 16 | | |
| Reel contacts | | 05.544.1400.0 | 5000 |
| Single contacts | | 05.544.1429.0 | 200 |
| Crimping tool | | 95.101.0800.0 | 1 |
| Crimping die "E" | | 05.502.2400.0 | 1 |
| Contact positioner "2" | | 05.502.3200.0 | 1 |
| Extraction tool | | 05.502.0000.0 | 1 |

| 40pole + ground | 64pole + ground |
|---|---|
| Part no. | Part no. |
| Z5.570.6056.0 | Z5.570.6156.0 |
| Z5.571.6056.0 | Z5.571.6156.0 |
| Z5.570.7056.0 | Z5.570.7156.0 |
| Z5.571.7056.0 | Z5.571.7156.0 |
| Z5.570.8056.0 | Z5.570.8156.0 |
| Z5.571.8056.0 | Z5.571.8156.0 |
| Z5.570.9056.0 | Z5.570.9156.0 |
| Z5.571.9056.0 | Z5.571.9156.0 |
| Z5.572.8356.0<br>Z5.572.9356.0<br>Z5.572.8056.0<br>Z5.572.9156.0 | Z5.572.8456.0<br>Z5.572.9456.0<br>Z5.572.8156.0<br>Z5.572.9256.0 |
| Z5.573.8356.0<br>Z5.573.9356.0<br>Z5.573.8056.0<br>Z5.573.9156.0 | Z5.573.8456.0<br>Z5.573.9456.0<br>Z5.573.8156.0<br>Z5.573.9256.0 |
| Z5.572.8956.0<br>Z5.572.9756.0<br>Z5.572.8656.0<br>Z5.572.9556.0 | Z5.572.9056.0<br>Z5.572.9856.0<br>Z5.572.8756.0<br>Z5.572.9656.0 |
| Z5.573.8956.0<br>Z5.573.9756.0<br>Z5.573.8656.0<br>Z5.573.9556.0 | Z5.573.9056.0<br>Z5.573.9856.0<br>Z5.573.8756.0<br>Z5.573.9656.0 |

Universal foot, 23 mm wide

05.583.0053.0

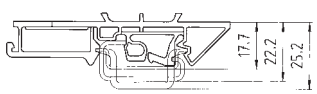


Delivered as standard component where indicated

Cut-out for latching frames

Sheet metal: 2 ± 0.05 mm thick

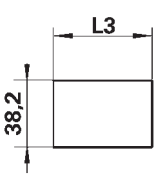


| Housing size | L1 (mm) | L2 (mm) | L3 (mm) |
|---|---|---|---|
| **40** | 101 | 106.5 | 96 |
| **64** | 127.8 | 134.4 | 122.8 |

# Industrial Multipole Connector
## EMC hoods and housings for multipole connectors

**revos** BASIC

**Hood**
**10-/16-/24 pole**

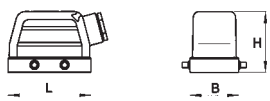


**Open-bottom housing**
**10-/16-/24 pole**

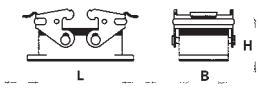


**Hood**
**6 pole**

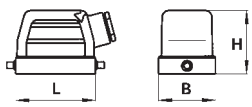


**Open-bottom housing**
**6 pole**

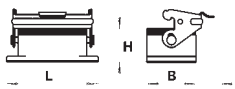


**Suited for:**
Multipole connector inserts
***revos*** BASIC
***revos*** FLEX

Hood

Picture only for
10-/16-/24 pole

Open-bottom housing

Picture only for
10-/16-/24 pole

| Number of poles | Thread | Cable gland type | L | W | H | Stand. pack | Hood Part no. | Open-bottom housing Part no. |
|---|---|---|---|---|---|---|---|---|
| Housing size **6** for multipole connectors **6pole + ground** single locking lever | | | 80 | 48 | 30.3 | 1 | | 70.320.0638.0 |
| | M 20 | 1 with thread | 60 | 43 | 51 | | 70.350.0645.1 | |
| | M 25 | 1 with thread | 60 | 43 | 51 | | 70.353.0645.1 | |
| | M 32 | 1 with thread | 60 | 43 | 70 | | 73.353.0645.1 | |
| Housing size **10** for multipole connectors **10pole + ground** double locking levers | | | 93 | 48 | 30.3 | 1 | | 70.320.1038.0 |
| | M 25 | 1 with thread | 73 | 43 | 51 | | 70.350.1045.1 | |
| | M 32 | 1 with thread | 73 | 43 | 70 | | 73.353.1045.1 | |
| Housing size **16** for multipole connectors **16pole + ground** double locking levers | | | 113 | 48 | 30.3 | 1 | | 70.320.1638.0 |
| | M 32 | 1 with thread | 93.5 | 43 | 62 | | 70.353.1645.1 | |
| | M 32 | 1 with thread | 93.5 | 43 | 76 | | 73.353.4045.1 | |
| Housing size **24** for multipole connectors **24pole + ground** double locking levers | | | 140 | 48 | 30.3 | 1 | | 70.320.2438.0 |
| | M 32 | 1 with thread | 120 | 43 | 62 | | 70.353.2445.1 | |
| | M 32 | 1 with thread | 120 | 43 | 76 | | 73.353.6445.1 | |

Mounting dimensions
and cut-outs for
open-bottom housings

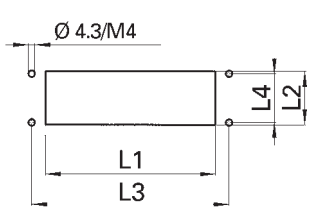


| Housing size | Cut-out (mm) | | Mounting dimensions (mm) | |
|---|---|---|---|---|
| | L1 | L2 | L3 | L4 |
| **6** | 52 | 35 | 70 | 32 |
| **10** | 65 | 35 | 83 | 32 |
| **16** | 85,5 | 35 | 103 | 32 |
| **24** | 112 | 35 | 130 | 32 |

### Cable gland for EMC hoods/housings

| | |
|---|---|
| Z5.507.4821.0 | M 20 |
| Z5.507.5021.0 | M 25 |
| Z5.507.5221.0 | M 32 |

# EMC hoods and housings for multipole connectors

revos

Multipole connectors function as an interface between the individual system components and influence the function of the entire system.

For this reason, Wieland Electric GmbH offers electromagnetic compatible (EMC) hoods and housings which help to maintain the function of the entire system.

In former times we had to cope with the danger of interrupted cable shielding whenever they were connected via multipole connectors. The electrical signals could not suffienctly be shielded against electromagnetic fields.

**The solution:**

- ❑ Contact is made by putting an open shield over a special EMC cable gland for ground connection between the cable and the connector.
- ❑ Contact between the hood and the housing via a HF gasket (silver-plated contact zone). When the hood is plugged together with the housing, the unit forms a maze which guarantees the EMC protection on this interface.
- ❑ By means of screws, the housing is mounted to a metal partition plate for ground connection.
- ❑ Highly conductive surface plating of the EMC hoods and housings for improved contacting on the individual interfaces.

**System advantages:**

- ➠ High screening attenuation
- ➠ 360° HF overall protection
- ➠ Highly conductive surface of the hoods and housings
- ➠ 6/10/16/24pole hood and housing sizes in high and flat design
- ➠ Different hood and housing variants
- ➠ Degree of protection IP 65 with closed locking levers

***1** 16pole EMC multipole connector hoods/housings
***2** 16pole standard multipole connector hoods/housings with EMC cable glands

# revos POWER

**Technical information**

| | | | |
|---|---|---|---|
| ■ **Approvals** | UL, CSA, SEV, MEEI | | |
| ■ **Applicable standards** | IEC 61 984 | | |
| ■ **Contact inserts** | | | |
| Number of poles | 6 + ground | / 6 + ground | / 4 + ground |
| Rated current | 35 A | / 35 A | / 82 A |
| Rated voltage | 400 V | / 690 V | / 690/400 V |
| Screw connection | 2.5 – 6 $mm^2$ | / 2.5 – 6 $mm^2$ | / 6 – 16 $mm^2$ |
| | 14 – 8 AWG | /14 – 8 AWG | /10 – 4 AWG |
| Number of poles | 4/6 + ground | / 6/6 + ground | |
| Rated current | 35/16 A | / 40/16 A | |
| Rated voltage | 690 V | / 690/400 V + 400/230 V | |
| Screw connection | 4 x 2.5 – 6 $mm^2$ | / 6 x 4 – 10 $mm^2$ | |
| | 4 x 14 – 8 AWG | / 6 x 12 – 6 AWG | |
| | 6 x 1 – 2.5 $mm^2$ | / 6 x 1 – 2.5 $mm^2$ | |
| | 6 x 16 – 12 AWG | / 6 x 16 – 12 AWG | |
| Number of poles | 3/3/6 + ground | / 4/2 + ground | |
| Rated current | 100/40/16 A | / 82/16 A (70/16 A CSA) | |
| Rated voltage | 690/400 V | / 690 V | |
| | 690/400 V | / 400 V | |
| | 400/230 V | | |
| Screw connection | 3 x 10 – 25 $mm^2$ | / 4 x 6 — 16 $mm^2$ | |
| | 3 x AWG 8 – 2 | / 4 x AWG 10 – 4 | |
| | 3 x 4 – 10 $mm^2$ | / 2 x 1 – 2.5 $mm^2$ | |
| | 3 x AWG 12 – 6 | / 2 x AWG 16 – 12 | |
| | 6 x 1 – 2.5 $mm^2$ | | |
| | 6 x AWG 16 – 12 | | |
| Nominal voltage accord. to UL | 600 V | | |
| Nominal voltage accord. to CSA | 600 V | | |
| Degree of pollution | 3 | | |
| Temperature range | –40 to +110 °C | | |
| ■ **Multipole adapters** | | | |
| Number of poles | 6 + ground | / 6 + ground | / 4/6 + ground |
| Rated current | 35 A | / 35 A | / 35/16 A |
| Rated voltage | 400 V | / 690 V | / 500 V |
| Screw connection | 2.5 – 6.0 $mm^2$ | / 2.5 – 6.0 $mm^2$ | / 4 x 2.5 – 6.0 $mm^2$ / 6 x 1.5 – 4 $mm^2$ |
| | 14 – 8 AWG | / 14 – 8 AWG | / 4 x 14 – 8 AWG / 6 x 16 – 12 AWG |
| Nominal voltage accord. to UL | 600 V | | |
| Nominal voltage accord. to CSA | 600 V | | |
| Degree of pollution | 3 | | |
| Temperature range | –40 to +110 °C | | |
| ■ **Contacts** | | | |
| Material | copper alloy | | |
| Surface | tin-plated | | |
| Surface | silver-plated | | |
| ■ **Hoods and housings** | | | |
| Material | die cast aluminum alloy | | |
| Surface | silver gray, silicon-free finish | | |
| Locking levers | zinc-plated steel | | |
| Gaskets | NBR | | |
| Temperature range | –40 to +110 °C | | |
| Degree of protection accord. to DIN EN 60 529 | | | |
| with latched locking levers | IP 55 | | |
| with appropriate cable glands | IP 65 | | |

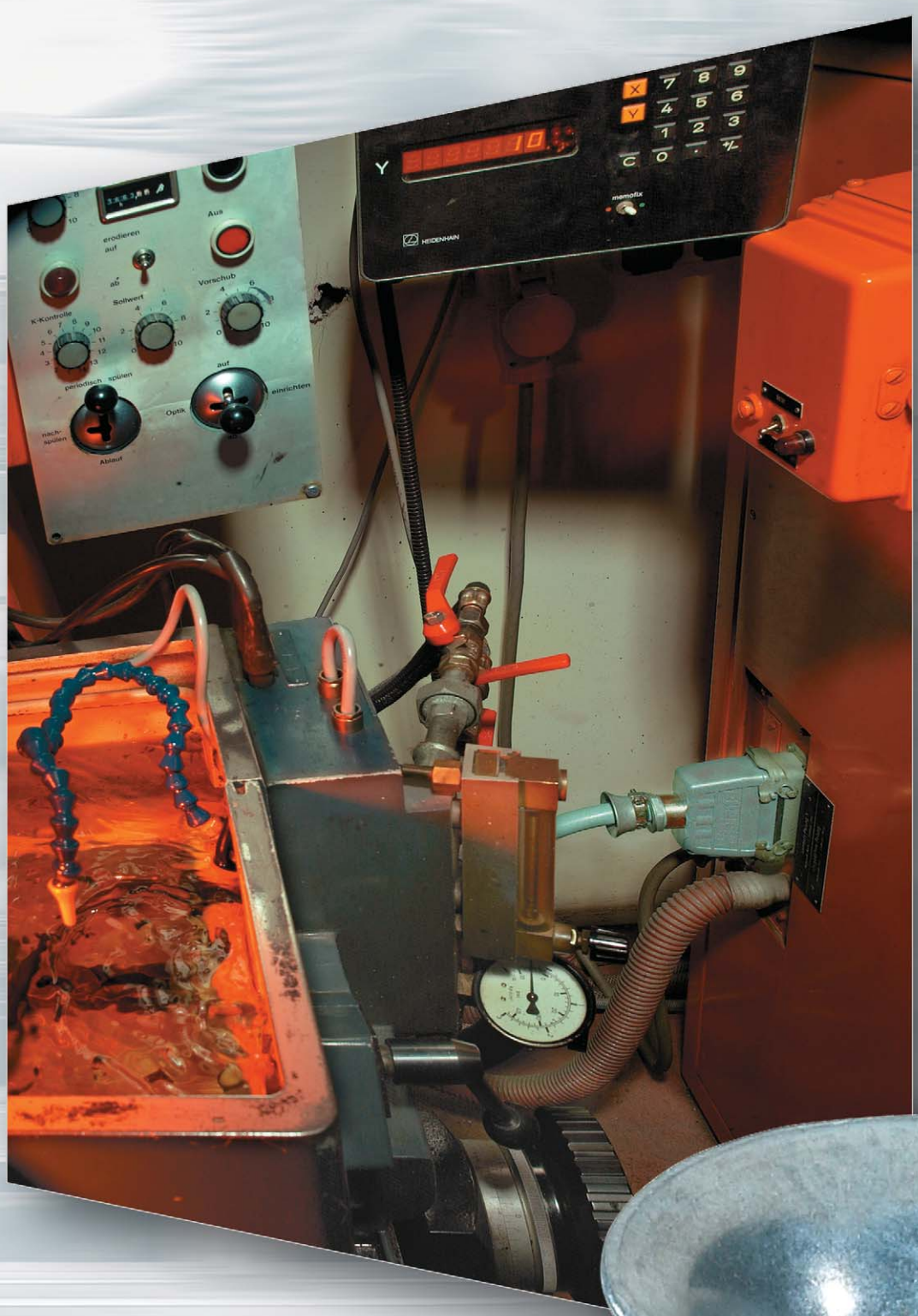

revos

# Industrial Multipole Connectors

# Industrial multipole connectors, female and male inserts, multipole adapters, hoods and housings with single locking levers, 6pole

## revos POWER

**600 V** UL/CSA

**400 V, 35 A** IEC 61 984

**Degrees of protection: IP 55; IP 65** with the appropriate cable glands

| | | Cross section | Approvals | Wire strip length | Material | Stand. pack |
|---|---|---|---|---|---|---|
| **Screw connection** | Female insert | 2.5 – 6 mm²<br>14 – 8 AWG | | 10 mm | silver-plated | 10 |
| | Male insert | 2.5 – 6 mm²<br>14 – 8 AWG | | 10 mm | silver-plated | 10 |
| **Screw connection** Multipole adapters | Female insert, ground right | 2.5 – 6 mm²<br>14 – 8 AWG | | 12 mm | silver-plated | 10 |
| | Female insert, ground left | | | 12 mm | silver-plated | 10 |
| | Male insert, ground right | 2.5 – 6 mm²<br>14 – 8 AWG | | 12 mm | silver-plated | 10 |
| | Male insert, ground left | | | 12 mm | silver-plated | 10 |

| Number of poles | Thread | Cable gland type | Stand. pack |
|---|---|---|---|
| Housing size **16**<br>for multipole connectors<br>**6pole + ground** | M 25 | 0 with cable gland<br>1 with thread<br>2 with intermediate support<br>3 with strain relief | 1 |

| | Open-bottom housing | Closed-bottom housing with two narrow-side entry cable glands | Closed bottom housing with one narrow-side entry cable gland on the left |
|---|---|---|---|
| | | | |

| Number of poles | Thread | Cable gland type | Stand. pack | Part no. | Part no. | Part no. |
|---|---|---|---|---|---|---|
| Housing size **16**<br>for multipole connectors<br>**6pole + ground** | M 25 | 0 with cable gland | 1 | 71.320.1628.0 | | |
| | | 1 with thread | 1 | | 71.330.1635.0 | 71.331.1635.0 |
| | | | 1 | | 71.330.1635.1 | 71.331.1635.1 |

# revos

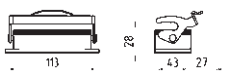


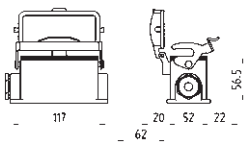


## 6pole + ground

Pole assignment

Male insert 6pole + ground

Female insert 6pole + ground

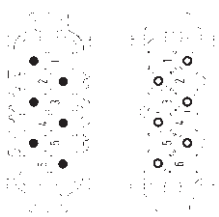

Dimensions of the multipole adapters

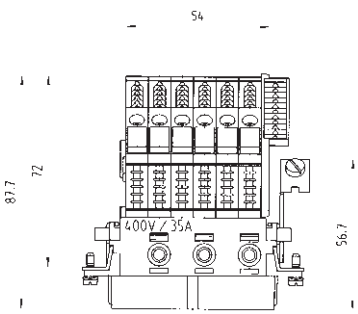


Mounting dimensions and cut-outs for open-bottom housings

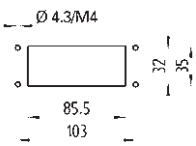


Mounting dimensions for closed-bottom housings

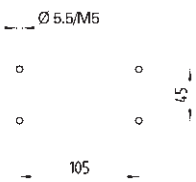


| Part no. |
|---|
| 70.200.0653.0 |
| 70.210.0653.0 |
| 70.005.0653.0<br>70.000.0653.0 |
| 70.015.0653.0<br>70.010.0653.0 |

| Hood | Hood | Hood | | | |
|---|---|---|---|---|---|
| | | | | | |
| Part no. | Part no. | Part no. | | | |
| 71.350.1635.0<br>71.350.1635.1<br>71.350.1635.2<br>71.350.1635.3 | 71.351.1635.0<br>71.351.1635.1<br>71.351.1635.2<br>71.351.1635.3 | 71.352.1635.0<br>71.352.1635.1<br>71.352.1635.2<br>71.352.1635.3 | | | |
| Closed-bottom housing with two bottom entry cable glands | Open-bottom housing with protective cover | Closed-bottom housing with two narrow-side entry cable glands and protective cover | Closed-bottom housing with narrow-side entry cable gland on the left and protective cover | Closed-bottom housing with narrow-side entry cable gland on the left and protective cover | Closed-bottom housing with bottom entry cable gland and protective cover |
| | | | | | |
| Part no. | Part no. | Part no. | Part no. | Part no. | Part no. |
| 71.333.1635.0<br>71.333.1635.1 | 71.325.1628.0 | 71.340.1635.0<br>71.340.1635.1 | 71.341.1635.0<br>71.341.1635.1 | 71.342.1635.0<br>71.342.1635.1 | 71.343.1635.0<br>71.343.1635.1 |

# Industrial multipole connectors, female and male inserts, multipole adapters, hoods and housings with double locking levers, 6pole

## revos POWER

**600 V** UL/CSA

**400 V, 35 A** IEC 61 984

**Degree of protection: IP 55; IP 65** with the appropriate cable glands

| | | Cross section | Approvals | Wire strip length | Material | Stand. pack |
|---|---|---|---|---|---|---|
| **Screw connection** | Female insert | 2.5 – 6 mm² 14 – 8 AWG | | 10 mm | silver-plated | 10 |
| | Male insert | 2.5 – 6 mm² 14 – 8 AWG | | 10 mm | silver-plated | 10 |
| **Screw connection** Multipole adapters | Female insert, ground right | 2.5 – 6 mm² 14 – 8 AWG | | 12 mm | silver-plated | 10 |
| | Female insert, ground left | | | 12 mm | silver-plated | 10 |
| | Male insert, ground right | 2.5 – 6 mm² 14 – 8 AWG | | 12 mm | silver-plated | 10 |
| | Male insert, ground left | | | 12 mm | silver-plated | 10 |

| Number of poles | Thread | Cable gland type | Stand. pack |
|---|---|---|---|
| Housing size **16** for multipole connectors **6pole + ground** | M 25 | 0 with cable gland<br>1 with thread<br>2 with intermediate support<br>3 with strain relief | 1 |

| Number of poles | Thread | Cable gland type | Stand. pack | Open-bottom housing<br> <br>Part no. | Closed-bottom housing with two narrow-side entry cable glands<br> <br>Part no. | Closed bottom housing with one narrow-side entry cable gland on the left<br> <br>Part no. |
|---|---|---|---|---|---|---|
| Housing size **16** for multipole connectors **6pole + ground** | M 25 | 0 with cable gland | 1 | 70.320.1628.0 | | |
| | | 1 with thread | 1 | | 70.330.1635.0 | 70.331.1635.0 |
| | | | 1 | | 70.330.1635.1 | 70.331.1635.1 |

# revos

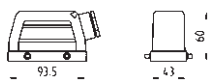


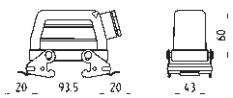


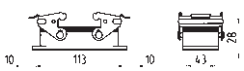


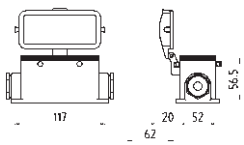


## 6pole + ground

Pole assignment

Male insert 6pole + ground

Female insert 6pole + ground

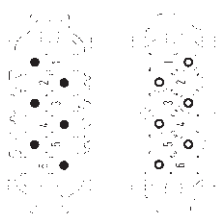

Dimensions of the multipole adapters

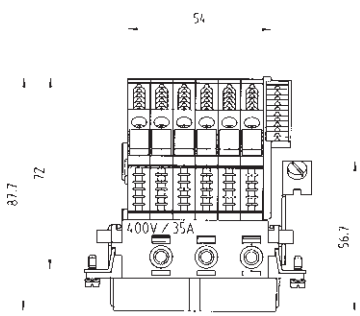


Mounting dimensions and cut-outs for open-bottom housings

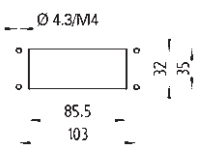


Mounting dimensions for closed-bottom housings

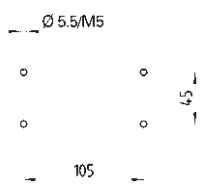


| Part no. |
|---|
| 70.200.0653.0 |
| 70.210.0653.0 |
| 70.005.0653.0<br>70.000.0653.0 |
| 70.015.0653.0<br>70.010.0653.0 |

Hood with cable gland

| Part no. |
|---|
| 70.350.1635.0<br>70.350.1635.1<br>70.350.1635.2<br>70.350.1635.3 |

Hood with cable gland

| Part no. |
|---|
| 70.351.1635.0<br>70.351.1635.1<br>70.351.1635.2<br>70.351.1635.3 |

Hood with cable gland

| Part no. |
|---|
| 70.352.1635.0<br>70.352.1635.1<br>70.352.1635.2<br>70.352.1635.3 |

Hood with cable gland and locking levers

| Part no. |
|---|
| 70.355.1635.0<br>70.355.1635.1<br>70.355.1635.2<br>70.355.1635.3 |

Hood with cable gland

| Part no. |
|---|
| 70.356.1635.0<br>70.356.1635.1<br>70.356.1635.2<br>70.356.1635.3 |

Hood with cable glands and locking levers

| Part no. |
|---|
| 70.357.1635.0<br>70.357.1635.1<br>70.357.1635.2<br>70.357.1635.3 |

Closed-bottom housing with two bottom entry cable glands

| Part no. |
|---|
| 70.333.1635.0<br>70.333.1635.1 |

Open-bottom housing with protective cover

| Part no. |
|---|
| 70.325.1628.0 |

Closed-bottom housing with two narrow-side entry cable glands and protective cover

| Part no. |
|---|
| 70.340.1635.0<br>70.340.1635.1 |

Closed-bottom housing with narrow-side entry cable gland on the left and protective cover

| Part no. |
|---|
| 70.341.1635.0<br>70.341.1635.1 |

Closed-bottom housing with narrow-side entry cable gland on the left and protective cover

| Part no. |
|---|
| 70.342.1635.0<br>70.342.1635.1 |

Closed-bottom housing with bottom entry cable gland and protective cover

| Part no. |
|---|
| 70.343.1635.0<br>70.343.1635.1 |

# Industrial multipole connectors, female and male inserts, multipole adapters, hoods and housings with single locking levers, 6pole

## revos POWER

**600 V** UL/CSA

**690 V, 35 A** IEC 61 984

**Degrees of protection: IP 55; IP 65** with the appropriate cable glands

| | | Cross section | Approvals | Wire strip length | Material | Stand. pack |
|---|---|---|---|---|---|---|
| **Screw connection** | Female insert | 2.5 – 6 mm² 14 – 8 AWG | | 10 mm | silver-plated | 10 |
| | Male insert | 2.5 – 6 mm² 14 – 8 AWG | | 10 mm | silver-plated | 10 |
| **Screw connection** Multipole adapters | Female insert, ground right | 2.5 – 6 mm² 14 – 8 AWG | | 12 mm | silver-plated | 10 |
| | Female insert, ground left | | | 12 mm | silver-plated | 10 |
| | Male insert, ground right | 2.5 – 6 mm² 14 – 8 AWG | | 12 mm | silver-plated | 10 |
| | Male insert, ground left | | | 12 mm | silver-plated | 10 |

| Number of poles | Thread | Cable gland type | Stand. pack |
|---|---|---|---|
| Housing size**16** for multipole connectors **6pole + ground** | M 25 | 0 with cable gland<br>1 with thread<br>2 with intermediate support<br>3 with strain relief | 1 |

| | Open-bottom housing | Closed-bottom housing with two narrow-side entry cable glands | Closed bottom housing with one narrow-side entry cable gland on the left |
|---|---|---|---|
| | | | |

| Number of poles | Thread | Cable gland type | Stand. pack | Part no. | Part no. | Part no. |
|---|---|---|---|---|---|---|
| Housing size**16** for multipole connectors **6pole + ground** | M 25 | 0 with cable gland | 1 | 71.320.1628.0 | | |
| | | 1 with thread | 1 | | 71.330.1635.0 | 71.331.1635.0 |
| | | | 1 | | 71.330.1635.1 | 71.331.1635.1 |

# revos

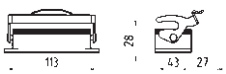


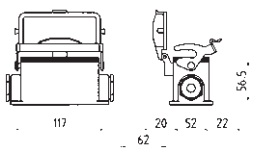


## 6pole + ground

Pole assignment

Male insert 6pole + ground

Female insert 6pole + ground

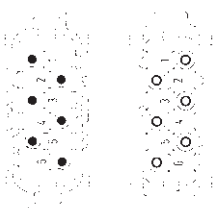

Dimensions of the multipole adapters

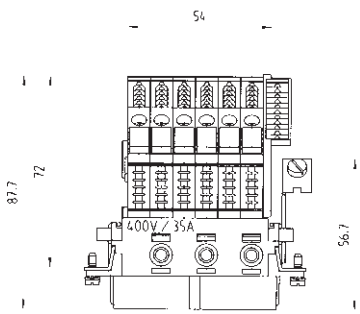


Mounting dimensions and cut-outs for open-bottom housings

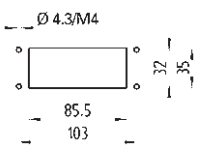


Mounting dimensions for closed-bottom housings

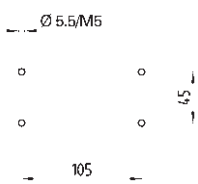


| Part no. |
|---|
| 72.200.0653.0 |
| 72.210.0653.0 |
| 72.005.0653.0<br>72.000.0653.0 |
| 72.015.0653.0<br>72.010.0653.0 |

| Hood with cable gland | Hood with cable gland | Hood with cable gland | | | |
|---|---|---|---|---|---|
| | | | | | |
| Part no. | Part no. | Part no. | | | |
| 71.350.1635.0<br>71.350.1635.1<br>71.350.1635.2<br>71.350.1635.3 | 71.351.1635.0<br>71.351.1635.1<br>71.351.1635.2<br>71.351.1635.3 | 71.352.1635.0<br>71.352.1635.1<br>71.352.1635.2<br>71.352.1635.3 | | | |
| Closed-bottom housing with two bottom entry cable glands | Open-bottom housing with protective cover | Closed-bottom housing with two narrow-side entry cable glands and protective cover | Closed-bottom housing with narrow-side entry cable gland on the left and protective cover | Closed-bottom housing with narrow-side entry cable gland on the left and protective cover | Closed-bottom housing with bottom entry cable gland and protective cover |
| | | | | | |
| Part no. | Part no. | Part no. | Part no. | Part no. | Part no. |
| 71.333.1635.0<br>71.333.1635.1 | 71.325.1628.0 | 71.340.1635.0<br>71.340.1635.1 | 71.341.1635.0<br>71.341.1635.1 | 71.342.1635.0<br>71.342.1635.1 | 71.343.1635.0<br>71.343.1635.1 |

# Industrie multipole connectors, female and male inserts, multipole adapters, hoods and housings with double locking levers, 6pole

## revos POWER

**600 V** UL/CSA

**690 V, 35 A** IEC 61 984

**Degrees of protection: IP 55; IP 65** with the appropriate cable glands

| | | Cross section | Approvals | Wire strip length | Material | Stand. pack |
|---|---|---|---|---|---|---|
| **Screw connection** | Female insert | 2.5 – 6 mm²<br>14 – 8 AWG | | 10 mm | tin-plated | 10 |
| | Male insert | 2.5 – 6 mm²<br>14 – 8 AWG | | 10 mm | tin-plated | 10 |
| **Screw connection**<br>Multipole adapters | Female insert, ground right | 2.5 – 6 mm²<br>14 – 8 AWG | | 12 mm | tin-plated | 10 |
| | Female insert, ground left | | | 12 mm | tin-plated | 10 |
| | Male insert, ground right | 2.5 – 6 mm²<br>14 – 8 AWG | | 12 mm | tin-plated | 10 |
| | Male insert, ground left | | | 12 mm | tin-plated | 10 |

| Number of poles | Thread | Cable gland type | Stand. pack |
|---|---|---|---|
| Housing size **16**<br>for multipole connectors<br>**6pole + ground** | M 25 | 0 with cable gland<br>1 with thread<br>2 with intermediate support<br>3 with strain relief | 1 |

| Number of poles | Thread | Cable gland type | Stand. pack | Open-bottom housing | Closed-bottom housing with two narrow-side entry cable glands | Closed bottom housing with one narrow-side entry cable gland on the left |
|---|---|---|---|---|---|---|
| | | | | | 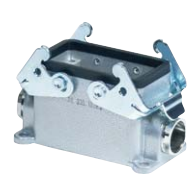 | |
| Housing size **16**<br>for multipole connectors<br>**6pole + ground** | M 25 | 0 with cable gland | 1 | 70.320.1628.0 | | |
| | | 1 with thread | 1 | | 70.330.1635.0 | 70.331.1635.0 |
| | | | 1 | | 70.330.1635.1 | 70.331.1635.1 |

# revos

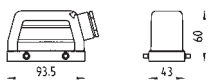


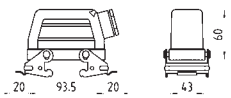


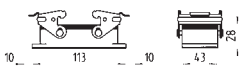


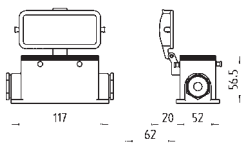


## 6pole + ground

Pole assignment

Male insert 6pole + ground

Female insert 6pole + ground

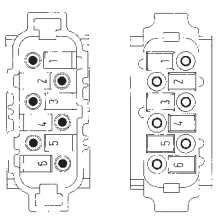

Dimensions of the multipole adapters

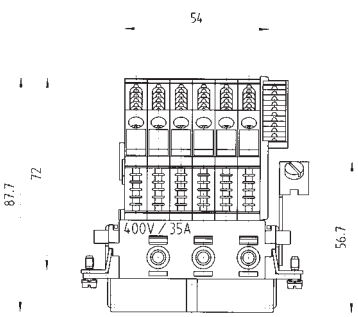


Mounting dimensions and cut-outs for open-bottom housings

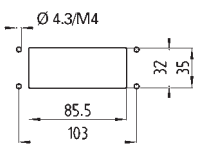


Mounting dimensions for closed-bottom housings

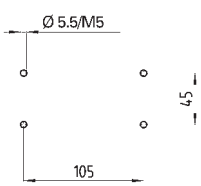


| Part no. |
|---|
| 72.200.0653.0 |
| 72.210.0653.0 |
| 72.005.0653.0<br>72.000.0653.0 |
| 72.015.0653.0<br>72.010.0653.0 |

| Hood | Hood | Hood | Hood with locking levers | Hood with locking levers | Hood with locking levers |
|---|---|---|---|---|---|
| | | | | | |
| Part no. | Part no. | Part no. | Part no. | Part no. | Part no. |
| 70.350.1635.0<br>70.350.1635.1<br>70.350.1635.2<br>70.350.1635.3 | 70.351.1635.0<br>70.351.1635.1<br>70.351.1635.2<br>70.351.1635.3 | 70.352.1635.0<br>70.352.1635.1<br>70.352.1635.2<br>70.352.1635.3 | 70.355.1635.0<br>70.355.1635.1<br>70.355.1635.2<br>70.355.1635.3 | 70.356.1635.0<br>70.356.1635.1<br>70.356.1635.2<br>70.356.1635.3 | 70.357.1635.0<br>70.357.1635.1<br>70.357.1635.2<br>70.357.1635.3 |

| Closed-bottom housing with two bottom entry cable glands | Open-bottom housing with protective cover | Closed-bottom housing with two narrow-side entry cable glands and protective cover | Closed-bottom housing with narrow-side entry cable gland on the left and protective cover | Closed-bottom housing with narrow-side entry cable gland on the left and protective cover | Closed-bottom housing with bottom entry cable gland and protective cover |
|---|---|---|---|---|---|
| | | | | | |
| Part no. | Part no. | Part no. | Part no. | Part no. | Part no. |
| 70.333.1635.0<br>70.333.1635.1 | 70.325.1628.0 | 70.340.1635.0<br>70.340.1635.1 | 70.341.1635.0<br>70.341.1635.1 | 70.342.1635.0<br>70.342.1635.1 | 70.343.1635.0<br>70.343.1635.1 |

# Industrial multipole connectors, female and male inserts, multipole adapters, hoods and housings with single locking levers, 4pole

## revos POWER

**600 V** UL/CSA

**690 V/400 V, 82 A** IEC 61 984

**Degrees of protection: IP 55; IP 65** with the appropriate cable glands

| | | Cross section | Approvals | Wire strip length | Material | Stand. pack |
|---|---|---|---|---|---|---|
| **Screw connection** | Female insert | 6 – 16 mm²<br>10 – 4 AWG | | 10 mm | silver-plated | 10 |
| | Male insert | 6 – 16 mm²<br>10 – 4 AWG | | 10 mm | silver-plated | 10 |

| Number of poles | Thread | Cable gland type | Stand. pack |
|---|---|---|---|
| Housing size **16**<br>for multipole connectors<br>**4pole + ground** | M 32 | 0 with cable gland<br>1 with thread<br>2 with intermediate support<br>3 with strain relief | 1 |

| Number of poles | Thread | Cable gland type | Stand. pack | Open-bottom housing | Closed-bottom housing with two narrow-side entry cable glands | Closed bottom housing with one narrow-side entry cable gland on the left |
|---|---|---|---|---|---|---|
| | | | | | | |
| | | | | Part no. | Part no. | Part no. |
| Housing size **16**<br>for multipole connectors<br>**4pole + ground** | M 32 | 0 with cable gland<br>1 with thread | | 71.320.1628.0 | 76.334.4035.0<br>76.334.4035.1 | 76.335.4035.0<br>76.335.4035.1 |

# revos

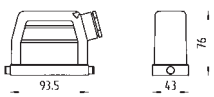


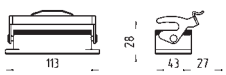


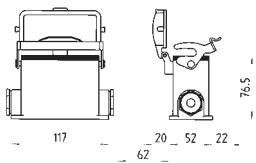


## 4pole + ground

Pole assignment

| Male insert | Female insert |
|---|---|
| 4pole + ground | 4pole + ground |

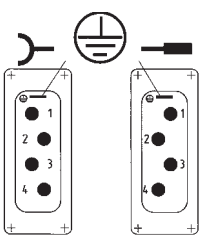


Mounting dimensions and cut-outs for open-bottom housings

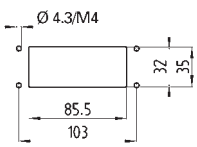


Mounting dimensions for closed-bottom housings

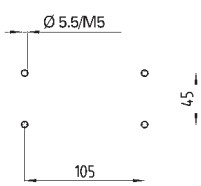


| Part no. |
|---|
| 72.208.0453.0 |
| 72.218.0453.0 |

| Hood | Hood | | | | |
|---|---|---|---|---|---|
| | | | | | |
| Part no. | Part no. | | | | |
| 76.353.4035.0<br>76.353.4035.1<br>76.353.4035.2<br>76.353.4035.3 | 76.352.4035.0<br>76.352.4035.1<br>76.352.4035.2<br>76.352.4035.3 | | | | |
| Closed-bottom housing with two bottom entry cable glands | Open-bottom housing with protective cover | Closed-bottom housing with two narrow-side entry cable glands and protective cover | Closed-bottom housing with narrow-side entry cable gland on the left and protective cover | Closed-bottom housing with narrow-side entry cable gland on the left and protective cover | Closed-bottom housing with bottom entry cable gland and protective cover |
| | | | | | |
| Part no. | Part no. | Part no. | Part no. | Part no. | Part no. |
| 76.337.4035.0<br>76.337.4035.1 | 71.325.1628.0 | 76.344.4035.0<br>76.344.4035.1 | 76.345.4035.0<br>76.345.4035.1 | 76.346.4035.0<br>76.346.4035.1 | 76.347.4035.0<br>76.347.4035.1 |

# Industrial multipole connectors, female and male inserts, multipole adapters, hoods and housings with double locking levers, 4/6pole

## revos POWER

**600 V** UL/CSA

**690 V, 35/16 A** IEC 61 984

**Degrees of protection: IP 55; IP 65** with the appropriate cable glands

| | | Cross section | Approvals | Wire strip length | Material | Stand. pack |
|---|---|---|---|---|---|---|
| **Screw connection** | Female insert<br>4 poles silver-plated<br>6 poles tin-plated | 2.5 – 6 mm²<br>14 – 8 AWG<br>1 – 2.5 mm²<br>16 – 12 AWG | | 10 mm<br>7 mm | silver-plated<br>tin-plated | 10 |
| | Male insert<br>4 poles silver-plated<br>6 poles tin-plated | 2.5 – 6 mm²<br>14 – 8 AWG<br>1 – 2.5 mm²<br>16 – 12 AWG | | 10 mm<br>7 mm | silver-plated<br>tin-plated | 10 |
| **Screw connection**<br>Multipole adapter<br>500 V, 35/16 A<br>IEC 61 984 | Female insert, ground right<br>4 poles silver-plated<br>6 poles tin-plated | 2.5 – 6 mm²<br>14 – 8 AWG<br>1.5 – 4 mm²<br>16 – 12 AWG | | 12 mm<br>12 mm | silver-plated<br>tin-plated | 10 |
| | Male insert, ground right<br>4 poles silver-plated<br>6 poles tin-plated | 2.5 – 6 mm²<br>14 – 8 AWG<br>1.5 – 4 mm²<br>16 – 12 AWG | | 12 mm<br>12 mm | silver-plated<br>tin-plated | 10 |

| Number of poles | Thread | Cable gland type | Stand. pack |
|---|---|---|---|
| Housing size **16**<br>for multipole connectors<br>**4/6pole + ground** | M 25 | 0 with cable gland<br>1 with thread<br>2 with intermediate support<br>3 with strain relief | 1 |

| Number of poles | Thread | Cable gland type | Stand. pack | Open-bottom housing<br> Part no. | Closed-bottom housing with two narrow-side entry cable glands<br> Part no. | Closed bottom housing with one narrow-side entry cable gland on the left<br> Part no. |
|---|---|---|---|---|---|---|
| Housing size **16**<br>for multipole connectors<br>**4/6pole + ground** | M 25 | | 1 | 72.320.1628.0 | | |
| | | 0 with cable gland | 1 | | 72.330.1635.0 | 72.331.1635.0 |
| | | 1 with thread | 1 | | 72.330.1635.1 | 72.331.1635.1 |

# revos

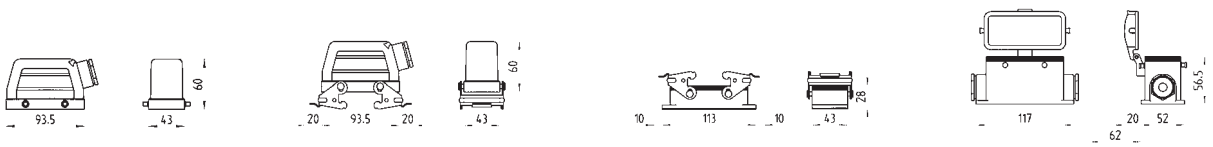


## 4/ 6pole + ground

Pole assignment

Male insert 4/6pole + ground

Female insert 4/6pole + ground

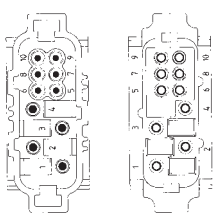

Dimensions of the multipole adapters

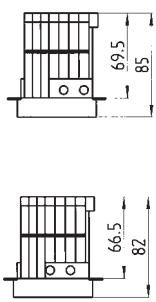


Mounting dimensions and cut-outs for open-bottom housings

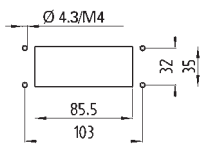


Mounting dimensions for closed-bottom housings

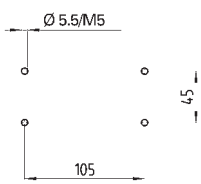


| Part no. |
|---|
| 72.205.1053.0 |
| 72.215.1053.0 |
| 72.107.1053.0 |
| 72.117.1053.0 |

| Hood | Hood | Hood with locking levers | Hood with locking levers | | |
|---|---|---|---|---|---|
| | | | | | |
| Part no. | Part no. | Part no. | Part no. | | |
| 72.350.1635.0<br>72.350.1635.1<br>72.350.1635.2<br>72.350.1635.3 | 72.352.1635.0<br>72.352.1635.1<br>72.352.1635.2<br>72.352.1635.3 | 72.355.1635.0<br>72.355.1635.1<br>72.355.1635.2<br>72.355.1635.3 | 72.357.1635.0<br>72.357.1635.1<br>72.357.1635.2<br>72.357.1635.3 | | |

| Closed-bottom housing with two bottom entry cable glands | Open-bottom housing with protective cover | Closed-bottom housing with two narrow-side entry cable glands and protective cover | Closed-bottom housing with narrow-side entry cable gland on the left and protective cover | Closed-bottom housing with narrow-side entry cable gland on the left and protective cover | Closed-bottom housing with bottom entry cable gland and protective cover |
|---|---|---|---|---|---|
| | | | | | |
| Part no. | Part no. | Part no. | Part no. | Part no. | Part no. |
| 72.333.1635.0<br>72.333.1635.1 | 72.325.1628.0 | 72.340.1635.0<br>72.340.1635.1 | 72.341.1635.0<br>72.341.1635.1 | 72.342.1635.0<br>72.342.1635.1 | 72.343.1635.0<br>72.343.1635.1 |

# Industrial multipole connectors, female and male inserts, multipole adapters, hoods and housings with single locking levers, 4/6pole

## revos POWER

**600 V** UL/CSA

**690 V, 35/16 A** IEC 61 984

**Degrees of protection: IP 55; IP 65** with the appropriate cable glands

| | | Cross section | Approvals | Wire strip length | Material | Stand. pack |
|---|---|---|---|---|---|---|
| **Screw connection** | Female insert<br>4 poles silver-plated<br>6 poles tin-plated | 2.5 – 6 mm²<br>14 – 8 AWG<br>1 – 2.5 mm²<br>16 – 12 AWG | | 10 mm<br>7 mm | silver-plated<br>tin-plated | 10 |
| | Male insert<br>4 poles silver-plated<br>6 poles tin-plated | 2.5 – 6 mm²<br>14 – 8 AWG<br>1 – 2.5 mm²<br>16 – 12 AWG | | 10 mm<br>7 mm | silver-plated<br>tin-plated | 10 |
| **Screw connection**<br>Multipole adapter 500 V, 35/16 A<br>8 kV/3 VDE 0110 | Female insert, ground right<br>4 poles silver-plated<br>6 poles tin-plated | 2.5 – 6 mm²<br>14 – 8 AWG<br>1.5 – 4 mm²<br>16 – 12 AWG | | 12 mm<br>12 mm | silver-plated<br>tin-plated | 10 |
| | Male insert, ground right<br>4 poles silver-plated<br>6 poles tin-plated | 2.5 – 6 mm²<br>14 – 8 AWG<br>1.5 – 4 mm²<br>16 – 12 AWG | | 12 mm<br>12 mm | silver-plated<br>tin-plated | 10 |

| Number of poles | Thread | Cable gland type | Stand. pack |
|---|---|---|---|
| Housing size**16**<br>for multipole connectors<br>**4/6pole + ground** | M 25 | 0 with cable gland<br>1 with thread<br>2 with intermediate support<br>3 with strain relief | 1 |

| Number of poles | Thread | Cable gland type | Stand. pack | Open-bottom housing<br> <br>Part no. | Closed-bottom housing with two narrow-side entry cable glands<br> <br>Part no. | Closed bottom housing with one narrow-side entry cable gland on the left<br> <br>Part no. |
|---|---|---|---|---|---|---|
| Housing size**16**<br>for multipole connectors<br>**4/6pole + ground** | M 25 | | 1 | 77.320.1628.0 | | |
| | | 0 with cable gland | 1 | | 77.330.1635.0 | 77.331.1635.0 |
| | | 1 with thread | 1 | | 77.330.1635.1 | 77.331.1635.1 |

# revos

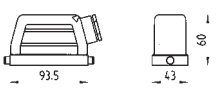


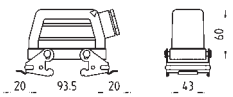


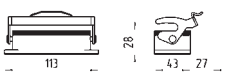


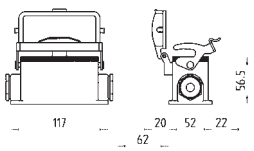


## 4/6pole + ground

Pole assignment

Male insert 4/6pole + ground

Female insert 4/6pole + ground

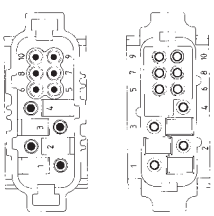

Dimensions of the multipole adapters (shown in mm)

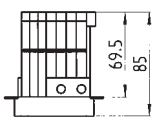


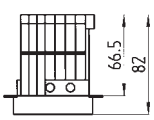


Mounting dimensions and cut-outs for open-bottom housings (shown in mm)

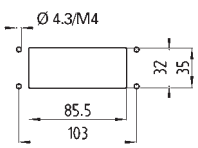


Mounting dimensions for closed-bottom housings

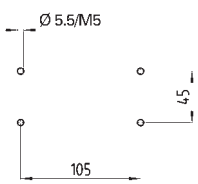


| Part no. |
|---|
| 72.205.1053.0 |
| 72.215.1053.0 |
| 72.107.1053.0 |
| 72.117.1053.0 |

| Hood | Hood | | | | |
|---|---|---|---|---|---|
| | | | | | |
| Part no. | Part no. | | | | |
| 77.350.1635.0<br>77.350.1635.1<br>77.350.1635.2<br>77.350.1635.3 | 77.352.1635.0<br>77.352.1635.1<br>77.352.1635.2<br>77.352.1635.3 | | | | |
| Closed-bottom housing with two bottom entry cable glands | Open-bottom housing with protective cover | Closed-bottom housing with two narrow-side entry cable glands and protective cover | Closed-bottom housing with narrow-side entry cable gland on the left and protective cover | Closed-bottom housing with narrow-side entry cable gland on the left and protective cover | Closed-bottom housing with bottom entry cable gland and protective cover |
| | | | | | |
| Part no. | Part no. | Part no. | Part no. | Part no. | Part no. |
| 77.333.1635.0<br>77.333.1635.1 | 77.325.1628.0 | 77.340.1635.0<br>77.340.1635.1 | 77.341.1635.0<br>77.341.1635.1 | 77.342.1635.0<br>77.342.1635.1 | 77.343.1635.0<br>77.343.1635.1 |

# Industrial multipole connectors, female and male inserts, multipole adapters, hoods and housings, 6/6pole

**revos** POWER

**Multipole connectors 40/16 A, with mixed contacts**

**600 V** UL/CSA

**690/400 V, 40 A** IEC 61 984

**400/230 V, 16 A** IEC 61 984

**Degrees of protection: IP 55; IP 65** with the appropriate cable glands

| | Rated current | Cross section | Approvals | Wire strip length | Material | Stand. pack |
|---|---|---|---|---|---|---|
| **Screw connection** | Female insert | | | | | 10 |
| | 6 poles | 40 A 4 – 10 mm² 12 – 6 AWG | | 10 mm | silver-plated | |
| | 6 poles | 16 A 1 – 2.5 mm² 16 – 12 AWG | | 7 mm | tin-plated | |
| | Male insert | | | | | 10 |
| | 6 poles | 40 A 4 – 10 mm² 12 – 6 AWG | | 10 mm | silver-plated | |
| | 6 poles | 16 A 1 – 2.5 mm² 16 – 12 AWG | | 7 mm | tin-plated | |
| Hood with intermediate support | | | | | | |
| Number of poles | Thread | Cable gland type | | | | Stand. pack |
| Housing size**16** for multipole connectors **6/6pole + ground** | M 40 | 2 with intermediate support | | | | 1 |
| Open-bottom housing | | | | | | |
| Number of poles | | | | | | Stand. pack |
| Housing size**16** for multipole connectors **6/ 6pole + ground** | | | | | | 1 |

# revos

## 6/6pole + ground

Pole assignment

Male insert 6/6pole + ground

Female insert 6/6pole + ground

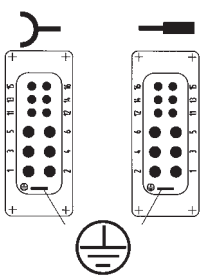

Part no.

72.205.1253.0

72.215.1253.0

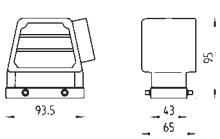


Part no.

72.250.1635.2

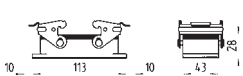


Part no.

72.320.1628.0

Mounting dimensions and cut-outs for open-bottom housings (shown in mm)

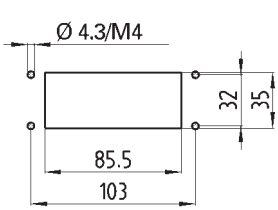

# Industrial multipole connectors, female and male inserts, multipole adapters, hoods and housings, 3/3/6pole

**revos** POWER

**Multipole connectors 100/40/16 A, with mixed contacts**

**600 V** UL/CSA
**690/400 V**

**100 A** IEC 61 984
**40 A** IEC 61 984
**16 A** IEC 61 984

**Degrees of protection: IP 55; IP 65** with the appropriate cable glands

| | Rated current | | Cross section | Approvals | Wire strip length | Material | Stand. pack |
|---|---|---|---|---|---|---|---|
| **Screw connection** | Female insert<br>3 poles<br>3 poles<br>6 poles | <br>100 A<br>40 A<br>16 A | <br>10 – 25 mm²<br>4 – 10 mm²<br>1 – 2.5 mm² | <br>cULus<br>CSA | <br>14 mm<br>10 mm<br>7 mm | <br>silver-plated<br>silver-plated<br>tin-plated | 10 |
| | Male insert<br>3 poles<br>3 poles<br>6 poles | <br>100 A<br>40 A<br>16 A | <br>10 – 25 mm²<br>4 – 10 mm²<br>1 – 2.5 mm² | <br>cULus<br>CSA | <br>14 mm<br>10 mm<br>7 mm | <br>silver-plated<br>silver-plated<br>tin-plated | 10 |
| Hood with intermediate support | | | | | | | |
| Number of poles | Thread | Cable gland type | | | | | Stand. pack |
| Housing size **24**<br>for multipole connectors<br>**3/3/6pole + ground** | M 50 | 2 with intermediate support | | | | | 1 |
| Open-bottom housing | | | | | | | |
| Number of poles | | | | | | | Stand. pack |
| Housing size **24**<br>for multipole connectors<br>**3/3/6pole + ground** | | | | | | | 1 |

# revos

## 3/3/6pole + ground

Pole assignment

Male insert 3/3/6pole + ground

Female insert 3/3/6pole + ground

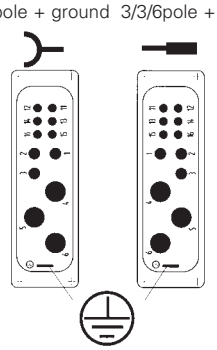

Part no.

72.203.1253.0

72.213.1253.0

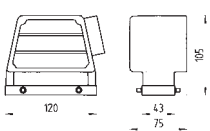


Part no.

72.250.2435.2

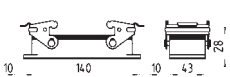


Part no.

72.320.2428.0

Mounting dimensions and cut-outs for open-bottom housings (shown in mm)

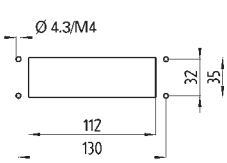

# Industrial multipole connectors, female and male inserts, hoods and housings with single locking levers, 4/2pole

## revos POWER

**Multipole connectors 82/16 A, with mixed contacts**

**600 V** UL/CSA

**690 V** **82 A** IEC 61 984 (**70 A** CSA)

**400 V** **16 A** IEC 61 984

**Degrees of protection: IP 55; IP 65** with the appropriate cable glands

| | Rated current | Cross section | Approvals | Wire strip length | Material | Stand. pack |
|---|---|---|---|---|---|---|
| **Screw connection** | Female insert | | | | | 10 |
| | 4 poles 82 A (70 A CSA) | 6 – 16 mm² 10 – 4 AWG | | 15 mm | silver-plated | |
| | 2 poles 16 A | 1 – 2.5 mm² 16 – 12 AWG | | 9 mm | tin-plated | |
| | Male insert | | | | | 10 |
| | 4 poles 82 A(70 A CSA) | 6 – 16 mm² 10 – 4 AWG | | 15 mm | silver-plated | |
| | 2 poles 16 A | 1 – 2.5 mm² 16 – 12 AWG | | 9 mm | tin-plated | |

| Number of poles | Thread | Cable gland type | Stand. pack |
|---|---|---|---|
| Housing size**16**<br>for multipole connectors<br>**4/2pole + ground** | M 32 | 0 with cable gland<br>1 with thread<br>2 with intermediate support<br>3 with strain relief | 1 |

| Number of poles | Thread | Cable gland type | Stand. pack | Open-bottom housing | Closed-bottom housing with two narrow-side entry cable glands | Closed bottom housing with one narrow-side entry cable gland on the left |
|---|---|---|---|---|---|---|
| | | | | | | |
| Housing size**16** | | | 1 | 71.320.1628.0 | | |
| for multipole connectors | M 32 | 0 with cable gland | 1 | | 76.334.4035.0 | 76.335.4035.0 |
| **4/2pole + ground** | | 1 with thread | 1 | | 76.334.4035.1 | 76.335.4035.1 |

# revos

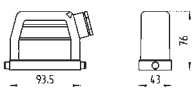


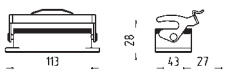


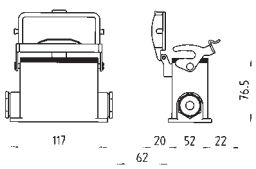


## 4/2pole + ground

Pole assignment

Male insert
4/2pole + ground

Female insert
4/2pole + ground

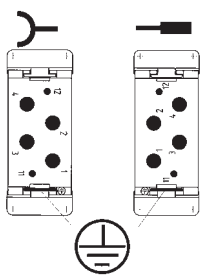

Mounting dimensions and cut-outs for open-bottom housings (shown in mm)

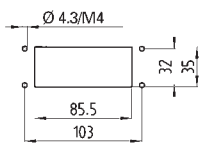


Mounting dimensions for closed-bottom housings (shown in mm)

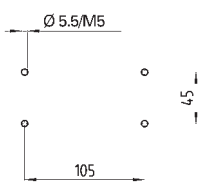


| Part no. | | | | | |
|---|---|---|---|---|---|
| 72.205.0653.0 | | | | | |
| 72.215.0653.0 | | | | | |
| Hood | Hood | | | | |
| Part no. | Part no. | | | | |
| 76.353.4035.0<br>76.353.4035.1<br>76.353.4035.2<br>76.353.4035.3 | 76.354.4035.0<br>76.354.4035.1<br>76.354.4035.2<br>76.354.4035.3 | | | | |
| Closed-bottom housing with two bottom entry cable glands | Open-bottom housing with protective cover | Closed-bottom housing with two narrow-side entry cable glands and protective cover | Closed-bottom housing with narrow-side entry cable gland on the left and protective cover | Closed-bottom housing with narrow-side entry cable gland on the left and protective cover | Closed-bottom housing with bottom entry cable gland and protective cover |
| Part no. | Part no. | Part no. | Part no. | Part no. | Part no. |
| 76.337.4035.0<br>76.337.4035.1 | 71.325.1628.0 | 76.344.4035.0<br>76.344.4035.1 | 76.345.4035.0<br>76.345.4035.1 | 76.346.4035.0<br>76.346.4035.1 | 76.347.4035.0<br>76.347.4035.1 |

# Industrial multipole connectors, female and male inserts, hoods and housings with double locking levers, 4/2pole

## revos POWER

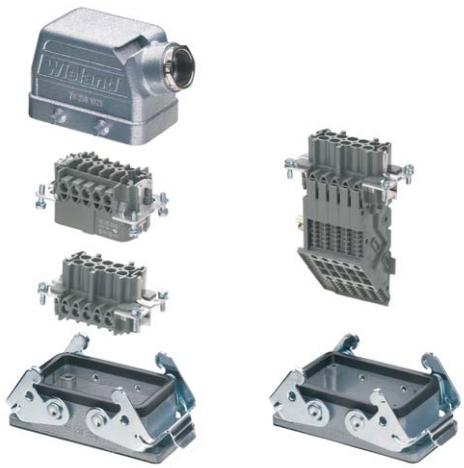

**Multipole connectors 82/16 A, with mixed contacts**

**600 V** UL/CSA
**690 V** **82 A** IEC 61 984 (70 A CSA)
**400 V** **16 A** IEC 61 984

**Degrees of protection: IP 55; IP 65** with the appropriate cable glands

| | Rated current | | Cross section | Approvals | Wire strip length | Material | Stand. pack |
|---|---|---|---|---|---|---|---|
| **Screw connection** | Female insert | | | | | | 10 |
| | 4 poles | 82 A (70 A CSA) | 6 – 16 mm² | 10 – 4 AWG | | 15 mm | silver-plated |
| | 2 poles | 16 A | 1 – 2.5 mm² | 16 – 12 AWG | | 9 mm | tin-plated |
| | Male insert | | | | | | 10 |
| | 4 poles | 82 A (70 A CSA) | 6 – 16 mm² | 10 – 4 AWG | | 15mm | silver-plated |
| | 2 poles | 16 A | 1 – 2.5 mm² | 16 – 12 AWG | | 9 mm | tin-plated |

| Number of poles | Thread | Cable gland type | Stand. pack |
|---|---|---|---|
| Housing size**16**<br>for multipole connectors<br>**4/2pole + ground** | M 32 | 0 with cable gland<br>1 with thread<br>2 with intermediate support<br>3 with strain relief | 1 |

| Number of poles | Thread | Cable gland type | Stand. pack | Open-bottom housing<br> Part no. | Closed-bottom housing with two narrow-side entry cable glands<br> Part no. | Closed bottom housing with one narrow-side entry cable gland on the left<br> Part no. |
|---|---|---|---|---|---|---|
| Housing size**16**<br>for multipole connectors<br>**4/2pole + ground** | M 32 | | 1 | 70.320.1628.0 | | |
| | | 0 with cable gland | 1 | | 73.334.4035.0 | 73.335.4035.0 |
| | | 1 with thread | 1 | | 73.334.4035.1 | 73.335.4035.1 |

# revos

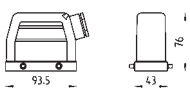


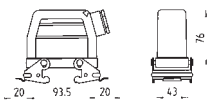


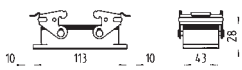


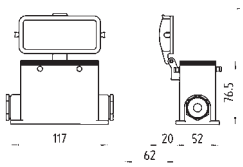


## 4/2pole + ground

Pole assignment

Male insert 4/2pole + ground

Female insert 4/2pole + ground

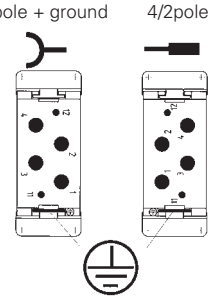

Mounting dimensions and cut-outs for open-bottom housings (shown in mm)

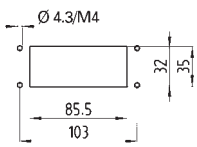


Mounting dimensions for closed-bottom housings (shown in mm)

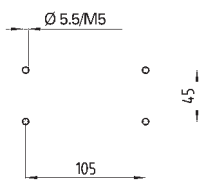


| Hood | Hood | Hood with locking levers | Hood with locking levers | | |
|---|---|---|---|---|---|
| | | | | | |
| Part no. | Part no. | Part no. | Part no. | | |
| 73.353.4035.0<br>73.353.4035.1<br>73.353.4035.2<br>73.353.4035.3 | 73.352.4035.0<br>73.352.4035.1<br>73.352.4035.2<br>73.352.4035.3 | 73.358.4035.0<br>73.358.4035.1<br>73.358.4035.2<br>73.358.4035.3 | 73.357.4035.0<br>73.357.4035.1<br>73.357.4035.2<br>73.357.4035.3 | | |
| Closed-bottom housing with two bottom entry cable glands | Open-bottom housing with protective cover | Closed-bottom housing with two narrow-side entry cable glands and protective cover | Closed-bottom housing with narrow-side entry cable gland on the left and protective cover | Closed-bottom housing with narrow-side entry cable gland on the left and protective cover | Closed-bottom housing with bottom entry cable gland and protective cover |
| | | | | | |
| Part no. | Part no. | Part no. | Part no. | Part no. | Part no. |
| 73.337.4035.0<br>73.337.4035.1 | 70.325.1628.0 | 73.344.4035.0<br>73.344.4035.1 | 73.345.4035.0<br>73.345.4035.1 | 73.346.4035.0<br>73.346.4035.1 | 73.347.4035.0<br>73.347.4035.1 |

# revos MINI

## Technical information

| | |
|---|---|
| ■ **Approvals** | UL, CSA, SEV |
| ■ **Applicable standards** | IEC 61 984 |
| ■ **Contact inserts** | |
| Rated current | 10 A |
| Rated voltage | |
| – 3pole + ground in plastic housing | 400 V |
| – 3pole + ground in metal housing | 250/400 V |
| – 4pole + ground (plastic and metal housing) | 400 V |
| – 7pole + ground in plastic housing | 250 V |
| – 7pole + ground in metal housing | 50 V |
| – 8pole (plastic and metal housing) | 50 V |
| Nominal voltage accord. to UL/CSA | |
| – 3/4pole + ground (plastic and metal housing) | 600 V |
| – 7pole + ground in plastic housing | 600 V |
| – 7pole + ground in metal housing | 42 V |
| – 8pole + ground (plastic and metal housing) | 42 V |
| Pole configurations | 3, 4, 7 + ground, 8 |
| Screw connection | 0.5 – 2.5 $mm^2$ / 22 – 12 AWG |
| Crimp connection | 0.2 – 1.5 $mm^2$ / 24 – 16 AWG |
| Degree of pollution | 3 |
| Temperature range | –40 to +110 °C |
| ■ **Contacts** | |
| Material | copper alloy |
| Surface | tin-plated, gold-plated, silver-plated |
| ■ **Hoods and housings** | |
| Material | die cast aluminum alloy<br>Thermoplast |
| Surface | gray |
| Locking levers | zinc-plated steel |
| Gaskets | NBR |
| Temperature range | –40 to +110 °C |
| Degree of protection accord. to DIN EN 60 529 | |
| with latched locking levers | IP 54 |
| with suitable cable gland | IP 65 |

revos

# Industrial Multipole Connectors

# Industrial multipole connectors
## 3/4/7pole + ground / 8pole

# revos MINI

**600 V** UL/CSA

**250 V, 10 A** IEC 61 984

**Degrees of protection: IP 54; IP 65** with the appropriate cable glands

| | | Cross section | Approvals | Wire strip length | Material | Stand. pack |
|---|---|---|---|---|---|---|
| **Screw connection** | Female insert | 0.5 – 2.5 mm²<br>3pole 18 – 16 AWG UL<br>4pole 22 – 12 AWG UL<br>3-/4pole 22 – 12 AWG CSA | * for 3 pole | 4 mm | tin-plated (3pole)<br>silver-plated (4pole) | 10 |
| | Male insert | 0.5 – 2.5 mm²<br>3pole 18 – 16 AWG UL<br>4pole 22 – 12 AWG UL<br>3-/4pole 22 – 12 AWG CSA | * for 3 pole | 4 mm | tin-plated (3pole)<br>silver-plated (4pole) | 10 |
| **Crimp connection** | Female insert without crimp contacts | 0.2 – 1.5 mm²<br>18 – 16 AWG UL<br>24 – 16 AWG CSA | | 4 mm | | 10 |
| | Male insert without crimp contacts | 0.2 – 1.5 mm²<br>18 – 16 AWG UL<br>24 – 16 AWG CSA | | 4 mm | | 10 |

| | Thread size | | Cable gland type | Material | Stand. pack |
|---|---|---|---|---|---|
| 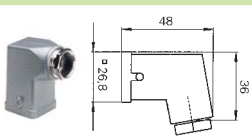  | M 20 | Hood, angled | 0 with cable gland<br>1 with thread<br>1 with thread | Metal<br>Metal<br>Plastic | 10<br>10<br>10 |
| 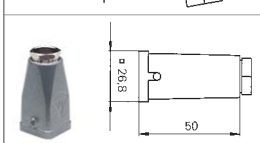  | M 20 | Hood, straight | 0 with cable gland<br>1 with thread<br>1 with thread | Metal<br>Metal<br>Plastic | 10<br>10<br>10 |
| 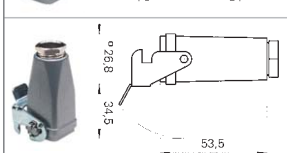  | M 20 | Hood, with clip for cable to cable couplings | 0 with complete cable gland<br>1 with thread<br>1 with thread | Metal<br>Metal<br>Plastic | 10<br>10<br>10 |
| 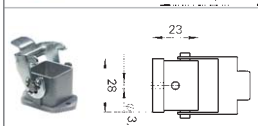  | | Open-bottom housing | | Metal<br>Plastic | 10<br>10 |
| 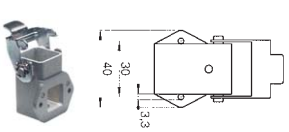  | | Open-bottom housing, angled | | Metal<br>Plastic | 10<br>10 |
| 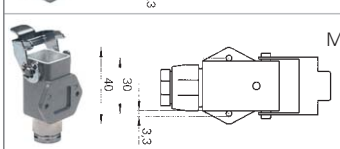  | M 20 | Closed-bottom housings<br>The closed-bottom housing in plastic material is supplied without gland | 0 with cable gland<br>1 with thread<br>1 with thread | Metal<br>Metal<br>Plastic | 10<br>10<br>10 |

# revos

## Contacts for crimp version

**Female contacts**

**Male contacts**

| Ø mm² | AWG | Part no. | Stand. pack |
|---|---|---|---|
| 0.2 – 0.56 mm² | 24 – 20 | tin-plated | |
| Reel contacts | | 02.124.0900.0 | 5000 |
| Single contacts | | 02.124.0929.0 | 200 |
| 0.75 – 1.50 mm² | 18 – 16 | | |
| Reel contacts | | 02.124.1000.0 | 5000 |
| Single contacts | | 02.124.1029.0 | 200 |
| 0.2 – 0.56 mm² | 24 – 20 | | |
| Reel contacts | | 05.544.0900.0 | 5000 |
| Single contacts | | 05.544.0929.0 | 200 |
| 0.75 – 1.50 mm² | 18 – 16 | | |
| Reel contacts | | 05.544.1000.0 | 5000 |
| Single contacts | | 05.544.1029.0 | 200 |

| Ø mm² | AWG | Part no. | Stand. pack |
|---|---|---|---|
| 0.5 – 1.50 mm² | 24 – 20 | gold-plated | |
| Reel contacts | | 02.124.1400.0 | 5000 |
| Single contacts | | 02.124.1429.0 | 200 |
| 0.5 – 1.50 mm² | 20 – 16 | | |
| Reel contacts | | 05.544.1400.0 | 5000 |
| Single contacts | | 05.544.1429.0 | 200 |
| Crimping tool | | 95.101.0800.0 | 1 |
| Crimping die "E" | | 05.502.2400.0 | 1 |
| Contact positioner "2" | | 05.502.3200.0 | 1 |
| Extraction tool | | 05.502.0000.0 | 1 |

| 3pole + ground | 4pole + ground | 7pole + ground | 8pole |
|---|---|---|---|
| **Plastic housing** UL/CSA<br>400 V/4 kV, 10 A 600 V<br>**Metal housing**<br>250 V/400 V/4 kV, 10 A 600V | **Plastic housing** UL/CSA<br>250 V/4 kV, 10 A 600 V<br>**Metal housing**<br>250 V/4 kV, 10 A 600 V | **Plastic housing** UL/CSA<br>250 V/4 kV, 10 A 600 V<br>**Metal housing**<br>50 V/0,8 kV, 10 A 42 V | **Plastic housing** UL/CSA<br>50 V/0,8 kV, 10 A 42 V<br>**Metal housing**<br>50 V/0,8 kV, 10 A 42 V |
| Part no. | Part no. | Part no. | Part no. |
| 73.300.0353.0 | 73.300.0453.0 | | |
| 73.310.0353.0 | 73.310.0453.0 | | |
| | | 73.700.0753.0 | 73.700.0853.0 |
| | | 73.710.0753.0 | 73.710.0853.0 |
| | | | |
| 76.350.0736.0<br>76.350.0736.1<br>76.350.0760.1 | 76.350.0736.0<br>76.350.0736.1<br>76.350.0760.1 | 76.350.0736.0<br>76.350.0736.1<br>76.350.0760.1 | 76.350.0736.0<br>76.350.0736.1<br>76.350.0760.1 |
| 76.352.0736.0<br>76.352.0736.1<br>76.352.0760.1 | 76.352.0736.0<br>76.352.0736.1<br>76.352.0760.1 | 76.352.0736.0<br>76.352.0736.1<br>76.352.0760.1 | 76.352.0736.0<br>76.352.0736.1<br>76.352.0760.1 |
| 76.372.0736.0<br>76.372.0736.1<br>76.372.0760.1 | 76.372.0736.0<br>76.372.0736.1<br>76.372.0760.1 | 76.372.0736.0<br>76.372.0736.1<br>76.372.0760.1 | 76.372.0736.0<br>76.372.0736.1<br>76.372.0760.1 |
| 76.320.0729.0<br>76.320.0753.0 | 76.320.0729.0<br>76.320.0753.0 | 76.320.0729.0<br>76.320.0753.0 | 76.320.0729.0<br>76.320.0753.0 |
| 76.321.0729.0<br>76.321.0753.0 | 76.321.0729.0<br>76.321.0753.0 | 76.321.0729.0<br>76.321.0753.0 | 76.321.0729.0<br>76.321.0753.0 |
| 76.322.0736.0<br>76.322.0736.1<br>76.322.0760.1 | 76.322.0736.0<br>76.322.0736.1<br>76.322.0760.1 | 76.322.0736.0<br>76.322.0736.1<br>76.322.0760.1 | 76.322.0736.0<br>76.322.0736.1<br>76.322.0760.1 |

## Accessories

| Part no. | Part no. |
|---|---|
| | |
| Cover with locking-bolts for housing and hood with locking levers<br><br>without gasket for male insert | Cover with locking-bolts for housing and hood with locking levers<br><br>with gasket for female insert |
| Plastic<br>07.417.6753.0<br>Metal<br>07.417.6729.0 | Plastic<br>07.417.6853.0<br>Metal<br>07.417.6829.0 |

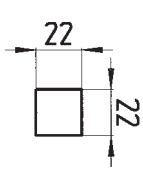


Mounting dimensions and cut-outs for open-bottom housings (shown in mm)

# revos HD

## Technical information

| | |
|---|---|
| **Approvals** | UL, CSA, MEEI, SEV |
| **Applicable standards** | IEC 61 984, DIN EN 175301-801 |
| **Contact inserts** | |
| Rated current | 10 A |
| Rated voltage | 250 V |
| Nominal voltage accord. to UL | 600 V |
| Nominal voltage accord. to CSA | 600 V |
| Pole configurations | 15, 25, 40, 64pole |
| Crimp connection | 0.2 – 1.5 $mm^2$ / 24 – 16 AWG |
| Degree of pollution | 3 |
| Temperature range | –40 to +110 °C |
| **Multipole adapter** | |
| Rated current | 10 A |
| Rated voltage | 250 V |
| Nominal voltage accord. to UL | 600 V |
| Nominal voltage accord. to CSA | 600 V |
| Pole configurations | 40, 64pole + ground |
| Screw connection | 0.5 – 4.0 $mm^2$ / 20 – 14 AWG |
| Degree of pollution | 3 |
| Temperature range | –40 to +110 °C |
| **Contacts** | |
| Material | copper alloy |
| Surface | tin-plated, gold-plated, silver-plated |
| **Hoods and housings** | |
| Material | die cast aluminum alloy<br>Thermoplast |
| Surface | silver gray, silicon-free finish |
| Locking levers | zinc-plated steel |
| Gaskets | NBR |
| Temperature range | –40 to +110 °C |
| Degree of protection accord. to DIN EN 60 529 | |
| with latched locking levers | IP 55 |
| with suitable cable gland | IP 65 |

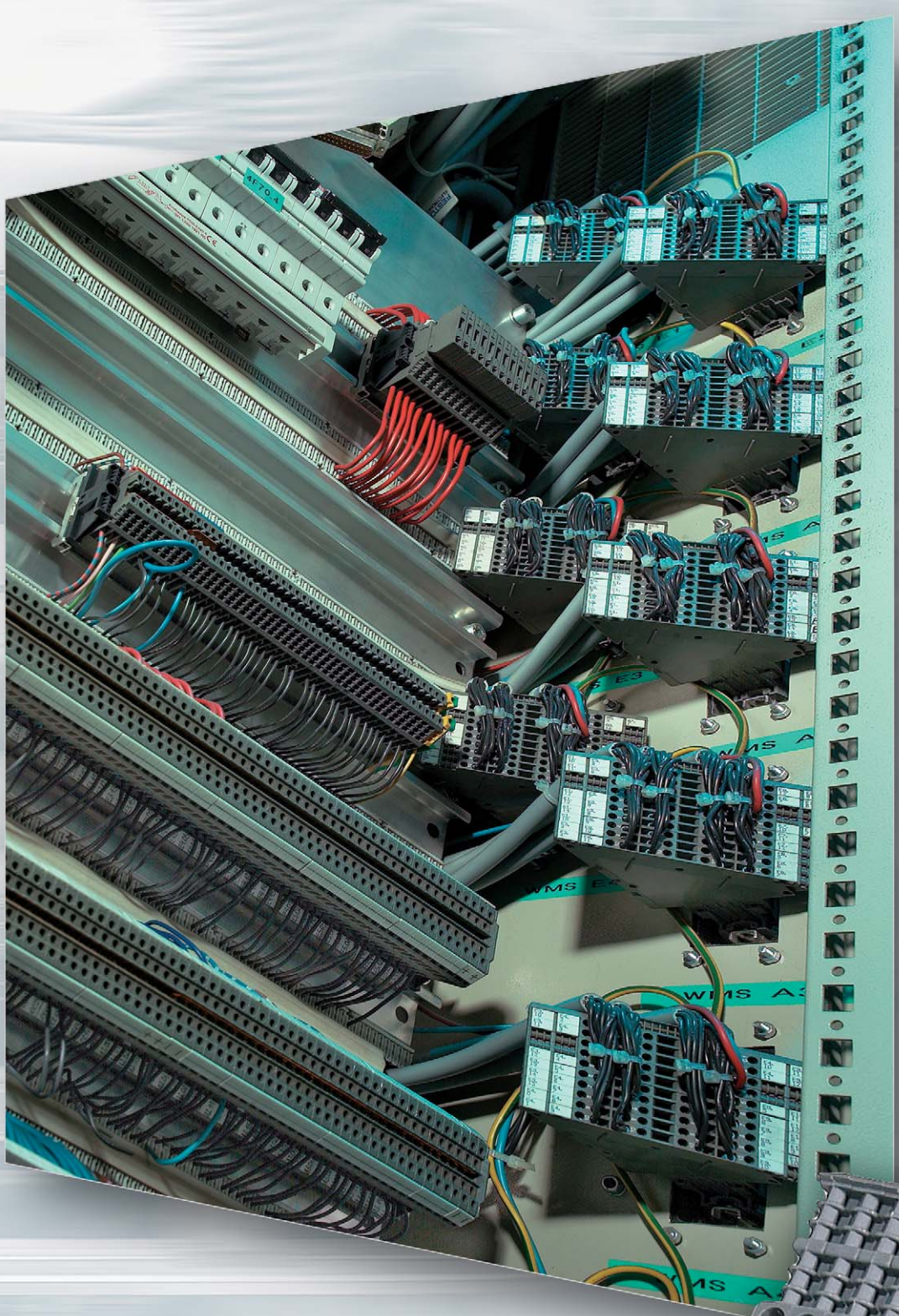

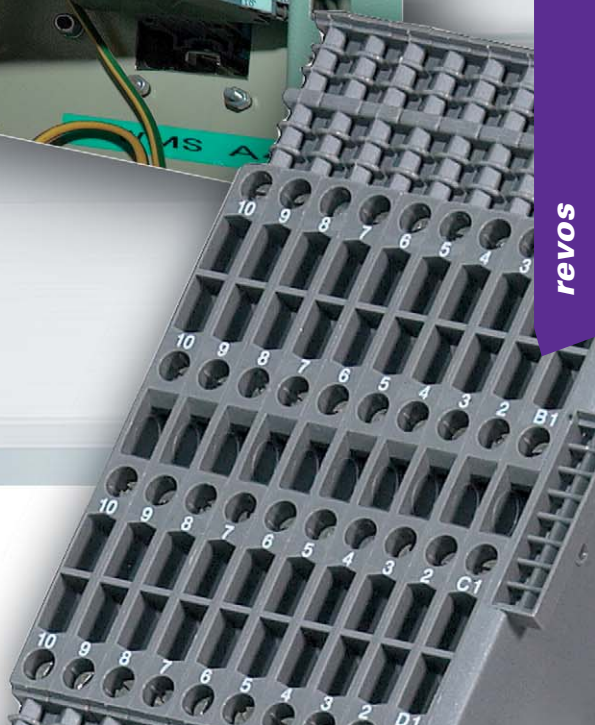


revos

# Industrial Multipole Connectors

# High density multipole connectors according to DIN EN 175301-801

# revos HD

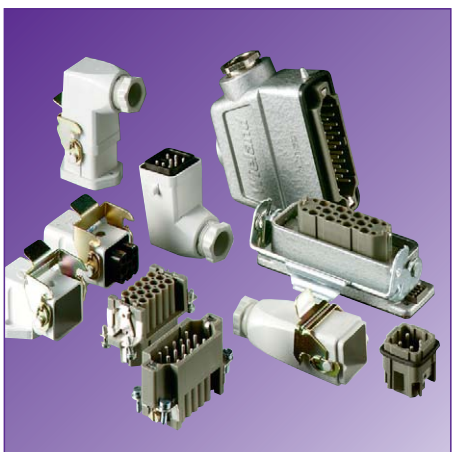

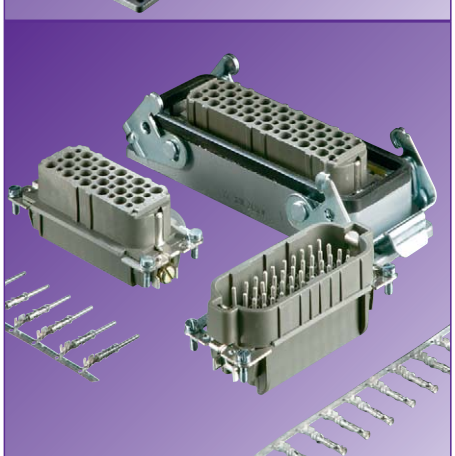

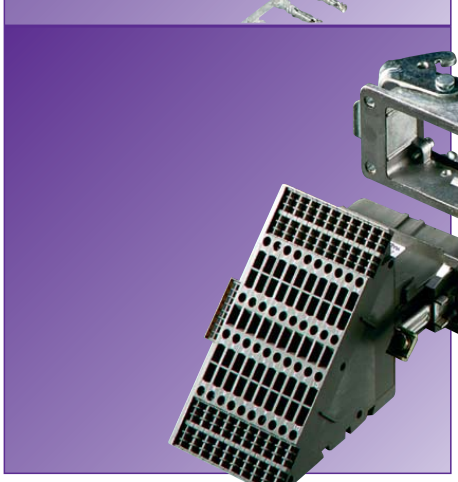

## System description

- ❒ For use in machine construction, control and switchgear building
- ❒ Reliable connector elements for power and control current lines
- ❒ Outstanding feature: a robust die cast aluminum housing
- ❒ Protection of the internal contact-inserts against mechanical and hazardous industrial influences
- ❒ According to EN 60529 and IEC 60 529, the interlocked hoods and housings provide the following degrees of protection:
  IP 65 (dust ingress and jet-water)
  IP 55 (dust deposit and splashwater)
- ❒ High contact density

## Multipole adapter

- ❒ Space-saving connection element for heavy industrial multipole connectors
- ❒ Consists of: Multipole connector, contact insert and attached feedthrough terminal
- ❒ Multipole adapters are available with female or male connector inserts
- ❒ Provided as preassembled unit which can be mounted to the control cabinet wall
- ❒ Easy handling: slide the multipole adapter to the housing and mount it with screws
- ❒ TOP connection design also available

- ❒ Clearly identified and easily accessible clamping points
- ❒ The angled connection zone and the TOP connection facility enable clamping and testing of all connections even when the components are plugged together
- ❒ Each connection can be marked with 4 or. 6 digits

Further benefits:

- ❒ Safe and time-saving wiring
- ❒ Testing is possible even when the components are plugged together, meaning that the power circuit need not be interrupted for testing
- ❒ Small-sized components helpto reduce control cabinet space
- ❒ Potential commoning due to an insulated jumper bar
- ❒ Variable marking facilities
- ❒ Coding by means of coding pieces and coding bolts
- ❒ No mismated connections

## Female and male connector inserts

- ❒ Mounted in the direction of the power flow (female insert is live)
- ❒ No mismating due to the special design of the female and male inserts
- ❒ Consecutive numbers both on the contact and on the connection sides
- ❒ Mixed contacts possible
- ❒ Due to an integrated screwdriver guide, both electric and pneumatic screwdrivers can be used

## Crimp connection

- ❒ Snap-in crimp contacts for high density applications
- ❒ Corrosion-resistant due to gas-tight connections (cold welding)
- ❒ Constant feed through resistance
- ❒ Rapid mounting
- ❒ Crimp contacts safely latch into the female and male inserts
- ❒ flared, closed cable entries protect the female contacts against possible damaging
- ❒ Connected contacts can only be released with a special tool
- ❒ Reel contacts available for automatic crimping machines

# revos

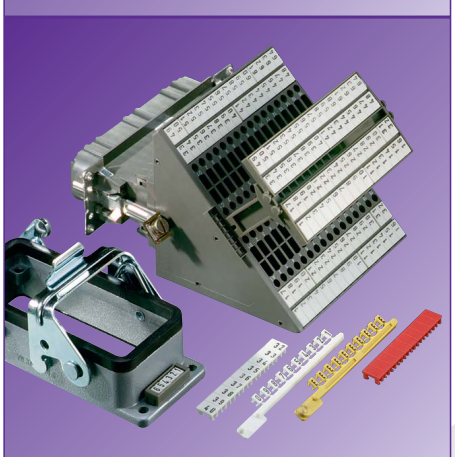

**Latching frames** (see page 674)

- ❒ Housing: contact inserts to be latched in sheet metal cut-out
- ❒ Hood: contact inserts available either with or without strain relief with/without locking mechanism
- ❒ No metal housings
- ❒ Cable to cable couplings with two hoods
- ❒ Multipole adapter with contact insert can be latched in sheet metal cut-out or mounted to a rail by means of a universal foot

❒ Technical information:

Female and male connector inserts

| | |
|---|---|
| Screw connection: | 2.5 mm² |
| | 12 AWG UL/CSA |
| Crimp connection: | 0.5 - 4 mm² |
| | 20 – 12 AWG UL/CSA |
| Number of poles: | 40, 64 |
| Rated voltage VDE: | 250 V |
| Rated voltage UL/CSA: | 600 V |
| Rated current: | 10 A |

**Crimping machine**

- ❒ Wire stripping and crimping in one step
- ❒ Manual infeed of the cable material
- ❒ Automatic stripping and crimping
- ❒ Infeed of the female and male contacts on reels (0.2 – 1.5 mm² / 24 – 16 AWG)
- ❒ The machine can be used for various applications, as the tool inserts are exchanged easily
- ❒ Available tool inserts:
  - for ST 18-connectors
  - for industrial multipole connectors
  - for high density multipole connectors
- ❒ The female and male contacts are available in cross sections between 0.2 mm² and 1.5 mm² 24 – 16 AWG
- ❒ Cross section is marked on the female and male contacts

For ordering see ***facts*** & DATA

**Crimping tool**

- ❒ Special crimping tool required for the high density Wieland contacts
- ❒ Interlock protects against inadvertant opening
- ❒ Contact positioner for female and male contacts available

For ordering see ***facts*** & DATA

**Marking accessories**

- ❒ 6digit marking tag carrier for open-bottom housings
- ❒ The connection points can be marked with single tags or via tear-off marking strips with 6 digits each

**Material**

Housing:

- ❒ Hood/housing: die cast aluminum alloy, silicon-free finish, silver gray

Female and male connector inserts:

- ❒ Insulating parts made from fiberglass reinforced Polyamide (technical information: see ***facts*** & DATA)

**DQS certificates for all product families**

- ❒ Quality standard as per DIN ISO 9001
- ❒ in Development, Production, Assembly
- ❒ Continued control of the quality standards by means of regular internal and external quality audits
- ❒ Compatible with certificates of other countries:
  - BSI Certificate, Great Britain
  - SQS Certificate, Switzerland
  - Aib-Vincotte Certificate, Belgium
  - ÖQS Certificate, Austria

**Note:**

The information regarding cross sectional area and connection types pertains to unprepared wires without ferrules.

The voltage ratings apply to the terminals in their intended application.

The official installation standards are to be followed. When the components are mounted into devices, the relevant device instructions apply.

Special installation conditions of the customers are not considered. For more detailed information on the specific component characteristics see ***facts*** & DATA.

DQS DIN EN ISO 9001
QUALITÄTSSICHERUNG
Reg.-Nr. 14 194-02

# Industrial multipole connectors
# Female/male inserts and multipole adapters

## revos HD

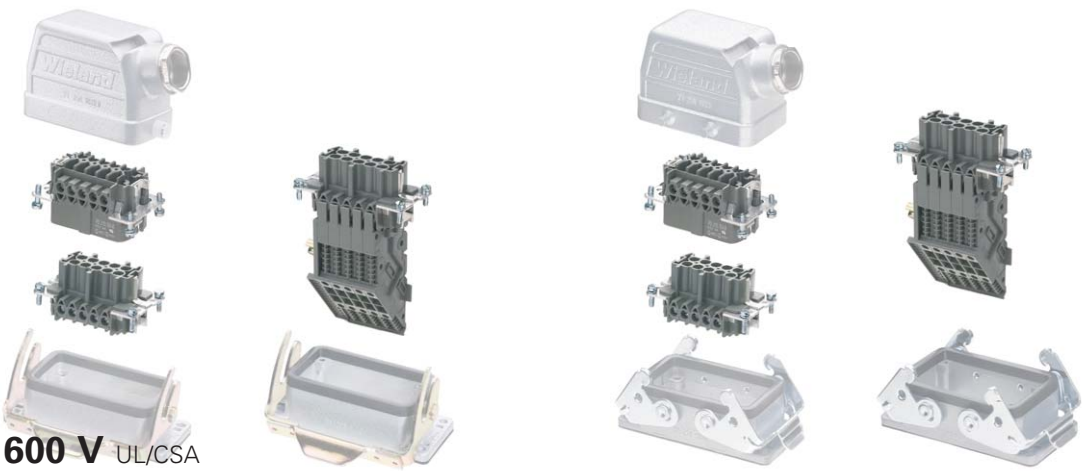

**600 V** UL/CSA

**250 V, 10 A** IEC 61 984

| | | Cross section | Approvals | Wire strip length | Material | Stand. pack |
|---|---|---|---|---|---|---|
| **Crimp connection** | Female insert<br>without crimp contacts | 0.2 – 1.5 mm²<br>24 – 16 AWG | | 4 mm | | 10 |
| | Male insert<br>without crimp contacts | 0.2 – 1.5 mm²<br>24 – 16 AWG | | 4 mm | | 10 |
| **Screw connection**<br>Multipole adapter | Female insert, ground right | 0.5 – 2.5 mm²<br>20 – 14 AWG | | 12 mm | tin-plated | 4<br>2 |
| | Female insert, ground left | 0.5 – 2.5 mm²<br>20 – 14 AWG | | 12 mm | tin-plated | 4<br>2 |
| 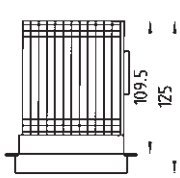  | Male insert, ground right | 0.5 – 2.5 mm²<br>20 – 14 AWG | | 12 mm | tin-plated | 4<br>2 |
| | Male insert, ground left | 0.5 – 2.5 mm²<br>20 – 14 AWG | | 12 mm | tin-plated | 4<br>2 |

# revos

## Contacts for crimp version

**Female contacts**

**Male contacts**

Crimping tool
Crimping die "E"
Contact positioner "2"
Extraction tool

| Ø mm² | AWG | Part no. | Stand. pack |
|---|---|---|---|
| 0.2 – 0.56 mm² | 24 – 20 | tin-plated | |
| Reel contacts | | 02.124.0900.0 | 5000 |
| Single contacts | | 02.124.0929.0 | 200 |
| 0.75 – 1.50 mm² | 18 – 16 | | |
| Reel contacts | | 02.124.1000.0 | 5000 |
| Single contacts | | 02.124.1029.0 | 200 |
| 0.2 – 0.56 mm² | 24 – 20 | | |
| Reel contacts | | 05.544.0900.0 | 5000 |
| Single contacts | | 05.544.0929.0 | 200 |
| 0.75 – 1.50 mm² | 18 – 16 | | |
| Reel contacts | | 05.544.1000.0 | 5000 |
| Single contacts | | 05.544.1029.0 | 200 |

| Ø mm² | AWG | Part no. | Stand. pack |
|---|---|---|---|
| 0.5 – 1.50 mm² | 20 – 16 | gold-plated | |
| Reel contacts | | 02.124.1400.0 | 5000 |
| Single contacts | | 02.124.1429.0 | 200 |
| 0.5 – 1.50 mm² | 20 – 16 | | |
| Reel contacts | | 05.544.1400.0 | 5000 |
| Single contacts | | 05.544.1429.0 | 200 |
| Crimping tool | | 95.101.0800.0 | 1 |
| Crimping die "E" | | 05.502.2400.0 | 1 |
| Contact positioner "2" | | 05.502.3200.0 | 1 |
| Extraction tool | | 05.502.0000.0 | 1 |

| 15pole + ground | 25pole + ground | 40pole + ground | 64pole + ground |
|---|---|---|---|
| Part no. | Part no. | Part no. | Part no. |
| 73.700.1553.0 | 73.700.2553.0 | 73.700.4058.0 | 73.700.6458.0 |
| 73.710.1553.0 | 73.710.2553.0 | 73.710.4058.0 | 73.710.6458.0 |
| | | | |
| | | 73.105.4053.0 | 73.105.6453.0 |
| | | 73.100.4053.0 | 73.100.6453.0 |
| | | 73.115.4053.0 | 73.115.6453.0 |
| | | 73.110.4053.0 | 73.110.6453.0 |
| | | | |

**40pole multipole adapter**

a) = operating current
b) = maximum operating current
c) = ambient temperature
d) = conductor cross section
e) = number of loaded contacts

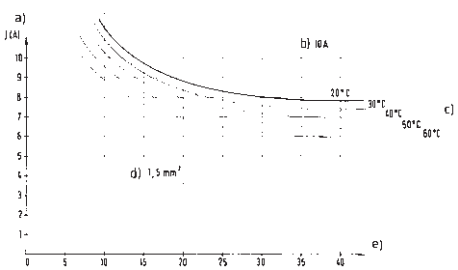


**64pole multipole adapter**

a) = operating current
b) = maximum operating current
c) = ambient temperature
d) = conductor cross section
e) = number of loaded contacts

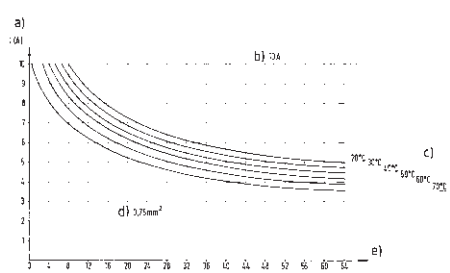


revos

# Industrial multipole connectors
# Hoods with single locking levers

## revos HD

**Version A**

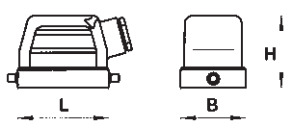


**Version C**

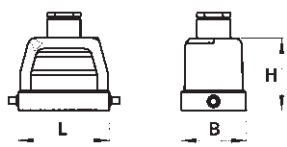


For inserts **600 V** UL/CSA

For inserts **250 V** IEC 61 984

DIN EN 175301-801
**Degrees of protection: IP 55**
**IP 65** with the appropriate cable glands

| Number of poles | Thread | Cable gland type | Dimensions in mm | L | W | H | Stand. pack |
|---|---|---|---|---|---|---|---|
| Size**15**<br>for multipole connectors<br>**15pole + ground** | M 20 | 0 with cable gland<br>1 with threaded collar<br>2 with intermediate support | | 63 | 33 | 64 | 1 |
| | M 25 | 0 with cable gland<br>1 with threaded collar<br>2 with intermediate support | | 63 | 33 | 64 | 1 |
| Size **25**<br>for multipole connectors<br>**25pole + ground** | M 20 | 0 with cable gland<br>1 with threaded collar<br>2 with intermediate support | | 79.5 | 33 | 70 | 1 |
| | M 25 | 0 with cable gland<br>1 with threaded collar<br>2 with intermediate support | | 79.5 | 33 | 70 | 1 |
| Size **16**<br>for multipole connectors<br>**40pole + ground** | M 25 | 0 with cable gland<br>1 with threaded collar<br>2 with intermediate support<br>3 with strain relief | | 93.5 | 43 | 76 | 1 |
| | M 32 | 0 with cable gland<br>1 with threaded collar<br>2 with intermediate support<br>3 with strain relief | | 93.5 | 43 | 76 | 1 |
| Size **24**<br>for multipole connectors<br>**64pole + ground** | M 25 | 0 with cable gland<br>1 with threaded collar<br>2 with intermediate support<br>3 with strain relief | | 120 | 43 | 76 | 1 |
| | M 32 | 0 with cable gland<br>1 with threaded collar<br>2 with intermediate support<br>3 with strain relief | | 120 | 43 | 76 | 1 |

# revos

| Hood with cable gland<br><br>Version A<br><br> | Hood with cable gland<br><br>Version C<br><br> |
|---|---|
| Part no. | Part no. |
| 76.350.1535.0<br><br>76.350.1535.2 | 76.352.1535.0<br>76.352.1535.1<br>76.352.1535.2 |
| 76.353.1535.0<br><br>76.353.1535.2 | 76.354.1535.0<br>76.354.1535.1<br>76.354.1535.2 |
| 76.350.2535.0<br><br>76.350.2535.2 | 76.352.2535.0<br>76.352.2535.1<br>76.352.2535.2 |
| 76.353.2535.0<br><br>76.353.2535.2 | 76.354.2535.0<br>76.354.2535.1<br>76.354.2535.2 |
| 76.350.4035.0<br>76.350.4035.1<br>76.350.4035.2<br>76.350.4035.3 | 76.352.4035.0<br>76.352.4035.1<br>76.352.4035.2<br>76.352.4035.3 |
| 76.353.4035.0<br>76.353.4035.1<br>76.353.4035.2<br>76.353.4035.3 | 76.354.4035.0<br>76.354.4035.1<br>76.354.4035.2<br>76.354.4035.3 |
| 76.350.6435.0<br>76.350.6435.1<br>76.350.6435.2<br>76.350.6435.3 | 76.352.6435.0<br>76.352.6435.1<br>76.352.6435.2<br>76.352.6435.3 |
| 76.353.6435.0<br>76.353.6435.1<br>76.353.6435.2<br>76.353.6435.3 | 76.354.6435.0<br>76.354.6435.1<br>76.354.6435.2<br>76.354.6435.3 |
| | |

# Industrial multipole connectors
# Housings with single locking levers, without protective cover

## revos HD

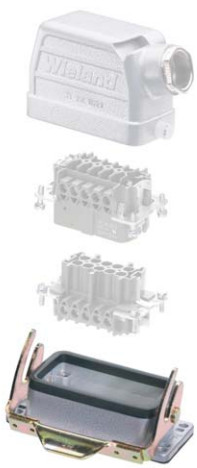

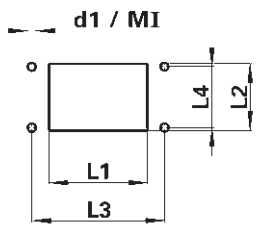


Mounting dimensions and cut-outs for open-bottom housings

| Housing size | Cut-out (mm) | | Mounting dimensions (mm) | | d1 (mm) | MI |
|---|---|---|---|---|---|---|
| | L1 | L2 | L3 | L4 | | |
| **15** | 56 | 23 | 70 | 17.5 | 3.3 | M 3 |
| **25** | 72 | 23 | 86 | 17.5 | 4.3 | M 4 |
| **16** | 83.5 | 35 | 103 | 32 | 4.3 | M 4 |
| **24** | 112 | 35 | 130 | 32 | 4.3 | M 4 |

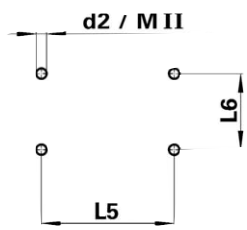


Mounting dimensions for closed-bottom housings

| Housing size | L5 (mm) | L6 (mm) | d2 (mm) | MII |
|---|---|---|---|---|
| **15** | 48 | 40 | 4.3 | M 4 |
| **25** | 64 | 40 | 5.5 | M 5 |
| **16** | 105 | 45 | 5.5 | M 5 |
| **24** | 132 | 45 | 5.5 | M 5 |

For inserts **600 V** UL/CSA

For inserts **250 V** IEC 61 984

DIN EN 175301-801
**Degrees of protection: IP 55**
**IP 65** with the appropriate cable glands

| Number of poles | Thread | Cable gland type | Dimensions in mm | L | W | H | Stand. pack |
|---|---|---|---|---|---|---|---|
| Size**15** for multipole connectors | M 20 | 0 with cable gland | | 81 | 30 | 25.7 | 1 |
| | | 1 with threaded collar | | 81 | 50 | 52.5 | 1 |
| **15pole + ground** | | | | 81 | 50 | 52.5 | 1 |
| | M 25 | 0 with cable gland | | 81 | 50 | 52.5 | 1 |
| | | 1 with threaded collar | | 81 | 50 | 52.5 | 1 |
| Size **25** for multipole connectors | M 20 | 0 with cable gland | | 96 | 30 | 25.7 | 1 |
| | | 1 with threaded collar | | 95.7 | 50 | 57.5 | 1 |
| **25pole + ground** | | | | 95.7 | 50 | 57.5 | 1 |
| | M 25 | 0 with cable gland | | 95.7 | 50 | 57.5 | 1 |
| | | 1 with threaded collar | | 95.7 | 50 | 57.5 | 1 |
| Size **16** for multipole connectors | M 25 | 0 with cable gland | | 113 | 43 | 28 | 1 |
| | | 1 with threaded collar | | 117 | 52 | 76.5 | 1 |
| **40pole + ground** | | | | 117 | 52 | 76.5 | 1 |
| | M 32 | 0 with cable gland | | 117 | 52 | 76.5 | 1 |
| | | 1 with threaded collar | | 117 | 52 | 76.5 | 1 |
| Size **24** for multipole connectors | M 25 | 0 with cable gland | | 140 | 43 | 28 | 1 |
| | | 1 with threaded collar | | 144 | 52 | 76.5 | 1 |
| **64pole + ground** | | | | 144 | 52 | 76.5 | 1 |
| | M 32 | 0 with cable gland | | 144 | 52 | 76.5 | 1 |
| | | 1 with threaded collar | | 144 | 52 | 76.5 | 1 |

# revos

**Version a**

**Version b**

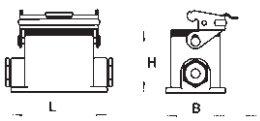


**Version c**

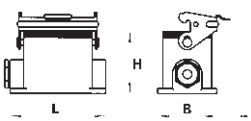


**Version d**

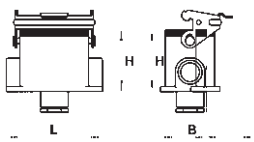


| Open-bottom housing<br><br>Version a<br><br> | Closed-bottom housing with two narrow-side entry cable glands<br><br>Version b<br><br> | Closed bottom housing with one narrow-side entry cable gland on the left<br><br>Version c<br><br> | Closed-bottom housing with bottom entry cable gland<br><br>Version d<br><br> | Open-bottom housing with locking ridges for multipole adapters<br><br>Version a<br><br> | |
|---|---|---|---|---|---|
| Part no. | Part no. | Part no. | Part no. | Part no. | |
| 76.320.1528.0 | 76.330.1535.0<br>76.330.1535.1 | 76.331.1535.0<br>76.331.1535.1 | | | |
| | 76.334.1535.0<br>76.334.1535.1 | 76.335.1535.0<br>76.335.1535.1 | | | |
| 76.320.2528.0 | 76.330.2535.0<br>76.330.2535.1 | 76.331.2535.0<br>76.331.2535.1 | | | |
| | 76.334.2535.0<br>76.334.2535.1 | 76.335.2535.0<br>76.335.2535.1 | | | |
| 71.320.1628.0 | 76.330.4035.0<br>76.330.4035.1 | 76.331.4035.0<br>76.331.4035.1 | 76.333.4035.0<br>76.333.4035.1 | 76.326.4028.0 | |
| | 76.334.4035.0<br>76.334.4035.1 | 76.335.4035.0<br>76.335.4035.1 | 76.337.4035.0<br>76.337.4035.1 | | |
| 71.320.2428.0 | 76.330.6435.0<br>76.330.6435.1 | 76.331.6435.0<br>76.331.6435.1 | 76.333.6435.0<br>76.333.6435.1 | 76.326.6428.0 | |
| | 76.334.6435.0<br>76.334.6435.1 | 76.335.6435.0<br>76.335.6435.1 | 76.337.6435.0<br>76.337.6435.1 | | |

# Industrial multipole connectors
# Housings with single locking levers and protective cover

## revos HD

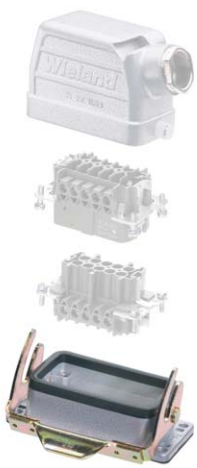

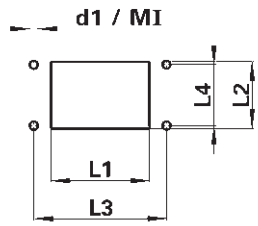


Mounting dimensions and cut-outs for open-bottom housings

| Housing size | Cut-out (mm) | | Mounting dimensions (mm) | | d1 (mm) | MI |
|---|---|---|---|---|---|---|
| | L1 | L2 | L3 | L4 | | |
| **15** | 56 | 23 | 70 | 17.5 | 3.3 | M 3 |
| **25** | 72 | 23 | 86 | 17.5 | 4.3 | M 4 |
| **16** | 83.5 | 35 | 103 | 32 | 4.3 | M 4 |
| **24** | 112 | 35 | 130 | 32 | 4.3 | M 4 |

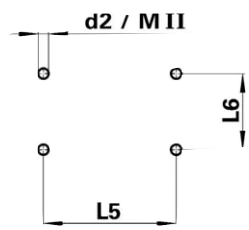


Mounting dimensions for closed-bottom housings

| Housing size | L5 (mm) | L6 (mm) | d2 (mm) | MII |
|---|---|---|---|---|
| **15** | 48 | 40 | 4.3 | M 4 |
| **25** | 64 | 40 | 5.5 | M 5 |
| **16** | 105 | 45 | 5.5 | M 5 |
| **24** | 132 | 45 | 5.5 | M 5 |

For inserts **600 V** UL/CSA

For inserts **250 V** IEC 61 984

DIN EN 175301-801
**Degrees of protection: IP 55**
**IP 65** with the appropriate cable glands

| Number of poles | Thread | Cable gland type | Dimensions in mm | L | W | H | Stand. pack |
|---|---|---|---|---|---|---|---|
| Size**15** for multipole connectors | | | | 81 | 30 | 25.7 | 1 |
| **15pole + ground** | | | | | | | |
| Size **25** for multipole connectors | | | | 96 | 30 | 25.7 | 1 |
| **25pole + ground** | | | | | | | |
| Size **16** for multipole connectors | M 25 | 0 with cable gland<br>1 with threaded collar | | 113<br>117<br>117 | 43<br>52<br>52 | 28<br>76.5<br>76.5 | 1<br>1<br>1 |
| **40pole + ground** | M 32 | 0 with cable gland<br>1 with threaded collar | | 117<br>117 | 52<br>52 | 76.5<br>76.5 | 1<br>1 |
| Size **24** for multipole connectors | M 25 | 0 with cable gland<br>1 with threaded collar | | 140<br>144<br>144 | 43<br>52<br>52 | 28<br>76.5<br>76.5 | 1<br>1<br>1 |
| **64pole + ground** | M 32 | 0 with cable gland<br>1 with threaded collar | | 144<br>144 | 52<br>52 | 76.5<br>76.5 | 1<br>1 |

# revos

**Version e** **Version f** **Version g** **Version h** **Version i**

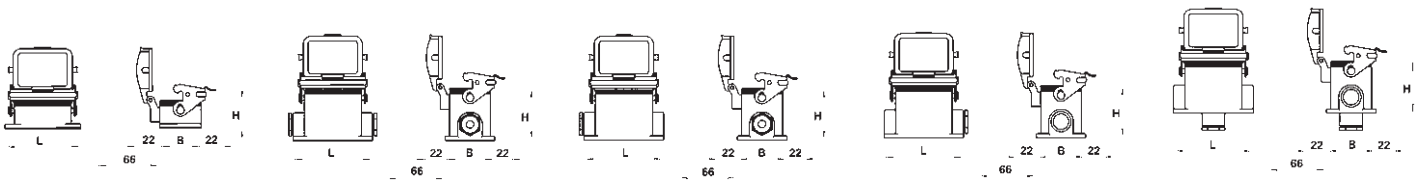


| Open-bottom housing with protective cover for female and male inserts only<br><br>Version e | Closed-bottom housing with two narrow-side entry cable glands and protective cover<br><br>Version f | Closed bottom housing with one narrow-side entry cable gland on the left and protective cover<br><br>Version g | Closed bottom housing with one narrow-side entry cable gland on the right and protective cover<br><br>Version h | Closed bottom housing with one bottom entry cable gland and protective cover<br><br>Version i | Open-bottom housing with protective cover and locking ridges for multipole adapters<br><br>Version e |
|---|---|---|---|---|---|
| | | | | | |
| Part no. | Part no. | Part no. | Part no. | Part no. | Part no. |
| 76.325.1528.0 | | | | | |
| | | | | | |
| 76.325.2528.0 | | | | | |
| | | | | | |
| 71.325.1628.0 | 76.340.4035.0<br>76.340.4035.1 | 76.341.4035.0<br>76.341.4035.1 | 76.342.4035.0<br>76.342.4035.1 | 76.343.4035.0<br>76.343.4035.1 | 76.327.4028.0 |
| | 76.344.4035.0<br>76.344.4035.1 | 76.345.4035.0<br>76.345.4035.1 | 76.346.4035.0<br>76.346.4035.1 | 76.347.4035.0<br>76.347.4035.1 | |
| 71.325.2428.0 | 76.340.6435.0<br>76.340.6435.1 | 76.341.6435.0<br>76.341.6435.1 | 76.342.6435.0<br>76.342.6435.1 | 76.343.6435.0<br>76.343.6435.1 | 76.327.6428.0 |
| | 76.344.6435.0<br>76.344.6435.1 | 76.345.6435.0<br>76.345.6435.1 | 76.346.6435.0<br>76.346.6435.1 | 76.347.6435.0<br>76.347.6435.1 | |

# Industrial multipole connectors
# Hoods with double locking levers,
# revos HD

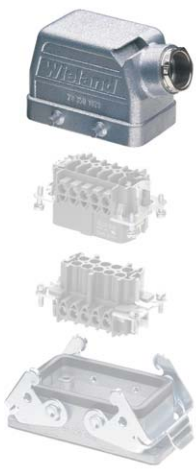

For inserts **600 V** UL/CSA

For inserts **250 V** IEC 61 984

DIN EN 175301-801
**Degrees of protection: IP 55**
**IP 65** with the appropriate cable glands

| Number of poles | Thread | Cable gland type | Dimensions in mm | L | W | H | Stand. pack |
|---|---|---|---|---|---|---|---|
| Size**16**<br>for multipole connectors<br><br>**40pole + ground** | M 25 | 0 with cable gland | | 93.5 | 43 | 76 | 1 |
| | | 1 with thread | | 93.5 | 43 | 76 | 1 |
| | | 2 with intermediate support | | 93.5 | 43 | 76 | 1 |
| | | 3 with strain relief | | 93.5 | 43 | 76 | 1 |
| | M 32 | 0 with cable gland | | 93.5 | 43 | 76 | 1 |
| | | 1 with threaded collar | | 93.5 | 43 | 76 | 1 |
| | | 2 with intermediate support | | 93.5 | 43 | 76 | 1 |
| | | 3 with strain relief | | 93.5 | 43 | 76 | 1 |
| Size **24**<br>for multipole connectors<br><br>**64pole + ground** | M 25 | 0 with cable gland | | 120 | 43 | 76 | 1 |
| | | 1 with threaded collar | | 120 | 43 | 76 | 1 |
| | | 2 with intermediate support | | 120 | 43 | 76 | 1 |
| | | 3 with strain relief | | 120 | 43 | 76 | 1 |
| | M 32 | 0 with cable gland | | 120 | 43 | 76 | 1 |
| | | 1 with threaded collar | | 120 | 43 | 76 | 1 |
| | | 2 with intermediate support | | 120 | 43 | 76 | 1 |
| | | 3 with strain relief | | 120 | 43 | 76 | 1 |

# revos

**Version A**

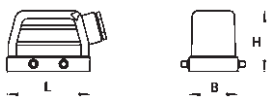


**Version C**

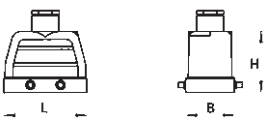


**Version D**

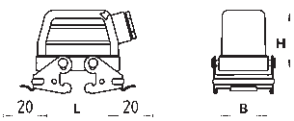


**Version F**

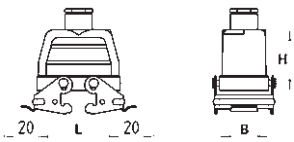


| Hood with cable gland<br><br>Version A<br><br> | Hood with cable gland<br><br>Version C<br><br> | Hood with cable gland<br><br>Version D<br><br> | Hood with cable gland<br><br>Version F<br><br> |
|---|---|---|---|
| Part no. | Part no. | Part no. | Part no. |
| 73.350.4035.0<br>73.350.4035.1<br>73.350.4035.2<br>73.350.4035.3 | 73.352.4035.0<br>73.352.4035.1<br>73.352.4035.2<br>73.352.4035.3 | 73.355.4035.0<br>73.355.4035.1<br>73.355.4035.2<br>73.355.4035.3 | 73.357.4035.0<br>73.357.4035.1<br>73.357.4035.2<br>73.357.4035.3 |
| 73.353.4035.0<br>73.353.4035.1<br>73.353.4035.2<br>73.353.4035.3 | 73.354.4035.0<br>73.354.4035.1<br>73.354.4035.2<br>73.354.4035.3 | 73.358.4035.0<br>73.358.4035.1<br>73.358.4035.2<br>73.358.4035.3 | 73.359.4035.0<br>73.359.4035.1<br>73.359.4035.2<br>73.359.4035.3 |
| 73.350.6435.0<br>73.350.6435.1<br>73.350.6435.2<br>73.350.6435.3 | 73.352.6435.0<br>73.352.6435.1<br>73.352.6435.2<br>73.352.6435.3 | 73.355.6435.0<br>73.355.6435.1<br>73.355.6435.2<br>73.355.6435.3 | 73.357.6435.0<br>73.357.6435.1<br>73.357.6435.2<br>73.357.6435.3 |
| 73.353.6435.0<br>73.353.6435.1<br>73.353.6435.2<br>73.353.6435.3 | 73.354.6435.0<br>73.354.6435.1<br>73.354.6435.2<br>73.354.6435.3 | 73.358.6435.0<br>73.358.6435.1<br>73.358.6435.2<br>73.358.6435.3 | 73.359.6435.0<br>73.359.6435.1<br>73.359.6435.2 |

# Industrial multipole connectors
# Housings with double locking levers, without protective cover

## revos HD

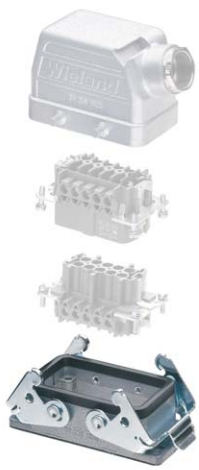

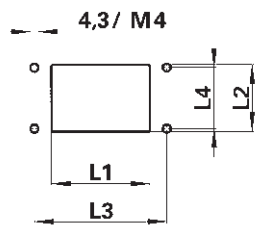


Mounting dimensions and cut-outs for open-bottom housings

| Housing size | Cut-out (mm) | | Mounting dimensions (mm) | |
|---|---|---|---|---|
| | L1 | L2 | L3 | L4 |
| **16** | 83.5 | 103 | 32 | 35 |
| **24** | 112 | 130 | 32 | 35 |

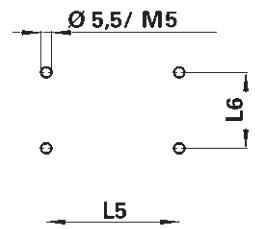


Mounting dimensions for closed-bottom housings

| Housing size | L5 (mm) | L6 (mm) |
|---|---|---|
| **16** | 105 | 45 |
| **24** | 132 | 45 |

For inserts **600 V** UL/CSA

For inserts **250 V** IEC 61 984

DIN EN 175301-801
**Degrees of protection: IP 55**
**IP 65** with the appropriate cable glands

| Number of poles | Thread | Cable gland type | Dimensions in mm | L | W | H | Stand. pack |
|---|---|---|---|---|---|---|---|
| Size**16** for multipole connectors | M 25 | 0 with cable gland | | 113 | 43 | 28 | 1 |
| | | 1 with threaded collar | | 117 | 52 | 76.5 | 1 |
| | | | | 117 | 52 | 76.5 | 1 |
| **40pole + ground** | M 32 | 0 with cable gland | | 117 | 52 | 76.5 | 1 |
| | | 1 with threaded collar | | 117 | 52 | 76.5 | 1 |
| Size **24** for multipole connectors | M 25 | 0 with cable gland | | 140 | 43 | 28 | 1 |
| | | 1 with threaded collar | | 144 | 52 | 76.5 | 1 |
| | | | | 144 | 52 | 76.5 | 1 |
| **64pole + ground** | M 32 | 0 with cable gland | | 144 | 52 | 76.5 | 1 |
| | | 1 with threaded collar | | 144 | 52 | 76.5 | 1 |

# revos

**Version a**

**Version b**

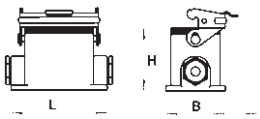


**Version c**

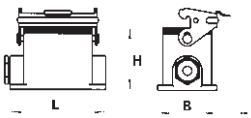


**Version d**

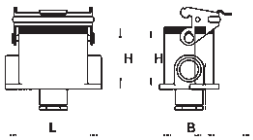


| Open-bottom housing<br><br>Version a | Closed-bottom housing with two narrow-side entry cable glands<br><br>Version b | Closed bottom housing with one narrow-side entry cable gland on the left<br><br>Version c | Closed-bottom housing with bottom entry cable gland<br><br>Version d | Open-bottom housing with locking ridges for multipole adapters<br><br>Version a | |
|---|---|---|---|---|---|
| | | | | | |
| Part no. | Part no. | Part no. | Part no. | Part no. | |
| 70.320.1628.0 | 73.330.4035.0<br>73.330.4035.1 | 73.331.4035.0<br>73.331.4035.1 | 73.333.4035.0<br>73.333.4035.1 | 73.326.4028.0 | |
| | 73.334.4035.0<br>73.334.4035.1 | 73.335.4035.0<br>73.335.4035.1 | 73.337.4035.0<br>73.337.4035.1 | | |
| 70.320.2428.0 | 73.330.6435.0<br>73.330.6435.1 | 73.331.6435.0<br>73.331.6435.1 | 73.333.6435.0<br>73.333.6435.1 | 73.326.6428.0 | |
| | 73.334.6435.0<br>73.334.6435.1 | 73.335.6435.0<br>73.335.6435.1 | 73.337.6435.0<br>73.337.6435.1 | | |

# Industrial multipole connectors
# Hoods with double locking levers with protective cover

## revos HD

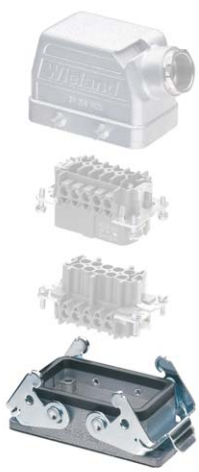

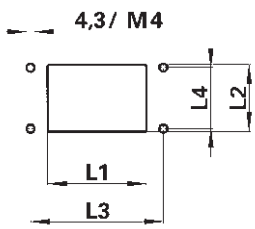


Mounting dimensions and cut-outs for open-bottom housings

| Housing size | Cut-out (mm) | | Mounting dimensions (mm) | |
|---|---|---|---|---|
| | L1 | L2 | L3 | L4 |
| **16** | 83.5 | 103 | 32 | 35 |
| **24** | 112 | 130 | 32 | 35 |

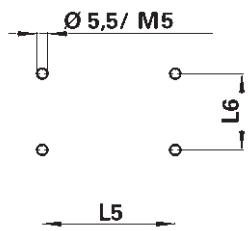


Mounting dimensions for closed-bottom housings

| Housing size | L5 (mm) | L6 (mm) |
|---|---|---|
| **16** | 105 | 45 |
| **24** | 132 | 45 |

For inserts **600 V** UL/CSA

For inserts **250 V** IEC 61 984

DIN EN 175301-801
**Degrees of protection: IP 55**
**IP 65** with the appropriate cable glands

| Number of poles | Thread | Cable gland type | Dimensions in mm | L | W | H | Stand. pack |
|---|---|---|---|---|---|---|---|
| Size**16** for multipole connectors | M 25 | 0 with cable gland | | 113 | 43 | 28 | 1 |
| | | 1 with threaded collar | | 117 | 52 | 76.5 | 1 |
| | | | | 117 | 52 | 76.5 | 1 |
| **40pole + ground** | M 32 | 0 with cable gland | | 117 | 52 | 76.5 | 1 |
| | | 1 with threaded collar | | 117 | 52 | 76.5 | 1 |
| Size **24** for multipole connectors | M 25 | 0 with cable gland | | 140 | 43 | 28 | 1 |
| | | 1 with threaded collar | | 144 | 52 | 76.5 | 1 |
| | | | | 144 | 52 | 76.5 | 1 |
| **64pole + ground** | M 32 | 0 with cable gland | | 144 | 52 | 76.5 | 1 |
| | | 1 with threaded collar | | 144 | 52 | 76.5 | 1 |

# revos

| Version e | Version f | Version g | Version h | Version i |
|---|---|---|---|---|
| 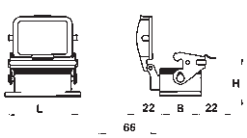 | 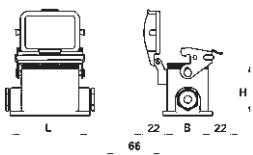 | 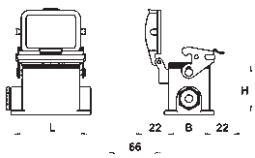 | 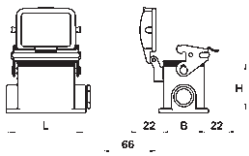 | 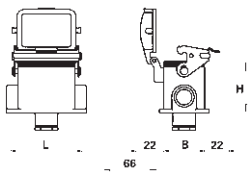 |
| Open-bottom housing with protective cover for female and male inserts only<br><br>Version e | Closed-bottom housing with two narrow-side entry cable glands and protective cover<br><br>Version f | Closed bottom housing with one narrow-side entry cable gland on the left and protective cover<br><br>Version g | Closed bottom housing with one narrow-side entry cable gland on the right and protective cover<br><br>Version h | Closed bottom housing with one bottom entry cable gland and protective cover<br><br>Version i | Open-bottom housing with protective cover and locking ridges for multipole adapters<br><br>Version e |
| | | | | | |
| Part no. | Part no. | Part no. | Part no. | Part no. | Part no. |
| 70.325.1628.0 | 73.340.4035.0<br>73.340.4035.1 | 73.341.4035.0<br>73.341.4035.1 | 73.342.4035.0<br>73.342.4035.1 | 73.343.4035.0<br>73.343.4035.1 | 73.327.4028.0 |
| | 73.344.4035.0<br>73.344.4035.1 | 73.345.4035.0<br>73.345.4035.1 | 73.346.4035.0<br>73.346.4035.1 | 73.347.4035.0<br>73.347.4035.1 | |
| 70.325.2428.0 | 73.340.6435.0<br>73.340.6435.1 | 73.341.6435.0<br>73.341.6435.1 | 73.342.6435.0<br>73.342.6435.1 | 73.343.6435.0<br>73.343.6435.1 | 73.327.6428.0 |
| | 73.344.6435.0<br>73.344.6435.1 | 73.345.6435.0<br>73.345.6435.1 | 73.346.6435.0<br>73.346.6435.1 | 73.347.6435.0<br>73.347.6435.1 | |

# Industrial multipole connector
# for cable to cable couplings with double locking lever

revos

All hoods and housings can be supplied with an intermediate support and without metric cable glands. For this case please change the part number by adding a 2 in the end (e.g. 72.352.1035.2). If you want to order hoods or housings with metric thread only, please indicate a 1 at the end of the part number (e.g. 72.352.1035.1).

**Other than shown in the figure, the 6pole and 48pole connectors in version 70.3, and the 20, 26 and 32pole connectors in version 70.4 only have one locking lever on the broad side!**

For accessories and marking material for hoods and open-bottom housings please see the section Accessories for industrial multipole connectors

**Degree of protection: IP 55 accord. to DIN EN 60 529**
**Degree of protection: IP 65 accord. to DIN EN 60 529** with appropriate cable glands

## Rated current accord. to IEC 61 984

| Type | Used cont. | Switch. cont. | ground | Cable entry | U | UL/CSA | I | Cross section | | Stand. pack | Female insert with screw connection<br> <br>Part no. | Male insert with screw connection<br> <br>Part no. |
|---|---|---|---|---|---|---|---|---|---|---|---|---|
| 70.3 | 6 | – | 1 | M 20 | 500 V | 600 V | 16 A | 2.5 mm² | 12 AWG | 10 | 70.300.0640.0 | 70.310.0640.0 |
| 70.4 | 3 | 2 | 1 | M 20 | 690/400 V | 600 V | 16 A | 2.5 mm² | 12 AWG | 10 | 70.400.0340.0 | 70.410.0340.0 |
| 70.4 | 6 | 2 | 1 | M 25 | 690/400 V | 600 V | 16 A | 2.5 mm² | 12 AWG | 10 | 70.400.0640.0 | 70.410.0640.0 |
| 70.2 | 6 | – | 1 | M 25 | 400 V | 600 V | 35 A | 6.0 mm² | 8 AWG | 10 | 70.200.0653.0 | 70.210.0653.0 |
| 70.3 | 10 | – | 1 | M 20 | 500 V | 600 V | 16 A | 2.5 mm² | 12 AWG | 10 | 70.300.1040.0 | 70.310.1040.0 |
| 70.4 | 10 | 2 | 1 | M 25 | 690/400 V | 600 V | 16 A | 2.5 mm² | 12 AWG | 10 | 70.400.1040.0 | 70.410.1040.0 |
| 70.3 | 16 | – | 1 | M 32 | 500 V | 600 V | 16 A | 2.5 mm² | 12 AWG | 10 | 70.300.1640.0 | 70.310.1640.0 |
| 70.4 | 16 | 2 | 1 | M 32 | 690/400 V | 600 V | 16 A | 2.5 mm² | 12 AWG | 10 | 70.400.1640.0 | 70.410.1640.0 |
| 70.4 | 20 | 2 | 1 | M 32 | 690/400 V | 600 V | 16 A | 2.5 mm² | 12 AWG | 5 | 70.400.2040.0 | 70.410.2040.0 |
| 70.3 | 24 | – | 1 | M 32 | 500 V | 600 V | 16 A | 2.5 mm² | 12 AWG | 10 | 70.300.2440.0 | 70.310.2440.0 |
| 70.4 | 26 | 2 | 1 | M 32 | 690/400 V | 600 V | 16 A | 2.5 mm² | 12 AWG | 5 | 70.400.2640.0 | 70.410.2640.0 |
| 70.4 | 32 | 2 | 1 | M 32 | 690/400 V | 600 V | 16 A | 2.5 mm² | 12 AWG | 5 | 70.400.3240.0 | 70.410.3240.0 |
| 70.3 | 48 | – | 1 | M 32 | 500 V | 600 V | 16 A | 2.5 mm² | 12 AWG | 5 | 70.300.4840.0 | 70.310.4840.0 |

# revos

| | Hood with cable gland | Hood with cable gland with locking levers and gasket | Hood with strain relief | Hood with strain relief with locking levers and gasket |
|---|---|---|---|---|
| | | | | |
| Std. pack | Part no. | Part no. | Part no. | Part no. |
| 1 | 70.352.0635.0 | 70.372.0635.0 | 70.352.0635.3 | 70.372.0635.3 |
| 1 | 72.352.1035.0 | 72.372.1035.0 | 72.352.1035.3 | 72.372.1035.3 |
| 1 | 72.352.1635.0 | 72.372.1635.0 | 72.352.1635.3 | 72.372.1635.3 |
| 1 | 70.352.1635.0 | 70.372.1635.0 | 70.352.1635.3 | 70.372.1635.3 |
| 1 | 70.352.1035.0 | 70.372.1035.0 | 70.352.1035.3 | 70.372.1035.3 |
| 1 | 72.352.2435.0 | 72.372.2435.0 | 72.352.2435.3 | 72.372.2435.3 |
| 1 | 70.354.1635.0 | 70.374.1635.0 | 70.354.1635.3 | 70.374.1635.3 |
| 1 | 72.354.2435.0 | 72.374.2435.0 | 72.354.2435.3 | 72.374.2435.3 |
| 1 | | | 70.375.4835.3 | 70.372.4835.3 |
| 1 | 70.354.2435.0 | 70.374.2435.0 | 70.354.2435.3 | 70.374.2435.3 |
| 1 | | | 70.375.4835.3 | 70.372.4835.3 |
| 1 | | | 70.375.4835.3 | 70.372.4835.3 |
| 1 | | | 70.375.4835.3 | 70.372.4835.3 |

**Examples:**

10pole connection

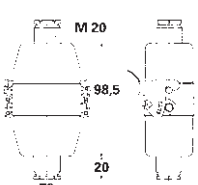


10pole connection

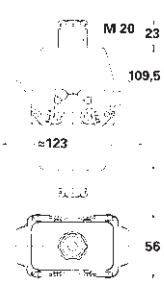


16pole connection

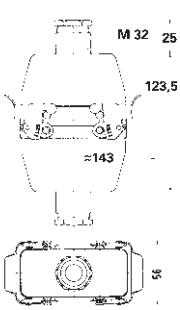


24pole connection

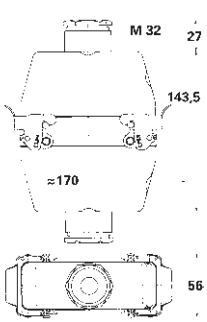


48pole connection

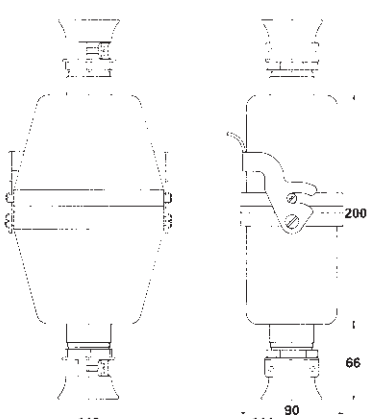

# Industrial multipole connector
# for cable to cable couplings with single locking lever

revos

All hoods and housings can be supplied with an intermediate support and without metric cable glands. For this case please change the part number by adding a 2 in the end (e.g. 72.352.1035.2). If you want to order hoods or housings with metric cable gland only, please indicate a 1 at the end of the part number (e.g. 72.352.1035.1).

For accessories and marking material for hoods and open-bottom housings please see the section Accessories for industrial multipole connectors

**Degree of protection: IP 55 accord.to DIN EN 60 529**
**Degree of protection: IP 65**
**accord. to DIN EN 60 529** with appropriate cable glands

## Rated current accord. to IEC 61 984

| Type | Used cont. | Switch. cont. | Ground | Cable entry | U | UL/CSA | I | Cross section | Stand. pack | Female insert with screw connection<br> <br>Part no. | Male insert with screw connection<br> <br>Part no. |
|---|---|---|---|---|---|---|---|---|---|---|---|
| 71.4 | 3 | 2 | 1 | M 20 | 690/400 V | 600 V | 16 A | 2.5 mm² 12 AWG | 10 | 70.400.0340.0 | 70.410.0340.0 |
| 71.4 | 6 | 2 | 1 | M 25 | 690/400 V | 600 V | 16 A | 2.5 mm² 12 AWG | 10 | 70.400.0640.0 | 70.410.0640.0 |
| 71.2 | 6 | – | 1 | M 25 | 400 V | 600 V | 35 A | 6.0 mm² 8 AWG | 10 | 70.200.0653.0 | 70.210.0653.0 |
| 71.3 | 10 | – | 1 | M 20 | 500 V | 600 V | 16 A | 2.5 mm² 12 AWG | 10 | 70.300.1040.0 | 70.310.1040.0 |
| 71.4 | 10 | 2 | 1 | M 32 | 690/400 V | 600 V | 16 A | 2.5 mm² 12 AWG | 10 | 70.400.1040.0 | 70.410.1040.0 |
| 71.3 | 16 | – | 1 | M 25 | 500 V | 600 V | 16 A | 2.5 mm² 12 AWG | 10 | 70.300.1640.0 | 70.310.1640.0 |
| 71.4 | 16 | 2 | 1 | M 32 | 690/400 V | 600 V | 16 A | 2.5 mm² 12 AWG | 10 | 70.400.1640.0 | 70.410.1640.0 |
| 71.3 | 24 | – | 1 | M 32 | 500 V | 600 V | 16 A | 2.5 mm² 12 AWG | 10 | 70.300.2440.0 | 70.310.2440.0 |
| | | | | | | | | | | Male insert with crimp connection | Male insert with crimp connection |
| 73.7 | 15 | – | 1 | M 20 | 250 V | 600 V | 10 A | 1.5 mm² 16 AWG | 10 | 73.700.1553.0 | 73.710.1553.0 |
| 73.7 | 15 | – | 1 | M 25 | 250 V | 600 V | 10 A | 1.5 mm² 16 AWG | 10 | 73.700.1553.0 | 73.710.1553.0 |
| 73.7 | 25 | – | 1 | M 20 | 250 V | 600 V | 10 A | 1.5 mm² 16 AWG | 10 | 73.700.2553.0 | 73.710.2553.0 |
| 73.7 | 25 | – | 1 | M 25 | 250 V | 600 V | 10 A | 1.5 mm² 16 AWG | 10 | 73.700.2553.0 | 73.710.2553.0 |

# revos

| | Hood with cable gland | Hood with cable gland with locking levers and gasket | Hood with strain relief | Hood with strain relief with locking levers and gasket |
|---|---|---|---|---|
| | | | | |
| Std. pack | Part no. | Part no. | Part no. | Part no. |
| 1 | 77.352.1035.0 | 77.372.1035.0 | 77.352.1035.3 | 77.372.1035.3 |
| 1 | 77.352.1635.0 | 77.372.1635.0 | 77.352.1635.3 | 77.372.1635.3 |
| 1 | 71.352.1635.0 | 71.372.1635.0 | 71.352.1635.3 | 71.372.1635.3 |
| 1 | 71.352.1035.0 | 71.372.1035.0 | 71.352.1035.3 | 71.372.1035.3 |
| 1 | 77.354.2435.0 | 77.374.2435.0 | 77.354.2435.3 | 77.374.2435.3 |
| 1 | 71.352.1635.0 | 71.372.1635.0 | 71.352.1635.3 | 71.372.1635.3 |
| 1 | 77.354.2435.0 | 77.374.2435.0 | 77.354.2435.3 | 77.374.2435.3 |
| 1 | 71.354.2435.0 | 71.374.2435.0 | 71.354.2435.3 | 71.374.2435.3 |
| 1 | 76.352.1535.0 | 76.372.1535.0 | | |
| 1 | 76.354.1535.0 | upon request | | |
| 1 | 76.352.2535.0 | 76.372.2535.0 | | |
| 1 | 76.354.2535.0 | upon request | | |

**Examples:**

10pole connection

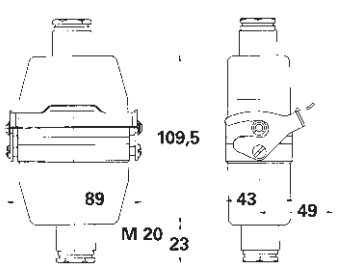


16pole connection

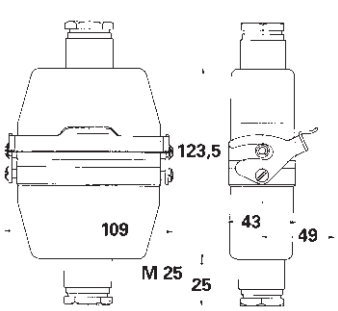


24pole connection

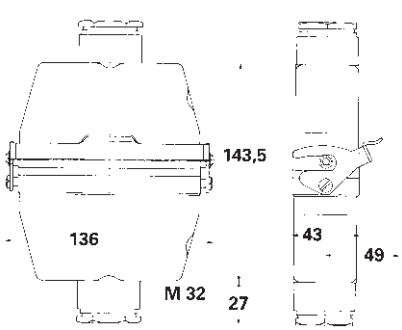

# Modular industrial multipole connectors

## revos FLEX

### Technical Data

| | |
|---|---|
| **Approvals** | UL, CSA |
| **Applicable standards** | IEC 61 984 |
| **Contact inserts** | |
| **3pole** | |
| Rated current | max. 40 A |
| Rated current accord. to UL/CSA | 40 A / 35 A |
| Rated voltage | 630 V |
| Rated voltage accord. to UL/CSA | 600 V |
| Mains voltage | 690 V AC |
| Insulating material | PC, zero halogen |
| Color | pebble gray, RAL 7032 |
| Flammability class | UL 94 V-0 |
| Crimp connection | Ø 3.6 $mm^2$, turned contact |
| **4pole + ground** | |
| Rated current | max. 16 A |
| Rated voltage | 1000 V |
| Insulating material | PA GF, zero halogen |
| Color | black |
| Flammability class | UL 94 V-0 |
| Crimp connection | Ø 2.5 $mm^2$, stamped contact |
| **5pole** | |
| Rated current | max. 20 A |
| Rated current accord. to UL/CSA | 20 A / 16 A |
| Rated voltage | 250 V |
| Rated voltage accord. to UL/CSA | 600 V |
| Insulating material | PC, zero halogen |
| Color | pebble gray, RAL 7032 |
| Flammability class | UL 94 V-0 |
| Crimp connection | Ø 2.5 $mm^2$, turned contact |
| **10pole** | |
| Rated current | max. 10 A |
| Rated current accord. to UL/CSA | 10 A |
| Rated voltage | 250 V |
| Rated voltage accord. to UL/CSA | 600 V |
| Insulating material | PC, zero halogen |
| Color | pebble gray, RAL 7032 |
| Flammability class | UL 94 V-0 |
| Crimp connection | Ø 1.6 $mm^2$, turned contact |
| **20pole** | |
| Rated current | max. 4 A |
| Rated current accord. to UL/CSA | 5 A |
| Rated voltage | 630 V |
| Rated voltage accord. to UL/CSA | 63 V/ 60 V |
| Insulating material | PC, zero halogen |
| Color | pebble gray, RAL 7032 |
| Flammability class | UL 94 V-0 |
| Crimp connection | Ø 1.0 $mm^2$, stamped contact |
| **Contacts** | |
| Material | copper alloy |
| Surface | silver-plated (3, 4, 5 and 10pole)<br>gold-plated (20pole) |

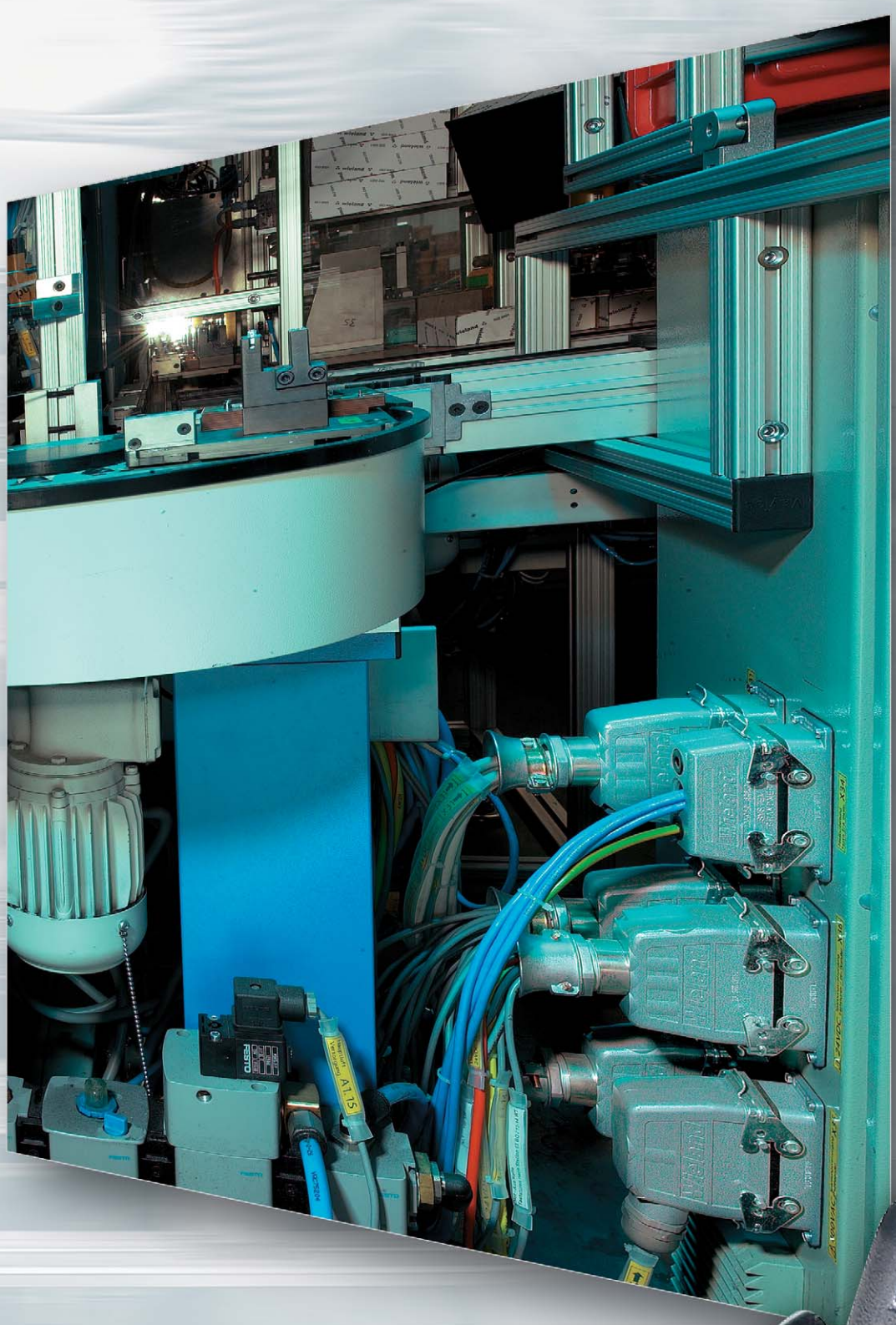

revos

# Industrial Multipole Connectors

# Modular industrial multipole connectors

# revos FLEX

### Manager in terms of performance and flexibility

Industrial multipole connectors function as electro-mechanical interfaces and enable an efficient connection between the power supply and control lines of industrial systems and devices. Their complexity, however, becomes more and more demanding and sets limits to standard connector systems.

Wieland Electric GmbH developed the modular multipole connector system ***revos*** FLEX to meet the requirements of highly complex applications.

The high flexibility of the connector system is characterized by its individual design options which can be adapted to the various applications. The module frames can be fitted with modular inserts of 3 to 20 poles in a voltage range between 100V and 1000V, and for electrical power between 4A and 40A. Flexibility also shows in the fact that the module frames can be fitted inverted, meaning female and male contacts on the same side.

The contacts for the 3, 5 and 10pole modular inserts are turned and silver-plated and can be used for the crimp connection technique. For high-voltage applications, the modular inserts are designed with 4 poles + ground with punched and silver-plated contacts. The contacts of the 20pole modular inserts are also punched, but gold-plated.

You can choose among four sizes of module frames which provide a ground connection at the front.
Die cast aluminum housings are available for 6, 10, 16 and 24pole standard inserts and provide sufficient protection against tough environmental conditions.

### System design

❒ 4 frame sizes
❒ 5 different modules
❒ 17 contact variations
❒ 306 hood and housing options

### System advantages

❒ Flexible usage
  – The modules can be used independently of the signal flow
  – Signal, control and power modules can be combined in one connector
  – Already existing modules can be combined with new modules
  – Future module designs can be used due to the system's modularity
❒ Safe handling
  – The modules are coded and can therefore not be mismated in the frame
  – The connectors can be coded as per the module assignment
  – Easy contact recognition because of the markings
  – Gas-tight crimping
❒ Cost reduction
  – Small quantities of connectors can be implemented cost effectively
  – Reduced number of connectors
  – Low stock due to reduced product variety
  – Higher availability due to reduced product variety
❒ in quantities of 100 pieces or more, the frames can be fitted with empty modules according to your drawings.

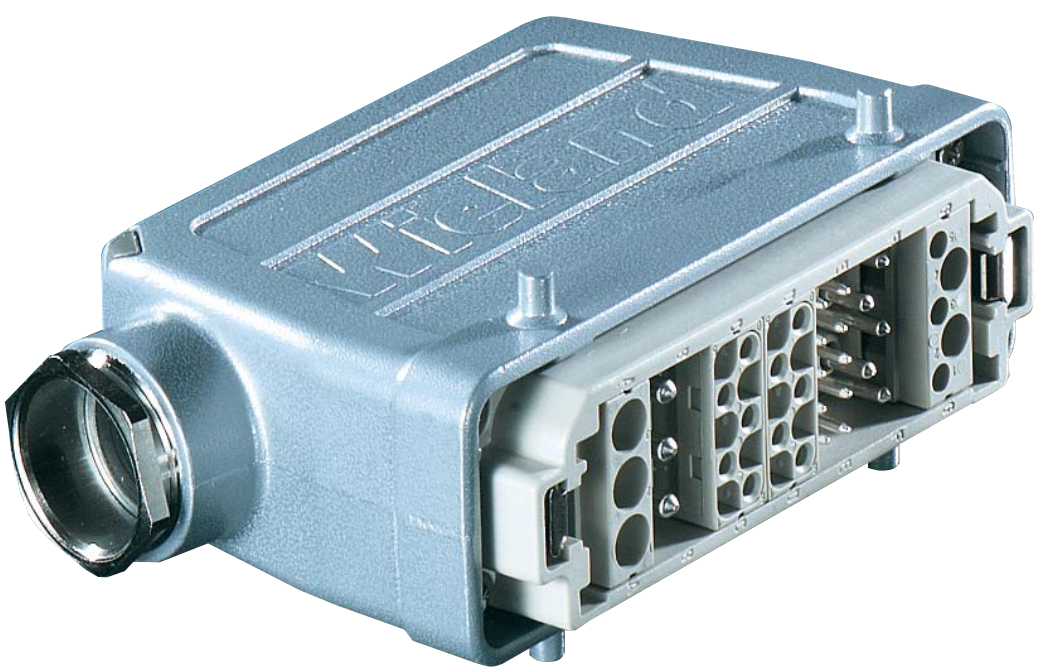

# revos

See the following sequence list to design your own connector:

| | | |
|---|---|---|
| **1** | **Determine the frame** such as: | |
| | Male contact frame, size 10, for 3 modules | 78.010.1053.0 |
| | Female contact frame, size 10, for 3 modules | 78.000.1053.0 |
| **2** | **Determine the housing** such as: | |
| | Hood | 70.350.1035.0 |
| | Housings | 70.320.1028.0 |
| **3** | **Select the modules** such as: | |
| | Modular insert, 3pole, male | 78.014.0353.0 |
| | Modular insert, 3pole, female | 78.004.0353.0 |
| **4** | **Select the contacts** such as: | |
| | Male contacts for 4 $mm^2$ | 05.544.3129.8 |
| | Female contacts for 4 $mm^2$ | 02.125.3129.8 |
| **5** | **Select the crimping tools** such as: | |
| | Crimping tool | 95.101.0800.0 |
| | Crimping die "D" | 05.502.2300.0 |
| | Contact positioner "1" | 05.502.3100.0 |

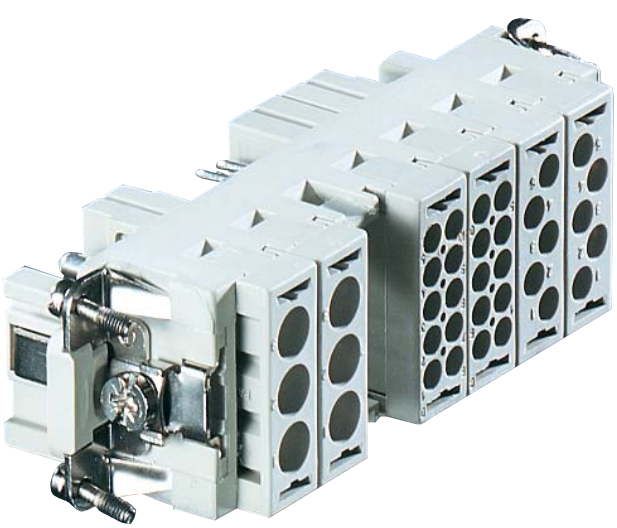

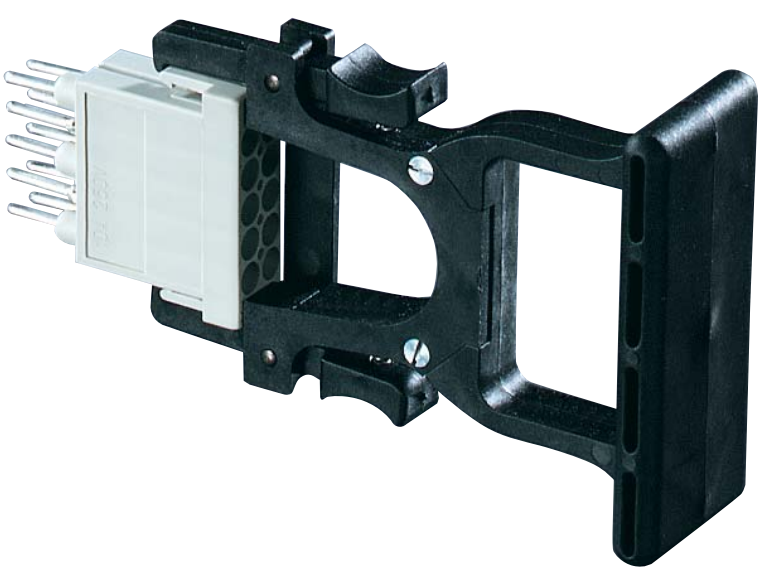

# Modular industrial multipole connectors
## Technical information

**revos** FLEX

### Modular inserts

### Crimp contacts

| Number of poles of the modular inserts | | | Part no. | Stand. pack | Approval/ | | mm² | AWG | Part no. | Stand. pack |
|---|---|---|---|---|---|---|---|---|---|---|
| **3pole** | | | | | | **Contact Ø 3.6 mm** | | | | |
| turned contact Ø | 3.6 mm | | | | | Male | 4.0 | 12 | 05.544.3129.8 | 100 |
| Connection range | see crimp contact Rated | | | | | contact | 6.0 | 10 | 05.544.3229.8 | 100 |
| current / UL/CSA | max. 40 A / 35 A | | | | | | 10.0 | 8 | 05.544.3329.8 | 100 |
| Rated voltage | 630 V/8 kV/3 | | | | | Female | 4.0 | 12 | 02.125.3129.8 | 100 |
| Mains voltage / UL/CSA | 690 V AC / 600 V | | | | | contact | 6.0 | 10 | 02.125.3229.8 | 100 |
| Insulating material | PC, halogen-free | | | | | | 10.0 | 8 | 02.125.3329.8 | 100 |
| Color | pepple gray, RAL 7032 | Modular male insert | 78.014.0353.0 | 10 | | Contact material | | | copper alloy | |
| Flammability class | UL 94 V-0 | Modular fem. insert | 78.004.0353.0 | 10 | | Contact surface | | | Ag | |
| **4pole + ground** | | | | | | **Contact Ø 2.5 mm** | | | | |
| punched ontact Ø | 2.5 mm | | | | | Male | 0.5 – 1.5 | 20 – 16 | 05.544.3429.8 | 100 |
| Connection range | see crimp contact Rated | | | | | contact | 1.5 – 2.5 | 16 – 14 | 05.544.3529.8 | 100 |
| current | max. 16 A | | | | | Female | 0.5 – 1.5 | 20 – 16 | 02.125.3429.8 | 100 |
| Rated voltage | 1000 V/8 kV/3 | | | | | contact | 1.5 – 2.5 | 16 – 14 | 02.125.3529.8 | 100 |
| Insulating material | PA 6.6 GF, halogen-free | | | | | | | | | |
| Color | black | Mod. male insert | 78.013.0453.0 | 10 | | Contact material | | | copper alloy | |
| Flammability class | UL 94 V-0 | Mod. fem. insert | 78.003.0453.0 | 10 | | Contact surface | | | Ag | |
| **5pole** | | | | | | **Contact Ø 2.5 mm** | | | | |
| turned contact Ø | 2.5 mm | | | | | Male | 0.5 | 20 | 05.544.3629.8 | 100 |
| Connection range | see crimp contact Rated | | | | | contact | 0.75 – 1.0 | 18 | 05.544.3729.8 | 100 |
| current | max. 20 A | | | | | | 1.5 | 16 | 05.544.3829.8 | 100 |
| Rated voltage | 250 V/6 kV/3 | | | | | | 2.5 | 14 | 05.544.3929.8 | 100 |
| Insulating material | PC, halogen-free | | | | | | 4.0 | 12 | 05.544.4029.8 | 100 |
| Color | pepple gray, RAL 7032 | | | | | Female | 0.5 | 20 | 02.125.3629.8 | 100 |
| Flammability class | UL 94 V-0 | | | | | contact | 0.75 – 1.0 | 18 | 02.125.3729.8 | 100 |
| | | | | | | | 1.5 | 16 | 02.125.3829.8 | 100 |
| | | | | | | | 2.5 | 14 | 02.125.3929.8 | 100 |
| | | | | | | | 4.0 | 12 | 02.125.4029.8 | 100 |
| | | Mod. male insert | 78.013.0553.0 | 10 | | Contact material | | | copper alloy | |
| | | Mod. fem. insert | 78.003.0553.0 | 10 | | Contact surface | | | Ag | |
| **10pole** | | | | | | **Contact Ø 1.6 mm** | | | | |
| turned contact Ø | 1.6 mm | | | | | Male | 0.14 – 0.37 | 26 – 22 | 05.544.4129.8 | 100 |
| Connection range | see crimp contact Rated | | | | | contact | 0.5 | 20 | 05.544.4229.8 | 100 |
| current | max. 10 A | | | | | | 0.75 – 1.0 | 18 | 05.544.4329.8 | 100 |
| Rated voltage / UL/CSA | 250 V/4 kV/3/ 240 V | | | | | | 1.5 | 16 | 05.544.4429.8 | 100 |
| Insulating material | PC, halogen-free | | | | | | 2.5 | 14 | 05.544.4529.8 | 100 |
| Color | pepple gray, RAL 7032 | | | | | Female | 0.14 – 0.37 | 26 – 22 | 02.125.4129.8 | 100 |
| Flammability class | UL 94 V-0 | | | | | contact | 0.5 | 20 | 02.125.4229.8 | 100 |
| | | | | | | | 0.75 – 1.0 | 18 | 02.125.4329.8 | 100 |
| | | | | | | | 1.5 | 16 | 02.125.4429.8 | 100 |
| | | | | | | | 2.5 | 14 | 02.125.4529.8 | 100 |
| | | Mod. male insert | 78.012.1053.0 | 10 | | Contact material | | | copper alloy | |
| | | Mod. fem. insert | 78.002.1053.0 | 10 | | Contact surface | | | Ag | |
| **20pole** | | | | | | **Contact Ø 1.0 mm** | | | | |
| punched ontact Ø | 1.0 mm | | | | | Male | 0.09 – 0.25 | 28 – 24 | 05.544.4629.7 | 100 |
| Connection range | see crimp contact Rated | | | | | contact | 0.25 – 0.5 | 24 – 20 | 05.544.4729.7 | 100 |
| current / UL/CSA | max. 4 A / 5 A | | | | | Female | 0.09 – 0.25 | 28 – 24 | 02.125.4629.7 | 100 |
| Rated voltage / UL/CSA | 100 V/1.5 kV/3 / 60 V | | | | | contact | 0.25 – 0.5 | 24 – 20 | 02.125.4729.7 | 100 |
| Insulating material | PC, halogen-free | | | | | | | | | |
| Color | pepple gray, RAL 7032 | Male module Female | 78.011.2053.0 | 10 | | Contact material | | | copper alloy | |
| Flammability class | UL 94 V-0 | module | 78.001.2053.0 | 10 | | Contact surface | | | Au | |

# revos

| Crimping tools | Part no. | Stand. pack | Extraction tool for contacts | Part no. | Stand. pack | Extraction tool for modular inserts | Part no. | Stand. pack |
|---|---|---|---|---|---|---|---|---|
| Crimping tool in system kit | 95.101.0800.0 | 1 | | 05.502.0910.0 | 1 | | 05.502.1010.0 | 1 |
| Crimping die "D" | 05.502.2300.0 | 1 | | | | | | |
| Contact positioner "1" | 05.502.3100.0 | 1 | | | | | | |
| Crimping tool in system kit | 95.101.0800.0 | 1 | | 05.502.0610.0 | 1 | | | |
| Crimping die "C" | 05.502.2200.0 | 1 | | | | | | |
| Contact positioner "2" | 05.502.3200.0 | 1 | | | | | | |
| Crimping tool in system kit | 95.101.0800.0 | 1 | | 05.502.0810.0 | 1 | | | |
| Crimping die "B" | 05.502.2100.0 | 1 | | | | | | |
| Contact positioner "1" | 05.502.3100.0 | 1 | | | | | | |
| Crimping tool in system kit | 95.101.0800.0 | 1 | | 05.502.0710.0 | 1 | | | |
| Crimping die "B" | 05.502.2100.0 | 1 | | | | | | |
| Contact positioner "1" | 05.502.3100.0 | 1 | | | | | | |
| Crimping tool in system kit | 95.101.0800.0 | 1 | | 05.502.0410.0 | 1 | | | |
| Crimping die "A" | 05.502.2000.0 | 1 | | | | | | |
| no contact positioner required | | | | | | | | |

**Crimping tools for the modular connectors**

For contact crimping we provide crimping tools in a modular system: This crimping tool system consists of a crimping tool for which you can select the crimping dies and contact positioners for your required contact type.
The crimping dies and the contact positioner are easily inserted in the tool and exchanged. You will require only one crimping tool for several contact types as you can use it with the corresponding crimping dies and contact positioners.

# Modular industrial multipole connectors

# revos FLEX

Male Female

## Module frame

| | |
|---|---|
| Insulating material | PC, halogen-free |
| Color | pepple gray, RAL 7032 |
| Flammability class | UL 94 V-0 |

| | Dimensions in mm | Part no. | Approvals | Stand. pack |
|---|---|---|---|---|
| **Module frame size 6**<br>**for 2 modules**<br> | **Male module frame** **Female module frame**<br> 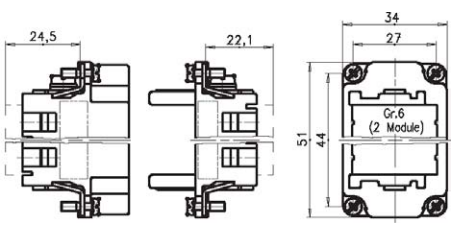 | Male module<br>78.010.0653.0<br><br>Female module frame<br>78.000.0653.0 | UL CSA<br><br>UL CSA | 10<br><br>10 |
| **Module frame size 10**<br>**for 3 modules**<br> | **Male module frame** **Female module frame**<br> 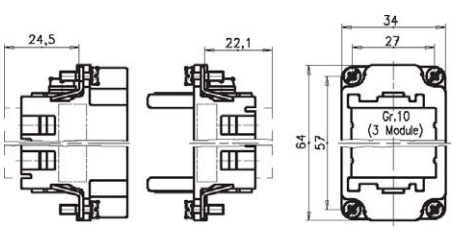 | Male module frame<br>78.010.1053.0<br><br>Female module frame<br>78.000.1053.0 | UL CSA<br><br>UL CSA | 10<br><br>10 |
| **Module frame size 16**<br>**for 5 modules**<br> | **Male module frame** **Female module frame**<br> 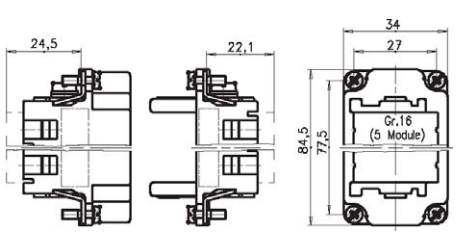 | Male module frame<br>78.010.1653.0<br><br>Female module frame<br>78.000.1653.0 | UL CSA<br><br>UL CSA | 10<br><br>10 |
| **Module frame size 24**<br>**for 7 modules**<br> | **Male module frame** **Female module frame**<br> 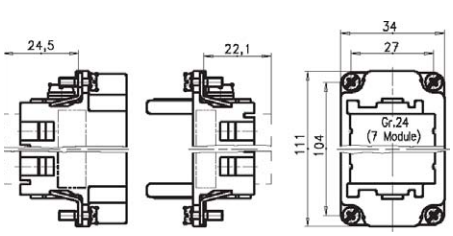 | Male module frame<br>78.010.2453.0<br><br>Female module frame<br>78.000.2453.0 | UL CSA<br><br>UL CSA | 10<br><br>10 |

# revos

**Size 6**
**fitted with 2 modules each**

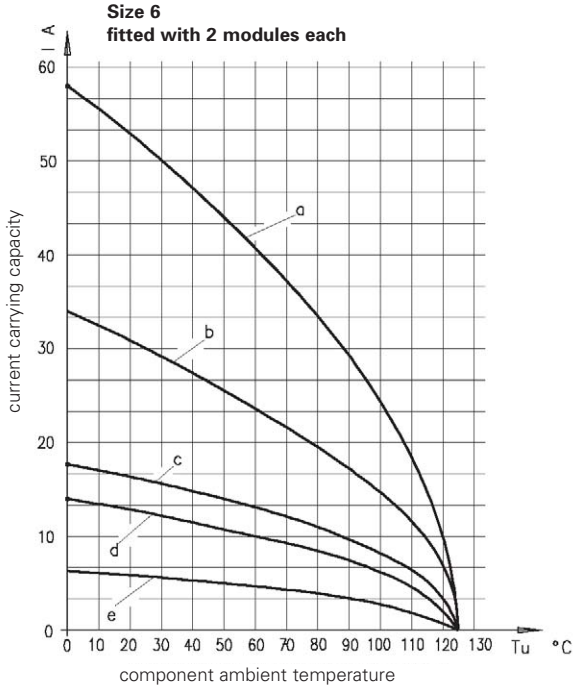


| Curve | Num. of poles | Contact diameter | Connector cross section |
|---|---|---|---|
| a | 6 (2x3) | 3.6 mm, turned | 6.0 mm² / 10 AWG |
| b | 10 (2x5) | 2.5 mm, turned | 2.5 mm² / 14 AWG |
| c | 20 (2x10) | 1.6 mm, turned | 1.5 mm² / 16 AWG |
| e | 40 (2x20) | 1.0 mm, punched | 0.5 mm² / 20 AWG |

**Size 10**
**fitted with 3 modules each**

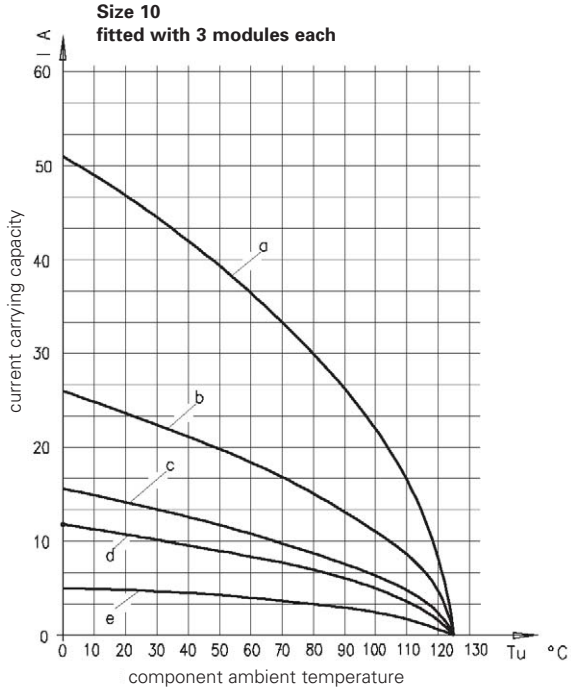


| Curve | Num. of poles | Contact diameter | Connector cross section |
|---|---|---|---|
| a | 9 (3x3) | 3.6 mm, turned | 6.0 mm² / 10 AWG |
| b | 15 (3x5) | 2.5 mm, turned | 2.5 mm² / 14 AWG |
| c | 30 (3x10) | 1.6 mm, turned | 1.5 mm² / 16 AWG |
| e | 60 (3x20) | 1.0 mm, punched | 0.5 mm² / 20 AWG |

**Size 16**
**fitted with 5 modules each**

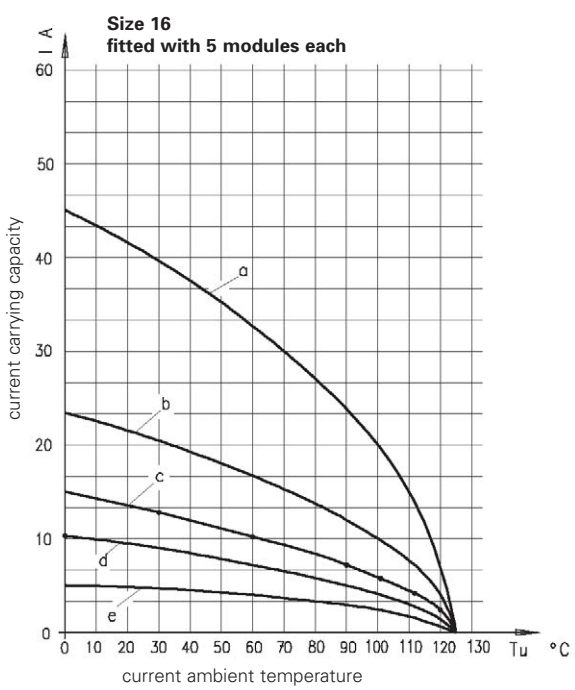


| Curve | Num. of poles | Contact diameter | Connector cross section |
|---|---|---|---|
| a | 15 (5x3) | 3.6 mm, turned | 6.0 mm² / 10 AWG |
| b | 25 (5x5) | 2.5 mm, turned | 2.5 mm² / 14 AWG |
| c | 50 (5x10) | 1.6 mm, turned | 1.5 mm² / 16 AWG |
| e | 100 (5x20) | 1.0 mm, punched | 0.5 mm² / 20 AWG |

**Size 24**
**fitted with 7 modules each**

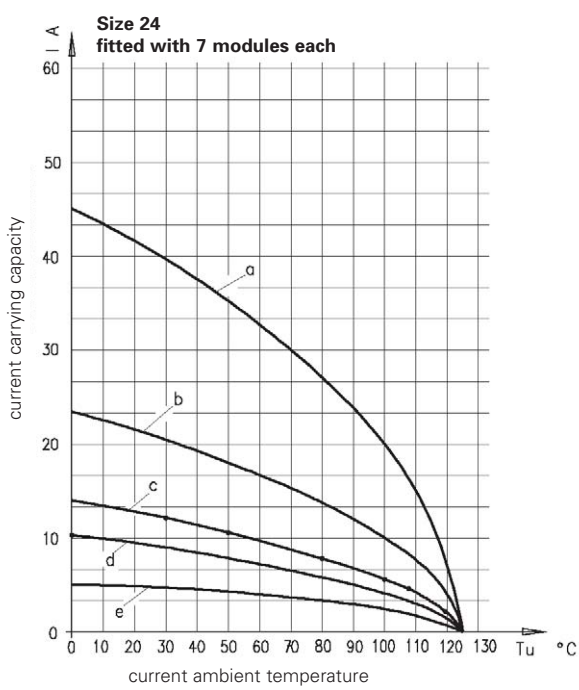


| Curve | Num. of poles | Contact diameter | Connector cross section |
|---|---|---|---|
| a | 21 (7x3) | 3.6 mm, turned | 6.0 mm² / 10 AWG |
| b | 35 (7x5) | 2.5 mm, turned | 2.5 mm² / 14 AWG |
| c | 70 (7x10) | 1.6 mm, turned | 1.5 mm² / 16 AWG |
| e | 140 (7x20) | 1.0 mm, punched | 0.5 mm² / 20 AWG |

# Modular industrial multipole connector
## Hoods with single locking levers

# revos FLEX

**Version A**

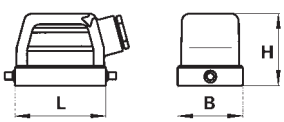


**Version C**

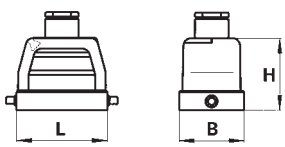

**Degrees of protection: IP 55;**
**IP 65** with the appropriate cable glands (see the accessories)

| Number of poles | Thread | Cable gland type | Dimensions in mm | L | W | H | Stand. pack |
|---|---|---|---|---|---|---|---|
| Size **6**<br>for 2 modular inserts<br>**6pole + ground** | M 20 | 0 with cable gland<br>1 with threaded collar<br>2 with intermediate support<br>3 with strain relief | | 60 | 43 | 47.5 | 1 |
| | M 25 | 0 with cable gland<br>1 with threaded collar<br>2 with intermediate support<br>3 with strain relief | | 60 | 43 | 47.5 | 1 |
| Size **10**<br>for 3 modular inserts<br>**10pole + ground** | M 20 | 0 with cable gland<br>1 with threaded collar<br>2 with intermediate support<br>3 with strain relief | | 73 | 43 | 53 | 1 |
| | M 25 | 0 with cable gland<br>1 with threaded collar<br>2 with intermediate support<br>3 with strain relief | | 73 | 43 | 53 | 1 |
| Size **16**<br>for 5 modular inserts<br>**16pole + ground** | M 25 | 0 with cable gland<br>1 with threaded collar<br>2 with intermediate support<br>3 with strain relief | | 93.5 | 43 | 76 | 1 |
| | M 32 | 0 with cable gland<br>1 with threaded collar<br>2 with intermediate support<br>3 with strain relief | | 93.5 | 43 | 76 | 1 |
| Size **24**<br>for 7 modular inserts<br>**24pole + ground** | M 25 | 0 with cable gland<br>1 with threaded collar<br>2 with intermediate support<br>3 with strain relief | | 120 | 43 | 76 | 1 |
| | M 32 | 0 with cable gland<br>1 with threaded collar<br>2 with intermediate support<br>3 with strain relief | | 120 | 43 | 76 | 1 |

# revos

| Hood<br><br>Version A<br><br> | Hood<br><br>Version C<br><br> |
|---|---|
| Part no. | Part no. |
| 70.350.0635.0<br>70.350.0635.1<br>70.350.0635.2<br>70.350.0635.3 | 70.352.0635.0<br>70.352.0635.1<br>70.352.0635.2<br>70.352.0635.3 |
| 70.353.0635.0<br>70.353.0635.1<br>70.353.0635.2<br>70.353.0635.3 | 70.354.0635.0<br>70.354.0635.1<br>70.354.0635.2<br>70.354.0635.3 |
| 71.350.1035.0<br>71.350.1035.1<br>71.350.1035.2<br>71.350.1035.3 | 71.352.1035.0<br>71.352.1035.1<br>71.352.1035.2<br>71.352.1035.3 |
| 71.353.1035.0<br>71.353.1035.1<br>71.353.1035.2<br>71.353.1035.3 | 71.354.1035.0<br>71.354.1035.1<br>71.354.1035.2<br>71.354.1035.3 |
| 76.350.4035.0<br>76.350.4035.1<br>76.350.4035.2<br>76.350.4035.3 | 76.352.4035.0<br>76.352.4035.1<br>76.352.4035.2<br>76.352.4035.3 |
| 76.353.4035.0<br>76.353.4035.1<br>76.353.4035.2<br>76.353.4035.3 | 76.354.4035.0<br>76.354.4035.1<br>76.354.4035.2<br>76.354.4035.3 |
| 76.350.6435.0<br>76.350.6435.1<br>76.350.6435.2<br>76.350.6435.3 | 76.352.6435.0<br>76.352.6435.1<br>76.352.6435.2<br>76.352.6435.3 |
| 76.353.6435.0<br>76.353.6435.1<br>76.353.6435.2<br>76.353.6435.3 | 76.354.6435.0<br>76.354.6435.1<br>76.354.6435.2<br>76.354.6435.3 |

# Modular industrial multipole connectors
## Housings with single locking levers

**revos** FLEX

**Version a**

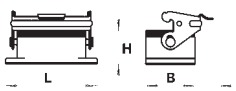


**Version b**

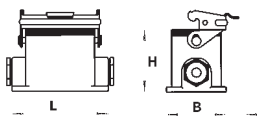


**Version c**

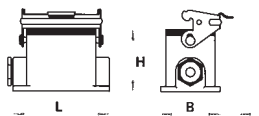


**Version d**

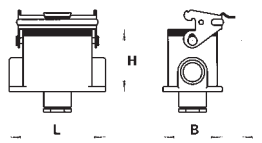


**Version i**

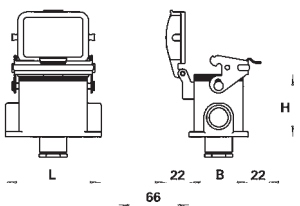


| | Open-bottom housing | Closed-bottom housing with two narrow-side entry cable glands | Closed bottom housing with one narrow-side entry cable gland on the left |
|---|---|---|---|
| | Version a | Version b | Version c |
| | | | |

**Degrees of protection: IP 55; IP 65**
with the appropriate cable glands (see the accessories)

| Number of poles | Thread | Cable gland type | L | W | H | Std. pack | Part no. | Part no. | Part no. |
|---|---|---|---|---|---|---|---|---|---|
| Size **6** | | | 80 | 43 | 28 | 1 | 70.320.0628.0 | | |
| for 2 modular inserts | M 20 | 0 with cable gland | 84 | 52 | 54.5 | 1 | | 70.330.0635.0 | 70.331.0635.0 |
| | | 1 with threaded collar | 84 | 52 | 54.5 | 1 | | 70.330.0635.1 | 70.331.0635.1 |
| Size **10** | | | 93 | 43 | 28 | 1 | 71.320.1028.0 | | |
| for 3 modular inserts | M 20 | 0 with cable gland | 94 | 52 | 54.5 | 1 | | 71.330.1035.0 | 71.331.1035.0 |
| | | 1 with threaded collar | 94 | 52 | 54.5 | 1 | | 71.330.1035.1 | 71.331.1035.1 |
| Size **16** | | | 113 | 43 | 28 | 1 | 71.320.1628.0 | | |
| high design | M 25 | 0 with cable gland | 117 | 52 | 76.5 | 1 | | 76.330.4035.0 | 76.331.4035.0 |
| for 5 modular inserts | | 1 with threaded collar | 117 | 52 | 76.5 | 1 | | 76.330.4035.1 | 76.331.4035.1 |
| | M 32 | 0 with cable gland | 117 | 52 | 76.5 | 1 | | 76.334.4035.0 | 76.335.4035.0 |
| | | 1 with threaded collar | 117 | 52 | 76.5 | 1 | | 76.334.4035.1 | 76.335.4035.1 |
| Size **24** | | | 140 | 43 | 28 | 1 | 71.320.2428.0 | | |
| high design | M 25 | 0 with cable gland | 144 | 52 | 76.5 | 1 | | 76.330.6435.0 | 76.331.6435.0 |
| for 7 modular inserts | | 1 with threaded collar | 144 | 52 | 76.5 | 1 | | 76.330.6435.1 | 76.331.6435.1 |
| | M 32 | 0 with cable gland | 144 | 52 | 76.5 | 1 | | 76.334.6435.0 | 76.335.6435.0 |
| | | 1 with threaded collar | 144 | 52 | 76.5 | 1 | | 76.334.6435.1 | 76.335.6435.1 |

**Ø 4.3/M 4**

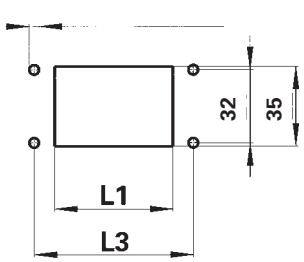


Mounting dimensions and cut-outs for open-bottom housings

| Housing size | (mm) L1 | (mm) L3 |
|---|---|---|
| **6** | 52 | 70 |
| **10** | 65 | 83 |
| **16** | 85.5 | 103 |
| **24** | 112 | 130 |

# revos

**Version e**

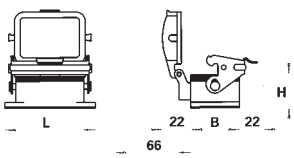


**Version f**

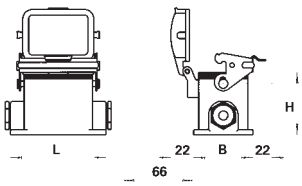


**Version g**

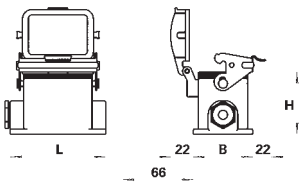


**Version h**

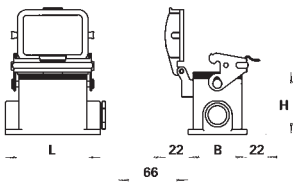


| Closed-bottom housing with bottom entry cable gland<br><br>Version d | Open-bottom housing with protective cover<br><br>Version e | Closed-bottom housing with two narrow-side entry cable glands and protective cover<br><br>Version f | Closed bottom housing with one narrow-side entry cable gland on the left and protective cover<br><br>Version g | Closed bottom housing with one narrow-side entry cable gland on the right and protective cover<br><br>Version h | Closed bottom housing with bottom entry cable gland and protective cover<br><br>Version i |
|---|---|---|---|---|---|
| | | | | | |
| Part no. | Part no. | Part no. | Part no. | Part no. | Part no. |
| 70.333.0635.0<br>70.333.0635.1 | 70.325.0628.0 | 70.340.0635.0<br>70.340.0635.1 | 70.341.0635.0<br>70.341.0635.1 | 70.342.0635.0<br>70.342.0635.1 | 70.343.0635.0<br>70.343.0635.1 |
| 71.333.1035.0<br>71.333.1035.1 | 71.325.1028.0 | 71.340.1035.0<br>71.340.1035.1 | 71.341.1035.0<br>71.341.1035.1 | 71.342.1035.0<br>71.342.1035.1 | 71.343.1035.0<br>71.343.1035.1 |
| 76.333.4035.0<br>76.333.4035.1 | 71.325.1628.0 | 76.340.4035.0<br>76.340.4035.1 | 76.341.4035.0<br>76.341.4035.1 | 76.342.4035.0<br>76.342.4035.1 | 76.343.4035.0<br>76.343.4035.1 |
| 76.337.4035.0<br>76.337.4035.1 | | 76.344.4035.0<br>76.344.4035.1 | 76.345.4035.0<br>76.345.4035.1 | 76.346.4035.0<br>76.346.4035.1 | 76.347.4035.0<br>76.347.4035.1 |
| 76.333.6435.0<br>76.333.6435.1 | 71.325.2428.0 | 76.340.6435.0<br>76.340.6435.1 | 76.341.6435.0<br>76.341.6435.1 | 76.342.6435.0<br>76.342.6435.1 | 76.343.6435.0<br>76.343.6435.1 |
| 76.337.6435.0<br>76.337.6435.1 | | 76.344.6435.0<br>76.344.6435.1 | 76.345.6435.0<br>76.345.6435.1 | 76.346.6435.0<br>76.346.6435.1 | 76.343.6435.0<br>76.343.6435.1 |

| Housing size | L5 (mm) | L6 (mm) |
|---|---|---|
| **6** | 70 | 40 |
| **10** | 82 | 40 |
| **16** | 105 | 45 |
| **24** | 132 | 45 |

Mounting dimensions for closed-bottom housings

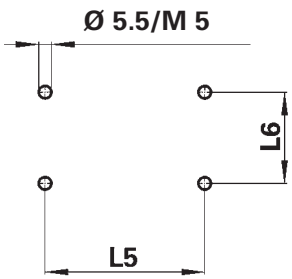

# Modular industrial multipole connectors
## Hoods with double locking levers

# revos FLEX

**Version A**

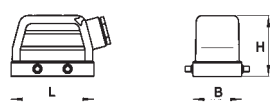


**Version C**

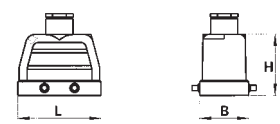


**Degrees of protection: IP 55; IP 65**
with the appropriate cable glands (see the accessories)

| Number of poles | Thread | Cable gland type | Dimensions in mm | L | W | H | Stand. pack |
|---|---|---|---|---|---|---|---|
| Size**10**<br>for 3 modular inserts | M 20 | 0 with cable gland<br>1 with threaded collar<br>2 with intermediate support<br>3 with strain relief | | 73 | 43 | 53 | 1 |
| | M 32 | 0 with cable gland<br>1 with threaded collar<br>2 with intermediate support<br>3 with strain relief | | 73 | 43 | 76 | 1 |
| Size **16**<br>for 5 modular inserts | M 25 | 0 with cable gland<br>1 with threaded collar<br>2 with intermediate support<br>3 with strain relief | | 93.5 | 43 | 76 | 1 |
| | M 32 | 0 with cable gland<br>1 with threaded collar<br>2 with intermediate support<br>3 with strain relief | | 93.5 | 43 | 76 | 1 |
| Size **24**<br>for 7 modular inserts | M 25 | 0 with cable gland<br>1 with threaded collar<br>2 with intermediate support<br>3 with strain relief | | 120 | 43 | 76 | 1 |
| | M 32 | 0 with cable gland<br>1 with threaded collar<br>2 with intermediate support<br>3 with strain relief | | 120 | 43 | 76 | 1 |

# revos

**Version D**

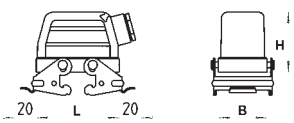


**Version F**

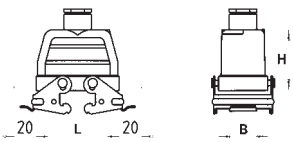


| Hood<br><br>Version A | Hood<br><br>Version C | Hood<br>with locking levers<br><br>Version D | Hood<br>with locking levers<br><br>Version F | |
|---|---|---|---|---|
| | | | | |
| Part no. | Part no. | Part no. | Part no. | |
| 70.350.1035.0<br>70.350.1035.1<br>70.350.1035.2<br>70.350.1035.3 | 70.352.1035.0<br>70.352.1035.1<br>70.352.1035.2<br>70.352.1035.3 | 70.355.1035.0<br>70.355.1035.1<br>70.355.1035.2<br>70.355.1035.3 | 70.357.1035.0<br>70.357.1035.1<br>70.357.1035.2<br>70.357.1035.3 | |
| 73.353.1035.0<br>73.353.1035.1<br>73.353.1035.2<br>73.353.1035.3 | 73.354.1035.0<br>73.354.1035.1<br>73.354.1035.2<br>73.354.1035.3 | | | |
| 73.350.4035.0<br>73.350.4035.1<br>73.350.4035.2<br>73.350.4035.3 | 73.352.4035.0<br>73.352.4035.1<br>73.352.4035.2<br>73.352.4035.3 | 73.355.4035.0<br>73.355.4035.1<br>73.355.4035.2<br>73.355.4035.3 | 73.357.4035.0<br>73.357.4035.1<br>73.357.4035.2<br>73.357.4035.3 | |
| 73.353.4035.0<br>73.353.4035.1<br>73.353.4035.2<br>73.353.4035.3 | 73.354.4035.0<br>73.354.4035.1<br>73.354.4035.2<br>73.354.4035.3 | 73.358.4035.0<br>73.358.4035.1<br>73.358.4035.2<br>73.358.4035.3 | 73.359.4035.0<br>73.359.4035.1<br>73.359.4035.2<br>73.359.4035.3 | |
| 73.350.6435.0<br>73.350.6435.1<br>73.350.6435.2<br>73.350.6435.3 | 73.352.6435.0<br>73.352.6435.1<br>73.352.6435.2<br>73.352.6435.3 | 73.355.6435.0<br>73.355.6435.1<br>73.355.6435.2<br>73.355.6435.3 | 73.357.6435.0<br>73.357.6435.1<br>73.357.6435.2<br>73.357.6435.3 | |
| 73.353.6435.0<br>73.353.6435.1<br>73.353.6435.2<br>73.353.6435.3 | 73.354.6435.0<br>73.354.6435.1<br>73.354.6435.2<br>73.354.6435.3 | 73.358.6435.0<br>73.358.6435.1<br>73.358.6435.2<br>73.358.6435.3 | 73.359.6435.0<br>73.359.6435.1<br>73.359.6435.2<br>73.359.6435.3 | |

# Modular industrial multipole connectors
## Housings with double locking levers

**revos** FLEX

**Version a**

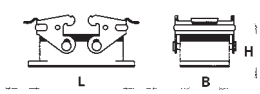


**Version b**

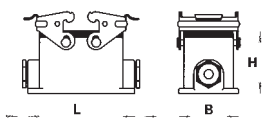


**Version c**

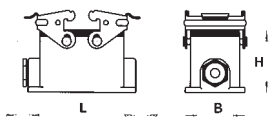


**Version d**

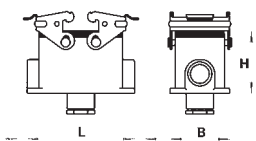


**Version i**

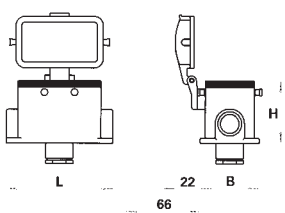


**Degrees of protection:**
**IP 55**
**IP 65** with the appropriate cable glands (see the access.)

| | Open-bottom housing | Closed-bottom housing with two narrow-side entry cable glands | Closed bottom housing with one narrow-side entry cable gland on the left |
|---|---|---|---|
| | Version a | Version b | Version c |
| | | | |

| Number of poles | Thread | Cable gland type | L | W | H | Stand. pack | Part no. | Part no. | Part no. |
|---|---|---|---|---|---|---|---|---|---|
| Size**10** | | | 93 | 43 | 28 | 1 | 70.320.1028.0 | | |
| for 3 modular inserts | M 20 | 0 with cable gland | 94 | 52 | 54.5 | 1 | | 70.330.1035.0 | 70.331.1035.0 |
| | | 1 with threaded collar | 94 | 52 | 54.5 | 1 | | 70.330.1035.1 | 70.331.1035.1 |
| Size **16** | | | 113 | 43 | 28 | 1 | 70.320.1628.0 | | |
| high design | M 25 | 0 with cable gland | 117 | 52 | 76.5 | 1 | | 73.330.4035.0 | 73.331.4035.0 |
| for 5 modular inserts | | 1 with threaded collar | 117 | 52 | 76.5 | 1 | | 73.330.4035.1 | 73.331.4035.1 |
| Size **16** | | 0 with cable gland | | | | | | | |
| high design | M 32 | 1 with threaded collar | 117 | 52 | 76.5 | 1 | | 73.334.4035.0 | 73.335.6435.0 |
| for 5 modular inserts | | | 117 | 52 | 76.5 | 1 | | 73.334.4035.1 | 73.335.6435.1 |
| Size **24** | | 0 with cable gland | 140 | 43 | 28 | 1 | 70.320.2428.0 | | |
| high design | M 25 | 1 with threaded collar | 144 | 52 | 76.5 | 1 | | 73.330.6435.0 | 73.331.4035.0 |
| for 7 modular inserts | | | 144 | 52 | 76.5 | 1 | | 73.330.6435.1 | 73.331.4035.1 |
| Size **24** | | 0 with cable gland | 140 | 43 | 28 | 1 | | | |
| high design | M 32 | 1 with threaded collar | 144 | 52 | 76.5 | 1 | | 73.334.6435.0 | 73.335.6435.0 |
| for 7 modular inserts | | | 144 | 52 | 76.5 | 1 | | 73.334.6435.1 | 73.335.6435.1 |

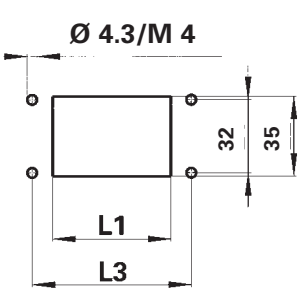


Mounting dimensions and cut-outs for open-bottom housings

| Housing size | (mm) L1 | (mm) L3 |
|---|---|---|
| **10** | 65 | 83 |
| **16** | 85.5 | 103 |
| **24** | 112 | 130 |

# revos

## Version e

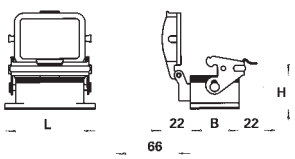


## Version f

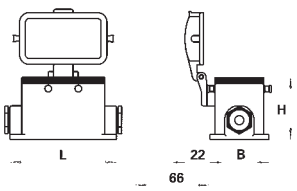


## Version g

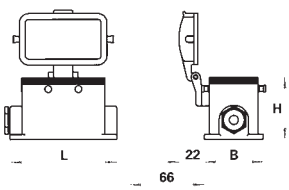


## Version h

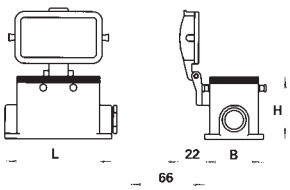


| Closed-bottom housing with bottom entry cable gland<br><br>Version d | Open-bottom housing with protective cover<br><br>Version e | Closed-bottom housing with two narrow-side entry cable glands and protective cover<br><br>Version f | Closed bottom housing with one narrow-side entry cable gland on the left and protective cover<br><br>Version g | Closed bottom housing with one narrow-side entry cable gland on the right and protective cover<br><br>Version h | Closed bottom housing with bottom entry cable gland and protective cover<br><br>Version i |
|---|---|---|---|---|---|
| | | | | | |
| Part no. | Part no. | Part no. | Part no. | Part no. | Part no. |
| 70.333.1035.0<br>70.333.1035.1 | 70.325.1028.0 | 70.340.1035.0<br>70.340.1035.1 | 70.341.1035.0<br>70.341.1035.1 | 70.342.1035.0<br>70.342.1035.1 | 70.343.1035.0<br>70.343.1035.1 |
| 73.333.4035.0<br>73.333.4035.1 | 70.325.1628.0 | 73.340.4035.0<br>73.340.4035.1 | 73.341.4035.0<br>73.341.4035.1 | 73.342.4035.0<br>73.342.4035.1 | 73.343.4035.0<br>73.343.4035.1 |
| 73.337.4035.0<br>73.337.4035.1 | | 73.344.4035.0<br>73.344.4035.1 | 73.345.4035.0<br>73.345.4035.1 | 73.346.4035.0<br>73.346.4035.1 | 73.347.4035.0<br>73.347.4035.1 |
| 73.333.6435.0<br>73.333.6435.1 | 70.325.2428.0 | 73.340.6435.0<br>73.340.6435.1 | 73.341.6435.0<br>73.341.6435.1 | 73.342.6435.0<br>73.342.6435.1 | 73.343.6435.0<br>73.343.6435.1 |
| 73.337.6435.0<br>73.337.6435.1 | | 73.344.6435.0<br>73.344.6435.1 | 73.345.6435.0<br>73.345.6435.1 | 73.346.6435.0<br>73.346.6435.1 | 73.347.6435.0<br>73.347.6435.1 |

Mounting dimensions for closed-bottom housings

| Housing size | L5 (mm) | L6 (mm) |
|---|---|---|
| **10** | 82 | 40 |
| **16** | 105 | 45 |
| **24** | 132 | 45 |

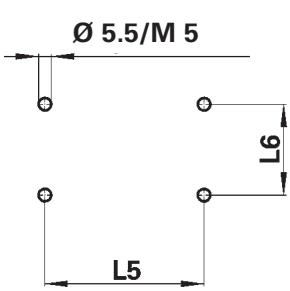

# revos IT

## Technical information

| | |
|---|---|
| **Applicable standards** | IEC 61 984 |
| **Hoods and housings** | |
| Material | die cast aluminum alloy |
| Surface | silver gray, silicon-free finish |
| Clamping screws | galvanically zinc-plated steel |
| Locking levers: | Steel, galvanically zinc-plated and dichromated |
| Gaskets | Neoprene (oil-resistant and anti-aging) |
| 1 cable feed-through | Cable diameter: 2 – 10 mm |
| 2 cable feed-throughs | Cable diameter: 9 - 15 mm |
| Temperature range | –40 to +100 °C |
| Degree of protection accord. to DIN EN 60 529 | |
| with latched locking levers | IP 55 |
| with appropriate cable glands | IP 65 |

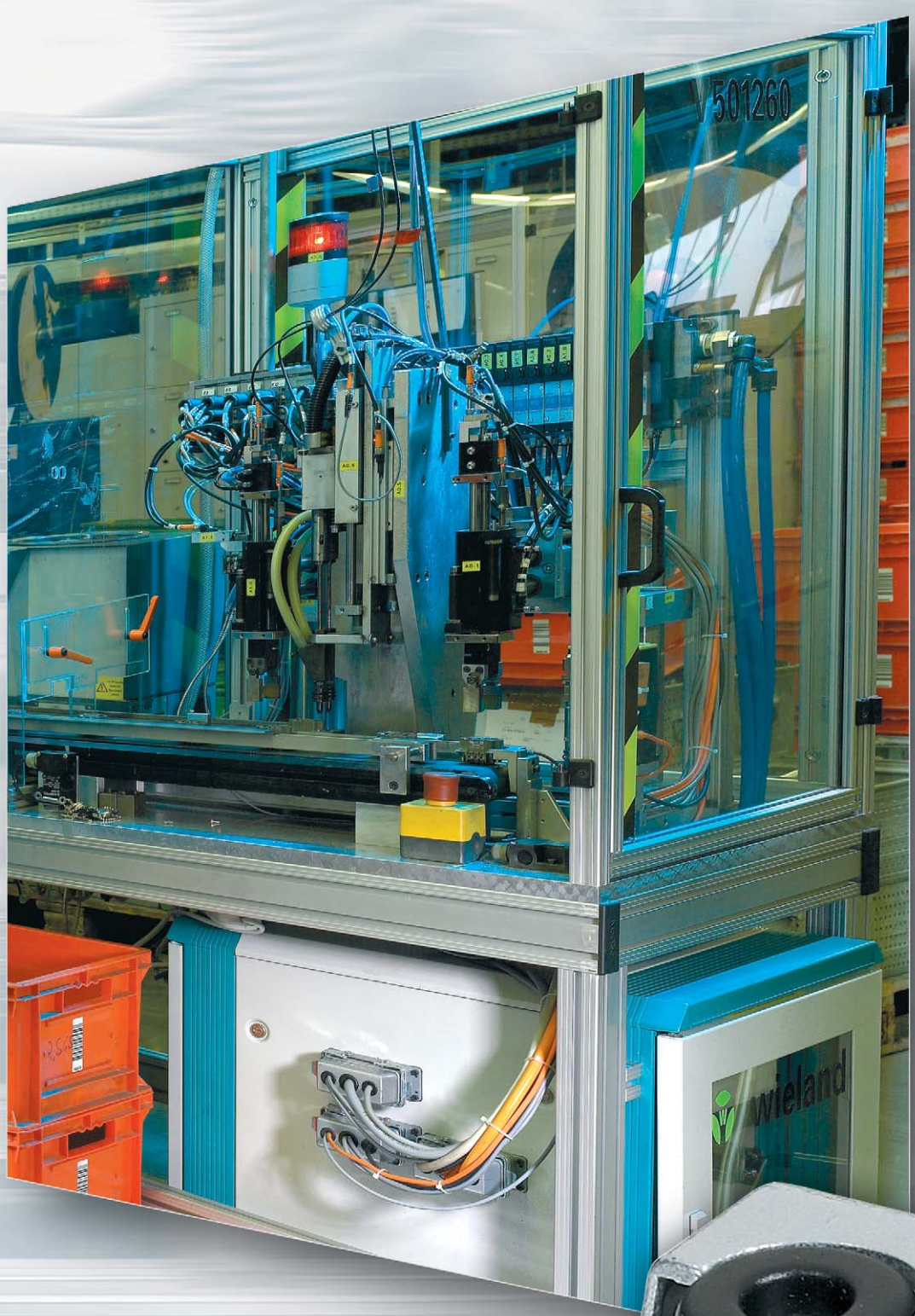

revos

# Industrial Multipole Connectors

# Industrial multipole connectors
# Data cable feed-through

## revos IT

The data cable feed-through can be separated.
The two halves, one of which has ring-shaped rubber gaskets, are closed by means of two threaded screws.
Inside each of the two halves a special rubber clamping profile properly seals the cables. Three metal clips provide the strain relief.

The **data cable feed-through** was designed to insert cables into closed housings, tightly and with strain relief, without having to disassemble the connectors. It is the ideal technique for connection cables of PLCs, data cables, measuring and encoder lines.

Each data cable feed-through has three feed-through facilities for cables of different diameters. Feed-through holes which are not used can be sealed with plastic covers.

The data cable feed-through can be snapped onto a 16pole housing without an insert. These housings normally provide enough space to insert the connectors of data cables or measuring lines without a problem.

**Technical information**

Hood and housing

Die cast aluminum alloy with silicon-free finish in silver gray

| | |
|---|---|
| Temperature range: | –40 °C bis +100 °C |
| Clamping screws: | galvanically zinc-plated steel |
| Locking levers: | steel, galvanically zinc-plated and dichromated |
| Gaskets: | Neoprene (oil-resistant and anti-aging) |

They meet the degree of protection IP 65 accord. to EN 60 529:
(IEC 60 529: 1989, 2nd edition)

2 cable feed-throughs for cable diameters of 2 mm – 10 mm

1 cable feed-through for cable diameters of 2 mm – 15 mm

# revos

| Type | Part no. | Stand. pack |
|---|---|---|
| Data cable feed-through | 70.060.1628.0 | 10 |
| Housing, 16pole | 70.320.1628.0 | 1 |

Rubber gaskets can be ordered as replacement parts

| Rubber gasket for: | | |
|---|---|---|
| Connection range 2 mm – 10 mm | 05.562.3183.0 | 10 |
| Connection range 9 mm – 15 mm | 05.562.3283.0 | 10 |

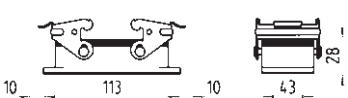


Mounting dimensions and cut-outs for open-bottom housings (mm)

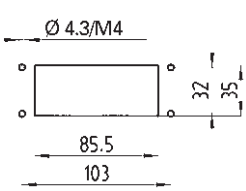

# Industrial multipole connectors with single locking levers, 9 to 100pole
## D-Sub connectors

**revos** IT

## D-Sub connectors

**Degrees of protection: IP 55**
**IP 65** with appropriate cable glands

| Pole configuration | Part no. | Stand. pack | Part no. | Stand. pack | Size |
|---|---|---|---|---|---|
| | Housing with female connector | | Hood with male connector | | |
| 9pole | Z7.415.0010.0 | | Z7.415.0235.0 | 10 | 6 |
| 2 x 9 = 18pole | Z7.415.0110.0 | | Z7.415.0335.0 | 10 | 6 |
| 15pole | Z7.415.0810.0 | | Z7.415.1035.0 | 10 | 6 |
| 2 x 15 = 30pole | Z7.415.0910.0 | | Z7.415.1135.0 | 10 | 6 |
| 25pole | Z7.415.1610.0 | | Z7.415.1935.0 | 10 | 10 |
| 15 + 25 = 40pole | Z7.415.1810.0 | | Z7.415.2135.0 | 10 | 10 |
| 2 x 25 = 50pole | Z7.415.1710.0 | | Z7.415.2035.0 | 10 | 10 |
| 37pole | Z7.415.2410.0 | | Z7.415.2635.0 | 10 | 16 |
| 2 x 37 = 74pole | Z7.415.2510.0 | | Z7.415.2735.0 | 10 | 16 |
| 50pole | Z7.415.3210.0 | | Z7.415.3335.0 | 10 | 16 |
| 2 x 50 = 100pole | Z7.415.3410.0 | | Z7.415.3535.0 | 10 | 16 |

# revos

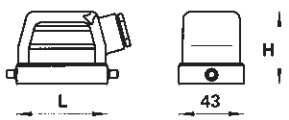


| Housing size | L (mm) | H (mm) |
|---|---|---|
| **6** | 60 | 47.5 |
| **10** | 73 | 53 |
| **16** | 93.5 | 60 |

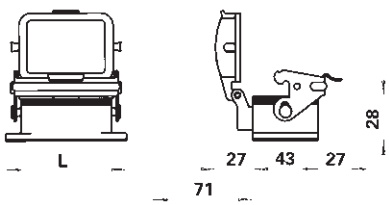


| Housing size | L (mm) |
|---|---|
| **6** | 80 |
| **10** | 93 |
| **16** | 113 |

**Delivery standard:**
Hood/housing, D-Sub connector, mounting screws and mounting plates are delivered unassembled.

Hood with M 20 cable gland

The contacts are nickle-plated and hard-gold-plated in the contact area.

| | | |
|---|---|---|
| Current carrying capacity per contact with ambient temperatures of: | + 20 °C | 5 A |
| | + 70 °C | 3 A |
| | + 100 °C | 1.5 A |
| Solder connection | max. 0.5 mm² | |
| Rated voltage | 40 V/1 kV/2 | |

Mounting dimensions and cut-outs for open-bottom housings (mm)

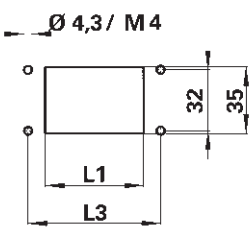


| Housing size | L1 (mm) | L3 (mm) |
|---|---|---|
| **6** | 52 | 70 |
| **10** | 65 | 83 |
| **16** | 85.5 | 103 |

# Industrial multipole connectors

# revos MOT

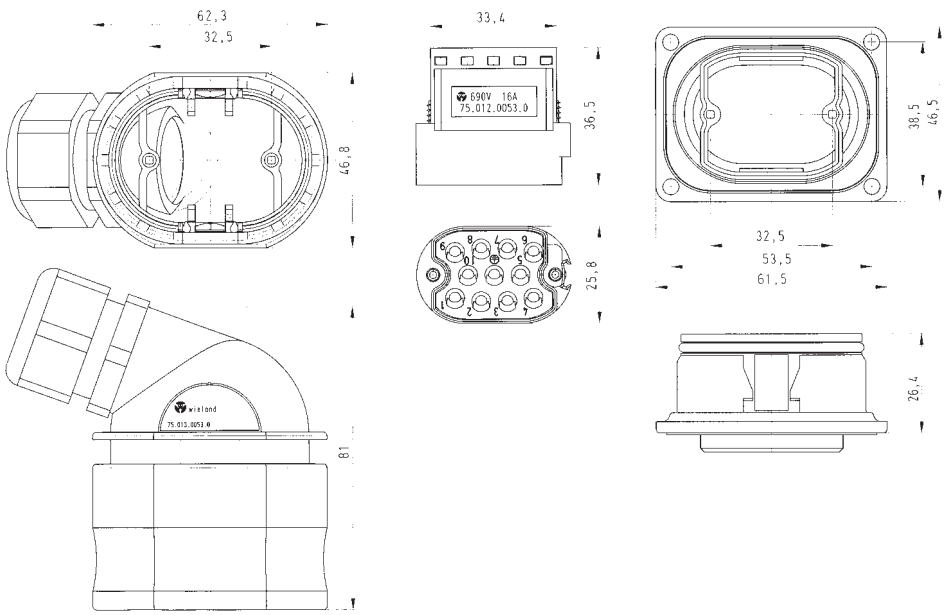


**600 V** UL/CSA

**690 V, 16 A** IEC 61 984

| Number of poles | | Thread | Number of poles | ≥Øk in mm | Approvals | Cable entry side | Stand. pack | Part no. |
|---|---|---|---|---|---|---|---|---|
| | Hood with IP 65 cable gland | M 25 | 10pole<br>10pole | | | narrow side | 10 | 75.013.0051.0 |
| | Hood with compression gland | M 25 | 10pole | | | narrow side | 10 | 75.013.0051.2 |
| | Housing | | 10pole + ground | | | open-bottom | 10 | 75.013.5051.0 |
| | Female insert | | 10pole + ground | | | | 10 | 75.012.0053.0 |
| | Male insert | | 10pole + ground | | | | 10 | 75.012.5053.0 |
| | Cable gland, standard | M 25 x 1.5 | | 9 – 16 | | | | Z5.507.1453.1 |
| | Cable gland | M 25 x 1.5 | | 13 – 18 | | | | Z5.507.1553.1 |

# revos

## Contacts for crimp version

| | Ø in mm² | | Part no. | Stand. pack | Ø in mm² | | Part no. | Stand. pack |
|---|---|---|---|---|---|---|---|---|
| | | | tin-plated | | | | gold-plated | |
| **Female contacts** | 0.5 | 20 AWG | 02.123.7021.0 | 200 | 0.5 | 20 AWG | 02.123.7001.0 | upon request |
| | 0.75 – 1 | 18 AWG | 02.123.7121.0 | 200 | 0.75 – 1 | 18 AWG | 02.123.7101.0 | upon request |
| | 1.5 | 16 AWG | 02.123.7221.0 | 200 | 1.5 | 16 AWG | 02.123.7201.0 | upon request |
| | 2.5 | 14 AWG | 02.123.7321.0 | 200 | 2.5 | 14 AWG | 02.123.7301.0 | upon request |
| | 4 | 12 AWG | 02.123.7421.0 | 200 | 4 | 12 AWG | 02.123.7401.0 | upon request |
| **Male contacts** | 0.5 | 20 AWG | 05.543.7021.0 | 200 | 0.5 | 20 AWG | 05.543.7001.0 | upon request |
| | 0.75 – 1 | 18 AWG | 05.543.7121.0 | 200 | 0.75 – 1 | 18 AWG | 05.543.7101.0 | upon request |
| | 1.5 | 16 AWG | 05.543.7221.0 | 200 | 1.5 | 16 AWG | 05.543.7201.0 | upon request |
| | 2.5 | 14 AWG | 05.543.7321.0 | 200 | 2.5 | 14 AWG | 05.543.7301.0 | upon request |
| | 4 | 12 AWG | 05.543.7421.0 | 200 | 4 | 12 AWG | 05.543.7401.0 | upon request |
| Crimping tool | | | 95.101.0800.0 | 1 | | | | |
| Crimping die "B" | | | 05.502.2100.0 | 1 | | | | |
| Contact positioner "3" | | | 05.502.3300.0 | 1 | | | | |
| Extraction tool | | | 05.502.3500.0 | 1 | | | silver-plated upon request | |

**Technical information:**

| | |
|---|---|
| Rated current: | 16 A |
| Rated voltage: | 690 V |
| Nominal voltage accord. to UL: | 600 V |
| Nominal voltage accord. to CSA: | 600 V |
| Rated cross section: | 0.5 – 4 mm²<br>20 – 12 AWG |
| Pollution degree: | 3 |
| Rated peak voltage | 8 kV |
| Temperature range: | –40 °C to +80 °C |
| Flammability accor. to UL 94: | |
| Inserts: | V0 |
| hoods/housings: | V2 |
| Connection range: | 9 – 16 mm<br>13 – 18 mm |
| Connection style: | crimp connection |
| Degree of protection: | IP 65 |
| Color: | inserts in gray RAL 7035<br>hoods/housings<br>in black RAL 9005 |
| Material: | Polyamide |

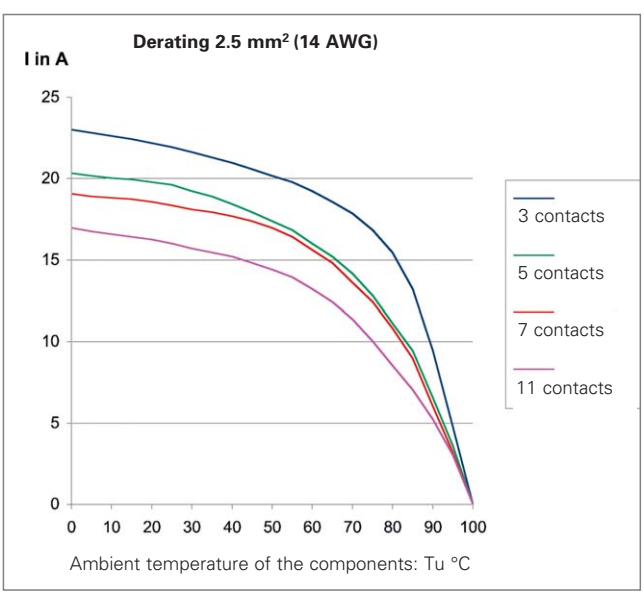

# Industrial multipole connectors
## 24pole

# revos SLIDE

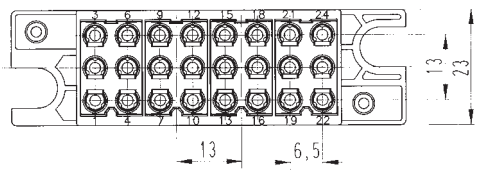


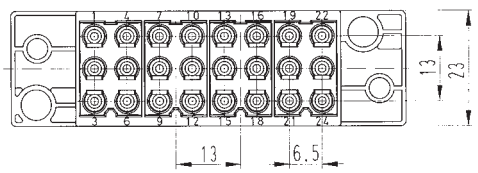


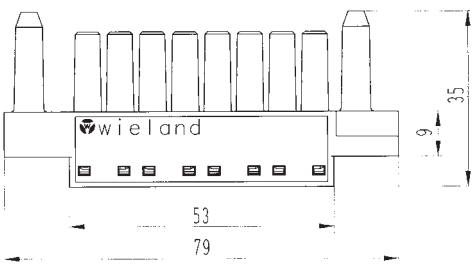


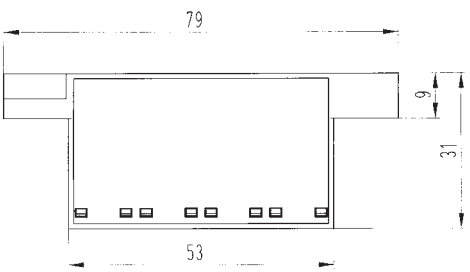


## 250 V 10 A IEC 61 984

| | Number of poles | Approvals | Stand. pack | Part no. |
|---|---|---|---|---|
| Female insert | 24pole | pending | 100 | 99.700.6905.5 |
| Male insert | 24pole | pending | 100 | 99.701.6905.5 |

# revos

## Contacts for crimp version

| | Ø mm² | Part no. | Stand. pack |
|---|---|---|---|
| | | silver-plated | |
| **Female contacts** | 1.5 mm²<br>16 AWG | 02.125.1121.0 | 100 |
| **Male contacts** | 1.5 mm²<br>16 AWG | 05.544.5621.0 | 100 |
| Crimping tool | | 95.101.0800.0 | 1 |
| Crimping die "B" | | 05.502.2100.0 | 1 |
| Contact positioner "3" | | 05.502.3300.0 | 1 |
| Extraction tool for the contacts | | 05.502.3500.0 | 1 |

Cut-out

Female connector

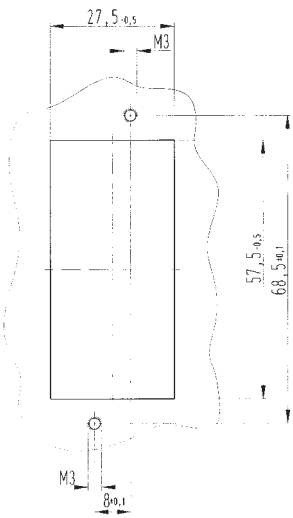


Male connector

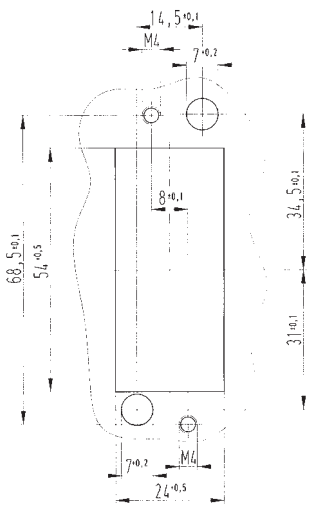


**Technical information:**

| | |
|---|---|
| Rated current: | 10 A |
| Rated voltage: | 250 V |
| Rated cross section: | 1.5 mm²<br>16 AWG |
| Pollution degree: | 3 |
| Rated peak voltage | 4 kV |
| Temperature range: | –20 °C to +80 °C |
| Flammability accor. to UL 94: | V0 50 (80) °C<br>see derating |
| Degree of protection: | IP 20 |
| Connection style: | crimp connection |
| Material: | Polyamide |
| Approvals: | UL/CSA pending |

**Multipole connectors 99.700.6905.0/99.701.6905.5**

**max. current 10 A**

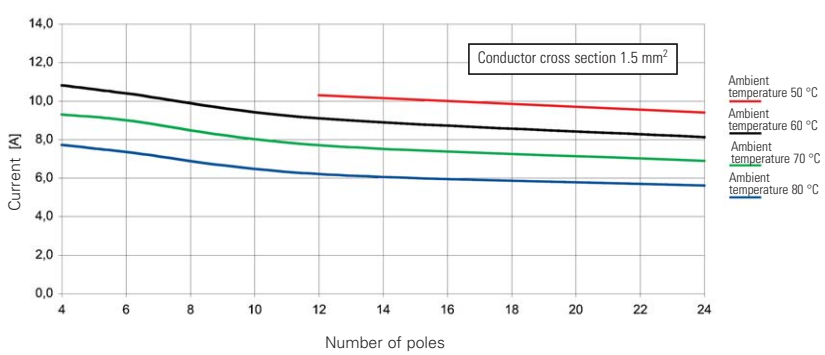


This curve does not apply for intermittent currents

# Industrial multipole connectors 6/10/16/24/48pole

**revos** Ex

**Technical information**

| | |
|---|---|
| ■ **Approvals** | BVS |
| ■ **Applicable standards** | IEC 61 984 |
| ■ **Contact inserts** | |
| Rated current | 16 A |
| Rated voltage | 90 V |
| Pole configurations | 6-, 10-, 16-, 24-, 48pole (2x24), + ground |
| Screw connection | 0.5 – 2.5 $mm^2$ / 20 – 12 AWG |
| Degree of pollution | 3 |
| Temperature range | –40 to +110 °C |
| ■ **Contacts** | |
| Material | copper alloy |
| Surface | tin-plated |
| ■ **Hoods and housings** | |
| Material | die cast aluminum alloy |
| Surface | light blue, silicon-free finish |
| Locking levers | zinc-plated steel |
| Gaskets | NBR |
| Temperature range | –40 to +110 °C |
| Degree of protection accord. to DIN EN 60 529 | IP 55 |

revos

# Industrial Multipole Connectors

# Industrial multipole connectors
## 6/10/16/24/48pole

**revos** Ex

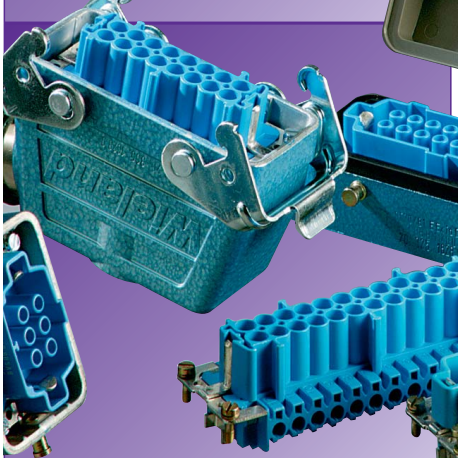

### System description

- ❒ For applications in mining, machine construction, control and switchgear building, especially for use in intrinsic electrical systems
- ❒ BVS-tested and approved
- ❒ Reliable connector elements for power and control current lines
- ❒ Outstanding feature:a robust die cast zinc housing, color blue
- ❒ Protection of the internal contact-inserts against mechanical and hazardous industrial influences
- ❒ According to EN 60 529, IEC 60 529, the interlocked hoods and housings provide the degree of protection IP 55 (dust ingress and jet water)

### Protective cover

- ❒ Hoods and housings with / without hinged protective cover

Cable to cable couplings

- ❒ low and high designs
- ❒ Locking with 1 lever on the broad side (6pole and 48pole)
- ❒ Locking with 2 levers on the narrow side (10, 16 and 24pole)

Female and male connector inserts:

- ❒ Insulating parts made from fiberglass reinforced Polyamide (technical information: see ***facts*** & DATA)

### Material

Housing:

- ❒ Hoods/housings: die cast zinc alloy, with hammer finish in blue

Housing:

- ❒ with open-bottom housing: cable entry at the bottom
- ❒ with closed-bottom housing: narrow-side cable entry
- ❒ Connector with open-bottom housing; housing with protective cover attached by hinged joint
- ❒ Connector with closed-bottom housing; housing with protective cover attached by hinged joint
- ❒ Connector with compression gland

### DQS certificates for all product families

- ❒ Quality standard as per DIN ISO 9001
- ❒ in Development, Production, Assembly
- ❒ Continued control of the quality standard by means of regular internal and external quality audits
- ❒ Compatible with certificates of other countries:
  - BSI Certificate, Great Britain
  - SQS Certificate, Switzerland
  - Aib-Vincotte Certificate, Belgium
  - ÖQS Certificate, Austria

# revos

❒ Combination with flat open-bottom housing in die cast zinc alloy

❒ Combination with high closed-bottom housing in die cast zinc alloy

❒ Combination with low open-bottom housing in die cast zinc alloy with protective cover

❒ Combination with high closed-bottom housing in die cast zinc alloy with protective cover

❒ Combination of 2 hoods as cable to cable coupling, with narrow-side locking levers, die cast zinc alloy

ZERTIFIZIERTES
DIN ISO 9001
QUALITÄTSSICHERUNGSSYSTEM
Reg.-Nr. 14 194-02

# Industrial multipole connectors
## Female/male inserts

revos Ex

## 90 V

Degree of protection: IP 55
**Multipole connectors for intrinsic systems EEx ia, color: blue**

| | | Rated current | Cross section | Approvals | Wire strip length | Stand. pack |
|---|---|---|---|---|---|---|
| **Screw connection** | Female insert | 16 A | 0.5 – 2.5 mm² 20 – 12 AWG | EExia | 7 mm | 10 |
| **Screw connection** | Male insert | 16 A | 0.5 – 2.5 mm² 20 – 12 AWG | EExia | 7 mm | 10 |

# revos

| 6pole + ground | 10pole + ground | 16pole + ground | 24pole + ground | 48pole + ground | |
|---|---|---|---|---|---|
| Part no. | Part no. | Part no. | Part no. | Part no. | |
| 72.300.0653.9 | 72.300.1053.9 | 72.300.1653.9 | 72.300.2453.9 | 72.300.4853.9 | |
| 72.310.0653.9 | 72.310.1053.9 | 72.310.1653.9 | 72.310.2453.9 | 72.310.4853.9 | |

# Modular industrial multipole connectors
# Hoods with single and double locking levers

**revos** Ex

**Version A**

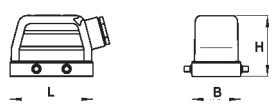


**Version C**

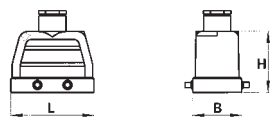


## 90 V

Degree of protection: IP 55
**Multipole connectors for intrinsic systems EEx ia**

| Number of poles | Thread | Cable gland type | Dimensions in mm | L | W | H | Stand. pack |
|---|---|---|---|---|---|---|---|
| Size **6**<br>for multipole connectors<br>**6pole + ground** | Pg 13.5 | 7 with Pg thread<br>9 with strain relief | | 60 | 43 | 47.5 | 1 |
| | Pg 16 | 7 with Pg thread<br>9 with strain relief | | 60 | 43 | 47.5 | 1 |
| Size **10**<br>for multipole connectors<br>**10pole + ground** | Pg 16 | 7 with Pg thread<br>9 with strain relief | | 73 | 43 | 53 | 1 |
| | Pg 21 | 7 with Pg thread<br>9 with strain relief | | 73 | 43 | 53 | 1 |
| Size **16**<br>for multipole connectors<br>**16pole + ground** | Pg 21 | 7 with Pg thread<br>9 with strain relief | | 93.5 | 43 | 60 | 1 |
| | Pg 29 | 7 with Pg thread<br>9 with strain relief | | 93.5 | 43 | 60 | 1 |
| Size **24**<br>for multipole connectors<br>**24pole + ground** | Pg 21 | 7 with Pg thread<br>9 with strain relief | | 120 | 43 | 70 | 1 |
| | Pg 29 | 7 with Pg thread<br>9 with strain relief | | 120 | 43 | 70 | 1 |
| Size **48**<br>for multipole connectors<br>**48pole + ground** | Pg 29 | 7 with Pg thread<br>9 with strain relief | | 132 | 90 | 107 | 1 |
| | Pg 32 | 7 with Pg thread<br>9 with strain relief | | 132 | 90 | 107 | 1 |

# revos

**Version D**

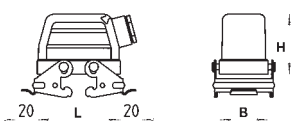


**Version F**

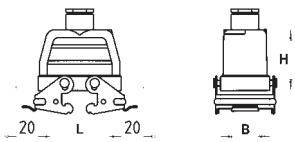


| Hood with cable gland<br><br>Version A | Hood with cable gland<br><br>Version C | Hood with cable gland and locking levers<br><br>Version D | Hood with cable gland and locking levers<br><br>Version F | |
|---|---|---|---|---|
| | | | | |
| Part no. | Part no. | Part no. | Part no. | |
| 70.350.0628.7<br>70.360.0628.9 | 70.352.0628.7<br>70.362.0628.9 | | | |
| 70.363.0628.9 | 70.354.0628.7<br>70.364.0628.9 | | | |
| 70.350.1028.7<br>70.360.1028.9 | 70.352.1028.7<br>70.362.1028.9 | 70.355.1028.7<br>70.365.1028.9 | 70.367.1028.9 | |
| 70.363.1028.9 | 70.354.1028.7<br>70.364.1028.9 | 70.368.1028.9 | 70.369.1028.9 | |
| 70.350.1628.7<br>70.360.1628.9 | 70.352.1628.7<br>70.362.1628.9 | 70.355.1628.7<br>70.365.1628.9 | 70.367.1628.9 | |
| 70.363.1628.9 | 70.354.1628.7<br>70.364.1628.9 | 70.368.1628.9 | 70.359.1628.7<br>70.369.1628.9 | |
| 70.350.2428.7<br>70.360.2428.9 | | 70.365.2428.9 | 70.367.2428.9 | |
| 70.363.2428.9 | 70.354.2428.7 | 70.358.2428.7<br>70.368.2428.9 | | |
| 70.350.4828.7<br>70.360.4828.9 | 70.352.4828.7<br>70.362.4828.9 | | | |
| 70.353.4828.7 | 70.354.4828.7<br>70.364.4828.9 | | | |

# Modular industrial multipole connectors
# Housings with single and double locking levers

**revos** Ex

**Version a**

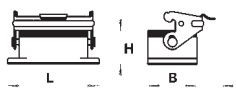


**Version b**

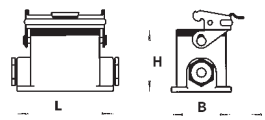


**Version c**

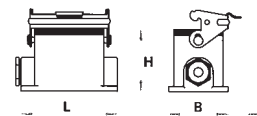


**Version d**

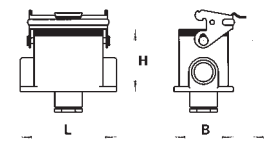


**Version i**

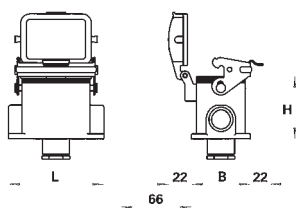


Open-bottom housing

Version a

Closed-bottom housing with two narrow-side entry cable glands

Version b

Closed bottom housing with one narrow-side entry cable gland on the left

Version c

## 90 V

Degree of protection: IP 55
**Multipole connectors for intrinsic systems EEx ia**

| Number of poles | Thread | Cable gland type | L | W | H | Stand. pack | Part no. | Part no. | Part no. |
|---|---|---|---|---|---|---|---|---|---|
| Housing size **6** for multipole connectors **6pole + ground** | | 9 with cable gland | 80 | 43 | 28 | 1 | 70.320.0628.9 | | |
| | Pg 16 | | 84 | 52 | 54.5 | 1 | | 70.330.0628.9 | 70.331.0628.9 |
| Housing size **10** for multipole connectors **10pole + ground** | | 9 with cable gland | 93 | 43 | 28 | 1 | 70.320.1028.9 | | |
| | Pg 16 | | 94 | 52 | 54.5 | 1 | | 70.330.1028.9 | 70.331.1028.9 |
| Housing size **16** for multipole connectors **16pole + ground** | | | 113 | 43 | 28 | 1 | 70.320.1628.9 | | |
| Housing size **24** for multipole connectors **24pole + ground** | | 9 with cable gland | 140 | 43 | 44 | 1 | 70.320.2428.9 | | |
| | Pg 21 | | 144 | 52 | 56.5 | 1 | | 70.330.2428.9 | 70.331.2428.9 |
| Housing size **48** for multipole connectors **48pole + ground** | | | 165 | 90 | 44 | 1 | 70.320.4828.9 | | |
| | Pg 29 | 9 with cable gland | 146 | 120 | 99 | 1 | | | 70.331.4828.9 |
| | Pg 36 | 9 with strain relief | 146 | 120 | 99 | 1 | | | |

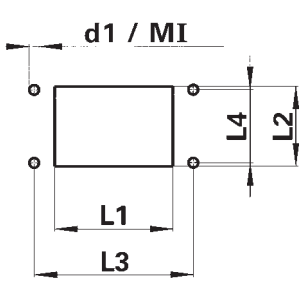


Mounting dimensions and cut-outs for open-bottom housings

| Housing size | Cut-out (mm) | | Mounting dimensions (mm) | | | |
|---|---|---|---|---|---|---|
| | L1 | L2 | L3 | L4 | d1 (mm) | MI |
| **6** | 52 | 35 | 70 | 32 | 4.3 | M 4 |
| **10** | 65 | 35 | 83 | 32 | 4.3 | M 4 |
| **16** | 85.5 | 35 | 103 | 32 | 4.3 | M 4 |
| **24** | 112 | 35 | 130 | 32 | 4.3 | M 4 |
| **48** | 117 | 81 | 148 | 70 | 6.4 | M 6 |

# revos

**Version e**

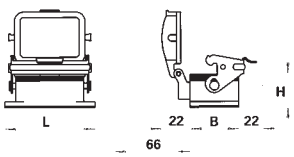


**Version f**

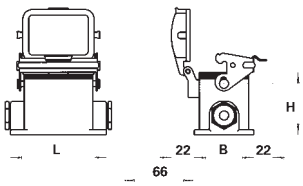


**Version g**

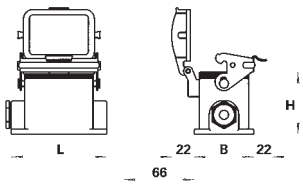


**Version h**

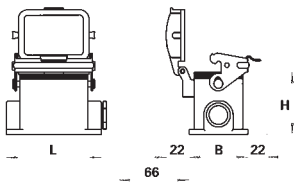


| Closed-bottom housing with bottom entry cable gland<br>Version d | Open-bottom housing with protective cover<br>Version e | Closed-bottom housing with two narrow-side entry cable glands and protective cover<br>Version f | Closed bottom housing with one narrow-side entry cable gland on the left and protective cover<br>Version g | Closed bottom housing with one narrow-side entry cable gland on the right and protective cover<br>Version h | Closed bottom housing with bottom entry cable gland and protective cover<br>Version i |
|---|---|---|---|---|---|
| | | | | | |
| Part no. | Part no. | Part no. | Part no. | Part no. | Part no. |
| 70.333.0628.9 | 70.325.0628.9 | 70.340.0628.9 | 70.341.0628.9 | 70.342.0628.9 | 70.343.0628.9 |
| 70.333.1028.9 | 70.325.1028.9 | 70.340.1028.9 | 70.341.1028.9 | 70.342.1028.9 | 70.343.1028.9 |
| | 70.325.1628.9 | | | | |
| 70.333.2428.9 | 70.325.2428.9 | 70.340.2428.9 | 70.341.2428.9 | 70.342.2428.9 | 70.343.2428.9 |
| | 70.325.4828.9 | | 70.341.4828.9 | | |
| | | | 70.344.4828.9 | | |

| Housing size | L5 (mm) | L6 (mm) | d2 (mm) | MII |
|---|---|---|---|---|
| **6** | 70 | 40 | 5.5 | M 5 |
| **10** | 82 | 40 | 5.5 | M 5 |
| **16** | 105 | 45 | 5.5 | M 5 |
| **24** | 132 | 45 | 5.5 | M 5 |
| **48** | 111 | 106 | 6.5 | M 6 |

Mounting dimensions for closed-bottom housings

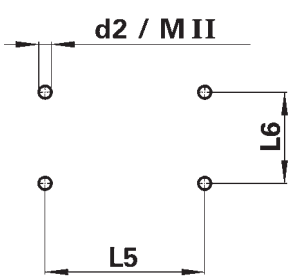

# Special combinations for cable to cable couplings

**revos** Ex

| | | Female insert | Male insert | Hood with strain relief, with locking levers and gasket<br>Pos. 1 | Hood with strain relief without locking levers<br>Pos. 2 |
|---|---|---|---|---|---|
| | | | | | |
| Number of poles | Cable entry size | Part no. | Part no. | Part no. | Part no. |
| 6 + ground | Pg 13.5 | 72.300.0653.9 | 72.310.0653.9 | 99.701.3329.7 | 70.362.0628.9 |
| 6 + ground | Pg 16 | 72.300.0653.9 | 72.310.0653.9 | 99.721.3329.7 | 70.364.0628.9 |
| 10 + ground | Pg 16 | 72.300.1053.9 | 72.310.1053.9 | 99.707.3329.7 | 70.362.1028.9 |
| 10 + ground | Pg 21 | 72.300.1053.9 | 72.310.1053.9 | 99.727.3329.7 | 70.364.1028.9 |
| 16 + ground | Pg 21 | 72.300.1653.9 | 72.310.1653.9 | 99.703.3329.7 | 70.362.1628.9 |
| 16 + ground | Pg 29 | 72.300.1653.9 | 72.310.1653.9 | 99.723.3329.7 | 70.364.1628.9 |
| 24 + ground | Pg 29 | 72.300.2453.9 | 72.310.2453.9 | 99.705.3329.7 | 70.362.2428.9 |
| 48 + ground | Pg 29 | 72.300.4853.9 | 72.310.4853.9 | 70.377.4828.9 | 70.375.4828.9 |

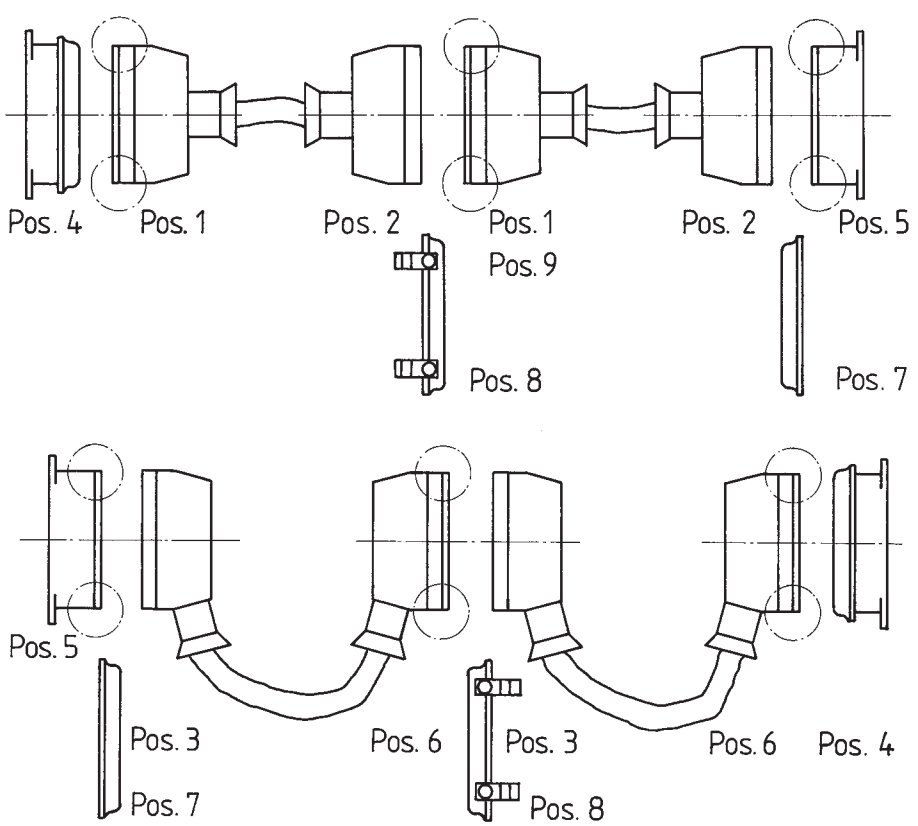


## Mounting examples

# revos

| Hood with strain relief without locking levers<br>Pos. 3 | Open-bottom housing with protective cover gasket in the cover<br>Pos. 4 | Open-bottom housing with locking levers, with gasket<br>Pos. 5 | Hood with strain relief with locking levers and gasket<br>Pos. 6 | Hood with Pg thread only, with locking levers, with gasket<br>Pos. 9<br>(do not combine with pos. 4) | Hood with Pg thread only, without locking levers<br>Pos. 2 |
|---|---|---|---|---|---|
| | | | | | |
| Part no. | Part no. | Part no. | Part no. | Part no. | Part no. |
| 70.360.0628.9 | 99.700.3329.7 | 70.320.0628.9 | 99.710.3329.7 | 70.372.0628.7 | 70.352.0628.7 |
| 70.363.0628.9 | 99.700.3329.7 | 70.320.0628.9 | | – | 70.354.0628.7 |
| 70.360.1028.9 | 99.706.3329.7 | 70.320.1028.9 | 99.711.3329.7 | 70.372.1028.7 | 70.352.1028.7 |
| 70.363.1028.9 | 99.706.3329.7 | 70.320.1028.9 | – | – | 70.354.1028.7 |
| 70.360.1628.9 | 99.702.3329.7 | 70.320.1628.9 | 99.713.3329.7 | 70.372.1628.7 | 70.352.1628.7 |
| 70.363.1628.9 | 99.702.3329.7 | 70.320.1628.9 | – | – | 70.354.1628.7 |
| 70.360.2428.9 | 99.704.3329.7 | 70.320.2428.9 | 99.716.3329.7 | 70.372.2428.7 | 70.352.2428.7 |
| 70.360.4828.9 | | 70.320.4828.9 | | 70.372.4828.7 | 70.352.4828.7 |

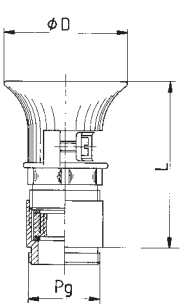


❒ Strain relief screw with locking ring

| Part no. | Cable entry sizes | | Ø (mm) |
|---|---|---|---|
| | L | Pg | Ø D |
| Z5.509.0529.0 | 44.6 | 13.5 | 35 |
| Z5.508.8129.0 | 56.6 | 16 | 35 |
| Z5.508.8229.0 | 63.1 | 21 | 35 |
| Z5.508.8329.0 | 66.6 | 29 | 35 |
| Z5.509.0829.0 | 89.6 | 36 | 81 |

# Industrial multipole connectors
## Accessories

revos

For hoods with cable glands or flared cable entries and strain reliefs we provide locking rings in the size of the various cable entries to lock the pressure screw.

Locking ring

After the pressure screw is tightened, the locking ring is slid over the hexagon head of the pressure screw and is fixed to the compression gland by means of a pan head screw. The pressure screw is now protected against accidental loosening.

If several connectors of the same pole configuration have to be mounted adjacent to each other, coding fixtures prevent them from being mismated. Only matching female and male parts can be connected. (4 coding options).
Coding pins enable six unique combinations.

Coding fixtures in combination with special coding pins provide 24 codings according to the following plan (part no. **Z5.593.4053**): (not applicable for the versions 72.3 and 72.7)

For part no.
see page 788

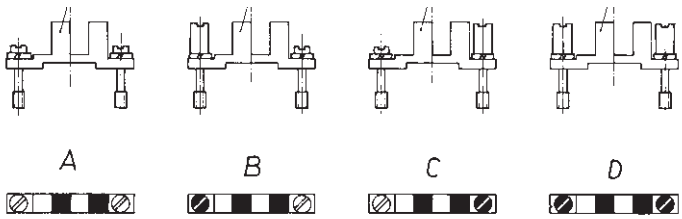


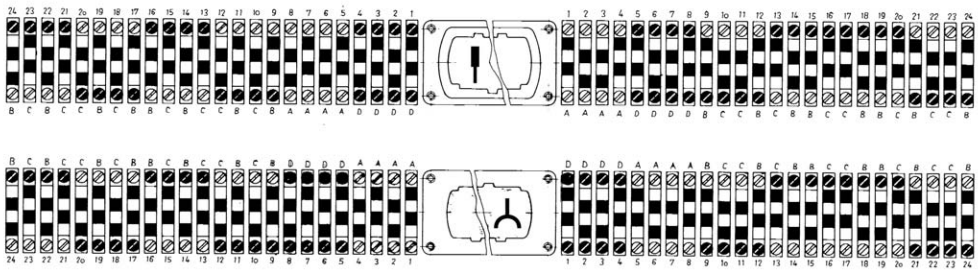

# revos

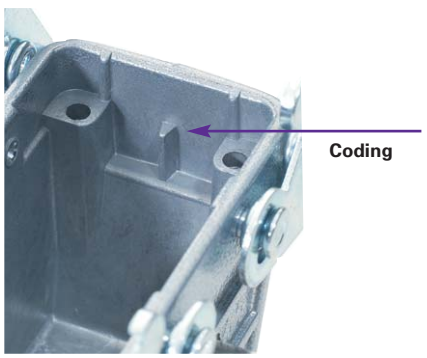


The hoods and housings for 400 V inserts are coded,
so that the female and male inserts for the series of 690/400 V and 690 V
cannot be mounted to them.

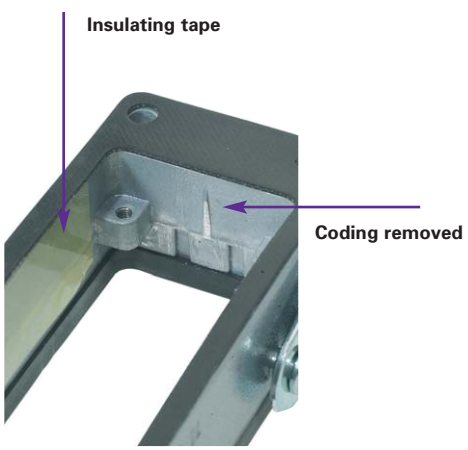


The coding ribs of the hoods and housings of series 690/400 V and 690 V
were removed. Additionally, two insulating tapes are attached inside these hoods
and housings.

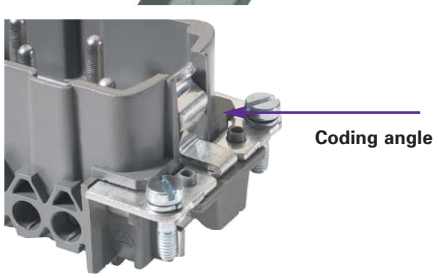


The female and male inserts of series 690/400 V and 690 V are equipped with coding
angles. They prevent that the female and male inserts of this series are mounted to the
hoods and housings for 400 V.

The 3pole, 6pole and 10pole inserts of series 690/400 V have a coding fixture which
prevents that they are plugged together with 400 V male inserts.

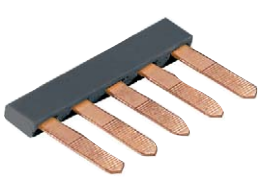

Insulated jumper bar for multipole adapters (see page 781)

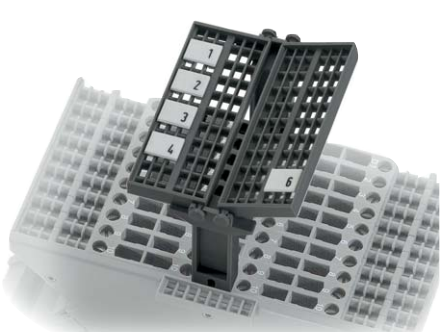


Marking tag carrier with 6 digits for open-bottom housings (see page 790)
(without marking tags)

# Accessories for multipole connectors and multipole adapters
## Metric cable threads

revos

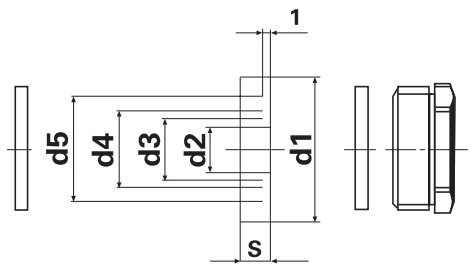


Cable gland nickel-plated brass, with circular compression gland,
IP 54 degree of protection

| Metric thread | d1 | d2 | >Ø< in mm | d3 | >Ø< in mm | d4 | >Ø< in mm | d5 | >Ø< in mm | Part no. | Stand. pack |
|---|---|---|---|---|---|---|---|---|---|---|---|
| M 16 | 13.8 | 3 | 2.0 – 4.5 | 6 | 5.0 – 7.5 | 9 | 8.0 – 10.5 | – | – | Z5.507.2121.0 | 10 |
| M 20 | 17.6 | 4 | 3.0 – 5.5 | 7 | 6.0 – 8.5 | 10 | 9.0 – 11.5 | 13 | 12.0 – 14.5 | Z5.507.2221.0 | 10 |
| M 25 | 22.6 | 8.5 | 7.5 – 10.0 | 11.5 | 10.5 – 13.0 | 14.5 | 13.5 – 16.0 | 17.5 | 16.5 – 19.0 | Z5.507.2321.0 | 10 |
| M 32 | 29.6 | 16 | 15.0 – 17.5 | 19 | 18.0 – 20.5 | 22 | 21.0 – 23.5 | 25 | 24.0 – 26.5 | Z5.507.2421.0 | 10 |

Cable gland nickel-plated brass, with internal strain relief and gasket on the connection thread
IP 68 degree of protection

| Metric thread | >Ø< in mm | mm | Thread length in mm | Part no. | Stand. pack |
|---|---|---|---|---|---|
| M 20 x 1.5 | 8.0 – 13.0 | 22 | 6 | Z5.507.1321.0 | 10 |
| M 25 x 1.5 | 11.0 – 18.0 | 27 | 7 | Z5.507.1521.0 | 10 |
| M 32 x 1.5 | 15.0 – 21.0 | 34 | 8 | Z5.507.1721.0 | 10 |
| M 40 x 1.5 | 19.0 – 27.0 | 44 | 8 | Z5.507.1921.0 | 10 |

Hoods and housings with a cable gland from brass and IP 68 degree of protection can be preassembled upon request and for minimum order quantities of 50 pieces.

Plastic cable gland Polyamide, gray (RAL 7035), with strain relief
IP 68 degree of protection

| Metric thread | >Ø< in mm | mm | Thread length in mm | Part no. | Stand. pack |
|---|---|---|---|---|---|
| M 20 x 1.5 | 6.0 – 12.0 | 24 | 9 | Z5.507.1353.0 | 10 |
| M 25 x 1.5 | 7.0 – 16.0 | 28 | 11 | Z5.507.1553.0 | 10 |
| M 32 x 1.5 | 10.0 – 21.0 | 36 | 11 | Z5.507.1753.0 | 10 |
| M 40 x 1.5 | 16.0 – 28.0 | 46 | 11 | Z5.507.1953.0 | 10 |

For the use of plastic glands, the housings of size 6 must have a compression gland.

# revos

Cable gland nickel-plated brass, with hexagon port on the compression gland, pressure screw with strain relief and protection against bending, IP54 degree of protection

| Metric thread | >Øk< in mm | gland mm | Thread length in mm | Part no. | Stand. pack |
|---|---|---|---|---|---|
| M 16 x 1.5 | 6.0 – 9.0 | 18 | 5 | Z5.507.9521.0 | 10 |
| M 20 x 1.5 | 9.0 – 13.5 | 22 | 6 | Z5.507.9621.0 | 10 |
| M 25 x 1.5 | 14.0 – 20.0 | 30 | 7 | Z5.507.9721.0 | 10 |
| M 32 x 1.5 | 19.0 – 29.0 | 39 | 8 | Z5.507.9821.0 | 10 |

EMC cable gland nickel-plated brass, for shielded cables, with internal strain relief, consistently insulated by a gasket on the connection thread, IP 68 degree of protection

| Metric thread | >Øk< in mm | mm | Thread length in mm | Part no. | Stand. pack |
|---|---|---|---|---|---|
| M 20 x 1.5 | 8.0 – 13.0 | 22 | 6 | Z5.507.4821.0 | 10 |
| M 25 x 1.5 | 11.0 – 18.0 | 30 | 7 | Z5.507.5021.0 | 10 |
| M 32 x 1.5 | 15.0 – 21.0 | 34 | 8 | Z5.507.5221.0 | 10 |

Cable gland nickel-plated brass, with hexagon port on the compression gland, pressure screw with centric strain relief and protection against bending, with universal gasket

| Metric thread | >Øk< in mm | mm | Thread length in mm | Part no. | Stand. pack |
|---|---|---|---|---|---|
| M 20 x 1.5 | 8.5 – 14.0 | 24 | 6 | Z5.507.5821.0 | 10 |
| M 25 x 1.5 | 12.0 – 20.0 | 34 | 7 | Z5.507.6021.0 | 10 |
| M 32 x 1.5 | 18.0 – 28.0 | 42 | 8 | Z5.507.6221.0 | 10 |
| M 40 x 1.5 | 24.0 – 34.0 | 52 | 8 | Z5.507.6421.0 | 10 |

Hoods and housings with a cable gland from brass and IP 68 degree of protection can be preassembled upon request and for minimum order quantities of 50 pieces.

# Accessories for multipole connectors and multipole adapters

revos

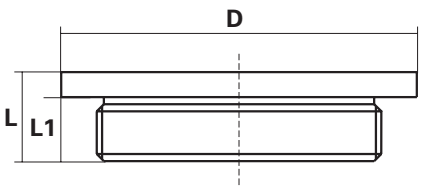

**Reduction piece, nickel-plated brass**

| External thread | Internal thread | D | L1 | L | Part no. | Stand. pack |
|---|---|---|---|---|---|---|
| M 20 x 1.5 | M 16 x 1.5 | 22 | 6 | 9 | 05.507.9021.0 | 10 |
| M 25 x 1.5 | M 20 x 1.5 | 27 | 7 | 10 | 05.507.9121.0 | 10 |
| M 32 x 1.5 | M 25 x 1.5 | 34 | 8 | 11 | 05.507.9221.0 | 10 |
| M 40 x 1.5 | M 32 x 1.5 | 43 | 8 | 11.5 | 05.507.9321.0 | 10 |

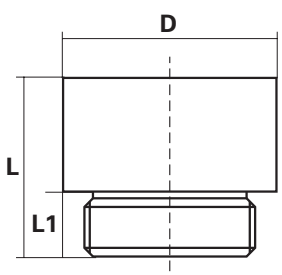

**Extension piece, nickel-plated brass**

| External thread | Internal thread | D | L1 | L | Part no. | Stand. pack |
|---|---|---|---|---|---|---|
| M 16 x 1.5 | M 20 x 1.5 | 22 | 5 | 17,5 | 05.507.8621.0 | 10 |
| M 20 x 1.5 | M 25 x 1.5 | 27 | 6 | 20 | 05.507.8721.0 | 10 |
| M 25 x 1.5 | M 32 x 1.5 | 34 | 7 | 22,5 | 05.507.8821.0 | 10 |
| M 32 x 1.5 | M 40 x 1.5 | 42 | 8 | 24,5 | 05.507.8921.0 | 10 |

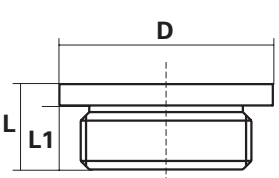

**Adapter for PG-metric conversion, nickel-plated brass**

| External thread | Internal thread | D | L1 | L | Part no. | Stand. pack |
|---|---|---|---|---|---|---|
| Pg 13.5 | M 20 x 1.5 | 26 | 6.5 | 19 | 05.507.7621.0 | 10 |
| Pg 16 | M 20 x 1.5 | 24 | 6.5 | 9.5 | 05.507.7721.0 | 10 |
| Pg 21 | M 25 x 1.5 | 30 | 7 | 10 | 05.507.7821.0 | 10 |

# revos

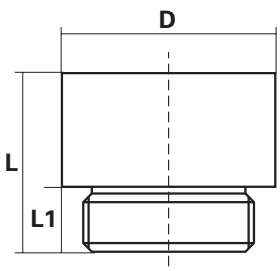

**Adapter for metric-PG conversion, nickel-plated brass**

| External thread | Internal thread | D | L1 | L | Part no. | Stand. pack |
|---|---|---|---|---|---|---|
| M 20 x 1.5 | Pg 13.5 | 22 | 6 | 18.5 | 05.507.8121.0 | 10 |
| M 20 x 1.5 | Pg 16 | 24 | 6 | 19.5 | 05.507.8221.0 | 10 |
| M 25 x 1.5 | Pg 21 | 30 | 7 | 22 | 05.507.8321.0 | 10 |
| M 32 x 1.5 | Pg 29 | 39 | 8 | 24.5 | 05.507.8421.0 | 10 |

**Adapter metric – NPT: Electroless nickel-plated aluminium**

| | | | | | |
|---|---|---|---|---|---|
| M 20 x 1.5 – 1/2" NPT | 24 | 7 | 25 | M20N02MA | 10 |
| M 20 x 1.5 – 3/4" NPT | 30 | 7 | 25 | M20N04MA | 10 |
| M 25 x 1.5 – 1/2" NPT | 27 | 7 | 21 | M25N02MA | 10 |
| M 25 x 1.5 – 3/4" NPT | 30 | 7 | 25 | M25N04MA | 10 |
| M 25 x 1.5 – 1" NPT | 36 | 7 | 26.5 | M25N06MA | 10 |
| M 32 x 1.5 – 1" NPT | 36 | 7 | 26.5 | M32N06MA | 10 |

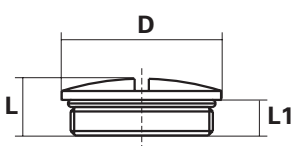

**Blind piece,**
metric, nickel-plated brass, with gasket from Perbunan

| Metric thread | D | L1 | L | Part no. | Stand. pack |
|---|---|---|---|---|---|
| M 20 x 1.5 | 22 | 6.5 | 9.5 | 05.507.4021.0 | 10 |
| M 25 x 1.5 | 28 | 7 | 11 | 05.507.4121.0 | 10 |
| M 32 x 1.5 | 35 | 8 | 12 | 05.507.4221.0 | 10 |
| M 40 x 1.5 | 44 | 8.5 | 13 | 05.507.4321.0 | 10 |

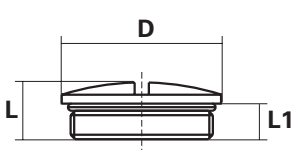

**Blind piece,**
metric, fibreglass reinforced Polyamide, gray

| Metric thread | D | L1 | L | Part no. | Stand. pack |
|---|---|---|---|---|---|
| M 20 x 1.5 | 24 | 6 | 9 | 05.507.4053.0 | 10 |
| M 25 x 1.5 | 30 | 7 | 10.5 | 05.507.4153.0 | 10 |
| M 32 x 1.5 | 38 | 8 | 12 | 05.507.4253.0 | 10 |
| M 40 x 1.5 | 48 | 9 | 13 | 05.507.4353.0 | 10 |

# Accessories for multipole connectors and multipole adapters
## Protective covers

revos

| for the housings | 73.3xx.xxxx.x | 70.3xx.xxxx.x | 72.3xx.xxxx.x | Part no. | Stand. pack |
|---|---|---|---|---|---|
| | | 6pole | 6pole | 07.409.7056.0 | 10 |
| | | 10pole | 10pole | 07.409.7156.0 | 10 |
| | 40pole | 16pole | 16pole | 07.409.7256.0 | 10 |
| | 64pole | 24pole | 24pole | 07.409.7356.0 | 10 |
| Protective Polyamide covers for hoods and housings with locking levers | | | | | |
| with tether cord | 40pole | 16pole | 16pole | Z7.409.8856.0 | 10 |
| | 64pole | 24pole | 24pole | Z7.409.8956.0 | |
| with tether cord and loop | 40pole | 10pole | 10pole | Z7.416.1656.0 | 10 |
| | 64pole | 16pole | 16pole | Z7.416.1756.0 | 10 |
| | | 24pole | 24pole | Z7.416.1856.0 | 10 |
| | | 6pole | 6pole | Z7.409.7056.0 | 10 |
| | | 10pole | 10pole | Z7.409.7156.0 | 10 |
| | 40pole | 16pole | 16pole | Z7.409.7256.0 | 10 |
| | 64pole | 24pole | 24pole | Z7.409.7356.0 | 10 |
| Protective cover from Polyamide with catch spring from spring steel, galvanically tin-plated for hoods and housings without locking lever | | | | | |
| 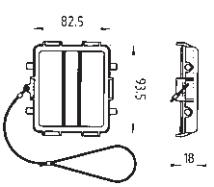  | | | | | |
| Protective cover for 32pole housing | | | 32pole | Z7.419.6228.0 | 10 |
| 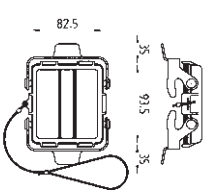  | | | | | |
| Protective cover for 32pole housing with locking lever | | | 32pole | Z7.419.6128.0 | 10 |
| | | | | | |
| Cover with lockingbolts for housings and hoods with locking levers for ***revos*** MINI with gaskets for female inserts | | | Plastic | 07.417.6853.0 | |
| | | | Metal | 07.417.6829.0 | |
| | | | | | |
| Cover with lockingbolts for housings and hoods with locking levers for ***revos*** MINI without gaskets for female inserts | | | Plastic | 07.417.6753.0 | |
| | | | Metal | 07.417.6729.0 | |

# revos

| | Number of poles | Part no. | Stand. pack |
|---|---|---|---|
| 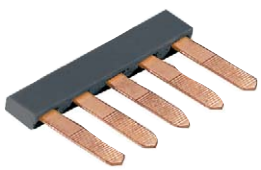 Insulated jumper bar for multipole adapters of series xx.xxx.xxxx.3 and xx.xxx.xxxx.4 | 2pole | Z7.256.0227.0 | 10 |
| | 3pole | Z7.256.0327.0 | 10 |
| | 4pole | Z7.256.0427.0 | 10 |
| | 5pole | Z7.256.0527.0 | 10 |
| | 6pole | Z7.256.0627.0 | 10 |
| | 7pole | Z7.256.0727.0 | 10 |
| | 8pole | Z7.256.0827.0 | 10 |
| | 9pole | Z7.256.0927.0 | 10 |
| | 10pole | Z7.256.1027.0 | 10 |
| | 11pole | Z7.256.1127.0 | 10 |
| | 12pole | Z7.256.1227.0 | 10 |
| Insulated jumper bar for high-density multipole adapters | 2pole | Z7.258.1225.0 | 10 |
| | 3pole | Z7.258.1325.0 | 10 |
| | 4pole | Z7.258.1425.0 | 10 |
| | 5pole | Z7.258.1525.0 | 10 |
| | 6pole | Z7.258.1625.0 | 10 |
| | 7pole | Z7.258.1725.0 | 10 |
| | 8pole | Z7.258.1825.0 | 10 |
| | 9pole | Z7.258.1925.0 | 10 |
| | 10pole | Z7.258.2025.0 | 10 |
| Marking tag carrier for housings with 6 digits (without marking tags) | | 04.242.4453.0 | 250 |
| Marking tag carrier complete with carrier (without marking tags) | 40pole | Z4.242.3753.0 | 10 |
| | 64pole | Z4.242.4053.0 | 10 |
| Marking tag carrier for hoods (without marking tags) to be driven in with a rubber mallet into the space on top of the hood | | 04.242.3853.0 | 10 |

# Accessories
# Mounting frames for connector inserts

revos

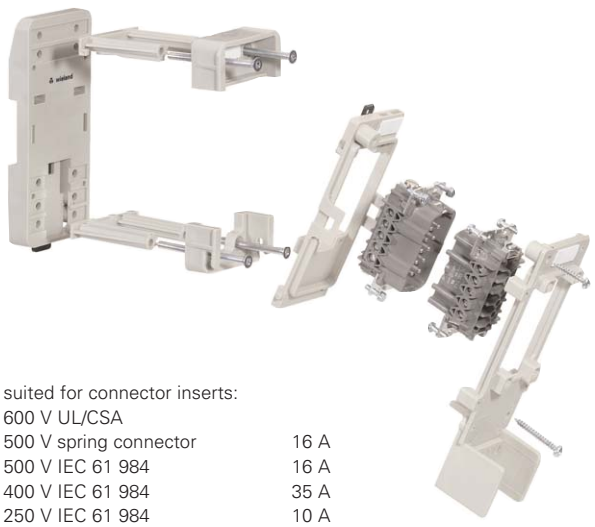

suited for connector inserts:

| | |
|---|---|
| 600 V UL/CSA | |
| 500 V spring connector | 16 A |
| 500 V IEC 61 984 | 16 A |
| 400 V IEC 61 984 | 35 A |
| 250 V IEC 61 984 | 10 A |

| | | Length | Part no. | Stand. pack |
|---|---|---|---|---|
| **Size 6** | Mounting frame with strain relief | 125 | Z5.574.0653.0 | 1 |
| **Size 10** | Mounting frame with strain relief | 125 | Z5.574.1053.0 | 1 |
| **Size 16** | Mounting frame with strain relief | 125 | Z5.574.1653.0 | 1 |
| **Size 24** | Mounting frame with strain relief | 150 | Z5.574.2453.0 | 1 |
| **Size 2 x 6** | Mounting frame with strain relief | 150 | Z5.574.1253.0 | 1 |
| **Sizes 6/10/16**<br>**Size 24** | Mounting frame with base plate andfixing bolts for open-bottom housings | 125 | Z5.574.0053.0<br>Z5.574.0153.0 | 1<br>1 |

# revos

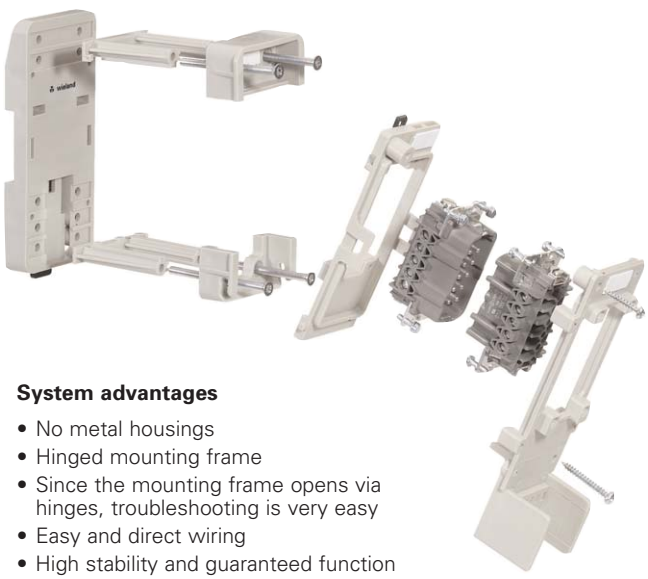

**System advantages**

- No metal housings
- Hinged mounting frame
- Since the mounting frame opens via hinges, troubleshooting is very easy
- Easy and direct wiring
- High stability and guaranteed function
- Degree of protection provided by the control cabinet
- Rewiring without disconnecting

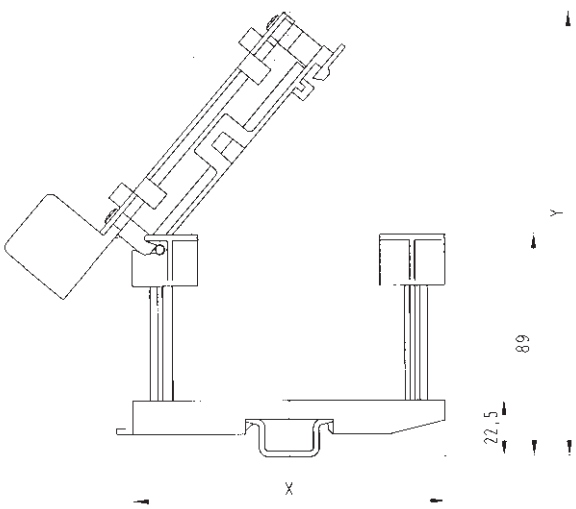


– Mounts to rail 35 x 15
– Swivels by 80° when connected
– Swivels by 120° when disconnected

Mounting frame with base plate and fixing bolts for open housings

# Accessories for multipole connectors and multipole adapters
## Cover plates and reduction plates

revos

| | Housing size | Number of poles | Part no. | Stand. pack |
|---|---|---|---|---|
| **Cover plates** | 6 | | 07.416.6853.0 | 10 |
| | 10 | | 07.416.6953.0 | 10 |
| | 16 | | 07.416.7053.0 | 10 |
| | 24 | | 07.416.7153.0 | 10 |

Cover plates to close prefabricated cut-outs in bulkhead walls of control cabinets

| | |
|---|---|
| Material | Polyamide, fiberglass reinforced |
| Color | RAL 7032 |
| Degr. of prot. | IP 65 |

| | | | | |
|---|---|---|---|---|
| **Reduction plates** | 24/ 6 | | 07.416.6353.0 | 10 |
| | 24/10 | | 07.416.6453.0 | 10 |
| | 24/16 | | 07.416.6553.0 | 10 |

Reduction plates to reduce prefabricated cut-outs of size 24 in bulkhead walls of control cabinets

| | |
|---|---|
| Material | Polyamide, fiberglass reinforced |
| Color | RAL 7032 |
| Degree of prot. | IP 65 |

# Definition for multipole adapters
# Ground connection

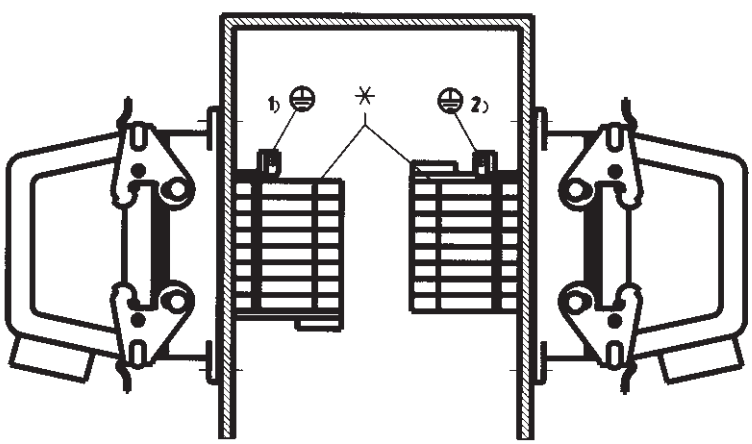


* Start of the markings 1 through ....
1 Multipole adapter in the version: ground connection left
2 Multipole adapter in the version: ground connection right

# Coding options with coding pins

revos

**The coding pins of version A can be used for:**

❒ Screw inserts with part no.:
70.2XX.XXXX.X
70.3XX.XXXX.X
70.4XX.XXXX.X
72.2XX.XXXX.X
72.3XX.XXXX.X

❒ Crimping inserts with part no.:
70.7XX.XXXX.X
72.7XX.XXXX.X
73.7XX.XXXX.X

❒ Spring clamp inserts with part no.:
70.5XX.XXXX.X

❒ Multipole adapters (mounting to the front) with part no.:
70.0XX.XXXX.X
70.1XX.XXXX.X
72.0XX.XXXX.X
72.1XX.XXXX.X
73.9XX.XXXX.X

Codings are possible even for combinations of screw and crimping inserts, and multipole adapters.

**The coding pins of version B can be used for:**

❒ Combinations of screw, crimping and spring clamp inserts, and multipole adapters, combined with multipole adapters (mounting to the rear of the housings) with
part no.: 70.9XX.XXXX.X
72.9XX.XXXX.X
73.1XX.XXXX.X

**1) Six coding options with coding pins**

Coding pins

| | | |
|---|---|---|
| Order no. for version A: | 05.592.0621.0 | 100 |
| | 05.513.4212.0 | 100 |

The use of coding pins enables six combinations for 3pole, 6pole, 10pole, 16pole and 24pole multipole connectors

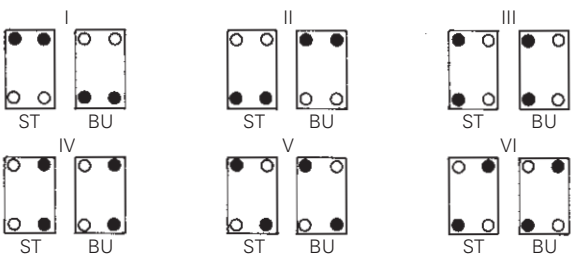


and six combinations for 20, 26, 32 and 48pole multipole connectors

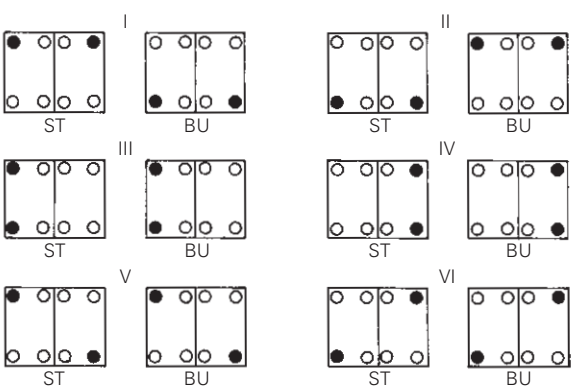


● Coding pins
○ Fixing screws

ST = male connector part
BU = female connector part

**2) 72) Coding options with coding pins**

Part no. for version **A:**

| | | |
|---|---|---|
| ● | Coding bolts | 05.576.6912.0* |
| • | Coding pin | 05.576.6612.0* |
| ○ | Female coding piece | 05.576.6712.0* |

Part no. for version **B:**

| | | |
|---|---|---|
| ● | Coding bolts | 05.576.8512.0 |
| • | Coding pin | 05.576.8312.0 |
| ○ | Female coding piece | 05.576.8412.0 |

*) for 15pole or 25pole connectors of series 73.7... we provide only16 different codings, as the coding bolts cannot be used.

**Coding**

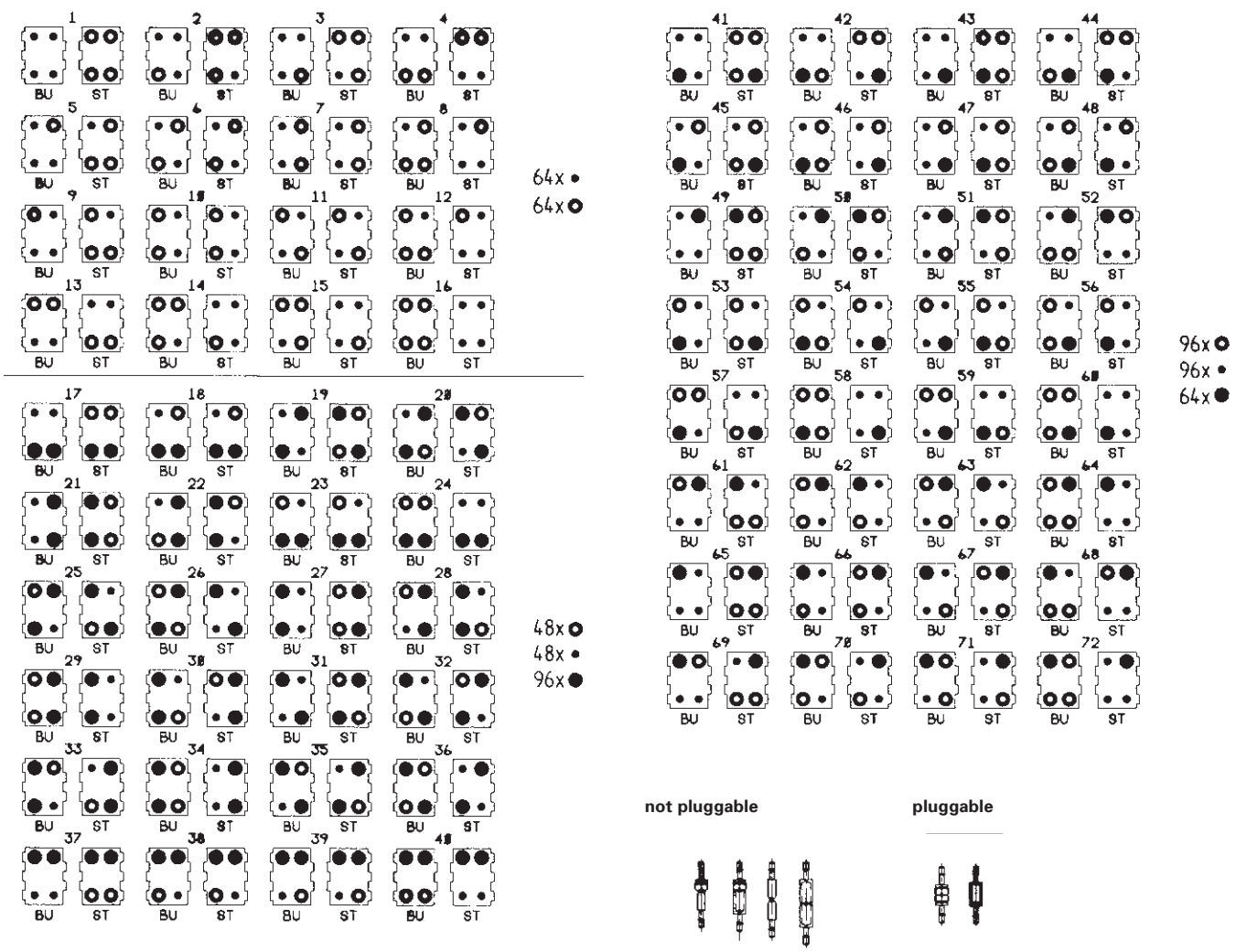


**not pluggable**



**pluggable**

# Accessories for multipole connectors and multipole adapters
# Coding options with coding pieces

revos

| | Part no. | Stand. pack |
|---|---|---|

**Coding with coding pieces for:**

- Screw inserts with part no.: 70.3xx.xxxx.x und 70.4xx.xxxx.x
- Crimping inserts with part no.: 70.7xx.xxxx.x
- Multipole adapters (mounting to the front) with part no.: 70.1xx.xxxx.x

Codings are possible even for combinations of screw and crimping inserts, and multipole adapters.

1. Diagram for 4 codings with coding pieces

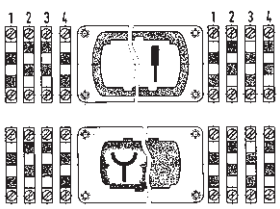


2. Diagram for 24 codings with coding pieces

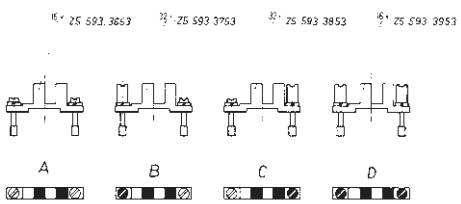


| | | | |
|---|---|---|---|
| Material | Coding pieces from Polyamide | Z5.592.1252.0 | 50 |
| Fixing screws | Steel, galvanically zinc-plated and dichromated | | |

When the coding pieces are attached to the connectors in a special order, you will get four different combinations, and only the matching inserts or multipole adapters can be connected.

| | |
|---|---|
| Z5.593.4053.0 | 1 |

Coding pieces and special coding pins for 24 different codings

# revos

Coding pieces and special coding pins for 24 different codings

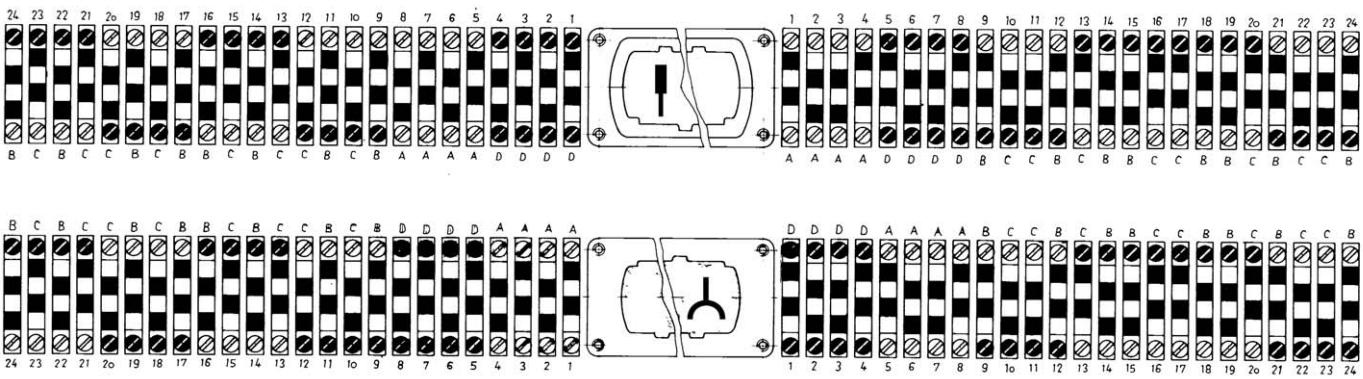

# Accessories for multipole adapters
## Marking accessories

revos

Material:
Polyamide 66/6
Color: black figures on white background

### 45° marking tag carrier

| Type | Part no. | Stand. pack |
|---|---|---|
| **2 x 4digit** | | |
| 9705 A/4 W | 04.242.2853.0 | 200 |

### 90° marking tag carrier

| | | |
|---|---|---|
| **6 digits** | 04.242.3053.0 | 200 |
| mounted in line for: | | |
| 6pole multip. adapter | 04.242.3353.0 | 50 |
| 10pole multip. adapter | 04.242.3453.0 | 50 |
| 16pole multip. adapter | 04.242.3553.0 | 25 |
| 24pole multip. adapter | 04.242.3653.0 | 25 |

### Marking tag 3 digits — Single tag

| Type | Part no. | Stand. pack |
|---|---|---|
| **unmarked** | | |
| 9705 A | 04.242.0850.0 | 500 |
| **marked*** | | |
| 9705 AB | 04.842.0850.0 | 500 |

* Please indicate the required marking together with the part number!

**Standard pack = 500 tags**

### Marking tag 8 digits — Single tag

| | | |
|---|---|---|
| **unmarked** | | |
| 9705 AL | 04.242.1553.0 | 500 |
| **marked*** | | |
| 9705 ALB | 04.842.1553.0 | 500 |

* Please indicate the required marking together with the part number!

**Standard pack = 500 tags**

### Marking strip 6pole through 24pole

| Type | Part no. | Stand. pack |
|---|---|---|
| **6pole, marked 2 x 1 through 6** | | |
| 9705 A/6,7/2x6 B1-6 | 99.002.0920.8 | 25 |
| **10pole, marked 1 through 10** | | |
| 9705 A/6,7/2x12 B1-10 | 99.003.0920.8 | 25 |
| **16pole, marked 1 through 8 and 9 through 16** | | |
| 9705 A/6,7/2x12 B1-16 | 99.004.0920.8 | 25 |
| **24pole, marked 1 through 12 and 13 through 24** | | |
| 9705 A/6,7/2x12 B1-24 | 99.005.0920.8 | 25 |
| **12 digits, unmarked** | | |
| 9705 A/6,7/12 | 04.242.6753.0 | 25 |
| **12 digits, marked** | | |
| 9705 A/6,7/12 B | 04.842.6753.0 | 25 |
| **12 digits, marked 1 - 9** | | |
| 9705 A/6,7/12 B 1-9 | 99.000.0920.8 | 25 |
| **unmarked** | | |
| 9705 A/5/10 | 04.242.5053.0 | 25 |
| **marked** | | |
| 9705 A/5/10 B | 04.842.5053.0 | 25 |
| **unmarked** | | |
| 9705 AL/5/10 | 04.242.5153.0 | 25 |
| **marked** | | |
| 9705 AL/5/10 | 04.842.5153.0 | 25 |

* Please indicate the required marking
* together with the part number!

# Accessories for multipole connectors and multipole adapters
# Tear-off marking strips / marking tags

| Material: Polyamide 66/6 white, marking in black Marking per strip | | Type | Part no. | Stand. pack |
|---|---|---|---|---|
| unmarked | | 9704 A | 04.241.1150.0 | 25 |
| marked with the same number | 1 1 1 1 1 1 1 1 1 1 | 9704 A/1 B | 04.841.1150.0 | 25 |
| | 2 2 2 2 2 2 2 2 2 2 | 9704 A/2 B | 04.841.1250.0 | 25 |
| | 3 3 3 3 3 3 3 3 3 3 | 9704 A/3 B | 04.841.1350.0 | 25 |
| | 4 4 4 4 4 4 4 4 4 4 | 9704 A/4 B | 04.841.1450.0 | 25 |
| | 5 5 5 5 5 5 5 5 5 5 | 9704 A/5 B | 04.841.1550.0 | 25 |
| | 6 6 6 6 6 6 6 6 6 6 | 9704 A/6 B | 04.841.1650.0 | 25 |
| | 7 7 7 7 7 7 7 7 7 7 | 9704 A/7 B | 04.841.1750.0 | 25 |
| | 8 8 8 8 8 8 8 8 8 8 | 9704 A/8 B | 04.841.1850.0 | 25 |
| | 9 9 9 9 9 9 9 9 9 9 | 9704 A/9 B | 04.841.1950.0 | 25 |
| | 0 0 0 0 0 0 0 0 0 0 | 9704 A/0 B | 04.841.2050.0 | 25 |
| marked with consecutive numbers | 1 2 3 4 5 6 7 8 9 0 | 9704 A/1-0 B | 04.841.2150.0 | 25 |
| marked with the same capital letters | A A A A A A A A A A | 9704 A/AG B | 04.841.2250.0 | 25 |
| | B B B B B B B B B B | 9704 A/BG B | 04.841.2350.0 | 25 |
| | C C C C C C C C C C | 9704 A/CG B | 04.841.2450.0 | 25 |
| | D D D D D D D D D D | 9704 A/DG B | 04.841.2550.0 | 25 |
| | E E E E E E E E E E | 9704 A/EG B | 04.841.2650.0 | 25 |
| | F F F F F F F F F F | 9704 A/FG B | 04.841.2750.0 | 25 |
| | G G G G G G G G G G | 9704 A/GG B | 04.841.2850.0 | 25 |
| | H H H H H H H H H H | 9704 A/HG B | 04.841.2950.0 | 25 |
| | I I I I I I I I I I | 9704 A/IG B | 04.841.3050.0 | 25 |
| | J J J J J J J J J J | 9704 A/JG B | 04.841.3150.0 | 25 |
| | K K K K K K K K K K | 9704 A/KG B | 04.841.3250.0 | 25 |
| | L L L L L L L L L L | 9704 A/LG B | 04.841.3350.0 | 25 |
| | M M M M M M M M M M | 9704 A/MG B | 04.841.3450.0 | 25 |
| | N N N N N N N N N N | 9704 A/NG B | 04.841.3550.0 | 25 |
| | O O O O O O O O O O | 9704 A/OG B | 04.841.3650.0 | 25 |
| | P P P P P P P P P P | 9704 A/PG B | 04.841.3750.0 | 25 |
| | Q Q Q Q Q Q Q Q Q Q | 9704 A/QG B | 04.841.3850.0 | 25 |
| | R R R R R R R R R R | 9704 A/RG B | 04.841.3950.0 | 25 |
| | S S S S S S S S S S | 9704 A/SG B | 04.841.4050.0 | 25 |
| | T T T T T T T T T T | 9704 A/TG B | 04.841.4150.0 | 25 |
| | U U U U U U U U U U | 9704 A/UG B | 04.841.4250.0 | 25 |
| | V V V V V V V V V V | 9704 A/VG B | 04.841.4350.0 | 25 |
| | W W W W W W W W W W | 9704 A/WG B | 04.841.4450.0 | 25 |
| | X X X X X X X X X X | 9704 A/XG B | 04.841.4550.0 | 25 |
| | Y Y Y Y Y Y Y Y Y Y | 9704 A/YG B | 04.841.4650.0 | 25 |
| | Z Z Z Z Z Z Z Z Z Z | 9704 A/ZG B | 04.841.4750.0 | 25 |
| marked with the same small letters | a a a a a a a a a a | 9704 A/AK B | 04.841.4850.0 | 25 |
| | b b b b b b b b b b | 9704 A/BK B | 04.841.4950.0 | 25 |
| | c c c c c c c c c c | 9704 A/CK B | 04.841.5050.0 | 25 |
| | d d d d d d d d d d | 9704 A/DK B | 04.841.5150.0 | 25 |
| | e e e e e e e e e e | 9704 A/EK B | 04.841.5250.0 | 25 |
| | f f f f f f f f f f | 9704 A/FK B | 04.841.5350.0 | 25 |
| | g g g g g g g g g g | 9704 A/GK B | 04.841.5450.0 | 25 |
| | h h h h h h h h h h | 9704 A/HK B | 04.841.5550.0 | 25 |
| | i i i i i i i i i i | 9704 A/IK B | 04.841.5650.0 | 25 |
| | j j j j j j j j j j | 9704 A/JK B | 04.841.5750.0 | 25 |
| | k k k k k k k k k k | 9704 A/KK B | 04.841.5850.0 | 25 |
| | l l l l l l l l l l | 9704 A/LK B | 04.841.5950.0 | 25 |
| | m m m m m m m m m m | 9704 A/MK B | 04.841.6050.0 | 25 |
| | n n n n n n n n n n | 9704 A/NK B | 04.841.6150.0 | 25 |
| | o o o o o o o o o o | 9704 A/OK B | 04.841.6250.0 | 25 |
| | p p p p p p p p p p | 9704 A/PK B | 04.841.6350.0 | 25 |
| | q q q q q q q q q q | 9704 A/QK B | 04.841.6450.0 | 25 |
| | r r r r r r r r r r | 9704 A/RK B | 04.841.6550.0 | 25 |
| | s s s s s s s s s s | 9704 A/SK B | 04.841.6650.0 | 25 |
| | t t t t t t t t t t | 9704 A/TK B | 04.841.6750.0 | 25 |
| | u u u u u u u u u u | 9704 A/UK B | 04.841.6850.0 | 25 |
| | v v v v v v v v v v | 9704 A/VK B | 04.841.6950.0 | 25 |
| | w w w w w w w w w w | 9704 A/WK B | 04.841.7050.0 | 25 |
| | x x x x x x x x x x | 9704 A/XK B | 04.841.7150.0 | 25 |
| | y y y y y y y y y y | 9704 A/YK B | 04.841.7250.0 | 25 |
| | z z z z z z z z z z | 9704 A/ZK B | 04.841.7350.0 | 25 |
| marked with the same symbols | + + + + + + + + + + | 9704 A/+ B | 04.841.7450.0 | 25 |
| | – – – – – – – – – – | 9704 A/– B | 04.841.7550.0 | 25 |
| | / / / / / / / / / / | 9704 A// B | 04.841.7650.0 | 25 |
| | . . . . . . . . . . | 9704 A/. B | 04.841.7750.0 | 25 |
| 1 set of the same numbers = 10 x 25 strips = 2500 numbers | 1 1 1 ... 0 0 0 | 111 bis 000 | 04.841.9050.0 | 1 |
| 1 set of cap. letters = 26 x 25 strips = 6500 letters | A A A ... Z Z Z | A bis Z GB | 04.841.9150.0 | 1 |
| 1 set of small letters = 26 x 25 strips = 6500 letters | a a a ... z z z | a bis z KB | 04.841.9250.0 | 1 |

# *facts* & DATA

**Technical explanations on:**
**Ferrules**
**Tools**
**Standards and certifications**

***facts*** structured in three main sections for:

- important accessories
- technical documentation and basic information in tables
- important standards and certifications

All Wieland Components which require CE general certification are CE certified, and identified with the CE logo.

# Technical Explanations

## Tools
## Approvals

facts & DATA

# facts & DATA


Preparation of conductor ends

Electric Automated crimping machine

Technical explanations

Approvals

# CONTENTS

facts & DATA


- **Ferrules** according to DIN 46 228 p1 through p4 — Page 796
- **Ferrules** — Page 797
- **Tools** — Page 798
  - – Crimp contact kit — Page 798
  - – Crimping dies and contact positioners — Page 798
  - – Crimping tools for ferrules — Page 798
  - – Stripping tool, screwdrivers — Page 799

- **Crimping machine** — Page 800
- **Disposable magazines** with female and male contacts for industrial multipole connectors — Page 801

- **Types of mounting rails** — Page 802
- **Tables, technical information, explanations** — Page 804
- **DIN rail terminal blocks for increased safety (Ex terminal blocks)** — Page 824

- **Approvals** — Page 834

**Ferrules with insulating sleeves**
for 0.5 to 25 mm² conductors

**Materials:**
Sleeve:
– Polypropylene, temperature resistant up to 105 °C, tracking resistant

**Tube:**
E-Cu, galvanically tin-plated

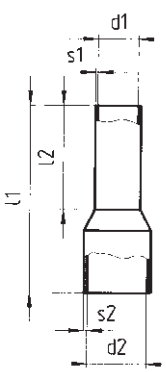


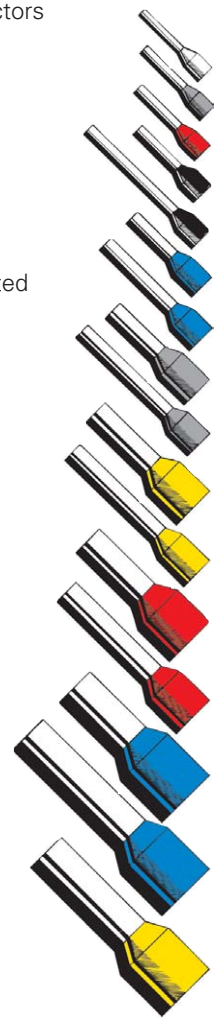

## accord. to DIN 46 228 T4

| Cross section mm²/AWG | | Color | Part no. | Std. pack | $s_2$ | $d_2$ | $l_1$ | $l_2$ | $d_1$ | $s_1$ |
|---|---|---|---|---|---|---|---|---|---|---|
| 0.50/20 | norm. | white | 06.600.2027.0 | 100 | 0.25 | 2.6 | 14 | 8 | 1.0 | 0.15 |
| 0.75/18 | norm. | gray | 06.600.2127.0 | 100 | 0.25 | 2.8 | 14 | 8 | 1.2 | 0.15 |
| 1.00/18 | norm. | red | 06.600.2227.0 | 100 | 0.25 | 3.0 | 14 | 8 | 1.4 | 0.15 |
| 1.50/16 | norm. | black | 06.600.2327.0 | 100 | 0.25 | 3.5 | 14 | 8 | 1.7 | 0.15 |
| 1.50/16 | long | black | 06.600.2427.0 | 100 | 0.25 | 3.5 | 24 | 18 | 1.7 | 0.15 |
| 2.50/14 | norm. | blue | 06.600.2527.0 | 100 | 0.25 | 4.2 | 14 | 8 | 2.2 | 0.15 |
| 2.50/14 | long | blue | 06.600.2627.0 | 100 | 0.25 | 4.2 | 24 | 18 | 2.2 | 0.15 |
| 4.00/12 | norm. | gray | 06.600.2727.0 | 100 | 0.30 | 4.8 | 17 | 10 | 2.8 | 0.20 |
| 4.00/12 | long | gray | 06.600.2827.0 | 100 | 0.30 | 4.8 | 26 | 18 | 2.8 | 0.20 |
| 6.00/10 | norm. | yellow | 06.600.2927.0 | 100 | 0.30 | 6.3 | 20 | 12 | 3.5 | 0.20 |
| 6.00/10 | long | yellow | 06.600.3027.0 | 100 | 0.30 | 6.3 | 26 | 18 | 3.5 | 0.20 |
| 10.00/8 | norm. | red | 06.600.3127.0 | 100 | 0.40 | 7.6 | 22 | 12 | 4.5 | 0.20 |
| 10.00/8 | long | red | 06.600.3227.0 | 100 | 0.40 | 7.6 | 28 | 18 | 4.5 | 0.20 |
| 16.00/6 | norm. | blue | 06.600.3327.0 | 100 | 0.40 | 8.8 | 24 | 12 | 5.8 | 0.20 |
| 16.00/6 | long | blue | 06.600.3427.0 | 100 | 0.40 | 8.8 | 28 | 18 | 5.8 | 0.20 |
| 25.00/4 | half long | yellow | 06.600.3527.0 | 50 | 0.40 | 11.2 | 30 | 18 | 7.3 | 0.20 |

**Ferrules without insulating sleeves**
for 0.5 to 16 mm² conductors
**Material:** E-Cu, galvanically tin-plated

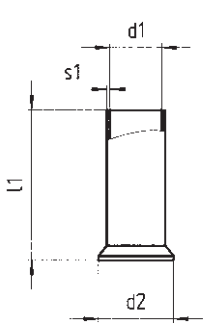


## accord. to DIN 46 228 T1

| | | | | | | | | |
|---|---|---|---|---|---|---|---|---|
| 0.50/20 | norm. | 06.600.4027.0 | 1000 | 2.1 | 6 | 1.0 | 0.15 |
| 0.75/18 | norm. | 06.600.4127.0 | 1000 | 2.3 | 6 | 1.2 | 0.15 |
| 1.00/18 | norm. | 06.600.4227.0 | 1000 | 2.5 | 6 | 1.4 | 0.15 |
| 1.50/16 | norm. | 06.600.4327.0 | 1000 | 2.8 | 7 | 1.7 | 0.15 |
| 2.50/14 | norm. | 06.600.4427.0 | 1000 | 3.4 | 7 | 2.2 | 0.15 |
| 4.00/12 | norm. | 06.600.4527.0 | 1000 | 4.0 | 9 | 2.8 | 0.20 |
| 6.00/10 | norm. | 06.600.4627.0 | 500 | 4.7 | 10 | 3.5 | 0.20 |
| 10.00/8 | norm. | 06.600.4727.0 | 500 | 5.8 | 12 | 4.5 | 0.20 |
| 16.00/6 | norm. | 06.600.4827.0 | 100 | 7.5 | 12 | 5.8 | 0.20 |
| 25.00/4 | norm. | 06.600.4927.0 | 100 | 9.5 | 15 | 7.3 | 0.20 |
| 35.00/2 | norm. | 06.600.5027.0 | 100 | 11.0 | 18 | 8.3 | 0.20 |

# Ferrules

facts

**Ferrules with insulating sleeves**
for 0.36 to 25 mm² conductors

**Materials:**
Sleeve:
– Rilsan,
temperature resistant up to 130 °C,
tracking resistant

**Tube:**
E-Cu, galvanically tin-plated

| Cross section mm²/AWG | Color | Part no. | Std. pack | $s_2$ | $d_2$ | $l_1$ | $l_2$ | $d_1$ | $s_1$ | |
|---|---|---|---|---|---|---|---|---|---|---|
| 2.08/16 | yellow | 05.596.6127.0 | 1000 | 0.25 | 3.7 | 14.5 | 8.2 | 2.0 | 0.175 | |

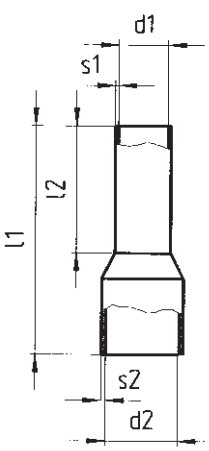


**Twin ferrules with insulating sleeves**

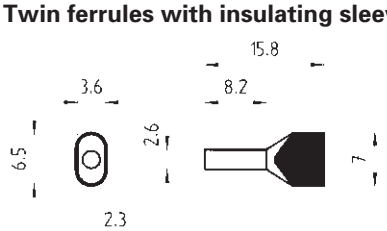


| Cross section mm²/AWG | Type | Part no. | Std. pack | | |
|---|---|---|---|---|---|
| 2 x 1.5/16 | AEI 1,5 Z-N | 05.599.2027.0 | 500 | | |

## Modular kit for Crimp contacts

For contact crimping we provide crimping tools in a modular system:
This crimping tool system consists of the basic crimping tool and case. Additionally, you can select the crimping dies and contact positioners for your required contact type. The crimping dies and the contact positioner are easily inserted in the tool and exchanged.
You will require only one crimping tool for several contact types as you can use it with the corresponding crimping dies and contact positioners.

## Crimping tool

for ferrules
0.08 – 6 mm² AWG 28 – 10

| Part no. | Std. pack |
|---|---|
| 95.101.0900.0 | 1 |

total length:
174 mm

- square crimping
- releasable latch
- compression adjustable

## Crimping tool

for ferrules
0.75 – 10 mm² AWG 19 – 7

| Part no. | Std. pack |
|---|---|
| 95.101.1000.0 | 1 |

total length:
174 mm

- square crimping
- releasable latch
- compression adjustable

| Cross section mm²/AWG | Part no. | Std. pack |
|---|---|---|
| 203 mm | 95.101.0800.0 | 1 |

- parallel crimping
- releasable latch
- toggle ratio

| | | |
|---|---|---|
| Crimp contacts, turned, Ø 3.6 for ***revos*** 4 – 10 mm²/12 – 8 AWG | | |
| Crimping die D | 05.502.2300.0 | 1 |
| Contact positioner 1 | 05.502.3100.0 | 1 |
| Crimp contacts, punched, Ø 2.5 for ***revos*** 0.5 – 2.5 mm²/20 – 14 AWG | | |
| Crimping die C | 05.502.2200.0 | 1 |
| Contact positioner 2 | 05.502.3200.0 | 1 |
| Crimp contacts, turned, Ø 2.5 for ***revos*** 0.5 – 4 mm²/20 – 12 AWG | | |
| Crimping die B | 05.502.2100.0 | 1 |
| Contact positioner 1 | 05.502.3100.0 | 1 |
| Crimp contacts, turned, Ø 1.6 for ***revos*** 0.14 – 2.5 mm²/26 – 14 AWG | | |
| Crimping die B | 05.502.2100.0 | 1 |
| Contact positioner 1 | 05.502.3100.0 | 1 |
| Crimp contacts, punched, Ø 1 for ***revos*** 0.09 – 0.5 mm²/28 – 20 AWG | | |
| Crimping die A | 05.502.2000.0 | 1 |
| No contact positioner required | | |
| Crimp contacts, turned, for 400 V – 690 V series 0.5 – 4 mm²/20 – 12 AWG | | |
| Crimping die B | 05.502.2100.0 | 1 |
| Contact positioner 3 | 05.502.3300.0 | 1 |
| Crimp contacts, punched, for multi-pole connectors 0.2 – 1.5 mm²/24 – 16 AWG | | |
| Crimping die E | 05.502.2400.0 | 1 |
| Contact positioner 2 | 05.502.3200.0 | 1 |

# facts

## Crimping tool

for ferrules
10 – 25 mm² AWG 7 – 4

| Part no. | Std. pack |
|---|---|
| total length: 203 mm | |
| 95.101.1100.0 | 1 |

- parallel crimping
- releasable latch
- toggle ratio
- compression adjustable

## Crimping tool

for ferrules
35 – 50 mm² AWG 2 – 1/0

| Part no. | Std. pack |
|---|---|
| total length: 203 mm | |
| 95.101.1200.0 | 1 |

- parallel crimping
- releasable latch
- toggle ratio
- compression adjustable

## Stripping tool

0.08 – 10 mm² AWG 28 – 7

| Part no. | Std. pack |
|---|---|
| total length: 197 mm | |
| 95.350.0100.0 | 1 |

- adjustable length
- integrated wire cutter
- tool elements made from glass fibre reinforced Polyamide

## Screwdriver

| Part no. | Std. pack |
|---|---|
| 06.502.4000.0 | 1 |

- blade 0.6 x 3.5 accord. to DIN 5264 B
- for WKF DIN rail spring clamp terminal blocks
- for WKC DIN rail IDC terminal blocks
- for multipole connectors with spring connection
- ergonomically shaped handle

# Automated crimping machine to connect wires to female and male contacts for multipole connectors

**facts** & DATA

### Automatic stripping and crimping machine

This machine enables wire stripping and crimping in one operation.

A sensor registers when a cable is inserted manually. Then the wire is automatically stripped and then crimped – for the user, this means a time-saving operation.

The female and male parts can be fed in on reels (0.75 – 1.5 mm$^2$) or by means of a reusable magazine (for 0.5 – 4 mm$^2$ connectors).

The following easily exchangeable tool inserts are available for multi-purpose use of the crimping machine:

– for ST 18 connectors
– for industrial multipole connectors

Dimensions: H 570 mm, W 410 mm, D 510 mm; weight: 85 kg

Power supply: 220 V ~

Part no. **95.000.0005.0**

| | Description | for cross sect. in mm$^2$/AWG | | Part no. | Std. pack |
|---|---|---|---|---|---|
| for connector versions | Disposable magazine with 25 | 0.5 | / 20 | Z2.123.7000.0 | 25 |
| | female contacts | 0.75 – 1 | / 18 | Z2.123.7100.0 | 25 |
| **70.700 ... 58.0** | | 1.5 | / 16 | Z2.123.7200.0 | 25 |
| **70.710 ... 58.0** | | 2.5 | / 14 | Z2.123.7300.0 | 25 |
| **72.700 ... 58.0** | | 4* | / 12 | Z2.123.7400.0 | 25 |
| **72.710 ... 58.0** | | | | | |
| | Disposable magazine with 25 | 0.5 | / 20 | Z5.543.7000.0 | 25 |
| | male contacts | 0.75 – 1 | / 18 | Z5.543.7100.0 | 25 |
| | | 1.5 | / 16 | Z5.543.7200.0 | 25 |
| | | 2.5 | / 14 | Z5.543.7300.0 | 25 |
| | | 4* | / 12 | Z5.543.7400.0 | 25 |

* not possible with machine!

## Disposable magazines with female and male contacts for industrial multipole connectors

# facts

Use of tool
when installed

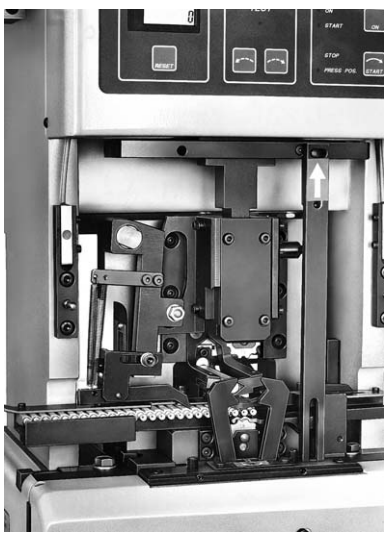

Use of tool with reels,
female and male contacts for:

| | |
|---|---|
| multipole connectors | Part no. **95.000.0007.0** |
| ST 18 connectors | Part no. **95.000.0008.0** |

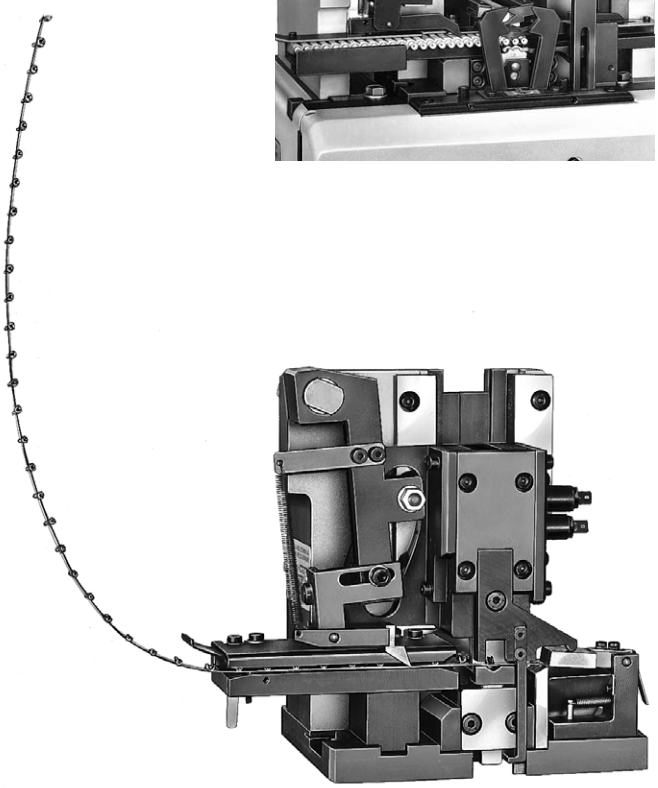

Use of tool for disposable magazines with
female and male contacts
for industrial multipole connectors

Part no. **95.000.0006.0**

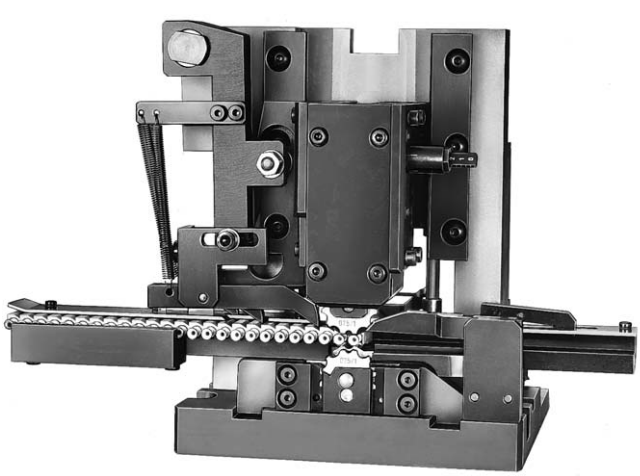

# Mounting rails

## facts & DATA

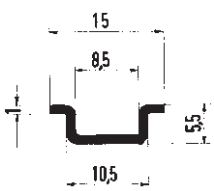


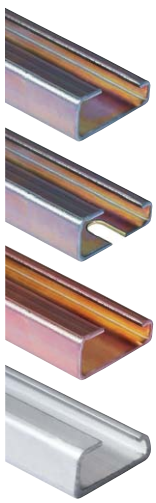

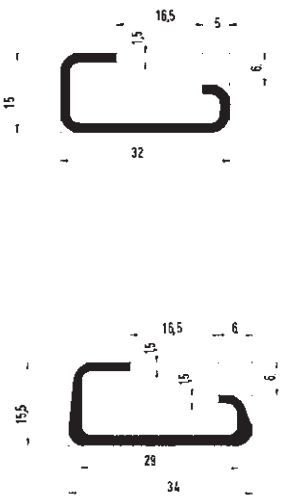


## Mounting rail 15

accord. to DIN EN 60715

| Type | Part no. | Std. pack |
|---|---|---|
| Length: 1 m | 98.090.0000.0 | galvan. zinc-plated steel |
| Length: 2 m | 98.090.0015.0 | galvan. zinc-plated steel |
| Length: 3 m | 98.095.3000.0 | galvan. zinc-plated steel |
| **Mounting rail**<br>**accord. to DIN EN 60715 - 15 x 5.5**<br>yellow chromated steel,<br>slotted<br>Length: 1 m | | |
| 9021 15 x 5,5 EN 60715 | 98.090.0000.0 | 1 |
| **Mounting rail**<br>same as above, but<br>2 m long | | |
| 9021 | 98.090.0015.0 | 10 |

## Mounting rail 32

accord. to DIN EN 60715

| Type | Part no. | Std. pack |
|---|---|---|
| Length: 2 m | | |
| 9006 EN 60715 G-32 | 98.190.0000.0 | galvan. zinc-plated steel |
| 9006 CU EN 60715 G-32 | 98.220.0000.0 | E-Cu |
| slotted | 98.190.1000.0 | galvan. zinc-plated steel |
| 9006 AL 32 | 98.210.0000.0 | AL |
| **Mounting rail**<br>**accord. to DIN EN 60715 – G-32**<br>yellow chromated steel,<br>unslotted<br>Length: 2 m | | |
| 9006 EN 60715 G-32 | 98.190.0000.0 | 1 |
| **Mounting rail**<br>same as above, but slotted<br>Length: 2 m | | |
| 9006 slotted | 98.190.1000.0 | 1 |
| **Mounting rail**<br>similar to DIN EN 60715 – G-32,<br>made from aluminum,<br>unslotted<br>Length: 2 m | | |
| 9006 AL 32 | 98.210.0000.0 | 1 |
| **Mounting rail**<br>similar to DIN EN 60715 – G-32,<br>made from copper,<br>unslotted<br>Length: 2 m | | |
| 9006 CU EN 60715 G-32 | 98.220.0000.0 | 10 |

# facts

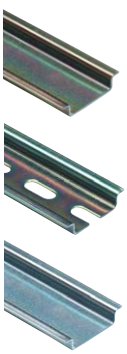

## Mounting rail 35 x 7.5

accord. to DIN EN 60715

| Type | Part no. | Std. pack |
|---|---|---|
| Length: 2 m | | |
| 35 x 27 x 7,5 EN 60715 | 98.300.0000.0 | galvan. zinc-plated steel |
| 35 x 27 x 7,5 1 m | 98.305.1000.0 | galvan. zinc-plated steel |
| 35 x 27 x 7,5 slotted | 98.300.1000.0 | galvan. zinc-plated steel |
| **Mounting rail**<br>**accord. to DIN EN 60715 - 35 x 7.5**<br>yellow chromated steel,<br>low version, unslotted<br>Length: 2 m | 98.300.0000.0 | 1 |
| **Mounting rail**<br>same as above, but<br>1 m long | 98.305.1000.0 | 1 |
| **Mounting rail**<br>same as above, but slotted<br>Length: 2 m | 98.300.1000.0 | 1 |

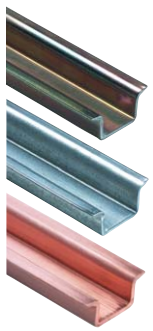

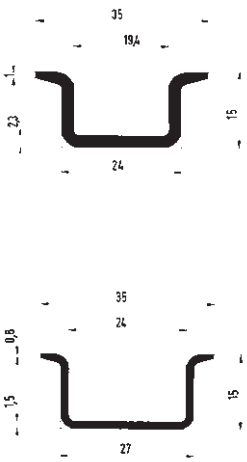


## Mounting rail 35 x 15

accord. to DIN EN 60715

| Type | Part no. | Std. pack |
|---|---|---|
| 35 x 24 x 15 EN 60715 | 98.360.0000.0 | galvan. zinc-plated steel |
| 35 x 24 x 15 EN 60715 | 98.380.0000.0 | E-Cu |
| similar to DIN EN 60715 | | |
| 35 x 27 x 15 | 98.370.0000.0 | galvan. zinc-plated steel |
| 35 x 27 x 15 slotted | 98.370.1000.0 | galvan. zinc-plated steel |
| 35 x 27 x 15 slotted 1 m | 98.375.1000.0 | galvan. zinc-plated steel |
| **Mounting rail**<br>**accord. to DIN EN 60715 – 35 x 15**<br>yellow chromated steel, 2.3 mm thick<br>high version, unslotted<br>Length: 2 m | 98.360.0000.0 | 1 |
| **Mounting rail**<br>similar to DIN EN 60715 – 35 x 15,<br>yellow chromated steel, 1.5 mm thick<br>high version, unslotted<br>Length: 2 m | 98.370.0000.0 | 1 |
| **Mounting rail**<br>same as above, but slotted<br>Length: 2 m | 98.370.1000.0 | 1 |
| **Mounting rail**<br>same as above, but<br>1 m long | 98.375.1000.0 | 10 |
| **Mounting rail**<br>DIN EN 60715 – 35 x 15<br>copper, 2.3 mm thick,<br>high version, unslotted<br>Length: 2 m | 98.380.0000.0 | 10 |

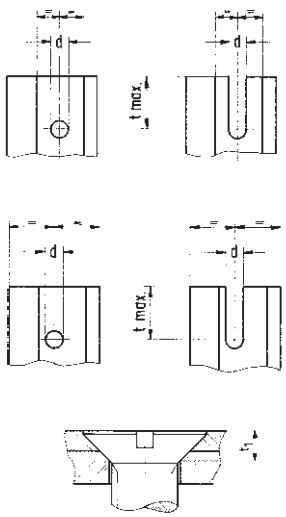


## Mounting rails for OEM production

Mounting rails are generally supplied in lengths of 2 m. For OEM production we can supply mounting rails in all desired lengths, already punched with fastening holes as shown in the following table.

| Version | Size of the fastening screws M 4 d | M 4 t max | M 5 d | M 5 t max | M 6 d | M 6 t max |
|---|---|---|---|---|---|---|
| 1 | 4.5 | | 5.5 | | 6.6 | |
| 2 | 4.5 | 24 | 5.5 | 22 | 6.6 | 22 |
| 3 | 4.5 | | 5.5 | | 6.6 | |
| 4 | 4.5 | 24 | 5.5 | 22 | 6.6 | 22 |

Countersunk holes accord. to DIN 75 must be specially indicated. It should be observed that the measuring unit $t_1$ of countersunk screws M 4 and larger exceeds the material thickness of the mounting rail for the entire countersunk section. For this reason, the fastening base must provide a countersunk section also.

# Information on transition from Pg to metric threads

**facts** & DATA

**Pg threads are available upon request!**

## 1. Basic legal conditions

The European standard EN 50 262 "Metric Cable Glands for Electrical Installation" was ratified on April 01, 1989 by CENELEC (European Committee for Electrotechnical Standardization) and put into force.

A corresponding German standard DIN EN 50 262 published in March 1999 will replace the national standards:
VDE security standard 0619 quoting standards DIN 46 319 and DIN 46 320, with a transition period until March 01, 2001.

EN 50 262 is valid in all EC countries and countries not belonging to the EC and cooperating in CENELEC will accept the standard.

The main difference in the new EN standard is its character as a security standard.
As a building standard it only defines the metric thread and its lead.

## 2. Effects of the change

The changeover will affect all manufacturers of cable glands, cable entries and housings for rectangular connectors.

The ten Pg sizes :

Pg 7 / 9 / 11 / 13.5 / 16 / 21 / 29 / 36 / 42 and 48

are replaced by eight metric sizes :

M 12 / 16 / 20 / 25 / 32 / 40 / 50 and 63

## 3. Comparison of the Pg/metric cable gland sizes

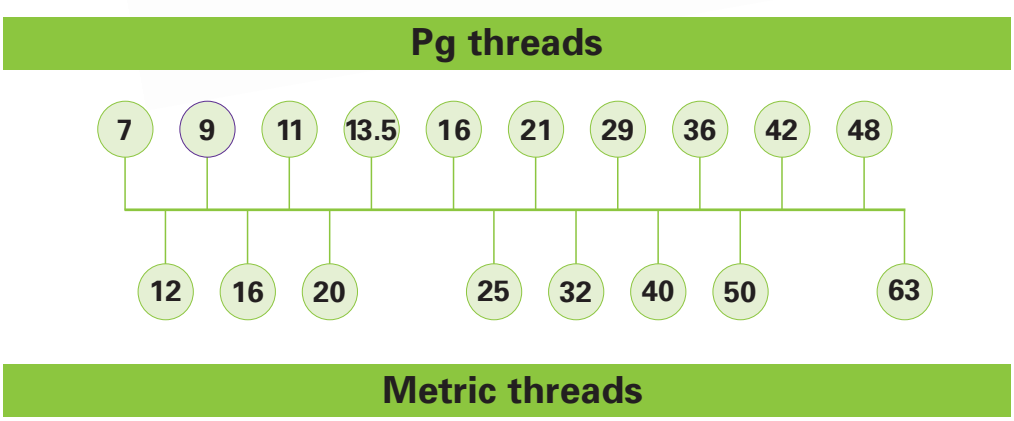


## 4. Assigning the Pg/metric cable glands

As the ten Pg sizes are replaced by eight metric threads, users will need to reassign the connection ranges of the cables to the metric thread sizes and housings.

# 5. Conversion

## 5.1 Comparison between Pg thread and metric thread

| Pg thread | Metric thread | Preferred types |
|---|---|---|
| Pg 7 | M 12 | |
| Pg 9 | M 16 | |
| Pg 11 | M 20 | X |
| Pg 13.5 | M 20 | X |
| Pg 16 | M 20 | X |
| Pg 21 | M 25 | X |
| Pg 29 | M 32 | X |
| Pg 36 | M 40 | |
| Pg 42 | M 50 | |

Hoods of the revos BASIC series with Pg thread 13.5 and 16 are also available with M 25, while PG thread 21 is also available with M 32 thread.

If you require the Pg 16 and 24 housings in M 32, you will have to use the extended height housings.

## 5.2 Connection range for housing versions 7x.xxx.xxxx.0

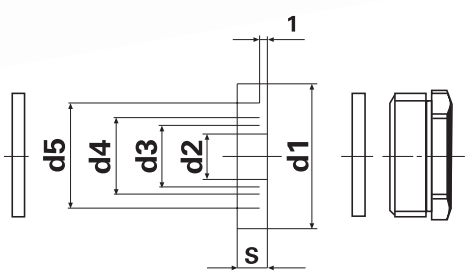


**For more information visit us on the internet under www.wieland-electric.com**

Please see the following table for the connection ranges of cable glands without strain relief:

| Metric thread | d1 | d2 | Connection range in mm | d3 | Connection range in mm | d4 | Connection range in mm | d5 | Connection range in mm |
|---|---|---|---|---|---|---|---|---|---|
| **M 16** | 13.8 | 3 | 2 – 4.5 | 6 | 5 – 7.5 | 9 | 8 – 10.5 | | |
| **M 20** | 17.6 | 4 | 3 – 5.5 | 7 | 6 – 8.5 | 10 | 9 – 11.5 | 13 | 12 – 14.5 |
| **M 25** | 22.6 | 8.5 | 7.5 – 10 | 11.5 | 10.5 – 13 | 14.5 | 13.5 – 16 | 17.5 | 16.5 – 19 |
| **M 32** | 29.6 | 16 | 15 – 17.5 | 19 | 18 – 20.5 | 22 | 21 – 23.5 | 25 | 24 – 26.5 |

## 5.3 Connection ranges for housing versions with flared gland 7x.xxx.xxxx.3

| Metric thread | Connection range in mm |
|---|---|
| **M 16** | 6 – 9 |
| **M 20** | 9 – 13.5 |
| **M 25** | 14 – 20 |
| **M 32** | 19 – 29 |

Information on hazardous location approval : Class I, Zone 2 Multipole Kits are available certified to CSA standard C22.2 182.3, E-79-15-95.

Please contact us to discuss your applications.

## Maximum short-time current capability assigned to mounting rails

DIN EN 60 947-7-2/VDE 0611 part 3: 1996-06

| Rail profile | Material | Equivalent E-Cu cross section mm² | Short-time current capability 1 s kA | Rated thermal current of a PEN busbar A |
|---|---|---|---|---|
| DIN rail TH 15 – 5.5 accord. to IEC 715 | Steel<br>Copper[1)]<br>Aluminum[1)] | 10<br>25<br>16 | 1.2<br>3<br>1.92 | –<br>101<br>76 |
| G rail G32 accord. to IEC 715 | Steel<br>Copper[1)]<br>Aluminum[1)] | 35<br>120<br>70 | 4.2<br>14.4<br>8.4 | –<br>269<br>192 |
| DIN rail TH 35 -7.5 accord. to IEC 715 | Steel<br>Copper[1)]<br>Aluminum[1)] | 16<br>50<br>35 | 1.92<br>6<br>4.2 | –<br>150<br>125 |
| DIN rail TH 35 -15 accord. to IEC 715 (made from 2.3 mm thick material) | Steel<br>Copper[1)]<br>Aluminum[1)] | 50<br>150<br>95 | 6<br>18<br>11.4 | –<br>309<br>232 |

[1)] Selected copper or aluminum alloys from the manufacturer of the terminal block layout were used to achieve the values in the table.

## Electrical and thermal characteristics

| | | | | | Duroplast | Thermoplast | | | | | | | |
|---|---|---|---|---|---|---|---|---|---|---|---|---|---|
| | | | | | | Polyamide | | | | | | Polybutylen-terephtalate | Poly-carbonate |
| Key figures / characteristics | Standard | | Unit | | Typ 150 | PA 6 | PA 6 GF | PA 66 | PA 66 GF | PA 66/6 | PA 66/6 GF | PBT GF | PC |
| Dielectric strength | VDE 0303-T21 | IEC 243/1 | kV / mm | tr/lf. | ca. 10 | 100 / 60 | 40 / 31 | 120 / 80 | 80 / 65 | 55 / 45 | 26 / 23 | 40 | 35 |
| Dielectric loss tan _ at 1 MHz | VDE 0303-T4 | IEC 250 | | tr./lf. | 0.3 | 0.03 / 0.3 | 0.015 / - | 0.025 / 0.2 | 0.02 / 0.1 | 0.02 / 0.3 | 0.016 / - | 0.017 | 0.01 |
| Specific feed through resistance | VDE 0303-T30 | IEC 93 | Ω x cm | lf. | $10^{10}$ | $10^{12}$ | $10^{11}$ | $10^{12}$ | $10^{12}$ | $10^{12}$ | $10^{15}$ | $10^{16}$ | $10^{15}$ |
| Surface resistance | VDE0303-T30 | IEC 93 | Ω | lf. | $10^{10}$ | $10^{10}$ | $10^{10}$ | $10^{10}$ | $10^{10}$ | $10^{10}$ | $10^{14}$ | $10^{13}$ | $10^{15}$ |
| Creepage | VDE0303-T1 | IEC 112 | CTI | | 600 | 600 | 550 | 600 | 550 | 600 | 325 | 200 | 225 |
| Operating temperature RTI* | UL 746 B | | °C at 1.5mm | | | 130 | 140 | 125 | 115 | 120 | 140 | 140 | 130 |
| Temperature index TI ** | VDE0304 T.21 | IEC 216-1 | °C | | 120 / 80 | 100 / 80 | 185 / 160 | 118 / 101 | 157 / 139 | 123 / 107 | | 130 / 120 | |
| Lower operating temperature without mechanical stress | | | °C | | -55 | -40 | -40 | -40 | -40 | -40 | -40 | -40 | -40 |
| Flammability | UL 94 | | class/material thickness | | V0 | V2 / 1.5 | V2 / 0.8 | V2 / 0.4 | V0 / 0.8 | V0 / 0.4 | V0 / 1.5 | V0 / 0.5 | V0 / 1.04 |
| Suitability for tropical areas | | | | | good | good | good | good | good | good | good | good | good |

* electrical value

** related to 50% strain resistance drop after 5,000/20,000 hours

# facts

## Rated connecting capacity and connectable conductor

Table 1 (IEC 60 999-1: 2000)

| Rated connecting capacity | Connectable conductors and their theoretical diameters | | | | | | | | | |
|---|---|---|---|---|---|---|---|---|---|---|
| | Metric | | | | | AWG | | | | |
| | rigid | | | flexible | | rigid | | | flexible | |
| mm² | mm² | solid Ø mm | stranded Ø mm | mm² | Ø mm | Gauge | 1) solid Ø mm | 1) Class B stranded Ø mm | | 2) Class I, K, M stranded Ø mm |
| 0.50 | 0.5 | 0.9 | 1.1 | 0.5 | 1.1 | 20 | 0.85 | 0.97 | 20 | 1.02 |
| 0.75 | 0.75 | 1.0 | 1.2 | 0.75 | 1.3 | 18 | 1.07 | 1.23 | 18 | 1.28 |
| 1.0 | 1.0 | 1.2 | 1.4 | 1.0 | 1.5 | – | – | – | – | – |
| 1.5 | 1.5 | 1.5 | 1.7 | 1.5 | 1.8 | 16 | 1.35 | 1.55 | 16 | 1.60 |
| 2.5 | 2.5 | 1.9 | 2.2 | 2.5 | 2.3* | 14 | 1.71 | 1.95 | 14 | 2.08 |
| 4.0 | 4.0 | 2.4 | 2.7 | 4.0 | 2.9* | 12 | 2.15 | 2.45 | 12 | 2.70 |
| 6.0 | 6.0 | 2.9 | 3.3 | 4.0 | 2.9* | 10 | 2.72 | 3.09 | – | – |
| 10.0 | 10.0 | 3.7 | 4.2 | 6.0 | 3.9 | 8 | 3.43 | 3.89 | 10 | 3.36 |
| 16.0 | 16.0 | 4.6 | 5.3 | 10.0 | 5.1 | 6 | 4.32 | 4.91 | 8 | 4.32 |
| 25.0 | 25.0 | – | 6.6 | 16.0 | 6.3 | 4 | 5.45 | 6.18 | 6 | 5.73 |
| 35.0 | 35.0 | – | 7.9 | 25.0 | 7.8 | 2 | 6.87 | 7.78 | 4 | 7.26 |

* Measurement only for flexible conductors of Class 5 according to HD 383 ( = IEC 228A, mod.), DIN VDE 0295

1) Nominal diameter + 5%

2) Largest diameter for conductors of Class I, K, M, + 5%

The diameter of the largest rigid and flexible conductors are based on Table 1 of HD 383 (IEC 228A) and for AWG conductors are based on ASTM B172-71, ICEA Publ. S-19-81 and ICEA Publ. S-66-516.

## Theoretical diameters of the largest conductor and ratio between the rated cross section and connectable conductors

Table 1 (IEC 60 999-2: 1995)

| Rated cross section | Theoretical diameter of the largest conductor | | | | | Connectable conductor |
|---|---|---|---|---|---|---|
| | Metric | | AWG/Kcmil | | AWG/Kcmil | |
| mm² | rigid stranded mm | flexible Class 5 mm | Gauge | rigid stranded mm | flexible mm | |
| 35* | 7.9 | 9.2 | 2 | 7.78 | 9.02 | is to be indicated in the appropriate equipment specifications |
| – | – | – | 1 | 8.85 | 10.61 | |
| 50 | 9.1 | 11.0 | 0 | 9.64 | 12.08 | |
| 70 | 11.0 | 13.1 | 00 | 11.17 | 13.54 | |
| 95 | 12.9 | 15.1 | 000 | 12.54 | 15.33 | |
| – | – | – | 0000 | 14.08 | 17.22 | |
| 120 | 14.5 | 17.0 | 250 | 15.34 | 19.01 | |
| 150 | 16.2 | 19.0 | 300 | 16.80 | 20.48 | |
| 185 | 18.0 | 21.0 | 350 | 18.16 | 22.05 | |
| – | – | | 400 | 19.42 | 24.05 | |
| 240 | 20.6 | 24.0 | 500 | 21.68 | 26.57 | |
| 300 | 23.1 | 27.0 | 600 | 23.82 | 30.03 | |

* see IEC 60 999-1, table 1

# Tables, technical data, explanations

facts & DATA

## Standard cross sections of round copper conductors

| Metric size ISO mm² | Comparison between AWG/kcmil und metric sizes | | |
|---|---|---|---|
| | AWG | kcmil | mm² |
| 0.1* | 28 | | 0.081 |
| 0.14* | 26 | | 0.128 |
| 0.2 | 24 | | 0.205 |
| – | 22 | | 0.324 |
| 0.5 | 20 | | 0.519 |
| 0.75 | 18 | | 0.82 |
| 1 | – | | – |
| 1.5 | 16 | | 1.3 |
| 2.5 | 14 | | 2.1 |
| 4 | 12 | | 3.3 |
| 6 | 10 | | 5.3 |
| 10 | 8 | | 8.4 |

| Metric size ISO mm² | Comparison between AWG/kcmil und metric sizes | | |
|---|---|---|---|
| | AWG | kcmil | mm² |
| 16 | 6 | | 13.3 |
| 25 | 4 | | 21.2 |
| 35 | 2 | | 33.6 |
| 50 | (1/0) 0 | | 53.5 |
| 70 | (2/0) 00 | | 67.4 |
| 95 | (3/0) 000 | | 85 |
| – | (4/0) 0000 | | 107.2 |
| 120 | | 250 | 127 |
| 150 | | 300 | 152 |
| 185 | | 350 | 177 |
| 240 | | 500 | 253 |
| 300 | | 600 | 304 |

* not standardized

## Design and dimensions of solid, stranded, fine stranded and extra fine stranded copper conductors

Excerpt from DIN VDE 0295 (06.92)

| Nominal cross section | solid | | stranded | | fine stranded | |
|---|---|---|---|---|---|---|
| mm² | Diameter max. size | Number of wires | Diameter max. size | Number of wires | Diameter max. size | Number of wires Guide value |
| 0.5 | 0.9 | 1 | – | – | 1.1 | 16 |
| 0.75 | 1.0 | 1 | – | – | 1.3 | 24 |
| 1 | 1.2 | 1 | – | – | 1.5 | 32 |
| 1.5 | 1.5 | 1 | – | – | 1.8 | 30 |
| 2.5 | 1.9 | 1 | – | – | 2.3 | 50 |
| 4 | 2.4 | 1 | – | – | 2.9 | 56 |
| 6 | 2.9 | 1 | – | – | 3.9 | 84 |
| 10 | 3.7 | 1 | 4.2 | 7 | 5.1 | 80 |
| 16 | 4.6 | 1 | 5.3 | 7 | 6.3 | 126 |
| 25 | – | – | 6.6 | 7 | 7.8 | 196 |
| 35 | – | – | 7.9 | 7 | 9.2 | 276 |
| 50 | – | – | 9.1 | 19 | 11 | 396 |
| | | – | | | | |
| 70 | – | – | 11 | 19 | 13.1 | 360 |
| 95 | – | – | 12.9 | 19 | 15.1 | 475 |
| 120 | – | – | 14.5 | 37 | 17 | 608 |
| 150 | – | – | 16.2 | 37 | 19 | 756 |
| 185 | – | – | 18 | 37 | 21 | 925 |
| 240 | – | – | 20.6 | 61 | 24 | 1224 |

## Current carrying capacity of cables or wires

Recommended values for the current carrying capacity of cables or wires for fixed installation and external mounting have been taken from DIN VDE 0298 part 4/11.98 together with the modifications in draft DIN VDE 0298 part 4 A1/03.00 and are contained in supplement 1 to DIN VDE 0100 part 430, converted at 25 °C.

# facts

## Current carrying capacity of DIN rail terminal blocks

The following tables apply for DIN rail terminal blocks and copper conductors:
Test currents according to DIN EN 60 947-7-1/VDE 0611 part 1: 2000-05

| Rated cross section $mm^2$ | 0.2 | 0.5 | 0.75 | 1 | 1.5 | 2.5 | 4 | 6 | 10 | 16 | 25 | 35 | 50 | 70 | 95 | 120 | 150 | 185 | 240 | 300 |
|---|---|---|---|---|---|---|---|---|---|---|---|---|---|---|---|---|---|---|---|---|
| Test current A | 4 | 6 | 9 | 13.5 | 17.5 | 24 | 32 | 41 | 57 | 76 | 101 | 125 | 150 | 192 | 232 | 269 | 309 | 353 | 415 | 520 |

The rated cross section of a DIN rail terminal block is the value indicated by the manufacturer of the connectable conductor cross section to which specific thermal, mechanical and electrical requirements refer.

The rated connecting capacity of a DIN rail terminal block is a range and/or a number of rated cross sections that the terminal block is intended for. It should be indicated for each terminal block separately.
The conductors can be rigid (solid or stranded) or flexible. The data pertains to unprepared conductor ends without ferrules and includes the largest and smallest connectable conductor cross sections.
In general it is possible to connect two conductors with the same cross section and design.

For DIN rail terminal blocks with special functions, the rated current from the manufacturer has been determined according to the requirements of the special functions. Special functions can be given by pluggable connections, isolating points, fuses, relays or electronic components. The current carrying capacity of other terminal blocks has been fixed and assessed following the above specifications according to nach EN 60 999/VDE 0609 part 1 or EN 60 998-1/VDE 0613 part 1 or
EN 60 335-1/DIN VDE 0700 part 1, as far as they are relevant.

The current carrying capacity for pluggable connectors (catalog sections ***revos*** and ***wiecon*** – for pluggable PC board connectors and headers) has been established and fixed according to DIN VDE 0627/06.86 and DIN 43 652, if applicable. Disconnect blocks, knife edged disconnect blocks and fuse blocks, cross connectors / jumper bars, jumpers and pluggable connectors should not be operated under load.

## Torques

Excerpt from EN 60 947
Tightening torques for verification of mechanical stability of screw connections

| Thread diameter (mm) | | Tightening torque (Nm) | | |
|---|---|---|---|---|
| Metric standard values | Diametrical range | I | II | III |
| 2,5 | ≤ 2,8 | 0,2 | 0,4 | 0,4 |
| 3,0 | > 2,8 through 3,0 | 0,25 | 0,5 | 0,5 |
| – | > 3,0 through 3,2 | 0,3 | 0,6 | 0,6 |
| 3,5 | > 3,2 through 3,6 | 0,4 | 0,8 | 0,8 |
| 4 | > 3,6 through 4,1 | 0,7 | 1,2 | 1,2 |
| 4,5 | > 4,1 through 4,7 | 0,8 | 1,8 | 1,8 |
| 5 | > 4,7 through 5,3 | 0,8 | 2,0 | 2,0 |
| 6 | > 5,3 through 6,0 | 1,2 | 2,5 | 3,0 |
| 8 | > 6,0 through 8,0 | 2,5 | 3,5 | 6,0 |
| 10 | > 8,0 through 10,0 | – | 4,0 | 10,0 |
| 12 | > 10,0 through 12,0 | – | – | 14,0 |
| 14 | > 12 through 15 | – | – | 19,0 |
| 16 | > 15 through 20 | – | – | 25,0 |
| 20 | > 20 through 24 | – | – | 36,0 |
| 24 | > 24 | – | – | 50,0 |

Column I: Valid on for headless screws, that do not protrude from the threaded hole; also only for screws that are operated with screwdrivers having tisp smaller than the screws' thread core diameter.

Column II: applies for nuts and screws that are tightened with a screwdriver.

Column III: applies for nuts and screws that can be tightened with tools other than a screwdriver

The recommended torques were established so that within a conforming practical tolerance band, the optimal conditions are achieved for mechanical, thermal and electrical requirements.

A further increase in the tightening torque of the terminal screw does not improve the contact resistance significantly. It is therefore not advisable to tighten the terminal screws more than recommended, although the majority of the Wieland terminal blocks, especially the terminal blocks of the WK series, can withstand much higher torques.

In extreme cases, the conductor and/or terminal block can be damaged if the upper tolerance limit is exceeded.

## Insulation coordination for equipment within low-voltage systems DIN VDE 0110-1/VDE 0110 part 1/04.97 (IEC 60 664-1: 1992, mod.) – Partly translated from German Version HD 625.1, S1: 1996

### Main section – 1.1 Scope

**1.1.1** This part of IEC 664 deals with insulation coordination for equipment within low-voltage systems . It applies to equipment for use up to 2,000 m above sea level, having a rated voltage up to AC 1,000 V with rated frequencies up to 30 kHz or a rated voltage up to DC 1,500 V.

It specifies the requirements for clearances, creepage distances and solid insulation for equipment based upon their performance criteria. It includes methods of electric testing with respect to insulation coordination.

The minimum clearances specified in this part do not apply where ionized gases occur. Special requirements for such situations may be specified at the discretion of the relevant Technical Committee.

This standard does not deal with distances
– through liquid insulation,
– through gases other than air,
– through compressed air.

NOTE 1: Extension of the scope up to 1 MHz is under consideration.

NOTE 2: Higher voltages may exist in internal circuits of the equipment.

NOTE 3: Requirements for altitudes exceeding 2,000 m can be derived from Table A.2 of Annex A.

**1.1.2** The object of this basic safety standard is to guide Technical Committees responsible for different equipment in order to rationalize their requirements so that insulation coordination is achieved.

It provides the information necessary to give guidance to Technical Committees when specifying clearances in air, creepage distances and solid insulation for equipment.

## Product description and labelling

Currently there is still a range of device specifications, in which the regulations on insulation coordination have still not been incorporated. In addition, transition periods of up to 5 years apply for reworked standards in order to replace the older standards. Thus, for the foreseeable future, there are products existing side by side that have been developed and labelled following the old design rules and those that have already been designed according to the regulations for insulation coordination.

For this reason, whereever possible and applicable, the rating is given in the product descriptions according to the old and new regulations. The reassessment and conversion of the labelling of existing products is carried out in the framework of the transition periods in accordance with economical  considerations.

The rating is given according to the new regulation in the format

**Rated voltage/Rated impulse voltage/Degree of pollution**
**e.g. 800 V/8 kV/3**

With this data, the rated impulse voltage is given priority over the overvoltage category. Therefore it is left to the users to decide which overvoltage category to select based on the requirements. If no rated voltage is indicated, the voltage data refer to overvoltage category III and degree of pollution 3.

It is imperative that the indicated wire strip lengths are observed. When connecting the wire, care must be taken that the insulation material is fed as closely as possible to the metal clamping body, as otherwise the creepage distances and clearances might be reduced.

## 2.2.2.1 Impulse withstand categories (overvoltage categories)

Impulse withstand categories are means to distinguish degrees of availability of equipment with regard to required expectations on continuity of service and on an acceptable risk of failure. By selection of impulse withstand levels of equipment, insulation coordination can be achieved in the whole installation, reducing the risk of failure to an acceptable level providing a basis for overvoltage control.

A higher characteristic numeral of an impulse withstand category indicates a higher specific impulse withstand of the equipment and offers a wider choice of methods for overvoltage control.

The concept of impulse withstand categories is used for equipment energised directly from the mains. The application of impulse withstand categories is based on the requirement with regard to additional protection against overvoltages as specified in IEC 364-4-443.

**Note:** Overvoltages of atmospheric origin are not significantly physically attenuated downstream in most installations. Investigations have shown that the concept of a probabilistic approach has proven reasonable and useful.

### 2.2.2.1.1 Equipment energized directly from the low-voltage

Technical Committees shall specify the overvoltage category as based on the following general explanation of overvoltage categories (see also IEC 364-4-443):

— Equipment of **overvoltage category IV** is for use at the origin of the installation.

**Note:** Examples of such equipment are electricity meters and primary overcurrent protection equipment

– Equipment of **overvoltage category III** is equipment in fixed installations and for cases where the reliability and the availabilty of the equipment is subject to special requirements.

**Note:** Examples of such equipment are switches, in the fixed installation and equipment for industrial use with permanent connection to the fixed installation.

– Equipment of **overvoltage category II** is energy-consuming equipment to be supplied from the fixed installation.

**Note:** Examples of such equipment are appliances, portable tools and other household and similar loads.

If such equipment is subjected to special requirements with regard to reliability and availability, overvoltage category III applies.

– Equipment of **overvoltage category I** is equipment for connection to circuits in which measures are taken to limit transient overvoltages to an appropriately low level.

**Note:** Examples are protected electronic circuits.

## 2.5 Pollution

The micro-environment determines the effect of pollution on the insulation. The macro-environment, however, has to be taken into account when considering the micro-environment.

Means may be provided to reduce pollution at the insulation under consideration by effective use of enclosures, encapsulation or hermetic sealing. Such means to reduce pollution may not be effective when the equipment is subject to condensation or if, in normal operation, it generates pollutants itself.

Small clearances can be bridged completely by solid particles, dust and water and therefore minimum clearances are specified where pollution may be present in the micro-environment.

**Note 1:** Pollution will become conductive in the presence of humidity. Pollution caused by contaminated water, soot, metal or carbon dust is inherently conductive.

**Note 2:** Conductive pollution by ionized gases and metallic depositions occurs only in specific instances, for example in arc chambers of switchgear or controlgear, and is not covered by this part of IEC 664.

### 2.5.1 Degrees of pollution in the micro-environment

For the purpose of evaluating creepage distances and clearances, the following four degrees of pollution in the micro-environment are established:

- **Pollution degree 1**
  No pollution or only dry, non-conductive pollution occurs. The pollution has no influence.
- **Pollution degree 2**
  Only non-conductive pollution occurs except that occasionally a temporary conductivity caused by condensation is to be expected.
- **Pollution degree 3**
  Conductive pollution occurs or dry, non-conductive pollution occurs which becomes conductive due to condensation which is to be expected.
- **Pollution degree 4**
  The pollution generates persistent conductivity caused by conductive dust or by rain or snow.

### 2.5.2 Coordination with macro-environment

This sub-clause is under consideration.

## 2.7 Insulation material (excerpt)

The insulation material is divided into the following four groups according to their CTI (Comparative Tracking Index):

Insulation I: $600 \leq CTI$
Insulation II: $400 \leq CTI < 600$
Insulation III a: $175 \leq CTI < 400$
Insulation III b: $100 \leq CTI < 175$

The comparative tracking index must be defined according to DIN IEC 112/VDE 0303 part 1 on specimens made specially for this purpose with test solution A.

**Note:** The proof-tracking index (PTI) is also used to identify the tracking characteristics of materials. A material may be included in one of the four groups given above on the basis that its PTI, established by the methods of IEC 112 using solution A, is equal to or greater than the lower value specified for the group.

**Derivation of the rated impulse voltage from the overvoltage category and assignment of the nominal supply voltages to the rated impulse voltages for equipment**
Excerpt from table 1 (IEC 60 664-1: 1992)

| Nominal supply voltage for alternating voltage systems according to IEC 38 in V | | Voltages wire to ground in V derived from the nominal supply voltage up to $U_{eff}$ and U_ | Rated impulse voltage in V for overvoltage category | | | |
|---|---|---|---|---|---|---|
| 3phase | 1phase | | I | II | III | IV |
| | | 50 | 330 | 500 | 800 | 1500 |
| | | 100 | 500 | 800 | 1500 | 2500 |
| | 120-240 | 150 | 800 | 1500 | 2500 | 4000 |
| 230/400 277/480[1)] | | 300 | 1500 | 2500 | 4000 | 6000 |
| 400/690 | | 600 | 2500 | 4000 | 6000 | 8000 |
| 1000 | | 1000 | 4000 | 6000 | 8000 | 12000 |

[1)] The nominal-supply voltage 500 V is included

**Dimensions of the clearances**
DIN VDE 0110 part 1 section 3.1
Table 2: **Minimum clearances for the insulation coordination**

| Required impulse voltage[1] | Minimum clearances in heights up to 2000 m above sea level (NZ) | | | | | | | |
|---|---|---|---|---|---|---|---|---|
| | Case A (inhomogeneous field, see 1.3.15) | | | | Case B (homogeneous field, see 1.3.14) | | | |
| | Degree of pollution | | | | Degree of pollution | | | |
| | 1 | 2 | 3 | 4 | 1 | 2 | 3 | 4 |
| kV | mm | mm | mm | mm | mm | mm | mm | mm |
| 0.33[2] | 0.01 | | | | 0.01 | | | |
| 0.40 | 0.02 | | | | 0.02 | | | |
| 0.50[2] | 0.04 | [3] | | | 0.04 | [3] | | |
| 0.60 | 0.06 | 0.2[4] | | | 0.06 | 0.2[4] | | |
| 0.80[2] | 0.10 | | 0.8[4] | | 0.1 | | | |
| 1.0 | 0.15 | | | 1.6[4] | 0.15 | | 0.8[4] | |
| 1.2 | 0.25 | 0.25 | | | 0.2 | | | 1.6[4] |
| 1.5[2] | 0.5 | 0.5 | | | 0.3 | 0.3 | | |
| 2.0 | 1.0 | 1.0 | 1.0 | | 0.45 | 0.45 | | |
| 2.5[2] | 1.5 | 1.5 | 1.5 | | 0.6 | 0.6 | | |
| 3.0 | 2 | 2 | 2 | 2 | 0.8 | 0.8 | | |
| 4.0[2] | 3 | 3 | 3 | 3 | 1.2 | 1.2 | 1.2 | |
| 5.0 | 4 | 4 | 4 | 4 | 1.5 | 1.5 | 1.5 | |
| 6.0[2] | 5.5 | 5.5 | 5.5 | 5.5 | 2 | 2 | 2 | 2 |
| 8.0[2] | 8 | 8 | 8 | 8 | 3 | 3 | 3 | 3 |
| 10 | 11 | 11 | 11 | 11 | 3.5 | 3.5 | 3.5 | 3.5 |
| 12[2] | 14 | 14 | 14 | 14 | 4.5 | 4.5 | 4.5 | 4.5 |
| 15 | 18 | 18 | 18 | 18 | 5.5 | 5.5 | 5.5 | 5.5 |
| 20 | 25 | 25 | 25 | 25 | 8 | 8 | 8 | 8 |
| 25 | 33 | 33 | 33 | 33 | 10 | 10 | 10 | 10 |
| 30 | 40 | 40 | 40 | 40 | 12.5 | 12.5 | 12.5 | 12.5 |
| 40 | 60 | 60 | 60 | 60 | 17 | 17 | 17 | 17 |
| 50 | 75 | 75 | 75 | 75 | 22 | 22 | 22 | 22 |
| 60 | 90 | 90 | 90 | 90 | 27 | 27 | 27 | 27 |
| 80 | 130 | 130 | 130 | 130 | 35 | 35 | 35 | 35 |
| 100 | 170 | 170 | 170 | 170 | 45 | 45 | 45 | 45 |

[1] This voltage is
– for functional insulation: the highest impulse voltage to be expected on the clearance (see 3.1.4);
– for base insulation, if directly or mainly influenced by transient overvoltages of the low-voltage network (see 2.2.2.2, 2.2.2.3.1 and 3.1.5): the rated impulse voltage of the equipment;
– for other base insulation (see 2.2.2.3.2): the highest impulse voltage which may occur in the circuit
– for reinforced insulation, see 3.1.5.
[2] Preferred values, as determined in 2.1.1.2
[3] For PC board connectors, the values of pollution degree 1 apply, except for the fact that the value must not be below 0.04 mm as determined in table 4
[4] The minimum clearances for the pollution degrees 2, 3 and 4 are based on experience, not on basic knowledge

Table A.2: **Height correction factors**

| Height m | Normal air pressure kPa | Multiplication factor for clearances |
|---|---|---|
| 2 000 | 80.0 | 1.00 |
| 3 000 | 70.0 | 1.14 |
| 4 000 | 62.0 | 1.29 |
| 5 000 | 54.0 | 1.48 |
| 6 000 | 47.0 | 1.70 |
| 7 000 | 41.0 | 1.95 |
| 8 000 | 35.5 | 2.25 |
| 9 000 | 30.5 | 2.62 |
| 10 000 | 26.5 | 3.02 |
| 15 000 | 12.0 | 6.67 |
| 20 000 | 5.5 | 14.50 |

## Nominal voltage of the low-voltage network

Table 3a: **Single phase 3 or 2 wire alternating or direct voltage systems**

| Nominal voltage of the power supply system (network)*) | Voltages for table 4 | |
|---|---|---|
| | for insulation Wire – Wire[1)] | for insulation Wire – Ground[1)] |
| | All systems | 3 wire systems center grounded |
| V | V | V |
| 12.5 | 12.5 | – |
| 24<br>25 | 25 | – |
| 30 | 32 | – |
| 42<br>48<br>50,**) | 50 | – |
| 60 | 63 | – |
| 30–60 | 63 | 32 |
| 100,**) | 100 | – |
| 110<br>120 | 125 | – |
| 150,**) | 160 | – |
| 220, | 250 | – |
| 110–220<br>120–240 | 250 | 125 |
| 300,**) | 320 | – |
| 220–440 | 500 | 250 |
| 600,**) | 630 | – |
| 480–960 | 1000 | 500 |
| 1000,**) | 1000 | – |

1) Wire-ground insulation level for ungrounded or impedance-grounded networks equal those of wire-wire, as the operating voltage of each wire to ground can in practice reach wire-wire voltage. The reason is that the actual voltage to ground is determined by the insulation resistance and the capacitive blind resistance of each wire to ground. That means that a low (but permissible) insulation resistance of a wire can practically ground it and increase the other two to wire-wire voltage to ground.

*) For relation with the rated voltage see 2.2.1.

**) (see national foot note)

Table 3b: **Three-phase 4 or 3 wire alternating voltage systems**

| Nominal voltage of the power supply system (network)*) | Voltage for table 4 | | |
|---|---|---|---|
| | for insulation Wire – Wire | for insulation Wire – Ground | |
| | All systems | Three-phase 4 wire systems with grounded neutral[2)] | Three-phase 3 wire systems ungrounded[1)] or grounded wire |
| V | V | V | V |
| 60 | 63 | 32 | 63 |
| 110<br>120<br>127 | 125 | 80 | 125 |
| 150,**) | 160 | – | 160 |
| 208 | 200 | 125 | 200 |
| 220<br>230<br>240 | 250 | 160 | 250 |
| 300,**) | 320 | – | 320 |
| 380<br>400<br>415 | 400 | 250 | 400 |
| 440 | 500 | 250 | 500 |
| 480<br>500 | 500 | 320 | 500 |
| 575 | 630 | 400 | 630 |
| 600,**) | 630 | – | 630 |
| 660<br>690 | 630 | 400 | 630 |
| 720<br>830 | 800 | 500 | 800 |
| 960 | 1000 | 630 | 1000 |
| 1000,**) | 1000 | – | 1000 |

1) Wire-ground insulation level for ungrounded or impedance grounded networks equal those of wire-wire, as the operating voltage of each wire to ground can in practice reach wire-wire voltage. The reason is that the actual voltage to ground is determined by the insulation resistance and the capacitive blind resistance of each wire to ground. That means that a low (but permissible) insulation resistance of a wire can practically ground it and increase the other two to wire-wire voltage to ground.

2) For equipment which can be operated both in three-phase 4 wire and in three-phase 3 wire networks, grounded and also ungrounded, only the values for 3 wire systems are to be used.

*) For relation with the rated voltage see 2.2.0.1.

**) (see national foot note)

**Dimensions of the creepage distances**

DIN VDE 0110 part 1 section 3.2

Table 4: **Minimum creepage distances for equipment under long-term voltage**

| Effective voltage value [1] | Creepage distances | | | | | | | | | | | |
|---|---|---|---|---|---|---|---|---|---|---|---|---|
| | Printed circuits | | Degree of pollution | | | | | | | | | |
| | Pollution degree | | 1 | 2 | | | 3 | | | 4 | | |
| | 1 | 2 | | Insulation material | | | Insulation material | | | Insulation material | | |
| | [2] | [3] | [2] | I | II | III | I | II | III[4] | I | II | III[4] |
| V | mm | mm | mm | mm | mm | mm | mm | mm | mm | mm | mm | mm |
| 10 | 0.025 | 0.04 | 0.08 | 0.4 | 0.4 | 0.4 | 1 | 1 | 1 | 1.6 | 1.6 | 1.6 |
| 12.5 | 0.025 | 0.04 | 0.09 | 0.42 | 0.42 | 0.42 | 1.05 | 1.05 | 1.05 | 1.6 | 1.6 | 1.6 |
| 16 | 0.025 | 0.04 | 0.1 | 0.45 | 0.45 | 0.45 | 1.1 | 1.1 | 1.1 | 1.6 | 1.6 | 1.6 |
| 20 | 0.025 | 0.04 | 0.11 | 0.48 | 0.48 | 0.48 | 1.2 | 1.2 | 1.2 | 1.6 | 1.6 | 1.6 |
| 25 | 0.025 | 0.04 | 0.125 | 0.5 | 0.5 | 0.5 | 1.25 | 1.25 | 1.25 | 1.7 | 1.7 | 1.7 |
| 32 | 0.025 | 0.04 | 0.14 | 0.53 | 0.53 | 0.53 | 1.3 | 1.3 | 1.3 | 1.8 | 1.8 | 1.8 |
| 40 | 0.025 | 0.04 | 0.16 | 0.56 | 0.8 | 1.1 | 1.4 | 1.6 | 1.8 | 1.9 | 2.4 | 3 |
| 50 | 0.025 | 0.04 | 0.18 | 0.6 | 0.85 | 1.2 | 1.5 | 1.7 | 1.9 | 2 | 2.5 | 3.2 |
| 63 | 0.04 | 0.063 | 0.2 | 0.63 | 0.9 | 1.25 | 1.6 | 1.8 | 2 | 2.1 | 2.6 | 3.4 |
| 80 | 0.063 | 0.1 | 0.22 | 0.67 | 0.95 | 1.3 | 1.7 | 1.9 | 2.1 | 2.2 | 2.8 | 3.6 |
| 100 | 0.1 | 0.16 | 0.25 | 0.71 | 1 | 1.4 | 1.8 | 2 | 2.2 | 2.4 | 3 | 3.8 |
| 125 | 0.16 | 0.25 | 0.28 | 0.75 | 1.05 | 1.5 | 1.9 | 2.1 | 2.4 | 2.5 | 3.2 | 4 |
| 160 | 0.25 | 0.4 | 0.32 | 0.8 | 1.1 | 1.6 | 2 | 2.2 | 2.5 | 3.2 | 4 | 5 |
| 200 | 0.4 | 0.63 | 0.42 | 1 | 1.4 | 2 | 2.5 | 2.8 | 3.2 | 4 | 5 | 6.3 |
| 250 | 0.56 | 1 | 0.56 | 1.25 | 1.8 | 2.5 | 3.2 | 3.6 | 4 | 5 | 6.3 | 8 |
| 320 | 0.75 | 1.6 | 0.75 | 1.6 | 2.2 | 3.2 | 4 | 4.5 | 5 | 6.3 | 8 | 10 |
| 400 | 1 | 2 | 1 | 2 | 2.8 | 4 | 5 | 5.6 | 6.3 | 8 | 10 | 12.5 |
| 500 | 1.3 | 2.5 | 1.3 | 2.5 | 3.6 | 5 | 6.3 | 7.1 | 8 | 10 | 12.5 | 16 |
| 630 | 1.8 | 3.2 | 1.8 | 3.2 | 4.5 | 6.3 | 8 | 9 | 10 | 12.5 | 16 | 20 |
| 800 | 2.4 | 4 | 2.4 | 4 | 5.6 | 8 | 10 | 11 | 12.5 | 16 | 20 | 25 |
| 1 000 | 3.2 | 5 | 3.2 | 5 | 7.1 | 10 | 12.5 | 14 | 16 | 20 | 25 | 32 |
| 1 250 | | | 4.2 | 6.3 | 9 | 12.5 | 16 | 18 | 20 | 25 | 32 | 40 |
| 1 600 | | | 5.6 | 8 | 11 | 16 | 20 | 22 | 25 | 32 | 40 | 50 |
| 2 000 | | | 7.5 | 10 | 14 | 20 | 25 | 28 | 32 | 40 | 50 | 63 |
| 2 500 | | | 10 | 12.5 | 18 | 25 | 32 | 36 | 40 | 50 | 63 | 80 |
| 3 200 | | | 12.5 | 16 | 22 | 32 | 40 | 45 | 50 | 63 | 80 | 100 |
| 4 000 | | | 16 | 20 | 28 | 40 | 50 | 56 | 63 | 80 | 100 | 125 |
| 5 000 | | | 20 | 25 | 36 | 50 | 63 | 71 | 80 | 100 | 125 | 160 |
| 6 300 | | | 25 | 32 | 45 | 63 | 80 | 90 | 100 | 125 | 160 | 200 |
| 8 000 | | | 32 | 40 | 56 | 80 | 100 | 110 | 125 | 160 | 200 | 250 |
| 10 000 | | | 40 | 50 | 71 | 100 | 125 | 140 | 160 | 200 | 250 | 320 |

[1] This voltage is
- for functional insulation: the operating voltage
- for base and additional insulation of a power circuit directly supplied by the low-voltage network (see 2.2.1.1.1): the voltage selected from table 3a or 3b based on the rated voltage of the equipment, or the rated insulation voltage
- for base and additional insulation of systems, equipment and internal circuits, which are not directly supplied by the low-voltage network (see 2.2.1.1.2): the highest effective voltage value, which may occur among the ratings in the network, equipment or internal circuit under rated voltage supply and under unfavorable combination of the operating conditions

[2] Insulation material groups I, II, IIIa and IIIb

[3] Insulation material groups I, II and IIIa

[4] Insulation material group IIIb is not recommended for pollution degree 3 at voltages above 630 V and also not for pollution degree 4.

**Note:** In agreement with VDE 0110 for rated voltages
127, 208, 415, 660/690, 830 volt creepage distances must be rated according to the lower values of
125, 200, 400, 630, 800 Volts.

## Creepage distances and clearances according to DIN VDE 0110 b/02.79

| Reference voltage (table 1) up to | | Insulation group $A_o$ | | Insulation group A | | Insulation group B | | | Insulation group C | | | Insulation group D | | |
|---|---|---|---|---|---|---|---|---|---|---|---|---|---|---|
| Alternating voltage (effective values) V | Direct voltage V | Clearance L mm | Creepage distance mm | Clearance L mm | Creepage distance mm | Clearance L mm | Creepage distance a mm | b mm | Clearance L mm | Creepage distance a mm | b mm | Clearance L mm | Creepage distance a mm | b mm |
| 12 | 15 | 0.06 | 0.1 | 0.15 | 0.2 | 0.4 | 0.6 | 0.8 | 0.8 | 1.2 | 1.7 | 1.6 | 2.3 | 3.2 |
| 30 | 36 | 0.1 | 0.15 | 0.2 | 0.25 | 0.5 | 0.8 | 1 | 1 | 1.5 | 2 | 1.8 | 2.6 | 3.5 |
| 60 | 75 | 0.15 | 0.2 | 0.25 | 0.35 | 0.7 | 1 | 1.3 | 1.2 | 1.7 | 2.3 | 2 | 3 | 4 |
| 125 | 150 | 0.25 | 0.35 | 0.4 | 0.5 | 1 | 1.3 | 2 | 1.6 | 2.2 | 3 | 2.5 | 3.5 | 5 |
| 250 | 300 | 0.5 | 0.7 | 0.8 | 1 | 1.6 | 2 | 3 | 2.5 | 3 | 4 | 3.5 | 5 | 7.5 |
| 380 | 450 | 0.8 | 1.1 | 1.2 | 1.5 | 2.4 | 3 | 4 | 3.5 | 4.5 | 6 | 5 | 7 | 10 |
| 500 | 600 | 1.1 | 1.5 | 1.6 | 2 | 3 | 4 | 5.5 | 4.5 | 6 | 8 | 6.5 | 9 | 13 |
| 660 | 800 | 1.5 | 2 | 2.2 | 2.8 | 4 | 5.5 | 7 | 6 | 8 | 10.5 | 8 | 12 | 17 |
| 750 | 900 | 1.8 | 2.2 | 2.5 | 3.2 | 4.5 | 6 | 8 | 6.5 | 9 | 12 | 9 | 13 | 19 |
| 1000 | 1200 | 2.5 | 3 | 3.5 | 4.5 | 6 | 8 | 11 | 9 | 12 | 16 | 12 | 17 | 25 |
| 1500 | 1800 | 4 | 5 | 5.5 | 7 | 9 | 12 | 17 | 13 | 18 | 24 | 17 | 25 | 36 |
| 2000 | 2400 | 5.5[1] | 7 | 7.5[1] | 9.5 | 12 | 16 | 23 | 17 | 24 | 30 | 22 | 33 | 47 |
| 3000 | 3600 | 9[1] | 11 | 12[1] | 15 | 18[1] | 25 | 36 | 26[1] | 36 | 45 | 32[1] | 48 | 70 |
| 6000 | 7200 | 20[1] | 25 | 26[1] | 32 | 36[1] | 50 | 70 | 50[1] | 70 | 90 | 60[1] | 90 | 125 |
| 10000 | 12000 | 35[1] | 45 | 45[1] | 55 | 60[1] | 90 | 120 | 80[1] | 120 | 160 | 100[1] | 150 | 200 |

[1] To prevent continuous glow at operating voltage (reference voltage) sharp-edged metal components should be avoided.
(W. Hermstein: Measuring clearances, especially for 50 Hz alternating voltage.
etz-a 90 (1969) 11, pages 251 to 255, 9B., 11 Qu

**Insulation group $A_O$:** Lower-power equipment in air-conditioned or clean and dry rooms that is suitably protected and heats up minimally when short circuits occur

**Insulation group A:** Electrical equipment in air-conditioned or clean and dry rooms that is suitably protected

**Insulation group B:** Electrical equipment in households, stores and other commercial premises, in precision engineering workshops, laboratories, testing stations, in rooms for medical use etc.

**Insulation group C:** Electrical equipment used primarily in premises for industrial, commercial and agricultural use, in unheated warehouses, in workshops, in boiler rooms, machine tools etc.

**Insulation group D:** Electrical equipment for use in motor vehicles that are particularly subject to the effects of conductive brake dust and moisture (condensation water or snow) and cannot be sufficiently protected by casing.

### Division of creepage distances

Table 3: **Resistance to creepage**

| 1 | 2 | 3 | 4 |
|---|---|---|---|
| Group | Resistance to creepage[1] (minimum value) | Creepage distance without ripple | Creepage distance with ripple accord. to § 8a) |
| I | (minimum value) KB 100 | b | $\frac{a + b}{2}$ |
| II | (minimum value) KB 380 | $\frac{a + b}{2}$ | a |
| III | KB > 600 | a | a |

[1] Steps of creepage resistance according to DIN 53 480, VDE 0303 part 1

**Note:**
The voltages given acoording to DIN VDE 0110 b/02.79 refer, unless otherwise identified, to insulation group C.

# facts

## Degrees of protection according to DIN EN 60 529/ VDE 0470 part 1: 2000 – 09

Connecting devices such as modular terminals, connecting terminals, printed circuit board terminals and plug-in connectors etc., intended for mounting devices and installation that have no shock-protection housing in the sense of this standard. No IP protection category can thus be assigned to it. The insulating component is used in the first place for functional insulation, but can in addition offer protection against direct contact of active components e.g. safety finger contact and/or touch by the back of the hand. Its surface is not regarded as exposed. The definitive shock protection is secured by installation measures and by the external protective covering of the end device of the installation.

## Identification examples using the IP code

### Explanation of Alpha-numeric IP code system

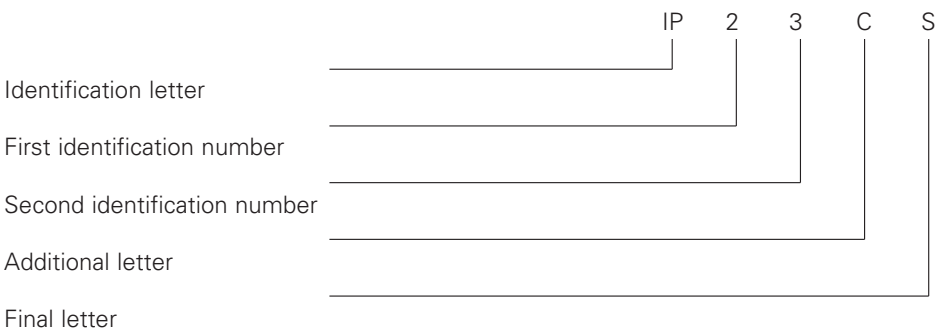


A housing using this identification (IP code)

2 – protects people against access to dangerous components (touch-safe)
– protects the equipment within the housing against ingress of solid foreign bodies with a diameter of 12.5 mm and larger

3 – protects the equipment within the housing against damaging effects of water that is sprayed from every direction against the housing

C – protects people who are handling tools with a diameter of 2.5 mm and larger, and a length less than 100 mm, against access to dangerous components (the tool can be inserted into the housing at full length)

S – is tested to provide protection against damaging effects of water ingress, while all components of the equipment are in standstill position

### Components of the IP code and its meaning

A short description of the IP code components is given in the following table:

| Component | Figures or letter | Meaning for the protection of the equipment | Meaning for the protection of people: |
|---|---|---|---|
| Identification letter | IP | – | – |
| First identification number | | against ingress of solid foreign bodies | against access to dangerous components with |
| | 0 | (unprotected) | (unprotected) |
| | 1 | ≥ 50 mm diameter | back of hand |
| | 2 | ≥ 12.5 mm diameter | finger |
| | 3 | ≥ 2.5 mm diameter | tool |
| | 4 | ≥ 1.0 mm diameter | wire |
| | 5 | protected against dust | wire |
| | 6 | dustproof | wire |
| Second identification number | | against ingress of water with damaging effects | |
| | 0 | (unprotected) | |
| | 1 | dripping water falling vertically | |
| | 2 | dripping water (15° slope) | |
| | 3 | spraying water | |
| | 4 | splashing water | |
| | 5 | jet water | |
| | 6 | powerful jet water | |
| | 7 | temporary submersion | |
| | 8 | continuous submersion | |

Table 1: **Degrees of protection against access to dangerous components, identified by the first identification number**

| First identification number | Degree of protection: Brief description | Degree of protection: Definition |
|---|---|---|
| 0 | unprotected | – |
| 1 | protected against access to dangerous components with the back of the hand | The access probe, 50 mm diameter sphere, must be a sufficient distance away from the dangerous components |
| 2 | protected against access to dangerous components with a finger | The jointed test finger, 12 mm in diameter, 80 mm in length, must be a sufficient distance away from the dangerous components |
| 3 | protected against access to dangerous components with a tool | The access probe with a diameter of 2.5 mm must not penetrate |
| 4 | protected against access to dangerous components with a wire | The access probe with a diameter of 1.0 mm must not penetrate |
| 5 | protected against access to dangerous components with a wire | The access probe with a diameter of 1.0 mm must not penetrate |
| 6 | protected against access to dangerous components with a wire | The access probe with a diameter of 1.0 mm must not penetrate |

**Note:** For the first identification numbers 3, 4, 5 and 6 protection against access to dangerous components is provided if a sufficient distance is maintained. Due to the simultaneously applicable requirement according to table 2, the definition "must not penetrate" was given in table 1.

Table 2: **Degrees of protection against solid foreign bodies**

| First identification number | Degree of protection | |
|---|---|---|
| | Brief description | Definition |
| 0 | unprotected | – |
| 1 | protected against solid foreign bodies of 50 mm and larger | Full penetration of spheres of 50 mm diameters or allowed*) |
| 2 | protected against solid foreign bodies of 12.5 mm and larger | Full penetration of spheres of 12.5 mm diameters or allowed*) |
| 3 | protected against solid foreign bodies of 2.5 mm and larger | Full penetration of 2.5 mm diameter sphere is not allowed at all*) |
| 4 | protected against solid foreign bodies of 1.0 mm and larger | Full penetration of 1.0 mm diameter sphere is not allowed at all*) |
| 5 | protected against dust | Penetration of dust is not fully prevented, but dust must not penetrate to such an extent that the satisfactory functioning of the device or safety is restricted in any way |
| 6 | protected against dust | No penetration of dust |

*) **Note:** The full diameter of the object probe must not go through any opening in the housing

Table 4: **Degrees of protection against access to dangerous components, identified by the additional letter**

| First identification number | Degree of protection | | Test conditions see section |
|---|---|---|---|
| | Brief description | Definition | |
| A | protected against touch with the back of hand | The access probe, 50 mm diameter sphere, must be at a sufficient distance away from dangerous components | 15.2 |
| B | protected against touch with the finger | The jointed test finger, 12 mm in diameter, 80 mm in length, sufficient distance away from dangerous components | 15.2 |
| C | protected against access with a tool | The access probe with a diameter of 2.5 mm and a length of 100 mm must be a sufficient distance away from dangerous components | 15.2 |
| D | protected against access with a wire | The access probe with a diameter of 1.0 mm and a length of 100 mm must be a sufficient distance away from dangerous components | 15.2 |

Table 3: **Degree of protection against water, identified by the second identification number**

| Second identification number | Degree of protection | |
|---|---|---|
| | Brief description | Definition |
| 0 | unprotected | – |
| 1 | protected against dripping water | Dripping water falling vertically must not have a damaging effect |
| 2 | protected against dripping water if the housing is sloped up to 15° | Dripping water falling vertically must not have a damaging effect if the housing is sloped by an angle of up to 15° both sides of the vertical |
| 3 | protected against spraying water | Water that is sprayed at an angle of 60° both sides of the vertical must not have any damaging effect |
| 4 | protected against splashing water | Water that is sprayed from all directions against the housing must not have any damaging effect |
| 5 | protected against jet water | Water that is directed from all directions as a jet against the housing must not have any damaging effect |
| 6 | protected against powerful jet water | Water that is directed from all directions as a powerful jet against the housing must not have any damaging effect |
| 7 | protected against the effects of temporary immersion in water | Water must not penetrate in a quantity to cause damage if the housing is immersed temporarily in water under standard pressure and time conditions |
| 8 | protected against the effects of continuous immersion in water | Water must not penetrate in a quantity to cause damage if the housing is continuously immersed in water conditions that must be arranged between the manufacturer and the user. The conditions must however be more severe than for identification number 7. |

**Degree of protection against water, identified by the second identification number**
The second identification number gives the protection category through housing in light of damaging influences on the electrical equipment following penetration of water.

Table 3 gives short descriptions and definitions for the degrees of protection that are represented by the second identification number .

Degrees of protection that are given in this table may only be determined by the second identification number and not by reference to the short description or definition. Until the second identification number 6, the designation means that the requirements for all the lower identification numbers have been fulfilled.

A housing that is identified only with the second identification number 7 or 8 is considered unsuitable for stress through jet water (identified with the second identification number 5 or 6) and does not need to meet the requirements of number 5 or 6. It should be provided with a double identification according to the following table:

| The housing complies with the test for | | | |
|---|---|---|---|
| jet water,<br>second identification number | temporary/continuous immersion,<br>second identification number | Identification and label | Field of application |
| 5 | 7 | IPX5 / IPX7 | varied |
| 6 | 7 | IPX6 / IPX7 | varied |
| 5 | 8 | IPX5 / IPX8 | varied |
| 6 | 8 | IPX6 / IPX8 | varied |
| | 7 | IPX7 | limited |
| | 8 | IPX8 | limited |

Housings for “varied” use, as indicated in the last column, must meet the requirements both for exposure to jet water and temporary or continuous immersion in water.

Housings for “limited” use, as indicated in the last column, are only regarded as suitable for temporary or continuous immersion and as unsuitable for exposure to jet water.

# Modular terminals for installations with explosion hazard (Ex terminals) Protection category "Increased safety Eex e"

Ex terminals are modular terminals that have been tested and certified by a European Ex test institute in accordance with

**DIN EN 50 014 – VDE 0171 part 1**
**"General requirements" and**

**DIN EN 50 019 – VDE 0170/0171 part 6**
**"Protection category: Increased safety 'e' "**

The protection category "Increased safety EEx e" applies to electrical equipment that resists sparks, electric arcing or hazardous surface temperatures during operation. Modular terminals thus fall into temperature category T6, in which electrical equipment at an ambient temperature of 40°C and being operated in compliance with regulations, does not exceed the maximum temperature (surface temperature) of 85°C. Certified test institutes are e.g. the Physikalisch Technische Bundesanstalt PTB in Germany, the Laboratoire Central des Industries Electrique LCIE in France, the Health and Safety Executive BASEEFA in England, the EX-Labor of ASEV in Switzerland amongst others.

However, for modular terminals used as incomplete electrical equipment, only a partial certification is issued. This certificate is the basis for the final inspection and certification of the complete installation before it is commissioned by an expert.

The certificate (partial certification) includes a description of the modular terminals, in which special requirements regarding the preparation of terminal strips are made e.g. installing separating end cover plates when modular terminals are connected in series.

## Test Certificate

Certificates from LCIE and ASEV are available for feed through terminals of the WK... range and protective conductor terminals of the WK...SL.. range, if indicated. The certificates identify the relevant nominal data and include the accessories listed in the description. The areas of application are divided into:

**Group I: Electrical equipment for mines with firedamp hazard**
**Group II: Electrical equipment for areas with explosion hazard except for mines with firedamp hazard (e.g. installations with explosion hazard for the chemical and petrochemical industries)**

In accordance with a resolution of the DKE, Deutsche Elektrotechnische Kommission, terminals are also accepted as electrical equipment for Group I (firedamp protection Eex e I) for which only the increased safety protection type 'e' for Group II (explosion protection Eex e II) has been certified and vice versa.

Modular terminals with Ex protection are identified with the label EEx e I/II or EEx e II and with the approval number. The complete test certification with a description is available upon request.

**Protection category "Intrinsic safety Eex i"**

According to the installation specification DIN VDE 0165, electrical equipment installed in areas with explosion hazard of group II, zone I (chemical and petrochemical industries) are excluded from the type test and obligatory marking, if they do not contain any voltage source and correspond to DIN EN 50020-VDE 0170/0171 part 7. This applies in particular to feed through terminals in the standard version, as DIN EN 50020 does not make any special demands on connector terminals of the protection category Eex i.

It has been generally accepted that feed through terminals in intrinsically safe circuits are clearly marked with the blue coloring of the insulated housing. For intrinsically safe circuits, feed through terminals can be used in the standard version and if required available with blue insulating housing.

**EEx approvals according to the ATEX guideline – 94/9/EG**

(ATEX = Atmospheres Explosibles) are currently being prepared.
This guideline aims at clarifying the procedures and applications of devices, components and protective systems to make them suitable for use in explosion hazard areas. Their proper use shall then help to eliminate the barriers and difficulties that occur in the free exchange of goods within the European Community.
The transition period between EEx approvals and the ATEX guideline will last until June 30, 2003.

## DIN VDE 0106 part 100: 1983 – 03
## Protection against electrical shock. Layout of operating devices near live components

The standard cited in the **Accident Prevention Regulation VBG 4** is seen as the basis for the layout of electrical equipment up to 1000 V ~ (1500 V ⎓) as regards protection against direct contact,where operating devices are arranged near live components that are operated by at least electrotechnically instructed persons (occasional handling).

A protected zone is established for this purpose which must be reached into on "occasional handling" of the operating device (switch, push button, rotary button). A distance of

– 30 mm around the operating device "safety from finger touch" and
– 100 mm around the operating device "safety from touch by the back of the hand"

is designed and required.

The VBG 4 regulation is directed at the installer or user of electrical installations who must plan, build and finally operate the installation in accordance with accident prevention regulations. The installer has the task of selecting electrical equipment with the objective and if necessary making it safe to touch using accessories. Only he can confirm that his installation conforms to the accident prevention regulation VBG4.

Wieland develops, builds and tests its products according to the relevant equipment and safety regulations that are likewise cited in regulation VBG4 and moreover offers a range of accessories that takes this requirement into account.

# Standards and specifications

facts & DATA

**Range of standards DIN VDE 0100**
Installation of power systems and equipment with nominal voltages up to 1,000 V

This VDE regulation is a regulation for installations but also contains important details for the manufacturer of equipment and components such as permissible loads for cables, the use of protective conductor terminals and neutral conductor isolating terminals.

**DIN EN 50 110-1/VDE 0105 part 1: 10.97**
Operation of power systems and equipment

**DIN VDE 0106-100/VDE 0106 part 100: 03.83**
Protection against electric shock;
Actuating members positioned close to parts liable to shock (VDE Specifications)

**DIN VDE 0106-101/VDE 0106 part 101: 11.86**
Protection against electric shock;
Basis requirements for protective separation in electrical equipment

**DIN VDE 0108-1/VDE 0108 part 1: 10.89**
Power systems and safety power supply in building installations for groups of people; general

**DIN VDE 0110/11.72 und**
**DIN VDE 0110 b/02.79** **withdrawn!**
Insulation coordination for electrical equipment in low-voltage installations
- Measurement of creepage distances and clearances

**DIN VDE 0110-1/VDE 0110 part 1: 04.97**
(IEC 60 664-1: 1992, modified)
HD 625.1 S1: 1996
– Basic principles, requirements and tests

**DIN EN 60 204 1/VDE 0113 part 1: 11.98**
(IEC 60 204-1: 1992, modified)
Electrical equipping of machines; part 1: general requirements

**DIN EN 50 178/VDE 0160: 04.98**
Equipping of power installations with electronic equipment

**DIN VDE 0165: 02.91**
Installation of electrical systems and equipment in areas with explosion hazard

**DIN EN 60 079-14/VDE 0165 part 1: 08.98**

**EN 50 014: 1992/DIN VDE 0170/0171 part 1: 03.94 withdrawn**
Electrical equipment for areas with explosion hazard; general specifications

**DIN EN 50014/VDE 0170/0171 part 1: 02.00**

**DIN EN 50 019: VDE 0170/0171 part 6: 03.96**
Electrical equipment for areas with explosion hazard; increased safety "e"

**DIN EN 50 020: VDE 0170/0171 part 7: 04.96**
Electrical equipment for areas with explosion hazard; intrinsic safety "i"

**DIN EN 60 529: VDE 0470 part 1: 09.00**
(IEC 60 529: 1989, +A: 1999)
Protection categories by housing (IP code)

**DIN VDE 0606: 02.76 and**
**DIN VDE 0606 b: 02.80** **withdrawn***
VDE specification for connecting devices up to 750 V
Installation consumer units and meter mounting boards up to 250 V

**DIN VDE 0606 part 1: 11.84 withdrawn***
Connecting devices up to 660 V; installation boxes for taking up devices and/or connecting terminals

**DIN VDE 0609 part 1: 06.83 partly replaced by DIN EN 60999-1/VDE 0609 part 1: 12.00**
Connecting points for screw terminals for connecting or linking copper conductors up to 240 $mm^2$;
general definitions

**DIN EN 60 999: VDE 0609 part 1: 12.00**
(IEC 60 999: 1999)
Connecting devices, safety requirements for screw terminal connections and screwless terminal connections for electrical copper conductors

**DIN EN 60 947-7-1: VDE 0611 part 1: 05.00**
(IEC 60 947-7-1: 1989)
Low-voltage switching devices
Part 7: Auxiliary equipment
Main section 1 – modular terminals for copper conductors

**DIN EN 60 947-7-2: VDE 0611 part 3: 06.96**
(IEC 60 947-7-2: 1995)
Low-voltage switching devices
Part 7: Auxiliary devices
Main section 2 – ground conductor terminals for copper conductors

**DIN VDE 0611 part 3: 11.89 withdrawn, replaced by DIN EN 60 947-7-2/VDE 0611 part 3: 06.96**
(transition period until 01.07.2001)
Modular terminals for connecting or linking copper conductors, protective conductive modular terminals up to 120 $mm^2$

**DIN VDE 0611-4/VDE 0611 part 4: 02.91**
Modular terminals for connecting or linking copper conductors;
multi-tier distribution board for modular terminals up to 6 $mm^2$

**E DIN VDE 0611-6/VDE 0611 part 6: 05.95**
Modular terminals for copper conductors
Safety requirements for modular terminals for taking up fuse units

**DIN VDE 0611-20/VDE 0611 part 20: 12.87**
Modular terminal blocks for connection of copper conductors up to 1000 V a.c. and up to 1200 V d.c.;
test for flammability and flame propagation

**DIN EN 60 998-1/VDE 0613-1: 04.94**
(IEC 60 998-1: 1990, modified)
Connecting devices for low-voltage circuits for household and similar use
Part 1: General requirements

**DIN EN 60 998-2-1/VDE 0613 part 2-1: 04.94**
(IEC 60 998-2-1: 1990, modified)
Connecting devices for low-voltage circuits for household and similar use
Part 2-1: Special requirements for connecting devices as separate equipment and screw terminals

**DIN EN 60 998-2-2/VDE 0613 part 2-2: 08.94**
(IEC 60 998-2-2: 1991)
Connecting devices for low-voltage circuits for household and similar use
Part 2-2: Special requirements for connecting devices as separate equipment and screwless terminals



***replaced by DIN VDE 0606-1/VDE 0606 part 1: 10.00**
connecting devices up to 690 V – installation boxes for taking up devices and/or connecting terminals

**DIN EN 60 998-2-3/VDE 0613 part 2-3: 09.94**
(IEC 60 998-2-3: 1991)
Connecting devices for low-voltage circuits for household and similar use
Part 2-3 : Special requirements for connecting devices as separate equipment and IDC terminals

**DIN EN 61 210/VDE 0613 part 6: 09.95**
(IEC 61 210: 1993 modified)
Connecting devices
Flat push-on connection for electrical copper conductors; safety requirements

**DIN EN 50 262/VDE 0619: 04.99**
Metric cable glands for electrical installations; German version EN 50262: 1998

**DIN EN 60 320-1/VDE 0625 part 1: 07.97**
(IEC 60 320-1: 1994, modified + A1: 1995)
Appliance couplers for household and and similar general use

**DIN EN 60 320-1 A2/VDE 0625 part 1 A2: 10.98**
(IEC 60 320-1: 1994/A2: 1996)
Modification no. 2

**DIN EN 60 320-2-2/VDE 0625 part 2-2: 09.99**
(IEC 60 320-2-2: 1990, modified)
Appliance couplers for household and and similar general use
Part 2: Remote connections for devices for household use and similar installations

**DIN EN 60 799/VDE 0626: 06.99**
(IEC 60 799: 1998)
Electrical accessories – Cord sets and interconnection cord sets (IEC 60 799: 1998);
German version EN 60 799: 1998

**DIN VDE 0627 : 06.86**
Plug-in connectors and plug and socket devices with rated voltages up to AC 1000 V,
up to DC 1200 V and rated currents up to 500 A per contact

**DIN VDE 0628: 11.84**
Plug-in connectors for nominal voltages up to AC 380 V with nominal current of 16 A

**DIN IEC 23/221/CD/VDE 0606 part 1535: 07.96**
Separable connecting devices intended for permanent connection – Part. 1 : General requirements;
IEC 23/221/CD: 1996

**DIN EN 60 947-1/VDE 0660 part 100: 12.99**
(IEC 60 947-1: 1996, modified + Corrigendum March 1998)
Low-voltage switching devices
Part 1: General definitions

**DIN EN 60 439-1/VDE 0660 part 500: 08.00**
(IEC 60 439-1: 1999)
Low- voltage switchgear and controlgear assemblies – Part 1:
Type-tested and partially type-tested assemblies

**DIN EN 60 439-3/VDE 0660 part 504: 04.92**
(IEC 60 439-3: 1990, modified)
Switching devices; low-voltage switchgear assembly;
Part 3: Special requirements of low-voltage switchgear assembly that laymen have access to operate,
– Distribution boards –

**DIN EN 60 335-1/VDE 0700 part 1: 10.95**
(IEC 60 335-1: 1991, modified)
Safety of electrical devices for household and similar use;
Part 1: General requirements

**EN 60 335-1 A2: 1988, A5: 1989, A6: 1989 and A51: 1991/DIN VDE 0700 part 1 A6: 12.91**
Safety of electrical devices for household and similar use
Part 1: General requirements (modifications)

**DIN EN 60 598-1/VDE 0711 part 1: 08.98**
(IEC 60 598-1: 1996, modified)
Luminaires
Part 1: General requirements and tests

**DIN EN 60 127-2/VDE 0820 part 2: 08.96**
(IEC 60 127-2: 1989 + A1: 1995 + A2: 2000)
Miniature fuses Part 2: Cartridge fuse-links German version EN 60 127-2: 1989 + A1: 1995 + A2: 2000

**DIN EN 60 127-6/VDE 0820 part 6: 12.96**
(IEC 60 127-6: 1994 + A1996)
VDE specification for fuses (G fuses)
Specification for G fuse holder

**EN 60 715: 2001/DIN EN 60 715: 09.2001**
Dimensions of low-voltage switchgear and controlgear
Standardized mounting on rails for mechanical support of electrical devices in switchgear and controlgear installations
(IEC 60 715: 1981 + A1: 1995); German version EN 60 715: 2001

**IEC 60 038: 1983/DIN IEC 38: 05.87**
and supplement 1 to DIN IEC 38/12.92
IEC standard voltages
At the end of 1993, the international standard IEC 38 „IEC standard voltages“ was agreed.
In the framework of this standard it was not possible to standardize worldwide the applicable voltage values 220/380 V, 230/400 V and 240/415 V for 50 Hz low-voltage supply networks.

The supply nominal voltage should according to this standard not exceed the values 230/400 V + 6 %/–10 % during the transition period up to the year 2003.

Through these defined tolerances for the optional voltage of the networks, it is possible that 220/380 V rated electrical equipment, as indicated in DIN IEC 38, can be used safely until the end of their service life.

All the considerations indicated above should be used at the existing value of 380/660 V in light of the new value of 400/690 V.

Therefore, products that are tested, documented and labelled for 220/380 V have unlimited use in devices and installations for 230/400 V supply voltage until the end of the transition period.

**DIN IEC 512 part 3: 05.94**
Measurement and test procedures for electrical and mechanical components
Test 5b: Current carrying capacity (Derating curve)

**DIN 43 652 part 1-3: 12.85 withdrawn**
High-density connectors; square design

**replaced by**
**DIN EN 175 301-801: 09.00**
Detail Specification: High density rectangular connectors, round removable crimp contacts;
(German version EN 175 301-801: 1999)

# Standards and specifications for electronic components

facts & DATA

The indicated standards and regulations are considered for the development and manufacturing of our products, as applicable.
The installation instructions are also to be followed when installing our products in devices and systems.

**New nominal supply voltages 30/400 V worldwide**

Since the publication of standard IEC 38 in 1983, 230/400 V has replaced 220/380 V as international value for public low-voltage networks.
The supply nominal voltage should according to this standard not exceed the values 230/400 V + 6 %/–10 %, i.e. the range between 244 V and 207 V, during the transition period up to the year 2003.

Through these defined tolerances for the optional voltage of the networks, it is possible that 220/380 V rated electrical equipment, as indicated in DIN IEC 38, can be used safely until the end of their service life.

All the considerations indicated above should be used at the existing value of 380/660 V in light of the new value of 400/690 V.

**DIN VDE 0106-100/VDE 0106 part 100: 03.83**
(DIN 57106-100)
Protection of electric shock;
Actuating members positioned close to parts liable to shock (VDE Specification)

**DIN VDE 0106-101/ VDE 106 part 101: 11.86**
Protection against electric shock;
basic requirements for protective separation

**DIN EN 50 178/VDE 0160/: 04.98**
Equipping of power installations with electronic equipment

**EN 50 005: 1976/DIN EN 50 005: 1977-07**
Low voltage switchgear and controlgear for industrial use;
Terminal marking; General rules

**IEC 60 038: 1983/DIN IEC 60 038: 1987-05**
(DIN 40 002)
IEC standard voltages

**IEC 60 127-2: 1989/EN 60 127-2: 1991/**
**DIN EN 60 127-2 1996-08**
Miniature fuses; part 2: cartridge fuse-links

**IEC 60 255/DIN VDE 0435**
(1999-01)
Electrical relays; terms and definitions

**DIN EN 60529 /VDE 0470 part 1: 09.00**
**(IEC 61529: 1989)**
Protection categories by housing (IP code)

**IEC 60 742: 1983 + A1/EN 60 742: 1995/**
**DIN EN 60 742/VDE 0551: 1995-09**
Isolating transformers and safety isolating transformers – Requirements

**DIN EN 60 068-2-1: 1995-03 Environmental testing**
**EN 600 68-2-1: 1985-08**
**IEC 600 68-2-1: 1990-04**
Part 2: Tests; Tests A: Cold

**DIN EN 60 068-2-2: 1994-08 Basic environmental testing procedures**
**EN 600 68-2-2: 1993-0**
**IEC 600 68-2-2**
Part 2: Tests – Tests B: Dry heat

**DIN EN 60 068-2-6: 1996-05 Environmental testing**
**EN 600 68-2-6: 1995-04/IEC 600 68-2-6: 1995-03**
Part 2: Tests, Test Fc: Vibration (sinusoidal) (IEC 68-2-6: 1995 + Corrigendum 1995)
German version EN 60 068-2-6: 1995

**DIN EN 60 068-2-32: 1995-03 Basic environmental testing procedures –**
**EN 600 68-2-32: 1993-04/IEC 600 68-2-32**
Part 2: Tests; Test Ed: Free fall (IEC 68-2-32: 1975 + A1: 1982 + A2: 1990); German version EN 60 068-2-32: 1993

**DIN EN 61 131-2/EN 61 131-2/**
**VDE 0411 part 500: 1995-05/IEC 61 131-2: 1992**
Programmable controllers – Part 2: Equipment requirements and tests (IEC 61 131-2: 1992); German version EN 61 131-2: 1994 + A11: 1996 + A12: 2000 + Corrigendum to EN 61 131-2: 1994 and its amendment A11: 1996

**DIN EN 50 090-2-2/EN 50 090-2-2: 1996-06**
**VDE 0829 part 2-2: 1997-06**
Home and building electronic systems (HBES) – Part 2-2: System overview – General technical requirements

**DIN EN 50 170/2: 1997-07**
**EN 50 170: 1996-12**
General purpose field communication system

**EN 61 000-6-3 (2001-12) DIN EN 61 000-6-3/VDE 0839 part 6-3 (2001-12)**
Electromagnetic compatibility (EMC) – Part 6-3: Generic standards; Emission standard for residential, commercial and light-industrial environments (IEC 61 000-6-3: 1996, modified)

**EN 61 000-6-4 (2001-10) DIN EN 61 000-6-4/VDE 0839 part 6-4 (2001-12)**
Electromagnetic compatibility (EMC) – Part 6-4: Generic standards; Emission standard for industrial environments, (IEC 61 000-6-4: 1997, modified); German version

**EN 61 000-6-1 (2001-10) DIN EN 50 082-1/VDE 0839 part 82-1: 1997-11**
Electromagnetic compatibility – Generic immunity standard – Part 1: Residential, commercial and light industry

**IEC 61 000-6-2; 1999-01/EN 61 000-6-2 (2001-10)/DIN EN 61 000-6-2/**
**VDE 0839 part 6-2 (2001-12)**
Electromagnetic compatibility (EMC) –
Part 6-2: Generic standards – Immunity for industrial environments (IEC 61 000-6-2: 1999)

**IEC 61 000-4-2: 1995-01/EN 61 000-4-2: 1995-03/DIN EN 61 000-4-2/**
**VDE 0847 part 4-2: 2001-12**
Electromagnetc compatibility (EMC) – Part 4: Testing and measuring techniques – Section 2: Electrostatic discharge immunity test, Basic EMC Publication (IEC 1000-4-2: 1995); German version EN 61 000-4-2: 1995

**IEC 61 000-4-3: 1995/EN 61 000-4-3: 1996/DIN EN 61 000-4-3/**
**VDE 0847 part 4-3: 2001-12**
Electromagnetic compatibility (EMC) – Part 4: Testing and measuring techniques –
Section 3: Radiated, radio-frequency electromagnetic field immunity test (IEC 1000-4-3: 1995, modified);
German version EN 61 000-4-3: 1996

**IEC 61 000-4-4: 1995-01/EN 61 000-4-4: 1995-03/DIN EN 61 000-4-4/**
**VDE 0847 part 4-4: 2001-12**
Electromagnetic compatibility (EMC) – Part 4: Testing and measuring techniques –
Section 4: Electrical test transient/burst immunity test, Basic EMC Publication (IEC 1000-4-4: 1995);
German version EN 61 000-4-4: 1995

**IEC 61 000-4-5: 1995-02/EN 61 000-4-5: 1995-03/DIN EN 61 000-4-5/**
**VDE 0847 part 4-5: 2001-12**
Electromagnetic compatibility (EMC) – Part 4: Testing and measurement techniques –
Section 5: Surge immunity test (IEC 1000-4-5: 1995);
German version EN 61 000-4-5: 1995

**IEC 61 000-4-6 1996-03; EN 61 000-4-6 1996-07;**
**DIN EN 61 000-4-6/VDE 0847 part 4-6 2001-12**
Electromagnetic compatibility (EMC) – Part 4: Testing and measuring techniques –
Section 6: Immunity to conducted disturbances, induced by radio-frequency fields (IEC 1000-4-6: 1996);
German version EN 61 000-4-6: 1996

**IEC 61 000-4-11 (1994) EN 61 000-4-11 (1994-08)**
**DIN EN 61 000-4-11/VDE 0847 part 4-11**
Electromagnetic compatibility (EMC) – Part 4: Testing and measuring techniques –
Section 11: Voltages dips, short interruptions and voltages variations immunity tests (IEC 1000-4-11: 1994);
German version EN 61 000-4-11: 1994

**IEC 61 000-4-15 (1997-11) EN 61 000-4-15 (1998-04)**
**DIN EN 61 000-4-15/VDE 0847 part 4-15 (1998-11)**
Electromagnetic compatibility (EMC) – Part 4: Testing and measurement techniques –
Section 15: Flickermeter – Functional and design specifications

**IEC 61 000-3-3 (1994-12) EN 61 000-3-3 (1995-01)**
**DIN EN 61 000-3-3/VDE 0838 part 3 (1996-03)**
Electromagnetic compatibility (EMC) – Part 3: Limits; section 3: Limitation of voltage fluctuations and flicker in low-voltage supply systems for equipment with rated current < kleiner ≥ 16 A

**IEC 61 000-3-2 (2000-08) EN 61 000-3-2 (1995-04)**
**DIN EN 61 000-3-2/VDE 0838 part 2 (1998-10)**
Electromagnetic compatibility (EMC) – Part 3-2: Limits; Limits for harmonic current emissions
(equipment input current < kleiner ≥ 16 A per phase)

**EN 50 081-1 1992-01-00**
**DIN EN 50 081/VDE 0839 part 81-1 1993-03-00**
Electromagnetic compatibility; generic emission standard; part 1: residential, commercial and light industry

**DIN EN 55 011/VDE 0875 part 11: 2000-05**
**EN 55 011: 1998-03**

**IEC 60 255/DIN VDE 0435 (1999-01-00)**
**VDE 0551 = DIN EN 60742 (1995-09)**

**DIN EN 55 011/VDE 0875 part 11: 2000-05-00**
Industrial, scientific and medical (ISM) radio-frequency equipment – Radio disturbance characteristics –
Limits and methods of measurement (IEC/CISPR 11: 1997, modified + A1: 1999);
German version EN 55 011: 1998 + A1: 1999

**UL 94: 1996-10**
Tests for flammability of plastic materials for parts in devices and appliances

**VBG 4: 1979-04**
Electric installation and equipment

**COUNCIL DIRECTIVE**
of 3 May 1989 on the approximation of the laws of the Member States relating to electromagnetic compatibility (89/336/EEC)

# facts

# List of approval and test institutes and test laboratories

facts & DATA

| | | |
|---|---|---|
| | AVK-TV | Arbeitsgemeinschaft Verstärkte Kunststoffe-Techn. Vereinigung e. V., Germany |
| BVS | BVS | Bergbau Versuchstrecke (DMT), Germany |
| BSI | BSI | British Standards Institution, Great Britain |
| | BBJ | Biuro Badawcze ds. Jakosci, Poland |
| BV | BV | Bureau Veritas, France |
| | CSA | Canadian Standards Association, Canada |
| CCA | CCA | CCA-NTR, CENELEC CERTIFICATION AGREEMENT- |
| | AU | Chief Electrical Inspector, Victoria, Australia |
| CEBEC | CEBEC | Comite Electrotechnique Belge, Belgium |
| | DEMKO | Danmarks Elektriske Materielkontrol, Denmark |
| NV | DNV | Det Norske Veritas, Norway |
| | AU-DFT | Department of Fair Trading, NSW Consumer Protection Agency, Australia |
| EPM | EPM | Elektrisches Prüfamt München, Germany |
| | ESTI | Eidgenössisches Starkstrominspektorat, Switzerland |
| EIBA | EIBA | European Installation Bus Association sc , Belgium |
| | ELMAC | EMV Labor J. Bühne, Germany |
| FI | FIMKO | Electrical Inspectorate, Finnland |
| | EZU | Electrotechnical Testing Institute, Czech Republic |
| | DQS | Frankfurt, Germany |
| GL | GL | Germanischer Lloyd, Germany |
| GS | GS | Geprüfte Sicherheit, Germany |
| | EMCC | Ingenieurbüro EMCC Dr. Rasek, Germany |
| | MY-JBP | IBU Pejabat, Jabatan Bomba dan Penyelamat, Malaysia |
| | IMQ | Instituto Italiano del Marchio di Qualita, Italy |
| KEMA | KEMA | Keuring van Elektrotechnische Materialen, Netherlands, KEMA-ATEX |
| | IEL-Pr.Ber | Laboratorium Badawcze Oddz. Instyt. Elektrotechn. w Gdansku, Poland |
| LCIE | LCIE-EEX | Laboratoire Central des Industries Electriques, France |
| LGA | LGA | Landesgewerbeanstalt Bayern, Germany |
| LCIE-PrBer | LCIE-PrBer | LCIE-Prüfbericht, France |
| LR | LR | Lloyd's Register of Shipping, Great Britain |

**For more information visit us on the internet under www.wieland-electric.com**

| | | |
|---|---|---|
| | MEEI | Magyar Elektrotechnikai Ellenoerzoe Intezet, Hungary |
| | NEMKO | Norges Elektriske Materiellkontroll, Norway |
| | ÖVE | Österreichischer Verband für Elektrotechnik, Austria |
| PTB | PTB | Physikalisch-Technische Bundesanstalt, Germany |
| | BGFE | Prüf-u. Zert.stelle der Berufsgen. der Feinmech. u. Elektrt., Germany |
| RINA | RINA | Registro Italiano Navale, Italy |
| | Belstandart | White Russia |
| BKI-EEx | BKI-EEx | Robbanasbiztos Villamos Berendezesek Vizsgalo Allomasa, Hungary |
| | GOST R | Russian Federation |
| | Russ. Reg | Russ. Reg. of Shipping, Russia |
| | SEV | Schweizerischer Elektrotechnischer Verein, Switzerland |
| | EMV-SIE | Siemens AG, AUT GT 6, Germany |
| SEV-EEX | SEV-EEX | SEV Ex-Labor „Explosionsschutz", Switzerland |
| | SKTC | Slovak Testing Centre, Elektrotechnicky ustav a.s., Slovakia |
| | SIQ | Slovenian Institute of Quality and Metrology, Slovenia |
| | MPA | Staatliche Materialprüfungsanstalt Darmstadt, Germany |
| | SEMKO | Svenska Elektriska Materielkontrollanstalten, Sweden |
| TÜV | TÜV | Technischer Überwachungsverein, Germany |
| ASTA | ASTA | The Association of Short Circuit Testing Authoryties, Great Britain |
| | Ukrdershst | Ukrdershstandart, Ukraine |
| | ULlist | Underwriters Laboratories Inc.(UL Listed), USA |
| | ULrec | Underwriters Laboratories Inc.(UL Recogn.), USA |
| | UTE | Union Technique de l'Electricite, France |
| | VDE-UG | VDE Gutachten mit Fertigungsüberwachung, Germany |
| | VDE-PB | VDE Pruefbericht zur Information des Herstellers, Germany |
| | VDE | Verband Deutscher Elektrotechniker e.V., Germany |
| | ZIK | Zavod za Ispitivanje Kvalitete robe, Croatia |

## Approval marks for "special tests"

| | | |
|---|---|---|
| | C UR US | Underwr. Lab. Inc.(C-UL Recogn.-US), USA/Canada |
| | C UL US | Underwr. Lab. Inc.(C-UL Listed-US), USA/Canada |

**Table of contents, structured as per type description and part number**

# ***contents*** TYPE/PART NUMBER

contents

# contents of type description

# contents TYPE


| Type | Part no. | section / page |
|---|---|---|
| ,0 BIS 11,0 MM | Z2.803.0228.0 | 210 |
| ,0 BIS 11,0 MM | Z2.803.1428.0 | 212 |
| ,5 BIS 13,5 MM | Z2.803.0328.0 | 210 |
| ,5 BIS 6,5 MM | Z2.803.1328.0 | 212 |
| .ADC 1 GELB | 04.344.0153.8 | 232 |
| / 70 E S35 | Z2.302.0421.0 | 111 |
| 0,0 BIS 17,0 MM | Z2.803.1528.0 | 212 |
| 0,2 -0,56 QMM | 02.124.0900.0 | 683 |
| 0,2 -0,56 QMM | 02.124.0929.0 | 683 |
| 0,2 -0,56 QMM | 05.544.0900.0 | 683 |
| 0,2 -0,56 QMM | 05.544.0929.0 | 683 |
| 0,5 -01,5 QMM | 02.124.1000.0 | 683 |
| 0,5 -1,5 QMM | 02.124.1029.0 | 683 |
| 0,5 -1,5 QMM | 05.544.1000.0 | 683 |
| 0,5 -1,5 QMM | 05.544.1029.0 | 683 |
| 0,5 -1,5 QMM VERGOLDET | 02.124.1400.0 | 683 |
| 0,5 -1,5 QMM VERGOLDET | 02.124.1429.0 | 683 |
| 0,5 -1,5 QMM VERGOLDET | 05.544.1429.0 | 683 |
| 0,5 -1,5 QNN VERGOLDET | 05.544.1400.0 | 683 |
| 1027 | 14.230.0270.0 | 262 |
| 1029 | 14.220.0370.0 | 262 |
| 1031 | 14.220.0270.0 | 262 |
| 1032 | 14.200.0270.0 | 262 |
| 1032 DS | 14.201.0270.0 | 262 |
| 1032 M 3.5 | 14.200.1270.0 | 262 |
| 1033 | 14.200.0370.0 | 262 |
| 1033 DS | 14.201.0370.0 | 262 |
| 1033 A | 14.200.0470.0 | 262 |
| 1033 A DS | 14.201.0470.0 | 262 |
| 1033 A M 3.5 | 14.200.1470.0 | 262 |
| 1033 AP KR | 14.290.0440.0 | 262 |
| 1033 AP DS KR | 14.291.0440.0 | 262 |
| 1033 M 3.5 | 14.200.1370.0 | 262 |
| 1036 R | 05.590.3121.0 | 263 |
| 1038 A | 30.400.0675.0 | 263 |
| 1038 A DS | 30.401.0475.0 | 263 |
| 1038 B | 30.400.1075.0 | 263 |
| 1038 B DS | 30.401.0675.0 | 263 |
| 1038 C | 30.400.1675.0 | 263 |
| 1038 C DS | 30.401.1075.0 | 263 |
| 1039 M | 98.060.0000.0 | 263 |
| 1039 W | 05.522.0725.0 | 263 |
| 10A | 05.595.6200.0 | 128 |
| 10A | 05.595.9500.0 | 128 |
| 10E | 21.330.6253.0 | 259 |
| 10E / 1 | 21.330.5153.0 | 259 |
| 10E / 1 DS | 21.331.5153.0 | 259 |
| 10E / 2 | 21.330.5253.0 | 259 |
| 10E / 2 BZ | 04.070.0280.0 | 260 |
| 10E / 2 DS | 21.331.5253.0 | 259 |
| 10E / 3 | 21.330.5353.0 | 259 |
| 10E / 3 BZ | 04.070.0380.0 | 260 |
| 10E / 3 DS | 21.331.5353.0 | 259 |
| 10E / 4 | 21.330.5453.0 | 259 |
| 10E / 4 BZ | 04.070.0480.0 | 260 |
| 10E / 4 DS | 21.331.5453.0 | 259 |
| 10E / 5 | 21.330.5553.0 | 259 |
| 10E / 5 BZ | 04.070.0580.0 | 260 |
| 10E / 5 DS | 21.331.5553.0 | 259 |
| 10E / 6 | 21.330.5653.0 | 259 |
| 10E / 6 BZ | 04.070.0680.0 | 260 |
| 10E / 6 DS | 21.331.5653.0 | 259 |
| 10E / 7 | 21.330.5753.0 | 259 |
| 10E / 7 DS | 21.331.5753.0 | 259 |
| 10E / 8 | 21.330.5853.0 | 259 |
| 10E / 8 DS | 21.331.5853.0 | 259 |
| 10E / 9 | 21.330.5953.0 | 259 |
| 10E / 9 DS | 21.331.5953.0 | 259 |
| 10E / M BZ | 04.070.1380.0 | 260 |
| 10E / 10 | 21.330.6053.0 | 259 |
| 10E / 10 DS | 21.331.6053.0 | 259 |
| 10E / 12 BZ | 04.070.1280.0 | 260 |
| 10E / 12 DBZ | 04.071.1280.0 | 260 |
| 10E DS | 21.331.6253.0 | 259 |
| 110 VDC 1W | Z8.000.0181.0 | 456 |
| 110 VDC 2W | Z8.000.0176.2 | 458 |
| 110/220V 1 UMSCHALTER | 57.800.5153.0 | 450 |
| 111..BIS 000.. | 04.841.9050.0 | 395 |
| 111..BIS 000.. | 04.841.9050.0 | 791 |
| 111..BIS 000.. | 04.841.9050.0 | 181 |
| 13 BFK / 4 TOP K OB | 25.840.3453.0 | 292 |
| 134/ 14 | 25.500.1453.0 | 360 |
| 16,0 BIS 24,0 MM | Z2.803.1628.0 | 212 |
| 16A | 05.595.6300.0 | 128 |
| 16E | 21.340.6253.0 | 259 |
| 16E / 1 | 21.340.5153.0 | 259 |
| 16E / 1 DS | 21.341.5153.0 | 259 |
| 16E / 2 | 21.340.5253.0 | 259 |
| 16E / 2 BZ | 04.090.0280.0 | 260 |
| 16E / 2 DS | 21.341.5253.0 | 259 |
| 16E / 3 | 21.340.5353.0 | 259 |
| 16E / 3 BZ | 04.090.0380.0 | 260 |
| 16E / 3 DS | 21.341.5353.0 | 259 |
| 16E / 4 | 21.340.5453.0 | 259 |
| 16E / 4 BZ | 04.090.0480.0 | 260 |
| 16E / 4 DS | 21.341.5453.0 | 259 |
| 16E / 5 | 21.340.5553.0 | 259 |
| 16E / 5 BZ | 04.090.0580.0 | 260 |
| 16E / 5 DS | 21.341.5553.0 | 259 |
| 16E / 6 | 21.340.5653.0 | 259 |
| 16E / 6 BZ | 04.090.0680.0 | 260 |
| 16E / 6 DS | 21.341.5653.0 | 259 |
| 16E / 7 | 21.340.5753.0 | 259 |
| 16E / 7 DS | 21.341.5753.0 | 259 |
| 16E / 8 | 21.340.5853.0 | 259 |
| 16E / 8 DS | 21.341.5853.0 | 259 |
| 16E / 9 | 21.340.5953.0 | 259 |
| 16E / 9 DS | 21.341.5953.0 | 259 |
| 16E / M BZ | 04.090.1380.0 | 260 |
| 16E / 10 | 21.340.6053.0 | 259 |
| 16E / 10 DS | 21.341.6053.0 | 259 |
| 16E / 12 BZ | 04.090.1280.0 | 260 |
| 16E DS | 21.341.6253.0 | 259 |
| 18 X 3 M SN 1000MM | 98.291.1000.0 | 213 |
| 1X 9P BUCHSE LOET | Z7.415.0010.0 | 756 |
| 1X 9P STECKER LOET | Z7.415.0235.0 | 756 |
| 1X15P BUCHSE LOET | Z7.415.0810.0 | 756 |
| 1X15P STECKER LOET | Z7.415.1035.0 | 756 |
| 1X25+1X15P BUCHSE LOET | Z7.415.1810.0 | 756 |
| 1X25+1X15P STECKER LOET | Z7.415.2135.0 | 756 |
| 1X25P BUCHSE LOET | Z7.415.1610.0 | 756 |
| 1X25P STECKER LOET | Z7.415.1935.0 | 756 |
| 1X37P BUCHSE LOET | Z7.415.2410.0 | 756 |
| 1X37P STECKER LOET | Z7.415.2635.0 | 756 |
| 1X50P BUCHSE LOET | Z7.415.3210.0 | 756 |
| 1X50P STECKER LOET | Z7.415.3335.0 | 756 |
| 2 DIN 46284 ST | 14.210.0270.0 | 262 |
| 2 D DIN 46284 ST | 14.211.0270.0 | 262 |
| 2,08 GELB | 05.596.6127.0 | 797 |
| 2,5 BIS 16,5 MM | Z2.803.0428.0 | 210 |
| 2072 / 2 | Z7.220.0227.0 | 141 |
| 2072 / 3 | Z7.220.0327.0 | 164 |
| 2072 / 4 | Z7.220.0427.0 | 164 |
| 2072 / 5 | Z7.220.0527.0 | 164 |
| 2072 / 6 | Z7.220.0627.0 | 141 |
| 2072 M | Z7.210.1027.0 | 164 |
| 20A | 05.595.6400.0 | 128 |
| 20E | 21.340.4253.0 | 259 |
| 20E / 1 | 21.340.3153.0 | 259 |
| 20E / 1 DS | 21.341.3153.0 | 259 |
| 20E / 2 | 21.340.3253.0 | 259 |
| 20E / 2 DS | 21.341.3253.0 | 259 |
| 20E / 3 | 21.340.3353.0 | 259 |
| 20E / 3 DS | 21.341.3353.0 | 259 |
| 20E / 4 | 21.340.3453.0 | 259 |
| 20E / 4 DS | 21.341.3453.0 | 259 |
| 20E / 5 | 21.340.3553.0 | 259 |
| 20E / 5 DS | 21.341.3553.0 | 259 |
| 20E / 6 | 21.340.3653.0 | 259 |
| 20E / 6 DS | 21.341.3653.0 | 259 |
| 20E / 7 | 21.340.3753.0 | 259 |
| 20E / 7 DS | 21.341.3753.0 | 259 |
| 20E / 8 | 21.340.3853.0 | 259 |
| 20E / 8 DS | 21.341.3853.0 | 259 |
| 20E / 9 | 21.340.3953.0 | 259 |
| 20E / 9 DS | 21.341.3953.0 | 259 |
| 20E / 10 | 21.340.4053.0 | 259 |
| 20E / 10 DS | 21.341.4053.0 | 259 |
| 20E DS | 21.341.4253.0 | 259 |
| 2163 | Z5.522.1923.0 | 215 |
| 220 V AC 1 SCHLIESSER | 57.800.0353.0 | 450 |
| 24 Gehaeuse-UT | Z5.574.0153.0 | 782 |
| 24 V 1 SCHLIESSER | 57.800.0053.0 | 448 |
| 24 V 2 UMSCHALTER | 57.800.7053.0 | 449 |
| 24 VDC 1W | Z8.000.0056.9 | 454 |
| 24 VDC 2W | Z8.000.0035.5 | 455 |
| 24/48V 1 UMSCHALTER | 57.800.5053.0 | 448 |
| 25A | 05.595.6500.0 | 128 |
| 2A | 05.595.5900.0 | 128 |
| 2A | 05.595.9200.0 | 128 |
| 2X 9P BUCHSE LOET | Z7.415.0110.0 | 756 |
| 2X 9P STECKER LOET | Z7.415.0335.0 | 756 |
| 2X15P BUCHSE LOET | Z7.415.0910.0 | 756 |
| 2X15P STECKER LOET | Z7.415.1135.0 | 756 |
| 2X25P BUCHSE LOET | Z7.415.1710.0 | 756 |
| 2X25P STECKER LOET | Z7.415.2035.0 | 756 |
| 2X37P BUCHSE LOET | Z7.415.2510.0 | 756 |
| 2X37P STECKER LOET | Z7.415.2735.0 | 756 |
| 2X50P BUCHSE LOET | Z7.415.3410.0 | 756 |
| 2X50P STECKER LOET | Z7.415.3535.0 | 756 |
| 3 DIN 46284 ST | 14.210.0370.0 | 262 |
| 3 D DIN 46284 ST | 14.211.0370.0 | 262 |
| 300 | 90.100.0554.0 | 182 |
| 300 / 9708 / 2 S35 | 69.920.0553.0 | 47 |
| 300 B | 90.100.1154.0 | 182 |
| 300 B K | 90.100.1354.0 | 182 |
| 300 K | 90.100.1254.0 | 182 |
| 301 | 90.100.0754.0 | 182 |
| 301 K | 90.100.1454.0 | 182 |
| 303 | 90.100.0854.0 | 182 |
| 303 K | 90.100.1554.0 | 182 |
| 305 | 90.100.1054.0 | 182 |
| 305 K | 90.100.1654.0 | 182 |
| 315 E | 05.590.0052.0 | 182 |
| 315 GC | 90.811.3055.0 | 182 |
| 315 GK | 90.810.3055.0 | 182 |
| 319 / 13.5 K ELFB. | 90.800.1055.8 | 182 |
| 319 / 13.5 K SCHW. | 90.800.1055.1 | 182 |
| 319 / 17.5 K ELFB. | 90.800.2055.8 | 182 |
| 319 / 17.5 K SCHW. | 90.800.2055.1 | 182 |
| 35 X 24 X 15 EN 60715 | 98.360.0000.0 | 584 |
| 35 X 24 X 15 EN 60715 | 98.360.0000.0 | 803 |
| 35 X 24 X 15 EN 60715 | 98.360.0000.0 | 308 |
| 35 X 24 X 15 EN 60715 | 98.360.0000.0 | 20 |
| 35 X 27 X 15 | 98.370.0000.0 | 38 |
| 35 X 27 X 15 | 98.370.0000.0 | 803 |
| 35 X 27 X 15 GELOCHT 1M | 98.375.1000.0 | 803 |
| 35 X 27 X 15 GELOCHT 2M | 98.370.1000.0 | 46 |
| 35 X 27 X 15 GELOCHT 2M | 98.370.1000.0 | 803 |
| 35A | 05.595.6600.0 | 128 |
| 35x24x15 EN 60715 FZN | 98.360.0004.0 | 46 |
| 35X24X15 EN60715 CU | 98.380.0000.0 | 803 |
| 35X24X15 EN60715 CU | 98.380.0000.0 | 47 |
| 35X27X 7,5 GELOCHT | 98.300.1000.0 | 803 |
| 35X27X 7,5 GELOCHT | 98.300.1000.0 | 19 |
| 35X27X7,5 EN 60715 1M | 98.305.1000.0 | 803 |
| 35X27X7,5 EN 60715 2M | 98.300.0000.0 | 20 |
| 35X27X7,5 EN 60715 2M | 98.300.0000.0 | 308 |
| 35X27X7,5 EN 60715 2M | 98.300.0000.0 | 803 |
| 35X27X7,5 EN 60715 2M | 98.300.0000.0 | 584 |
| 35x27x7,5 EN60715 BLANK | 98.300.0010.0 | 46 |
| 4A | 05.595.6000.0 | 128 |
| 4A | 05.595.9300.0 | 128 |
| 4E | 21.304.1253.0 | 257 |
| 4E / 1 | 21.304.0153.0 | 257 |
| 4E / 1 DS | 21.305.0153.0 | 257 |
| 4E / 2 | 21.304.0253.0 | 257 |
| 4E / 2 DS | 21.305.0253.0 | 257 |
| 4E / 3 | 21.304.0353.0 | 257 |
| 4E / 3 DS | 21.305.0353.0 | 257 |
| 4E / 4 | 21.304.0453.0 | 257 |
| 4E / 4 DS | 21.305.0453.0 | 257 |
| 4E / 5 | 21.304.0553.0 | 257 |
| 4E / 5 DS | 21.305.0553.0 | 257 |
| 4E / 6 | 21.304.0653.0 | 257 |
| 4E / 6 DS | 21.305.0653.0 | 257 |
| 4E / 7 | 21.304.0753.0 | 257 |
| 4E / 7 DS | 21.305.0753.0 | 257 |
| 4E / 8 | 21.304.0853.0 | 257 |
| 4E / 8 DS | 21.305.0853.0 | 257 |
| 4E / 9 | 21.304.0953.0 | 257 |
| 4E / 9 DS | 21.305.0953.0 | 257 |
| 4E / 10 | 21.304.1053.0 | 257 |
| 4E / 10 DS | 21.305.1053.0 | 257 |
| 4E / 11 | 21.304.1153.0 | 257 |
| 4E / 11 DS | 21.305.1153.0 | 257 |
| 4E DS | 21.305.1253.0 | 257 |
| 4Q DC24V 2A | 99.801.3900.9 | 538 |
| 50A | 05.595.6700.0 | 128 |
| 513 S / 13 W | 25.647.1353.0 | 284 |
| 547 | 14.100.0170.0 | 261 |
| 548 | 14.100.0270.0 | 261 |
| 549 | 14.100.0370.0 | 261 |
| 6 X 6 1000MM | 98.325.1000.0 | 216 |
| 6 X 6 2000MM | 98.320.0000.0 | 216 |
| 6/10/16 Gehaeuse-UT | Z5.574.0053.0 | 782 |
| 6A | 05.595.6100.0 | 128 |
| 6A | 05.595.9400.0 | 128 |
| 6E | 21.310.1253.0 | 258 |
| 6E / 1 | 21.310.0153.0 | 258 |
| 6E / 1 DS | 21.311.0153.0 | 258 |
| 6E / 2 | 21.310.0253.0 | 258 |
| 6E / 2 DS | 21.311.0253.0 | 258 |
| 6E / 3 | 21.310.0353.0 | 258 |
| 6E / 3 DS | 21.311.0353.0 | 258 |
| 6E / 4 | 21.310.0453.0 | 258 |
| 6E / 4 DS | 21.311.0453.0 | 258 |
| 6E / 5 DS | 21.311.0553.0 | 258 |
| 6E / 6 | 21.310.0653.0 | 258 |
| 6E / 6 DS | 21.311.0653.0 | 258 |
| 6E / 7 | 21.310.0753.0 | 258 |
| 6E / 7 DS | 21.311.0753.0 | 258 |
| 6E / 8 | 21.310.0853.0 | 258 |
| 6E / 8 DS | 21.311.0853.0 | 258 |
| 6E / 9 | 21.310.0953.0 | 258 |
| 6E / 9 DS | 21.311.0953.0 | 258 |
| 6E / 10 | 21.310.1053.0 | 258 |
| 6E / 10 DS | 21.311.1053.0 | 258 |
| 6E DS | 21.311.1253.0 | 258 |
| 6E H | 21.312.1253.0 | 257 |
| 6E H / 1 | 21.312.0153.0 | 257 |
| 6E H / 1 DS | 21.313.0153.0 | 257 |
| 6E H / 2 | 21.312.0253.0 | 257 |
| 6E H / 2 DS | 21.313.0253.0 | 257 |
| 6E H / 3 | 21.312.0353.0 | 257 |
| 6E H / 3 DS | 21.313.0353.0 | 257 |
| 6E H / 4 | 21.312.0453.0 | 257 |
| 6E H / 4 DS | 21.313.0453.0 | 257 |
| 6E H / 5 | 21.312.0553.0 | 257 |
| 6E H / 5 DS | 21.313.0553.0 | 257 |
| 6E H / 6 | 21.312.0653.0 | 257 |
| 6E H / 6 DS | 21.313.0653.0 | 257 |
| 6E H / 7 | 21.312.0753.0 | 257 |
| 6E H / 7 DS | 21.313.0753.0 | 257 |
| 6E H / 8 | 21.312.0853.0 | 257 |
| 6E H / 8 DS | 21.313.0853.0 | 257 |
| 6E H / 9 | 21.312.0953.0 | 257 |
| 6E H / 9 DS | 21.313.0953.0 | 257 |
| 6E H / 10 | 21.312.1053.0 | 257 |
| 6E H / 10 DS | 21.313.1053.0 | 257 |
| 6E H / 11 | 21.312.1153.0 | 257 |
| 6E H / 11 DS | 21.313.1153.0 | 257 |
| 6E H DS | 21.313.1253.0 | 257 |
| 6E SONDERA. | 99.262.3521.9 | 258 |
| 6E SONDERA. | 99.263.3521.9 | 258 |
| 6E SONDERA. | 99.264.3521.9 | 258 |
| 6E SONDERA. | 99.265.3521.9 | 258 |
| 6E SONDERA. | 99.266.3521.9 | 258 |
| 6E SONDERA. | 99.267.3521.9 | 258 |
| 6E SONDERA. | 99.268.3521.9 | 258 |
| 6E SONDERA. | 99.270.3521.9 | 258 |
| 6ES | 22.310.1253.0 | 258 |
| 6ES / 1 | 22.310.0153.0 | 258 |
| 6ES / 2 | 22.310.0253.0 | 258 |
| 6ES / 3 | 22.310.0353.0 | 258 |
| 6ES / 4 | 22.310.0453.0 | 258 |
| 6ES / 5 | 22.310.0553.0 | 258 |
| 6ES / 6 | 22.310.0653.0 | 258 |
| 6ES / 7 | 22.310.0753.0 | 258 |
| 6ES / 8 | 22.310.0853.0 | 258 |
| 6ES / 9 | 22.310.0953.0 | 258 |

# contents


| Type | Part no. | section / page |
|---|---|---|
| 6ES / 10 | 22.310.1053.0 | 258 |
| 7386 / 3 TOP H OB | 27.714.0353.0 | 355 |
| 7386 / 6 TOP H OB | 27.714.0653.0 | 355 |
| 7572 L2 / 2 OB | 27.002.2253.0 | 376 |
| 7572 L2 / 3 / 2 OB | 27.002.4253.0 | 377 |
| 7572 L2 / 3 OB | 27.002.2353.0 | 376 |
| 7572 L2 / 5 / 3 OB | 27.002.4353.0 | 377 |
| 7572 L4 / 2 OB | 27.002.0253.0 | 376 |
| 7572 L4 / 3 OB | 27.002.0353.0 | 376 |
| 7573 L2 / 3 W OB | 27.002.6353.0 | 375 |
| 7573 L2 / 4 W OB | 27.002.6453.0 | 375 |
| 8006 / 2 BZ | 04.030.0080.0 | 260 |
| 8006 / 3 BZ | 04.030.0180.0 | 260 |
| 8006 / 4 BZ | 04.030.0280.0 | 260 |
| 8006 / 5 BZ | 04.030.0380.0 | 260 |
| 8006 / 6 BZ | 04.030.0480.0 | 260 |
| 8006 / 12 BZ | 04.030.1080.0 | 260 |
| 8006 M BZ | 04.030.1180.0 | 260 |
| 8016 / 2 BZ | 04.080.0080.0 | 260 |
| 8016 / 3 BZ | 04.080.0180.0 | 260 |
| 8016 / 4 BZ | 04.080.0280.0 | 260 |
| 8016 / 5 BZ | 04.080.0380.0 | 260 |
| 8016 / 6 BZ | 04.080.0480.0 | 260 |
| 8016 / 12 BZ | 04.080.1080.0 | 260 |
| 8016 M BZ | 04.080.1180.0 | 260 |
| 8105 / B 2 C5 VR OB | 15.025.0253.0 | 382 |
| 8105 B / 2 C0 OB | 15.000.0253.0 | 382 |
| 8105 B / 2 C0 VL OB | 15.010.0253.0 | 383 |
| 8105 B / 2 C0 VR OB | 15.020.0253.0 | 382 |
| 8105 B / 2 C1 OB | 15.001.0253.0 | 382 |
| 8105 B / 2 C1 VL OB GR | 15.011.0253.0 | 383 |
| 8105 B / 2 C1 VR OB | 15.021.0253.0 | 382 |
| 8105 B / 2 C2 OB | 15.002.0253.0 | 382 |
| 8105 B / 2 C2 VL OB GR | 15.012.0253.0 | 383 |
| 8105 B / 2 C2 VR OB GR | 15.022.0253.0 | 382 |
| 8105 B / 2 C3 OB | 15.003.0253.0 | 382 |
| 8105 B / 2 C3 VL OB | 15.013.0253.0 | 383 |
| 8105 B / 2 C3 VR OB | 15.023.0253.0 | 382 |
| 8105 B / 2 C4 OB | 15.004.0253.0 | 382 |
| 8105 B / 2 C4 VL OB | 15.014.0253.0 | 383 |
| 8105 B / 2 C4 VR OB GR | 15.024.0253.0 | 382 |
| 8105 B / 2 C5 OB | 15.005.0253.0 | 382 |
| 8105 B / 2 C5 VL OB | 15.015.0253.0 | 383 |
| 8105 B / 2 C6 OB | 15.006.0253.0 | 382 |
| 8105 B / 2 C6 OB | 15.016.0253.0 | 383 |
| 8105 B / 2 C6 VR OB | 15.026.0253.0 | 382 |
| 8105 B / 2 C7 OB | 15.007.0253.0 | 382 |
| 8105 B / 2 C7 VL OB | 15.017.0253.0 | 383 |
| 8105 B / 2 C7 VR OB GR | 15.027.0253.0 | 382 |
| 8105 B / 3 C0 OB | 15.000.0353.0 | 382 |
| 8105 B / 3 C0 VL OB | 15.010.0353.0 | 383 |
| 8105 B / 3 C0 VR OB | 15.020.0353.0 | 382 |
| 8105 B / 3 C1 OB | 15.001.0353.0 | 382 |
| 8105 B / 3 C1 VL OB | 15.011.0353.0 | 383 |
| 8105 B / 3 C1 VR OB | 15.021.0353.0 | 382 |
| 8105 B / 3 C2 OB | 15.002.0353.0 | 382 |
| 8105 B / 3 C2 VL OB GR | 15.012.0353.0 | 383 |
| 8105 B / 3 C2 VR OB GR | 15.022.0353.0 | 382 |
| 8105 B / 3 C3 OB | 15.003.0353.0 | 382 |
| 8105 B / 3 C3 VL OB | 15.013.0353.0 | 383 |
| 8105 B / 3 C3 VR OB GR | 15.023.0353.0 | 382 |
| 8105 B / 3 C4 OB | 15.004.0353.0 | 382 |
| 8105 B / 3 C4 VL OB | 15.014.0353.0 | 383 |
| 8105 B / 3 C4 VR OB GR | 15.024.0353.0 | 382 |
| 8105 B / 3 C5 OB | 15.005.0353.0 | 382 |
| 8105 B / 3 C5 VL OB | 15.015.0353.0 | 383 |
| 8105 B / 3 C5 VR OB GR | 15.025.0353.0 | 382 |
| 8105 B / 3 C6 OB | 15.016.0353.0 | 383 |
| 8105 B / 3 C6 OB GR | 15.006.0353.0 | 382 |
| 8105 B / 3 C6 VR OB | 15.026.0353.0 | 382 |
| 8105 B / 3 C7 OB | 15.007.0353.0 | 382 |
| 8105 B / 3 C7 VL OB | 15.017.0353.0 | 383 |
| 8105 B / 3 C7 VR OB | 15.027.0353.0 | 382 |
| 8105 B / 4 C0 OB | 15.000.0453.0 | 382 |
| 8105 B / 4 C0 VL OB | 15.010.0453.0 | 383 |
| 8105 B / 4 C0 VR OB | 15.020.0453.0 | 382 |
| 8105 B / 4 C1 OB | 15.001.0453.0 | 382 |
| 8105 B / 4 C1 VL OB | 15.011.0453.0 | 383 |
| 8105 B / 4 C1 VR OB GR | 15.021.0453.0 | 382 |
| 8105 B / 4 C2 OB | 15.002.0453.0 | 382 |
| 8105 B / 4 C2 VL OB | 15.012.0453.0 | 383 |
| 8105 B / 4 C2 VR OB | 15.022.0453.0 | 382 |
| 8105 B / 4 C3 OB | 15.003.0453.0 | 382 |
| 8105 B / 4 C3 VL OB | 15.013.0453.0 | 383 |
| 8105 B / 4 C3 VR OB | 15.023.0453.0 | 382 |
| 8105 B / 4 C4 OB | 15.004.0453.0 | 382 |
| 8105 B / 4 C4 VL OB | 15.014.0453.0 | 383 |
| 8105 B / 4 C4 VR OB GR | 15.024.0453.0 | 382 |
| 8105 B / 4 C5 OB | 15.005.0453.0 | 382 |
| 8105 B / 4 C5 VL OB | 15.015.0453.0 | 383 |
| 8105 B / 4 C5 VR OB GR | 15.025.0453.0 | 382 |
| 8105 B / 4 C6 OB | 15.006.0453.0 | 382 |
| 8105 B / 4 C6 VL OB | 15.016.0453.0 | 383 |
| 8105 B / 4 C6 VR OB | 15.026.0453.0 | 382 |
| 8105 B / 5 C0 OB | 15.000.0553.0 | 382 |
| 8105 B / 5 C0 VL OB | 15.010.0553.0 | 383 |
| 8105 B / 5 C0 VR OB | 15.020.0553.0 | 382 |
| 8105 B / 5 C1 OB | 15.001.0553.0 | 382 |
| 8105 B / 5 C1 VL OB | 15.011.0553.0 | 383 |
| 8105 B / 5 C1 VR OB | 15.021.0553.0 | 382 |
| 8105 B / 5 C2 OB | 15.002.0553.0 | 382 |
| 8105 B / 5 C2 VL OB | 15.012.0553.0 | 383 |
| 8105 B / 5 C2 VR OB | 15.022.0553.0 | 382 |
| 8105 B / 6 C0 OB | 15.000.0653.0 | 382 |
| 8105 B / 6 C0 OB | 15.001.0653.0 | 382 |
| 8105 B / 6 C0 VL OB | 15.010.0653.0 | 383 |
| 8105 B / 6 C0 VR OB | 15.020.0653.0 | 382 |
| 8105 B / 6 C1 VL OB | 15.011.0653.0 | 383 |
| 8105 B / 6 C1 VR OB | 15.021.0653.0 | 382 |
| 8105 B / 6 C2 OB GR | 15.002.0653.0 | 382 |
| 8105 B / 6 C2 VL OB | 15.012.0653.0 | 383 |
| 8105 B / 6 C2 VR OB | 15.022.0653.0 | 382 |
| 8105 B / 7 C0 OB | 15.000.0753.0 | 382 |
| 8105 B / 7 C0 VL OB | 15.010.0753.0 | 383 |
| 8105 B / 7 C0 VR OB | 15.020.0753.0 | 382 |
| 8105 B / 7 C1 OB | 15.001.0753.0 | 382 |
| 8105 B / 7 C1 VL OB | 15.011.0753.0 | 383 |
| 8105 B / 7 C1 VR OB | 15.021.0753.0 | 382 |
| 8105 B / 7 C2 OB | 15.002.0753.0 | 382 |
| 8105 B / 7 C2 VL OB | 15.012.0753.0 | 383 |
| 8105 B / 7 C2 VR OB | 15.022.0753.0 | 382 |
| 8105 F / 2 G C1 OB NT | 15.301.0258.9 | 383 |
| 8105 F / 2 G C2 OB NT | 15.302.0258.9 | 383 |
| 8105 F / 2 G C3 OB NT | 15.303.0258.9 | 383 |
| 8105 F / 2 G C4 OB NT | 15.304.0258.9 | 383 |
| 8105 F / 2 G C5 OB NT | 15.305.0258.9 | 383 |
| 8105 F / 2 G C6 OB NT | 15.306.0258.9 | 383 |
| 8105 F / 2 G C7 OB NT | 15.307.0258.9 | 383 |
| 8105 F / 2 W C1 OB NT | 15.311.0258.9 | 383 |
| 8105 F / 2 W C2 OB NT | 15.312.0258.9 | 383 |
| 8105 F / 2 W C3 OB NT | 15.313.0258.9 | 383 |
| 8105 F / 2 W C4 OB NT | 15.314.0258.9 | 383 |
| 8105 F / 2 W C5 OB NT | 15.315.0258.9 | 383 |
| 8105 F / 2 W C6 OB NT | 15.316.0258.9 | 383 |
| 8105 F / 3 G C1 OB NT | 15.301.0358.9 | 383 |
| 8105 F / 3 G C2 OB NT | 15.302.0358.9 | 383 |
| 8105 F / 3 G C3 OB NT | 15.303.0358.9 | 383 |
| 8105 F / 3 G C4 OB NT | 15.304.0358.9 | 383 |
| 8105 F / 3 G C5 OB NT | 15.305.0358.9 | 383 |
| 8105 F / 3 G C6 OB NT | 15.306.0358.9 | 383 |
| 8105 F / 3 G C7 OB NT | 15.307.0358.9 | 383 |
| 8105 F / 3 W C1 OB NT | 15.311.0358.9 | 383 |
| 8105 F / 3 W C2 OB NT | 15.312.0358.9 | 383 |
| 8105 F / 3 W C3 OB NT | 15.313.0358.9 | 383 |
| 8105 F / 3 W C4 OB NT | 15.314.0358.9 | 383 |
| 8105 F / 3 W C5 OB NT | 15.315.0358.9 | 383 |
| 8105 F / 3 W C6 OB NT | 15.316.0358.9 | 383 |
| 8105 F / 3 W C7 OB NT | 15.317.0358.9 | 383 |
| 8105 F / 4 G C1 OB NT | 15.301.0458.9 | 383 |
| 8105 F / 4 G C2 OB NT | 15.302.0458.9 | 383 |
| 8105 F / 4 G C3 OB NT | 15.303.0458.9 | 383 |
| 8105 F / 4 G C4 OB NT | 15.304.0458.9 | 383 |
| 8105 F / 4 G C5 OB NT | 15.305.0458.9 | 383 |
| 8105 F / 4 G C6 OB NT | 15.306.0458.9 | 383 |
| 8105 F / 4 W C1 OB NT | 15.311.0458.9 | 383 |
| 8105 F / 4 W C2 OB NT | 15.312.0458.9 | 383 |
| 8105 F / 4 W C3 OB NT | 15.313.0458.9 | 383 |
| 8105 F / 4 W C4 OB NT | 15.314.0458.9 | 383 |
| 8105 F / 4 W C5 OB NT | 15.315.0458.9 | 383 |
| 8105 F / 4 W C6 OB NT | 15.316.0458.9 | 383 |
| 8105 F / 5 G C1 OB NT | 15.301.0558.9 | 383 |
| 8105 F / 5 G C2 OB NT | 15.302.0558.9 | 383 |
| 8105 F / 5 W C1 OB NT | 15.311.0558.9 | 383 |
| 8105 F / 5 W C2 OB NT | 15.312.0558.9 | 383 |
| 8105 F / 6 G C1 OB NT | 15.301.0658.9 | 383 |
| 8105 F / 6 G C2 OB NT | 15.302.0658.9 | 383 |
| 8105 F / 6 W C1 OB NT | 15.311.0658.9 | 383 |
| 8105 F / 6 W C2 OB NT | 15.312.0658.9 | 383 |
| 8105 F / 7 G C1 OB NT | 15.301.0758.9 | 383 |
| 8105 F / 7 G C2 OB NT | 15.302.0758.9 | 383 |
| 8105 F / 7 W C1 OB NT | 15.311.0758.9 | 383 |
| 8105 F / 7 W C2 OB NT | 15.312.0758.9 | 383 |
| 8105 F / Z W C7 OB NT | 15.317.0258.9 | 383 |
| 8113 / 16 WF OB | 25.339.4653.0 | 299 |
| 8113 B / 2 | 25.320.0253.0 | 286 |
| 8113 B / 2 F | 25.322.0253.0 | 286 |
| 8113 B / 2 F OB | 25.322.3253.0 | 286 |
| 8113 B / 2 OB | 25.320.3253.0 | 286 |
| 8113 B / 2 TOP | 25.220.0253.0 | 296 |
| 8113 B / 2 TOP LED OB | 25.230.3253.0 | 296 |
| 8113 B / 2 TOP OB | 25.220.3253.0 | 296 |
| 8113 B / 2 VL | 25.326.0253.0 | 289 |
| 8113 B / 2 VL OB | 25.326.3253.0 | 289 |
| 8113 B / 2 VR | 25.325.0253.0 | 289 |
| 8113 B / 2 VR OB | 25.325.3253.0 | 289 |
| 8113 B / 3 | 25.320.0353.0 | 286 |
| 8113 B / 3 F | 25.322.0353.0 | 286 |
| 8113 B / 3 F OB | 25.322.3353.0 | 286 |
| 8113 B / 3 OB | 25.320.3353.0 | 286 |
| 8113 B / 3 TOP | 25.220.0353.0 | 296 |
| 8113 B / 3 TOP LED OB | 25.230.3353.0 | 296 |
| 8113 B / 3 TOP OB | 25.220.3353.0 | 296 |
| 8113 B / 3 VL | 25.326.0353.0 | 289 |
| 8113 B / 3 VL OB | 25.326.3353.0 | 289 |
| 8113 B / 3 VR | 25.325.0353.0 | 289 |
| 8113 B / 3 VR OB | 25.325.3353.0 | 289 |
| 8113 B / 4 | 25.320.0453.0 | 286 |
| 8113 B / 4 F | 25.322.0453.0 | 286 |
| 8113 B / 4 F OB | 25.322.3453.0 | 286 |
| 8113 B / 4 OB | 25.320.3453.0 | 286 |
| 8113 B / 4 TOP | 25.220.0453.0 | 296 |
| 8113 B / 4 TOP LED OB | 25.230.3453.0 | 296 |
| 8113 B / 4 TOP OB | 25.220.3453.0 | 296 |
| 8113 B / 4 VL | 25.326.0453.0 | 289 |
| 8113 B / 4 VL OB | 25.326.3453.0 | 289 |
| 8113 B / 4 VR | 25.325.0453.0 | 289 |
| 8113 B / 4 VR OB | 25.325.3453.0 | 289 |
| 8113 B / 5 | 25.320.0553.0 | 286 |
| 8113 B / 5 F | 25.322.0553.0 | 286 |
| 8113 B / 5 F OB | 25.322.3553.0 | 286 |
| 8113 B / 5 OB | 25.320.3553.0 | 286 |
| 8113 B / 5 TOP | 25.220.0553.0 | 296 |
| 8113 B / 5 TOP LED OB | 25.230.3553.0 | 296 |
| 8113 B / 5 TOP OB | 25.220.3553.0 | 296 |
| 8113 B / 5 VL | 25.326.0553.0 | 289 |
| 8113 B / 5 VL OB | 25.326.3553.0 | 289 |
| 8113 B / 5 VR | 25.325.0553.0 | 289 |
| 8113 B / 5 VR OB | 25.325.3553.0 | 289 |
| 8113 B / 6 | 25.320.0653.0 | 286 |
| 8113 B / 6 F | 25.322.0653.0 | 286 |
| 8113 B / 6 F OB | 25.322.3653.0 | 286 |
| 8113 B / 6 OB | 25.320.3653.0 | 286 |
| 8113 B / 6 TOP | 25.220.0653.0 | 296 |
| 8113 B / 6 TOP LED OB | 25.230.3653.0 | 296 |
| 8113 B / 6 TOP OB | 25.220.3653.0 | 296 |
| 8113 B / 6 VL | 25.326.0653.0 | 289 |
| 8113 B / 6 VL OB | 25.326.3653.0 | 289 |
| 8113 B / 6 VR | 25.325.0653.0 | 289 |
| 8113 B / 6 VR OB | 25.325.3653.0 | 289 |
| 8113 B / 7 | 25.320.0753.0 | 286 |
| 8113 B / 7 F | 25.322.0753.0 | 286 |
| 8113 B / 7 F OB | 25.322.3753.0 | 286 |
| 8113 B / 7 OB | 25.320.3753.0 | 286 |
| 8113 B / 7 TOP | 25.220.0753.0 | 296 |
| 8113 B / 7 TOP LED OB | 25.230.3753.0 | 296 |
| 8113 B / 7 TOP OB | 25.220.3753.0 | 296 |
| 8113 B / 7 VL | 25.326.0753.0 | 289 |
| 8113 B / 7 VL OB | 25.326.3753.0 | 289 |
| 8113 B / 7 VR | 25.325.0753.0 | 289 |
| 8113 B / 7 VR OB | 25.325.3753.0 | 289 |
| 8113 B / 8 | 25.320.0853.0 | 286 |
| 8113 B / 8 F | 25.322.0853.0 | 286 |
| 8113 B / 8 F OB | 25.322.3853.0 | 286 |
| 8113 B / 8 OB | 25.320.3853.0 | 286 |
| 8113 B / 8 TOP | 25.220.0853.0 | 296 |
| 8113 B / 8 TOP LED OB | 25.230.3853.0 | 296 |
| 8113 B / 8 TOP OB | 25.220.3853.0 | 296 |
| 8113 B / 8 VL | 25.326.0853.0 | 289 |
| 8113 B / 8 VL OB | 25.326.3853.0 | 289 |
| 8113 B / 8 VR | 25.325.0853.0 | 289 |
| 8113 B / 8 VR OB | 25.325.3853.0 | 289 |
| 8113 B / 9 | 25.320.0953.0 | 286 |
| 8113 B / 9 F | 25.322.0953.0 | 286 |
| 8113 B / 9 F OB | 25.322.3953.0 | 286 |
| 8113 B / 9 OB | 25.320.3953.0 | 286 |
| 8113 B / 9 TOP | 25.220.0953.0 | 296 |
| 8113 B / 9 TOP LED OB | 25.230.3953.0 | 296 |
| 8113 B / 9 TOP OB | 25.220.3953.0 | 296 |
| 8113 B / 9 VL | 25.326.0953.0 | 289 |
| 8113 B / 9 VL OB | 25.326.3953.0 | 289 |
| 8113 B / 9 VR | 25.325.0953.0 | 289 |
| 8113 B / 9 VR OB | 25.325.3953.0 | 289 |
| 8113 B / 10 | 25.320.1053.0 | 286 |
| 8113 B / 10 F | 25.322.1053.0 | 286 |
| 8113 B / 10 F OB | 25.322.4053.0 | 286 |
| 8113 B / 10 OB | 25.320.4053.0 | 286 |
| 8113 B / 10 TOP | 25.220.1053.0 | 296 |
| 8113 B / 10 TOP LED OB | 25.230.4053.0 | 296 |
| 8113 B / 10 TOP OB | 25.220.4053.0 | 296 |
| 8113 B / 10 VL | 25.326.1053.0 | 289 |
| 8113 B / 10 VL OB | 25.326.4053.0 | 289 |
| 8113 B / 10 VR | 25.325.1053.0 | 289 |
| 8113 B / 10 VR OB | 25.325.4053.0 | 289 |
| 8113 B / 11 | 25.320.1153.0 | 286 |
| 8113 B / 11 F | 25.322.1153.0 | 286 |
| 8113 B / 11 F OB | 25.322.4153.0 | 286 |
| 8113 B / 11 OB | 25.320.4153.0 | 286 |
| 8113 B / 11 TOP | 25.220.1153.0 | 296 |
| 8113 B / 11 TOP LED OB | 25.230.4153.0 | 296 |
| 8113 B / 11 TOP OB | 25.220.4153.0 | 296 |
| 8113 B / 11 VL | 25.326.1153.0 | 289 |
| 8113 B / 11 VL OB | 25.326.4153.0 | 289 |
| 8113 B / 11 VR | 25.325.1153.0 | 289 |
| 8113 B / 11 VR OB | 25.325.4153.0 | 289 |
| 8113 B / 12 | 25.320.1253.0 | 286 |
| 8113 B / 12 F | 25.322.1253.0 | 286 |
| 8113 B / 12 F OB | 25.322.4253.0 | 286 |
| 8113 B / 12 OB | 25.320.4253.0 | 286 |
| 8113 B / 12 TOP | 25.220.1253.0 | 296 |
| 8113 B / 12 TOP LED OB | 25.230.4253.0 | 296 |
| 8113 B / 12 TOP OB | 25.220.4253.0 | 296 |
| 8113 B / 12 VL | 25.326.1253.0 | 289 |
| 8113 B / 12 VL OB | 25.326.4253.0 | 289 |
| 8113 B / 12 VR | 25.325.1253.0 | 289 |
| 8113 B / 12 VR OB | 25.325.4253.0 | 289 |
| 8113 B / 13 | 25.320.1353.0 | 286 |
| 8113 B / 13 F | 25.322.1353.0 | 286 |
| 8113 B / 13 F OB | 25.322.4353.0 | 286 |
| 8113 B / 13 OB | 25.320.4353.0 | 286 |
| 8113 B / 13 TOP | 25.220.1353.0 | 296 |
| 8113 B / 13 TOP OB | 25.220.4353.0 | 296 |
| 8113 B / 13 VL | 25.326.1353.0 | 289 |
| 8113 B / 13 VL OB | 25.326.4353.0 | 289 |
| 8113 B / 13 VR | 25.325.1353.0 | 289 |
| 8113 B / 13 VR OB | 25.325.4353.0 | 289 |
| 8113 B / 14 | 25.320.1453.0 | 286 |
| 8113 B / 14 F | 25.322.1453.0 | 286 |
| 8113 B / 14 F OB | 25.322.4453.0 | 286 |
| 8113 B / 14 OB | 25.320.4453.0 | 286 |
| 8113 B / 14 TOP | 25.220.1453.0 | 296 |
| 8113 B / 14 TOP OB | 25.220.4453.0 | 296 |
| 8113 B / 14 VL | 25.326.1453.0 | 289 |
| 8113 B / 14 VL OB | 25.326.4453.0 | 289 |
| 8113 B / 14 VR | 25.325.1453.0 | 289 |
| 8113 B / 14 VR OB | 25.325.4453.0 | 289 |
| 8113 B / 15 | 25.320.1553.0 | 286 |
| 8113 B / 15 F | 25.322.1553.0 | 286 |
| 8113 B / 15 F OB | 25.322.4553.0 | 286 |
| 8113 B / 15 OB | 25.320.4553.0 | 286 |
| 8113 B / 15 TOP | 25.220.1553.0 | 296 |
| 8113 B / 15 TOP LED OB | 25.230.4553.0 | 296 |

# contents of type description

# contents TYPE


| Type | Part no. | section / page |
|---|---|---|
| 8113 B / 15 TOP OB | 25.220.4553.0 | 296 |
| 8113 B / 15 VL | 25.326.1553.0 | 289 |
| 8113 B / 15 VL OB | 25.326.4553.0 | 289 |
| 8113 B / 15 VR | 25.325.1553.0 | 289 |
| 8113 B / 15 VR OB | 25.325.4553.0 | 289 |
| 8113 B / 16 | 25.320.1653.0 | 286 |
| 8113 B / 16 F | 25.322.1653.0 | 286 |
| 8113 B / 16 F OB | 25.322.4653.0 | 286 |
| 8113 B / 16 OB | 25.320.4653.0 | 286 |
| 8113 B / 16 TOP | 25.220.1653.0 | 296 |
| 8113 B / 16 TOP LED OB | 25.230.4653.0 | 296 |
| 8113 B / 16 TOP OB | 25.220.4653.0 | 296 |
| 8113 B / 16 VL | 25.326.1653.0 | 289 |
| 8113 B / 16 VL OB | 25.326.4653.0 | 289 |
| 8113 B / 16 VR | 25.325.1653.0 | 289 |
| 8113 B / 16 VR OB | 25.325.4653.0 | 289 |
| 8113 B / 2 SK0.75 OB | 25.399.9853.8 | 392 |
| 8113 B / 2 SK0.75 OB | 25.399.9853.5 | 392 |
| 8113 BFK / 2 TOP K | 25.820.0253.0 | 37 |
| 8113 BFK / 2 TOP K | 25.820.0253.0 | 292 |
| 8113 BFK / 2 TOP K OB | 25.820.3253.0 | 292 |
| 8113 BFK / 2 TOP K OB | 25.820.3253.0 | 37 |
| 8113 BFK / 3 TOP K | 25.820.0353.0 | 292 |
| 8113 BFK / 3 TOP K OB | 25.820.3353.0 | 37 |
| 8113 BFK / 3 TOP K OB | 25.820.3353.0 | 292 |
| 8113 BFK / 4 TOP K | 25.820.0453.0 | 37 |
| 8113 BFK / 4 TOP K | 25.820.0453.0 | 292 |
| 8113 BFK / 4 TOP K OB | 25.820.3453.0 | 37 |
| 8113 BFK / 4 TOP K OB | 25.820.3453.0 | 292 |
| 8113 BFK / 4 TOP K F OB | 25.821.3453.0 | 292 |
| 8113 BFK / 5 TOP K | 25.820.0553.0 | 37 |
| 8113 BFK / 5 TOP K | 25.820.0553.0 | 292 |
| 8113 BFK / 5 TOP K OB | 25.820.3553.0 | 292 |
| 8113 BFK / 5 TOP K OB | 25.820.3553.0 | 37 |
| 8113 BFK / 6 TOP K | 25.820.0653.0 | 292 |
| 8113 BFK / 6 TOP K | 25.820.0653.0 | 37 |
| 8113 BFK / 6 TOP K OB | 25.820.3653.0 | 292 |
| 8113 BFK / 6 TOP K OB | 25.820.3653.0 | 37 |
| 8113 BFK / 7 TOP K | 25.820.0753.0 | 37 |
| 8113 BFK / 7 TOP K | 25.820.0753.0 | 292 |
| 8113 BFK / 7 TOP K OB | 25.820.3753.0 | 37 |
| 8113 BFK / 7 TOP K OB | 25.820.3753.0 | 292 |
| 8113 BFK / 8 TOP K | 25.820.0853.0 | 292 |
| 8113 BFK / 8 TOP K | 25.820.0853.0 | 37 |
| 8113 BFK / 8 TOP K OB | 25.820.3853.0 | 292 |
| 8113 BFK / 8 TOP K OB | 25.820.3853.0 | 37 |
| 8113 BFK / 9 TOP K | 25.820.0953.0 | 37 |
| 8113 BFK / 9 TOP K | 25.820.0953.0 | 292 |
| 8113 BFK / 9 TOP K OB | 25.820.3953.0 | 292 |
| 8113 BFK / 9 TOP K OB | 25.820.3953.0 | 37 |
| 8113 BFK /10 TOP K | 25.820.1053.0 | 292 |
| 8113 BFK /10 TOP K | 25.820.1053.0 | 37 |
| 8113 BFK /10 TOP K OB | 25.820.4053.0 | 292 |
| 8113 BFK /10 TOP K OB | 25.820.4053.0 | 37 |
| 8113 BFK /11 TOP K | 25.820.1153.0 | 37 |
| 8113 BFK /11 TOP K | 25.820.1153.0 | 292 |
| 8113 BFK /11 TOP K OB | 25.820.4153.0 | 292 |
| 8113 BFK /11 TOP K OB | 25.820.4153.0 | 37 |
| 8113 BFK /12 TOP K | 25.820.1253.0 | 37 |
| 8113 BFK /12 TOP K | 25.820.1253.0 | 292 |
| 8113 BFK /12 TOP K OB | 25.820.4253.0 | 292 |
| 8113 BFK /12 TOP K OB | 25.820.4253.0 | 37 |
| 8113 BFK /13 TOP K | 25.820.1353.0 | 37 |
| 8113 BFK /13 TOP K | 25.820.1353.0 | 292 |
| 8113 BFK /13 TOP K OB | 25.820.4353.0 | 37 |
| 8113 BFK /13 TOP K OB | 25.820.4353.0 | 292 |
| 8113 BFK /14 TOP K | 25.820.1453.0 | 292 |
| 8113 BFK /14 TOP K | 25.820.1453.0 | 37 |
| 8113 BFK /14 TOP K OB | 25.820.4453.0 | 292 |
| 8113 BFK /14 TOP K OB | 25.820.4453.0 | 37 |
| 8113 BFK /15 TOP K | 25.820.1553.0 | 37 |
| 8113 BFK /15 TOP K | 25.820.1553.0 | 292 |
| 8113 BFK /15 TOP K OB | 25.820.4553.0 | 292 |
| 8113 BFK /15 TOP K OB | 25.820.4553.0 | 37 |
| 8113 BFK /16 TOP K | 25.820.1653.0 | 292 |
| 8113 BFK /16 TOP K | 25.820.1653.0 | 37 |
| 8113 BFK /16 TOP K OB | 25.820.4653.0 | 292 |
| 8113 BFK /16 TOP K OB | 25.820.4653.0 | 37 |
| 8113 BK / 2 | 01.060.0253.0 | 291 |
| 8113 BK / 2 OB | 01.060.3253.0 | 291 |
| 8113 BK / 3 | 01.060.0353.0 | 291 |
| 8113 BK / 3 OB | 01.060.3353.0 | 291 |
| 8113 BK / 4 | 01.060.0453.0 | 291 |
| 8113 BK / 4 OB | 01.060.3453.0 | 291 |
| 8113 BK / 5 | 01.060.0553.0 | 291 |
| 8113 BK / 5 OB | 01.060.3553.0 | 291 |
| 8113 BK / 6 | 01.060.0653.0 | 291 |
| 8113 BK / 6 OB | 01.060.3653.0 | 291 |
| 8113 BK / 7 | 01.060.0753.0 | 291 |
| 8113 BK / 7 OB | 01.060.3753.0 | 291 |
| 8113 BK / 8 | 01.060.0853.0 | 291 |
| 8113 BK / 8 OB | 01.060.3853.0 | 291 |
| 8113 BK / 9 | 01.060.0953.0 | 291 |
| 8113 BK / 9 OB | 01.060.3953.0 | 291 |
| 8113 BK / 10 | 01.060.1053.0 | 291 |
| 8113 BK / 10 OB | 01.060.4053.0 | 291 |
| 8113 BK / 11 | 01.060.1153.0 | 291 |
| 8113 BK / 11 OB | 01.060.4153.0 | 291 |
| 8113 BK / 12 | 01.060.1253.0 | 291 |
| 8113 BK / 12 OB | 01.060.4253.0 | 291 |
| 8113 BK / 13 | 01.060.1353.0 | 291 |
| 8113 BK / 13 OB | 01.060.4353.0 | 291 |
| 8113 BK / 14 | 01.060.1453.0 | 291 |
| 8113 BK / 14 OB | 01.060.4453.0 | 291 |
| 8113 BK / 15 | 01.060.1553.0 | 291 |
| 8113 BK / 15 OB | 01.060.4553.0 | 291 |
| 8113 BK / 16 | 01.060.1653.0 | 291 |
| 8113 BK / 16 OB | 01.060.4653.0 | 291 |
| 8113 BSK /2 0,75 OB | 25.399.9853.0 | 392 |
| 8113 S / 14 GOF OB | 99.214.9996.0 | 297 |
| 8113 S / 2 G OB | 25.330.3253.0 | 297 |
| 8113 S / 2 G OB GR OF | 99.202.9996.0 | 297 |
| 8113 S / 2 GF OB | 25.338.3253.0 | 298 |
| 8113 S / 2 S OB GR | 25.394.3253.0 | 302 |
| 8113 S / 2 S1 OB GR | 25.395.3253.0 | 302 |
| 8113 S / 2 W OB | 25.332.3253.0 | 298 |
| 8113 S / 2 W OB GR OF | 99.262.9996.0 | 299 |
| 8113 S / 2 WF OB | 25.339.3253.0 | 299 |
| 8113 S / 3 G OB | 25.330.3353.0 | 297 |
| 8113 S / 3 G OB GR OF | 99.203.9996.0 | 297 |
| 8113 S / 3 GF OB | 25.338.3353.0 | 298 |
| 8113 S / 3 S OB GR | 25.394.3353.0 | 302 |
| 8113 S / 3 S1 OB | 25.395.3353.0 | 302 |
| 8113 S / 3 W OB | 25.332.3353.0 | 298 |
| 8113 S / 3 W OB GR OF | 99.263.9996.0 | 299 |
| 8113 S / 3 WF OB | 25.339.3353.0 | 299 |
| 8113 S / 4 G OB | 25.330.3453.0 | 297 |
| 8113 S / 4 G OB GR OF | 99.204.9996.0 | 297 |
| 8113 S / 4 GF OB | 25.338.3453.0 | 298 |
| 8113 S / 4 S OB GR | 25.394.3453.0 | 302 |
| 8113 S / 4 S1 OB | 25.395.3453.0 | 302 |
| 8113 S / 4 W OB | 25.332.3453.0 | 298 |
| 8113 S / 4 W OB GR OF | 99.264.9996.0 | 299 |
| 8113 S / 4 WF OB | 25.339.3453.0 | 299 |
| 8113 S / 5 G OB | 25.330.3553.0 | 297 |
| 8113 S / 5 G OB GR OF | 99.205.9996.0 | 297 |
| 8113 S / 5 GF OB | 25.338.3553.0 | 298 |
| 8113 S / 5 S OB GR | 25.394.3553.0 | 302 |
| 8113 S / 5 S1 OB | 25.395.3553.0 | 302 |
| 8113 S / 5 W OB | 25.332.3553.0 | 298 |
| 8113 S / 5 W OB GR OF | 99.265.9996.0 | 299 |
| 8113 S / 5 WF OB | 25.339.3553.0 | 299 |
| 8113 S / 6 G OB | 25.330.3653.0 | 297 |
| 8113 S / 6 G OB GR OF | 99.206.9996.0 | 297 |
| 8113 S / 6 GF OB | 25.338.3653.0 | 298 |
| 8113 S / 6 S OB GR | 25.394.3653.0 | 302 |
| 8113 S / 6 S1 OB | 25.395.3653.0 | 302 |
| 8113 S / 6 W OB | 25.332.3653.0 | 298 |
| 8113 S / 6 W OB GR OF | 99.266.9996.0 | 299 |
| 8113 S / 6 WF OB | 25.339.3653.0 | 299 |
| 8113 S / 7 G OB | 25.330.3753.0 | 297 |
| 8113 S / 7 G OB GR OF | 99.207.9996.0 | 297 |
| 8113 S / 7 GF OB | 25.338.3753.0 | 298 |
| 8113 S / 7 S OB GR | 25.394.3753.0 | 302 |
| 8113 S / 7 S1 OB | 25.395.3753.0 | 302 |
| 8113 S / 7 W OB | 25.332.3753.0 | 298 |
| 8113 S / 7 W OB GR OF | 99.267.9996.0 | 299 |
| 8113 S / 7 WF OB | 25.339.3753.0 | 299 |
| 8113 S / 8 G OB | 25.330.3853.0 | 297 |
| 8113 S / 8 G OB GR OF | 99.208.9996.0 | 297 |
| 8113 S / 8 GF OB | 25.338.3853.0 | 298 |
| 8113 S / 8 S OB GR | 25.394.3853.0 | 302 |
| 8113 S / 8 S1 OB | 25.395.3853.0 | 302 |
| 8113 S / 8 W OB | 25.332.3853.0 | 298 |
| 8113 S / 8 W OB GR OF | 99.268.9996.0 | 299 |
| 8113 S / 8 WF OB | 25.339.3853.0 | 299 |
| 8113 S / 9 G OB | 25.330.3953.0 | 297 |
| 8113 S / 9 G OB GR OF | 99.209.9996.0 | 297 |
| 8113 S / 9 GF OB | 25.338.3953.0 | 298 |
| 8113 S / 9 S OB GR | 25.394.3953.0 | 302 |
| 8113 S / 9 S1 OB | 25.395.3953.0 | 302 |
| 8113 S / 9 W OB | 25.332.3953.0 | 298 |
| 8113 S / 9 W OB GR OF | 99.269.9996.0 | 299 |
| 8113 S / 9 WF OB | 25.339.3953.0 | 299 |
| 8113 S / 10 G OB | 25.330.4053.0 | 297 |
| 8113 S / 10 G OB GR OF | 99.210.9996.0 | 297 |
| 8113 S / 10 GF OB | 25.338.4053.0 | 298 |
| 8113 S / 10 S OB GR | 25.394.4053.0 | 302 |
| 8113 S / 10 S1 OB | 25.395.4053.0 | 302 |
| 8113 S / 10 W OB | 25.332.4053.0 | 298 |
| 8113 S / 10 W OB GR OF | 99.270.9996.0 | 299 |
| 8113 S / 10 WF OB | 25.339.4053.0 | 299 |
| 8113 S / 11 G OB | 25.330.4153.0 | 297 |
| 8113 S / 11 G OB GR OF | 99.211.9996.0 | 297 |
| 8113 S / 11 GF OB | 25.338.4153.0 | 298 |
| 8113 S / 11 S OB GR | 25.394.4153.0 | 302 |
| 8113 S / 11 S1 OB | 25.395.4153.0 | 302 |
| 8113 S / 11 W OB | 25.332.4153.0 | 298 |
| 8113 S / 11 W OB GR OF | 99.271.9996.0 | 299 |
| 8113 S / 11 WF OB | 25.339.4153.0 | 299 |
| 8113 S / 12 G OB | 25.330.4253.0 | 297 |
| 8113 S / 12 G OB GR OF | 99.212.9996.0 | 297 |
| 8113 S / 12 GF OB | 25.338.4253.0 | 298 |
| 8113 S / 12 S OB GR | 25.394.4253.0 | 302 |
| 8113 S / 12 S1 OB GR | 25.395.4253.0 | 302 |
| 8113 S / 12 W OB | 25.332.4253.0 | 298 |
| 8113 S / 12 W OB GR OF | 99.272.9996.0 | 299 |
| 8113 S / 12 WF OB | 25.339.4253.0 | 299 |
| 8113 S / 13 G OB | 25.330.4353.0 | 297 |
| 8113 S / 13 G OB GR OF | 99.213.9996.0 | 297 |
| 8113 S / 13 GF OB | 25.338.4353.0 | 298 |
| 8113 S / 13 S OB GR | 25.394.4353.0 | 302 |
| 8113 S / 13 S1 OB | 25.395.4353.0 | 302 |
| 8113 S / 13 W OB | 25.332.4353.0 | 298 |
| 8113 S / 13 W OB GR OF | 99.273.9996.0 | 299 |
| 8113 S / 13 WF OB | 25.339.4353.0 | 299 |
| 8113 S / 14 G OB | 25.330.4453.0 | 297 |
| 8113 S / 14 GF OB | 25.338.4453.0 | 298 |
| 8113 S / 14 S OB GR | 25.394.4453.0 | 302 |
| 8113 S / 14 S1 OB | 25.395.4453.0 | 302 |
| 8113 S / 14 W OB | 25.332.4453.0 | 298 |
| 8113 S / 14 W OB GR OF | 99.274.9996.0 | 299 |
| 8113 S / 14 WF OB | 25.339.4453.0 | 299 |
| 8113 S / 15 G OB | 25.330.4553.0 | 297 |
| 8113 S / 15 G OB GR OF | 99.215.9996.0 | 297 |
| 8113 S / 15 GF OB | 25.338.4553.0 | 298 |
| 8113 S / 15 S OB GR | 25.394.4553.0 | 302 |
| 8113 S / 15 S1 OB | 25.395.4553.0 | 302 |
| 8113 S / 15 W OB | 25.332.4553.0 | 298 |
| 8113 S / 15 W OB GR OF | 99.275.9996.0 | 299 |
| 8113 S / 15 WF OB | 25.339.4553.0 | 299 |
| 8113 S / 16 G OB | 25.330.4653.0 | 297 |
| 8113 S / 16 G OB GR OF | 99.216.9996.0 | 297 |
| 8113 S / 16 GF OB | 25.338.4653.0 | 298 |
| 8113 S / 16 S OB GR | 25.394.4653.0 | 302 |
| 8113 S / 16 S1 OB | 25.395.4653.0 | 302 |
| 8113 S / 16 W OB | 25.332.4653.0 | 298 |
| 8113 S / 16 W OB GR OF | 99.276.9996.0 | 299 |
| 8113 S E / 2 G OB | 25.334.3253.0 | 303 |
| 8113 S E / 2 W OB | 25.336.3253.0 | 303 |
| 8113 S E / 3 G OB | 25.334.3353.0 | 303 |
| 8113 S E / 3 W OB | 25.336.3353.0 | 303 |
| 8113 SEG/ 5/10 G OB | 27.334.0553.0 | 304 |
| 8113 SEG/ 5/10 W OB | 27.336.0553.0 | 304 |
| 8113 SEG/10/20 G OB | 27.334.1053.0 | 304 |
| 8113 SEG/10/20 W OB | 27.336.1053.0 | 304 |
| 81195 V/ 3/12 OB | 25.154.2353.0 | 373 |
| 8130 / 3 BZ | 04.033.0180.0 | 260 |
| 8130 / 4 BZ | 04.033.0280.0 | 260 |
| 8130 / 5 BZ | 04.033.0380.0 | 260 |
| 8130 / 6 BZ | 04.033.0480.0 | 260 |
| 8130 / 12 BZ | 04.033.1080.0 | 260 |
| 8130 M BZ | 04.033.1180.0 | 260 |
| 8134 / 2 | 25.500.0253.0 | 360 |
| 8134 / 2 OB | 25.501.0253.0 | 360 |
| 8134 / 2 ZN | 25.500.6253.0 | 360 |
| 8134 / 2 ZN OB | 25.501.6253.0 | 360 |
| 8134 / 3 | 25.500.0353.0 | 360 |
| 8134 / 3 OB | 25.501.0353.0 | 360 |
| 8134 / 3 ZN | 25.500.6353.0 | 360 |
| 8134 / 3 ZN OB | 25.501.6353.0 | 360 |
| 8134 / 4 | 25.500.0453.0 | 360 |
| 8134 / 4 OB | 25.501.0453.0 | 360 |
| 8134 / 5 | 25.500.0553.0 | 360 |
| 8134 / 5 OB | 25.501.0553.0 | 360 |
| 8134 / 6 | 25.500.0653.0 | 360 |
| 8134 / 6 OB | 25.501.0653.0 | 360 |
| 8134 / 7 | 25.500.0753.0 | 360 |
| 8134 / 7 OB | 25.501.0753.0 | 360 |
| 8134 / 8 | 25.500.0853.0 | 360 |
| 8134 / 8 OB | 25.501.0853.0 | 360 |
| 8134 / 9 | 25.500.0953.0 | 360 |
| 8134 / 9 OB | 25.501.0953.0 | 360 |
| 8134 / 10 | 25.500.1053.0 | 360 |
| 8134 / 10 OB | 25.501.1053.0 | 360 |
| 8134 / 11 | 25.500.1153.0 | 360 |
| 8134 / 11 OB | 25.501.1153.0 | 360 |
| 8134 / 12 | 25.500.1253.0 | 360 |
| 8134 / 12 OB | 25.501.1253.0 | 360 |
| 8134 / 13 | 25.500.1353.0 | 360 |
| 8134 / 13 OB | 25.501.1353.0 | 360 |
| 8134 / 14 OB | 25.501.1453.0 | 360 |
| 8134 / 15 | 25.500.1553.0 | 360 |
| 8134 / 15 OB | 25.501.1553.0 | 360 |
| 8134 / 16 | 25.500.1653.0 | 360 |
| 8134 / 16 OB | 25.501.1653.0 | 360 |
| 8135 / 2 | 25.520.0253.0 | 362 |
| 8135 / 2 OB | 25.521.0253.0 | 362 |
| 8135 / 2 ZN | 25.520.6253.0 | 362 |
| 8135 / 2 ZN OB | 25.521.6253.0 | 362 |
| 8135 / 3 | 25.520.0353.0 | 362 |
| 8135 / 3 OB | 25.521.0353.0 | 362 |
| 8135 / 3 ZN | 25.520.6353.0 | 362 |
| 8135 / 3 ZN OB | 25.521.6353.0 | 362 |
| 8135 / 4 | 25.520.0453.0 | 362 |
| 8135 / 4 OB | 25.521.0453.0 | 362 |
| 8135 / 5 | 25.520.0553.0 | 362 |
| 8135 / 5 OB | 25.521.0553.0 | 362 |
| 8135 / 6 | 25.520.0653.0 | 362 |
| 8135 / 6 OB | 25.521.0653.0 | 362 |
| 8135 / 7 | 25.520.0753.0 | 362 |
| 8135 / 7 OB | 25.521.0753.0 | 362 |
| 8135 / 8 | 25.520.0853.0 | 362 |
| 8135 / 8 OB | 25.521.0853.0 | 362 |
| 8135 / 9 | 25.520.0953.0 | 362 |
| 8135 / 9 OB | 25.521.0953.0 | 362 |
| 8135 / 10 | 25.520.1053.0 | 362 |
| 8135 / 10 OB | 25.521.1053.0 | 362 |
| 8135 / 11 | 25.520.1153.0 | 362 |
| 8135 / 11 OB | 25.521.1153.0 | 362 |
| 8135 / 12 | 25.520.1253.0 | 362 |
| 8135 / 12 OB | 25.521.1253.0 | 362 |
| 8135 / 13 | 25.520.1353.0 | 362 |
| 8135 / 13 OB | 25.521.1353.0 | 362 |
| 8135 / 14 | 25.520.1453.0 | 362 |
| 8135 / 14 OB | 25.521.1453.0 | 362 |
| 8135 / 15 | 25.520.1553.0 | 362 |
| 8135 / 15 OB | 25.521.1553.0 | 362 |
| 8135 / 16 | 25.520.1653.0 | 362 |
| 8135 / 16 OB | 25.521.1653.0 | 362 |
| 8142 / 9 | 25.600.2953.0 | 318 |
| 8142 / 2 | 25.600.2253.0 | 318 |
| 8142 / 2 OB | 25.602.2253.0 | 318 |
| 8142 / 3 | 25.600.2353.0 | 318 |
| 8142 / 3 OB | 25.602.2353.0 | 318 |
| 8142 / 4 | 25.600.2453.0 | 318 |
| 8142 / 4 OB | 25.602.2453.0 | 318 |
| 8142 / 4 / 2 | 25.601.1253.0 | 318 |
| 8142 / 4 / 2 OB | 25.603.1253.0 | 318 |
| 8142 / 5 | 25.600.2553.0 | 318 |
| 8142 / 5 OB | 25.602.2553.0 | 318 |

# contents


| Type | Part no. | section / page |
|---|---|---|
| 8142 / 6 | 25.600.2653.0 | 318 |
| 8142 / 6 OB | 25.602.2653.0 | 318 |
| 8142 / 6 / 3 | 25.601.1353.0 | 318 |
| 8142 / 6 / 3 OB | 25.603.1353.0 | 318 |
| 8142 / 7 | 25.600.2753.0 | 318 |
| 8142 / 7 OB | 25.602.2753.0 | 318 |
| 8142 / 8 | 25.600.2853.0 | 318 |
| 8142 / 8 OB | 25.602.2853.0 | 318 |
| 8142 / 8 / 4 | 25.601.1453.0 | 318 |
| 8142 / 8 / 4 OB | 25.603.1453.0 | 318 |
| 8142 / 9 OB | 25.602.2953.0 | 318 |
| 8142 / 10 | 25.600.3053.0 | 318 |
| 8142 / 10 OB | 25.602.3053.0 | 318 |
| 8142 / 10 / 5 | 25.601.1553.0 | 318 |
| 8142 / 10 / 5 OB | 25.603.1553.0 | 318 |
| 8142 / 11 | 25.600.3153.0 | 318 |
| 8142 / 11 OB | 25.602.3153.0 | 318 |
| 8142 / 12 | 25.600.3253.0 | 318 |
| 8142 / 12 OB | 25.602.3253.0 | 318 |
| 8142 / 12 / 6 | 25.601.1653.0 | 318 |
| 8142 / 12 / 6 OB | 25.603.1653.0 | 318 |
| 8142 / 13 | 25.600.3353.0 | 318 |
| 8142 / 13 OB | 25.602.3353.0 | 318 |
| 8142 / 14 | 25.600.3453.0 | 318 |
| 8142 / 14 OB | 25.602.3453.0 | 318 |
| 8142 / 14 / 7 | 25.601.1753.0 | 318 |
| 8142 / 14 / 7 OB | 25.603.1753.0 | 318 |
| 8142 / 15 | 25.600.3553.0 | 318 |
| 8142 / 15 OB | 25.602.3553.0 | 318 |
| 8142 / 16 | 25.600.3653.0 | 318 |
| 8142 / 16 OB | 25.602.3653.0 | 318 |
| 8142 / 16 / 8 | 25.601.1853.0 | 318 |
| 8142 / 16 / 8 OB | 25.603.1853.0 | 318 |
| 8152 / 5 TOP H OB | 27.730.0553.0 | 348 |
| 8152 / 5 TOP V OB | 27.720.0553.0 | 348 |
| 8152 / 10 TOP H OB | 27.730.1053.0 | 348 |
| 8152 / 10 TOP V OB | 27.720.1053.0 | 348 |
| 8158 / 2 TOP H OB | 25.790.0253.0 | 353 |
| 8158 / 2 TOP V OB | 25.780.0253.0 | 353 |
| 8158 / 3 TOP H OB | 25.790.0353.0 | 353 |
| 8158 / 3 TOP V OB | 25.780.0353.0 | 353 |
| 8158 / 4 TOP H OB | 25.790.0453.0 | 353 |
| 8158 / 4 TOP V OB | 25.780.0453.0 | 353 |
| 8158 / 5 TOP H OB | 25.790.0553.0 | 353 |
| 8158 / 5 TOP V OB | 25.780.0553.0 | 353 |
| 8158 / 6 TOP H OB | 25.790.0653.0 | 353 |
| 8158 / 6 TOP V OB | 25.780.0653.0 | 353 |
| 8158 / 7 TOP H OB | 25.790.0753.0 | 353 |
| 8158 / 7 TOP V OB | 25.780.0753.0 | 353 |
| 8158 / 8 TOP H OB | 25.790.0853.0 | 353 |
| 8158 / 8 TOP V OB | 25.780.0853.0 | 353 |
| 8158 / 9 TOP H OB | 25.790.0953.0 | 353 |
| 8158 / 9 TOP V OB | 25.780.0953.0 | 353 |
| 8158 / 10 TOP H OB | 25.790.1053.0 | 353 |
| 8158 / 10 TOP V OB | 25.780.1053.0 | 353 |
| 8158 / 11 TOP H OB | 25.790.1153.0 | 353 |
| 8158 / 11 TOP V OB | 25.780.1153.0 | 353 |
| 8158 / 12 TOP H OB | 25.790.1253.0 | 353 |
| 8158 / 12 TOP V OB | 25.780.1253.0 | 353 |
| 8158 / 13 TOP H OB | 25.790.1353.0 | 353 |
| 8158 / 13 TOP V OB | 25.780.1353.0 | 353 |
| 8158 / 14 TOP H OB | 25.790.1453.0 | 353 |
| 8158 / 14 TOP V OB | 25.780.1453.0 | 353 |
| 8158 / 15 TOP H OB | 25.790.1553.0 | 353 |
| 8158 / 15 TOP V OB | 25.780.1553.0 | 353 |
| 8158 / 16 TOP H OB | 25.790.1653.0 | 353 |
| 8158 / 16 TOP V OB | 25.780.1653.0 | 353 |
| 8185 TOP H | 25.741.3953.0 | 350 |
| 8185 TOP H | 25.741.4153.0 | 350 |
| 8185 TOP H | 25.741.4353.0 | 350 |
| 8185 TOP H | 25.741.4453.0 | 350 |
| 8185 TOP H | 25.741.4553.0 | 350 |
| 8185 TOP V | 25.741.1353.0 | 349 |
| 8185 TOP V | 25.741.1553.0 | 349 |
| 8185/ 1 TOP H | 25.741.0153.0 | 350 |
| 8185/ 1 TOP V | 25.741.0053.0 | 349 |
| 8185/ 2 TOP H | 25.741.3253.0 | 350 |
| 8185/ 2 TOP V | 25.741.0253.0 | 349 |
| 8185/ 3 TOP H | 25.741.3353.0 | 350 |
| 8185/ 3 TOP V | 25.741.0353.0 | 349 |
| 8185/ 4 TOP H | 25.741.3453.0 | 350 |
| 8185/ 4 TOP V | 25.741.0453.0 | 349 |
| 8185/ 5 TOP H | 25.741.3553.0 | 350 |
| 8185/ 5 TOP V | 25.741.0553.0 | 349 |
| 8185/ 6 TOP H | 25.741.3653.0 | 350 |
| 8185/ 6 TOP V | 25.741.0653.0 | 349 |
| 8185/ 7 TOP H | 25.741.3753.0 | 350 |
| 8185/ 7 TOP V | 25.741.0753.0 | 349 |
| 8185/ 8 TOP H | 25.741.3853.0 | 350 |
| 8185/ 8 TOP V | 25.741.0853.0 | 349 |
| 8185/ 9 TOP V | 25.741.0953.0 | 349 |
| 8185/ 10 TOP H | 25.741.4053.0 | 350 |
| 8185/ 10 TOP V | 25.741.1053.0 | 349 |
| 8185/ 11 TOP V | 25.741.1153.0 | 349 |
| 8185/ 12 TOP H | 25.741.4253.0 | 350 |
| 8185/ 12 TOP V | 25.741.1253.0 | 349 |
| 8185/ 14 TOP V | 25.741.1453.0 | 349 |
| 8185/ 16 TOP H | 25.741.4653.0 | 350 |
| 8185/ 16 TOP V | 25.741.1653.0 | 349 |
| 8190 / 2 | 25.130.0253.0 | 358 |
| 8190 / 2 OB | 25.131.0253.0 | 358 |
| 8190 / 3 | 25.130.0353.0 | 358 |
| 8190 / 3 OB | 25.131.0353.0 | 358 |
| 8190 / 4 | 25.130.0453.0 | 358 |
| 8190 / 4 / 2 | 25.132.0253.0 | 358 |
| 8190 / 4 / 2 OB | 25.133.0253.0 | 358 |
| 8190 / 4 OB | 25.131.0453.0 | 358 |
| 8190 / 5 | 25.130.0553.0 | 358 |
| 8190 / 5 OB | 25.131.0553.0 | 358 |
| 8190 / 6 | 25.130.0653.0 | 358 |
| 8190 / 6 / 3 | 25.132.0353.0 | 358 |
| 8190 / 6 / 3 OB | 25.133.0353.0 | 358 |
| 8190 / 6 OB | 25.131.0653.0 | 358 |
| 8190 / 7 | 25.130.0753.0 | 358 |
| 8190 / 7 OB | 25.131.0753.0 | 358 |
| 8190 / 8 | 25.130.0853.0 | 358 |
| 8190 / 8 / 4 | 25.132.0453.0 | 358 |
| 8190 / 8 / 4 OB | 25.133.0453.0 | 358 |
| 8190 / 8 OB | 25.131.0853.0 | 358 |
| 8190 / 9 | 25.130.0953.0 | 358 |
| 8190 / 9 OB | 25.131.0953.0 | 358 |
| 8190 / 10 | 25.130.1053.0 | 358 |
| 8190 / 10 / 5 | 25.132.0553.0 | 358 |
| 8190 / 10 / 5 OB | 25.133.0553.0 | 358 |
| 8190 / 10 OB | 25.131.1053.0 | 358 |
| 8190 / 11 | 25.130.1153.0 | 358 |
| 8190 / 11 OB | 25.131.1153.0 | 358 |
| 8190 / 12 | 25.130.1253.0 | 358 |
| 8190 / 12 / 6 | 25.132.0653.0 | 358 |
| 8190 / 12 / 6 OB | 25.133.0653.0 | 358 |
| 8190 / 12 OB | 25.131.1253.0 | 358 |
| 8190 / 13 | 25.130.1353.0 | 358 |
| 8190 / 13 OB | 25.131.1353.0 | 358 |
| 8190 / 14 | 25.130.1453.0 | 358 |
| 8190 / 14 / 7 | 25.132.0753.0 | 358 |
| 8190 / 14 / 7 OB | 25.133.0753.0 | 358 |
| 8190 / 14 OB | 25.131.1453.0 | 358 |
| 8190 / 15 | 25.130.1553.0 | 358 |
| 8190 / 15 OB | 25.131.1553.0 | 358 |
| 8190 / 16 | 25.130.1653.0 | 358 |
| 8190 / 16 / 8 | 25.132.0853.0 | 358 |
| 8190 / 16 / 8 OB | 25.133.0853.0 | 358 |
| 8190 / 16 OB | 25.131.1653.0 | 358 |
| 8190 / 18 / 9 | 25.132.0953.0 | 358 |
| 8190 / 18 / 9 OB | 25.133.0953.0 | 358 |
| 8190 / 20 / 10 | 25.132.1053.0 | 358 |
| 8190 / 20 / 10 OB | 25.133.1053.0 | 358 |
| 8190 / 22 / 11 | 25.132.1153.0 | 358 |
| 8190 / 22 / 11 OB | 25.133.1153.0 | 358 |
| 8190 / 24 / 12 | 25.132.1253.0 | 358 |
| 8190 / 24 / 12 OB | 25.133.1253.0 | 358 |
| 8190 E / 2 / 4 | 25.130.3253.0 | 368 |
| 8190 E / 2 / 4 OB | 25.131.3253.0 | 368 |
| 8190 E / 3 / 6 | 25.130.3353.0 | 368 |
| 8190 E / 3 / 6 OB | 25.131.3353.0 | 368 |
| 8190 E / 4 / 8 | 25.130.3453.0 | 368 |
| 8190 E / 4 / 8 OB | 25.131.3453.0 | 368 |
| 8190 E / 5 / 10 | 25.130.3553.0 | 368 |
| 8190 E / 5 / 10 OB | 25.131.3553.0 | 368 |
| 8190 E / 6 / 12 | 25.130.3653.0 | 368 |
| 8190 E / 6 / 12 OB | 25.131.3653.0 | 368 |
| 8190 E / 7 / 14 | 25.130.3753.0 | 368 |
| 8190 E / 7 / 14 OB | 25.131.3753.0 | 368 |
| 8190 E / 8 / 16 | 25.130.3853.0 | 368 |
| 8190 E / 8 / 16 OB | 25.131.3853.0 | 368 |
| 8190 E / 9 / 18 | 25.130.3953.0 | 368 |
| 8190 E / 9 / 18 OB | 25.131.3953.0 | 368 |
| 8190 E / 10 / 20 | 25.130.4053.0 | 368 |
| 8190 E / 10 / 20 OB | 25.131.4053.0 | 368 |
| 8190 E / 11 / 22 | 25.130.4153.0 | 368 |
| 8190 E / 11 / 22 OB | 25.131.4153.0 | 368 |
| 8190 E / 12 / 24 | 25.130.4253.0 | 368 |
| 8190 E / 12 / 24 OB | 25.131.4253.0 | 368 |
| 8191 / 2 | 25.160.0253.0 | 344 |
| 8191 / 2 OB | 25.161.0253.0 | 344 |
| 8191 / 2 WVL OB | 25.161.2853.0 | 594 |
| 8191 / 2 WVR OB | 25.161.2553.0 | 594 |
| 8191 / 2 ZN | 25.170.0253.0 | 344 |
| 8191 / 2 ZN OB | 25.171.0253.0 | 344 |
| 8191 / 2 ZW | 25.160.6253.0 | 345 |
| 8191 / 2 ZW OB | 25.161.6253.0 | 345 |
| 8191 / 3 | 25.160.0353.0 | 344 |
| 8191 / 3 OB | 25.161.0353.0 | 344 |
| 8191 / 3 WVL OB | 25.161.2953.0 | 594 |
| 8191 / 3 WVR OB | 25.161.2653.0 | 594 |
| 8191 / 3 ZN | 25.170.0353.0 | 344 |
| 8191 / 3 ZN OB | 25.171.0353.0 | 344 |
| 8191 / 3 ZW | 25.160.6353.0 | 345 |
| 8191 / 3 ZW OB | 25.161.6353.0 | 345 |
| 8191 / 3/ 2 | 25.168.0253.0 | 344 |
| 8191 / 3/ 2 OB | 25.169.0253.0 | 344 |
| 8191 / 3/ 2 Z | 25.168.2253.0 | 345 |
| 8191 / 3/ 2 Z OB | 25.169.2253.0 | 345 |
| 8191 / 3/ 2 ZN | 25.168.6253.0 | 344 |
| 8191 / 3/ 2 ZN OB | 25.169.6253.0 | 344 |
| 8191 / 3/ 2 ZW | 25.168.4253.0 | 345 |
| 8191 / 3/ 2 ZW OB | 25.169.4253.0 | 345 |
| 8191 / 4 | 25.160.0453.0 | 344 |
| 8191 / 4 OB | 25.161.0453.0 | 344 |
| 8191 / 4 ZW | 25.160.6453.0 | 345 |
| 8191 / 4 ZW OB | 25.161.6453.0 | 345 |
| 8191 / 5 | 25.160.0553.0 | 344 |
| 8191 / 5 OB | 25.161.0553.0 | 344 |
| 8191 / 5 ZW | 25.160.6553.0 | 345 |
| 8191 / 5 ZW OB | 25.161.6553.0 | 345 |
| 8191 / 5/ 3 | 25.168.0353.0 | 344 |
| 8191 / 5/ 3 OB | 25.169.0353.0 | 344 |
| 8191 / 5/ 3 Z | 25.168.2353.0 | 345 |
| 8191 / 5/ 3 Z OB | 25.169.2353.0 | 345 |
| 8191 / 5/ 3 ZN | 25.168.6353.0 | 344 |
| 8191 / 5/ 3 ZN OB | 25.169.6353.0 | 344 |
| 8191 / 5/ 3 ZW | 25.168.4353.0 | 345 |
| 8191 / 5/ 3 ZW OB | 25.169.4353.0 | 345 |
| 8191 / 6 | 25.160.0653.0 | 344 |
| 8191 / 6 OB | 25.161.0653.0 | 344 |
| 8191 / 6 ZW | 25.160.6653.0 | 345 |
| 8191 / 6 ZW OB | 25.161.6653.0 | 345 |
| 8191 / 7 | 25.160.0753.0 | 344 |
| 8191 / 7 OB | 25.161.0753.0 | 344 |
| 8191 / 7 ZW | 25.160.6753.0 | 345 |
| 8191 / 7 ZW OB | 25.161.6753.0 | 345 |
| 8191 / 8 | 25.160.0853.0 | 344 |
| 8191 / 8 OB | 25.161.0853.0 | 344 |
| 8191 / 8 ZW | 25.160.6853.0 | 345 |
| 8191 / 8 ZW OB | 25.161.6853.0 | 345 |
| 8191 / 9 | 25.160.0953.0 | 344 |
| 8191 / 9 OB | 25.161.0953.0 | 344 |
| 8191 / 9 ZW | 25.160.6953.0 | 345 |
| 8191 / 9 ZW OB | 25.161.6953.0 | 345 |
| 8191 / 10 | 25.160.1053.0 | 344 |
| 8191 / 10 OB | 25.161.1053.0 | 344 |
| 8191 / 10 ZW | 25.160.7053.0 | 345 |
| 8191 / 10 ZW OB | 25.161.7053.0 | 345 |
| 8191 / 11 | 25.160.1153.0 | 344 |
| 8191 / 11 OB | 25.161.1153.0 | 344 |
| 8191 / 11 ZW | 25.160.7153.0 | 345 |
| 8191 / 11 ZW OB | 25.161.7153.0 | 345 |
| 8191 / 12 | 25.160.1253.0 | 344 |
| 8191 / 12 OB | 25.161.1253.0 | 344 |
| 8191 / 12 ZW | 25.160.7253.0 | 345 |
| 8191 / 12 ZW OB | 25.161.7253.0 | 345 |
| 8191 / 13 | 25.160.1353.0 | 344 |
| 8191 / 13 OB | 25.161.1353.0 | 344 |
| 8191 / 13 ZW | 25.160.7353.0 | 345 |
| 8191 / 13 ZW OB | 25.161.7353.0 | 345 |
| 8191 / 14 | 25.160.1453.0 | 344 |
| 8191 / 14 OB | 25.161.1453.0 | 344 |
| 8191 / 14 ZW | 25.160.7453.0 | 345 |
| 8191 / 14 ZW OB | 25.161.7453.0 | 345 |
| 8191 / 15 | 25.160.1553.0 | 344 |
| 8191 / 15 OB | 25.161.1553.0 | 344 |
| 8191 / 15 ZW | 25.160.7553.0 | 345 |
| 8191 / 15 ZW OB | 25.161.7553.0 | 345 |
| 8191 / 16 | 25.160.1653.0 | 344 |
| 8191 / 16 OB | 25.161.1653.0 | 344 |
| 8191 / 16 ZW | 25.160.7653.0 | 345 |
| 8191 / 16 ZW OB | 25.161.7653.0 | 345 |
| 8191 D / 2 / 6 | 25.180.0253.0 | 370 |
| 8191 D / 2 / 6 OB | 25.180.5253.0 | 370 |
| 8191 D / 2 / 6 ZN | 25.180.4253.0 | 370 |
| 8191 D / 2 / 6 ZN OB | 25.180.9253.0 | 370 |
| 8191 D / 3 / 9 | 25.180.0353.0 | 370 |
| 8191 D / 3 / 9 OB | 25.180.5353.0 | 370 |
| 8191 D / 3 / 9 ZN | 25.180.4353.0 | 370 |
| 8191 D / 3 / 9 ZN OB | 25.180.9353.0 | 370 |
| 8191 D / 4 / 12 | 25.180.0453.0 | 370 |
| 8191 D / 4 / 12 OB | 25.180.5453.0 | 370 |
| 8191 D / 5 / 15 | 25.180.0553.0 | 370 |
| 8191 D / 5 / 15 OB | 25.180.5553.0 | 370 |
| 8191 D / 6 / 18 | 25.180.0653.0 | 370 |
| 8191 D / 6 / 18 OB | 25.180.5653.0 | 370 |
| 8191 D / 7 / 21 | 25.180.0753.0 | 370 |
| 8191 D / 7 / 21 OB | 25.180.5753.0 | 370 |
| 8191 D / 8 / 24 | 25.180.0853.0 | 370 |
| 8191 D / 8 / 24 OB | 25.180.5853.0 | 370 |
| 8191 D / 9 / 27 OB | 25.180.5953.0 | 370 |
| 8191 D / 10 / 30 | 25.180.1053.0 | 370 |
| 8191 D / 10 / 30 OB | 25.180.6053.0 | 370 |
| 8191 D / 11 / 33 | 25.180.1153.0 | 370 |
| 8191 D / 11 / 33 OB | 25.180.6153.0 | 370 |
| 8191 D / 12 / 36 | 25.180.1253.0 | 370 |
| 8191 D / 12 / 36 OB | 25.180.6253.0 | 370 |
| 8191 E / 2 / 4 | 25.178.0253.0 | 366 |
| 8191 E / 2 / 4 OB | 25.178.5253.0 | 366 |
| 8191 E / 2 / 4 ZN | 25.178.4253.0 | 366 |
| 8191 E / 2 / 4 ZN OB | 25.178.9253.0 | 366 |
| 8191 E / 3 / 6 | 25.178.0353.0 | 366 |
| 8191 E / 3 / 6 OB | 25.178.5353.0 | 366 |
| 8191 E / 3 / 6 ZN | 25.178.4353.0 | 366 |
| 8191 E / 3 / 6 ZN OB | 25.178.9353.0 | 366 |
| 8191 E / 4 / 8 | 25.178.0453.0 | 366 |
| 8191 E / 4 / 8 OB | 25.178.5453.0 | 366 |
| 8191 E / 5 / 10 | 25.178.0553.0 | 366 |
| 8191 E / 5 / 10 OB | 25.178.5553.0 | 366 |
| 8191 E / 6 / 12 | 25.178.0653.0 | 366 |
| 8191 E / 6 / 12 OB | 25.178.5653.0 | 366 |
| 8191 E / 7 / 14 | 25.178.0753.0 | 366 |
| 8191 E / 7 / 14 OB | 25.178.5753.0 | 366 |
| 8191 E / 8 / 16 | 25.178.0853.0 | 366 |
| 8191 E / 8 / 16 OB | 25.178.5853.0 | 366 |
| 8191 E / 9 / 18 | 25.178.0953.0 | 366 |
| 8191 E / 9 / 18 OB | 25.178.5953.0 | 366 |
| 8191 E / 10 / 20 | 25.178.1053.0 | 366 |
| 8191 E / 10 / 20 OB | 25.178.6053.0 | 366 |
| 8191 E / 11 / 22 | 25.178.1153.0 | 366 |
| 8191 E / 11 / 22 OB | 25.178.6153.0 | 366 |
| 8191 E / 12 / 24 | 25.178.1253.0 | 366 |
| 8191 E / 12 / 24 OB | 25.178.6253.0 | 366 |
| 8191 R / 2 Z | 25.155.2253.0 | 342 |
| 8191 R / 2 Z OB | 25.155.0253.0 | 342 |
| 8191 R / 3 Z | 25.155.2353.0 | 342 |
| 8191 R / 3 Z OB | 25.155.0353.0 | 342 |
| 8191 R / 3/ 2 Z | 25.157.1253.0 | 343 |
| 8191 R / 3/ 2 Z OB | 25.157.0253.0 | 343 |
| 8191 R / 4 Z | 25.155.2453.0 | 342 |
| 8191 R / 4 Z OB | 25.155.0453.0 | 342 |
| 8191 R / 5 Z | 25.155.2553.0 | 342 |
| 8191 R / 5 Z OB | 25.155.0553.0 | 342 |
| 8191 R / 5/ 3 Z | 25.157.1353.0 | 343 |
| 8191 R / 5/ 3 Z OB | 25.157.0353.0 | 343 |
| 8191 R / 6 Z | 25.155.2653.0 | 342 |

# contents of type description

# contents TYPE


| Type | Part no. | section / page |
|---|---|---|
| 8191 R / 6 Z OB | 25.155.0653.0 | 342 |
| 8191 R / 7 Z | 25.155.2753.0 | 342 |
| 8191 R / 7 Z OB | 25.155.0753.0 | 342 |
| 8191 R / 7/ 4 Z | 25.157.1453.0 | 343 |
| 8191 R / 7/ 4 Z OB | 25.157.0453.0 | 343 |
| 8191 R / 8 Z | 25.155.2853.0 | 342 |
| 8191 R / 8 Z OB | 25.155.0853.0 | 342 |
| 8191 R / 9 Z | 25.155.2953.0 | 342 |
| 8191 R / 9 Z OB | 25.155.0953.0 | 342 |
| 8191 R / 9/ 5 Z | 25.157.1553.0 | 343 |
| 8191 R / 9/ 5 Z OB | 25.157.0553.0 | 343 |
| 8191 R / 10 Z | 25.155.3053.0 | 342 |
| 8191 R / 10 Z OB | 25.155.1053.0 | 342 |
| 8191 R / 11 Z | 25.155.3153.0 | 342 |
| 8191 R / 11 Z OB | 25.155.1153.0 | 342 |
| 8191 R / 11/ 6 Z | 25.157.1653.0 | 343 |
| 8191 R / 11/ 6 Z OB | 25.157.0653.0 | 343 |
| 8191 R / 12 Z | 25.155.3253.0 | 342 |
| 8191 R / 12 Z OB | 25.155.1253.0 | 342 |
| 8191 R / 13 Z | 25.155.3353.0 | 342 |
| 8191 R / 13 Z OB | 25.155.1353.0 | 342 |
| 8191 R / 13/ 7 Z | 25.157.1753.0 | 343 |
| 8191 R / 13/ 7 Z OB | 25.157.0753.0 | 343 |
| 8191 R / 14 Z | 25.155.3453.0 | 342 |
| 8191 R / 14 Z OB | 25.155.1453.0 | 342 |
| 8192 / 2 | 25.190.0253.0 | 338 |
| 8192 / 2 OB | 25.191.0253.0 | 338 |
| 8192 / 2 ZN | 25.190.9253.0 | 338 |
| 8192 / 2 ZN OB | 25.191.9253.0 | 338 |
| 8192 / 2 ZW OB | 25.191.6253.0 | 339 |
| 8192 / 3 | 25.190.0353.0 | 338 |
| 8192 / 3 OB | 25.191.0353.0 | 338 |
| 8192 / 3 ZN | 25.190.9353.0 | 338 |
| 8192 / 3 ZN OB | 25.191.9353.0 | 338 |
| 8192 / 3 ZW OB | 25.191.6353.0 | 339 |
| 8192 / 4 | 25.190.0453.0 | 338 |
| 8192 / 4 OB | 25.191.0453.0 | 338 |
| 8192 / 4 ZW OB | 25.191.6453.0 | 339 |
| 8192 / 5 | 25.190.0553.0 | 338 |
| 8192 / 5 OB | 25.191.0553.0 | 338 |
| 8192 / 5 ZW OB | 25.191.6553.0 | 339 |
| 8192 / 6 | 25.190.0653.0 | 338 |
| 8192 / 6 OB | 25.191.0653.0 | 338 |
| 8192 / 6 ZW OB | 25.191.6653.0 | 339 |
| 8192 / 7 | 25.190.0753.0 | 338 |
| 8192 / 7 OB | 25.191.0753.0 | 338 |
| 8192 / 7 ZW OB | 25.191.6753.0 | 339 |
| 8192 / 8 | 25.190.0853.0 | 338 |
| 8192 / 8 OB | 25.191.0853.0 | 338 |
| 8192 / 8 ZW OB | 25.191.6853.0 | 339 |
| 8192 / 9 | 25.190.0953.0 | 338 |
| 8192 / 9 OB | 25.191.0953.0 | 338 |
| 8192 / 9 ZW OB | 25.191.6953.0 | 339 |
| 8192 / 10 | 25.190.1053.0 | 338 |
| 8192 / 10 OB | 25.191.1053.0 | 338 |
| 8192 / 10 ZW OB | 25.191.7053.0 | 339 |
| 8192 / 11 | 25.190.1153.0 | 338 |
| 8192 / 11 OB | 25.191.1153.0 | 338 |
| 8192 / 11 ZW OB | 25.191.7153.0 | 339 |
| 8192 / 12 | 25.190.1253.0 | 338 |
| 8192 / 12 OB | 25.191.1253.0 | 338 |
| 8192 / 12 ZW OB | 25.191.7253.0 | 339 |
| 8192 / 13 | 25.190.1353.0 | 338 |
| 8192 / 13 OB | 25.191.1353.0 | 338 |
| 8192 / 13 ZW OB | 25.191.7353.0 | 339 |
| 8192 / 14 | 25.190.1453.0 | 338 |
| 8192 / 14 OB | 25.191.1453.0 | 338 |
| 8192 / 14 ZW OB | 25.191.7453.0 | 339 |
| 8192 / 15 | 25.190.1553.0 | 338 |
| 8192 / 15 OB | 25.191.1553.0 | 338 |
| 8192 / 15 ZW OB | 25.191.7553.0 | 339 |
| 8192 / 16 | 25.190.1653.0 | 338 |
| 8192 / 16 OB | 25.191.1653.0 | 338 |
| 8192 / 16 ZW OB | 25.191.7653.0 | 339 |
| 8192 E / 12 / 24 OB | 25.198.6253.0 | 364 |
| 8192 E / 2 / 4 | 25.198.0253.0 | 364 |
| 8192 E / 2 / 4 OB | 25.198.5253.0 | 364 |
| 8192 E / 2 / 4 ZN | 25.198.4253.0 | 364 |
| 8192 E / 2 / 4 ZN OB | 25.198.9253.0 | 364 |
| 8192 E / 3 / 6 | 25.198.0353.0 | 364 |
| 8192 E / 3 / 6 OB | 25.198.5353.0 | 364 |
| 8192 E / 3 / 6 ZN | 25.198.4353.0 | 364 |
| 8192 E / 3 / 6 ZN OB | 25.198.9353.0 | 364 |
| 8192 E / 4 / 8 | 25.198.0453.0 | 364 |
| 8192 E / 4 / 8 OB | 25.198.5453.0 | 364 |
| 8192 E / 5 / 10 | 25.198.0553.0 | 364 |
| 8192 E / 5 / 10 OB | 25.198.5553.0 | 364 |
| 8192 E / 6 / 12 | 25.198.0653.0 | 364 |
| 8192 E / 6 / 12 OB | 25.198.5653.0 | 364 |
| 8192 E / 7 / 14 | 25.198.0753.0 | 364 |
| 8192 E / 7 / 14 OB | 25.198.5753.0 | 364 |
| 8192 E / 8 / 16 | 25.198.0853.0 | 364 |
| 8192 E / 8 / 16 OB | 25.198.5853.0 | 364 |
| 8192 E / 9 / 18 | 25.198.0953.0 | 364 |
| 8192 E / 9 / 18 OB | 25.198.5953.0 | 364 |
| 8192 E / 10 / 20 | 25.198.1053.0 | 364 |
| 8192 E / 10 / 20 OB | 25.198.6053.0 | 364 |
| 8192 E / 11 / 22 | 25.198.1153.0 | 364 |
| 8192 E / 11 / 22 OB | 25.198.6153.0 | 364 |
| 8192 E / 12 / 24 | 25.198.1253.0 | 364 |
| 8195 D/ 2/ 6 | 25.153.0253.0 | 372 |
| 8195 D/ 2/ 6 OB | 25.153.2253.0 | 372 |
| 8195 D/ 2/ 6 VB1 | 25.153.4253.0 | 372 |
| 8195 D/ 2/ 6 VB1 OB | 25.153.6253.0 | 372 |
| 8195 D/ 3/ 9 | 25.153.0353.0 | 372 |
| 8195 D/ 3/ 9 OB | 25.153.2353.0 | 372 |
| 8195 D/ 3/ 9 VB1 | 25.153.4353.0 | 372 |
| 8195 D/ 3/ 9 VB1 OB | 25.153.6353.0 | 372 |
| 8195 D/ 4/12 | 25.153.0453.0 | 372 |
| 8195 D/ 4/12 OB | 25.153.2453.0 | 372 |
| 8195 D/ 4/12 VB1 | 25.153.4453.0 | 372 |
| 8195 D/ 4/12 VB1 OB | 25.153.6453.0 | 372 |
| 8195 D/ 5/15 | 25.153.0553.0 | 372 |
| 8195 D/ 5/15 OB | 25.153.2553.0 | 372 |
| 8195 D/ 5/15 VB1 | 25.153.4553.0 | 372 |
| 8195 D/ 5/15 VB1 OB | 25.153.6553.0 | 372 |
| 8195 D/ 6/18 | 25.153.0653.0 | 372 |
| 8195 D/ 6/18 OB | 25.153.2653.0 | 372 |
| 8195 D/ 6/18 VB1 | 25.153.4653.0 | 372 |
| 8195 D/ 6/18 VB1 OB | 25.153.6653.0 | 372 |
| 8195 D/ 7/21 | 25.153.0753.0 | 372 |
| 8195 D/ 7/21 OB | 25.153.2753.0 | 372 |
| 8195 D/ 7/21 VB1 | 25.153.4753.0 | 372 |
| 8195 D/ 7/21 VB1 OB | 25.153.6753.0 | 372 |
| 8195 D/ 8/24 | 25.153.0853.0 | 372 |
| 8195 D/ 8/24 OB | 25.153.2853.0 | 372 |
| 8195 D/ 8/24 VB1 | 25.153.4853.0 | 372 |
| 8195 D/ 8/24 VB1 OB | 25.153.6853.0 | 372 |
| 8195 D/ 9/27 | 25.153.0953.0 | 372 |
| 8195 D/ 9/27 OB | 25.153.2953.0 | 372 |
| 8195 D/ 9/27 VB1 | 25.153.4953.0 | 372 |
| 8195 D/ 9/27 VB1 OB | 25.153.6953.0 | 372 |
| 8195 D/ 10/30 | 25.153.1053.0 | 372 |
| 8195 D/ 10/30 OB | 25.153.3053.0 | 372 |
| 8195 D/ 10/30 VB1 | 25.153.5053.0 | 372 |
| 8195 D/ 10/30 VB1 OB | 25.153.7053.0 | 372 |
| 8195 V/ 2/ 8 | 25.154.0253.0 | 373 |
| 8195 V/ 2/ 8 OB | 25.154.2253.0 | 373 |
| 8195 V/ 2/ 8 VB1 | 25.154.4253.0 | 373 |
| 8195 V/ 2/ 8 VB1 OB | 25.154.6253.0 | 373 |
| 8195 v/ 3/12 | 25.154.0353.0 | 373 |
| 8195 V/ 3/12 VB1 | 25.154.4353.0 | 373 |
| 8195 V/ 3/12 VB1 OB | 25.154.6353.0 | 373 |
| 8195 V/ 4/16 | 25.154.0453.0 | 373 |
| 8195 V/ 4/16 OB | 25.154.2453.0 | 373 |
| 8195 V/ 4/16 VB1 | 25.154.4453.0 | 373 |
| 8195 V/ 4/16 VB1 OB | 25.154.6453.0 | 373 |
| 8195 V/ 5/20 | 25.154.0553.0 | 373 |
| 8195 V/ 5/20 OB | 25.154.2553.0 | 373 |
| 8195 V/ 5/20 VB1 | 25.154.4553.0 | 373 |
| 8195 V/ 5/20 VB1 OB | 25.154.6553.0 | 373 |
| 8195 V/ 6/24 | 25.154.0653.0 | 373 |
| 8195 V/ 6/24 OB | 25.154.2653.0 | 373 |
| 8195 V/ 6/24 VB1 | 25.154.4653.0 | 373 |
| 8195 V/ 6/24 VB1 OB | 25.154.6653.0 | 373 |
| 8195 V/ 7/28 | 25.154.0753.0 | 373 |
| 8195 V/ 7/28 OB | 25.154.2753.0 | 373 |
| 8195 V/ 7/28 VB1 | 25.154.4753.0 | 373 |
| 8195 V/ 7/28 VP1 OB | 25.154.6753.0 | 373 |
| 8195 V/ 8/32 | 25.154.0853.0 | 373 |
| 8195 V/ 8/32 OB | 25.154.2853.0 | 373 |
| 8195 V/ 8/32 VB1 | 25.154.4853.0 | 373 |
| 8195 V/ 8/32 VB1 OB | 25.154.6853.0 | 373 |
| 8195 V/ 9/36 | 25.154.0953.0 | 373 |
| 8195 V/ 9/36 OB | 25.154.2953.0 | 373 |
| 8195 V/ 9/36 VB1 | 25.154.4953.0 | 373 |
| 8195 V/ 9/36 VB1 OB | 25.154.6953.0 | 373 |
| 8195 V/ 10/40 | 25.154.1053.0 | 373 |
| 8195 V/ 10/40 OB | 25.154.3053.0 | 373 |
| 8195 V/ 10/40 VB1 | 25.154.5053.0 | 373 |
| 8213 B / 2 | 25.340.0253.0 | 286 |
| 8213 B / 2 F | 25.323.0253.0 | 286 |
| 8213 B / 2 F OB | 25.323.3253.0 | 286 |
| 8213 B / 2 OB | 25.340.3253.0 | 286 |
| 8213 B / 2 TOP | 25.240.0253.0 | 296 |
| 8213 B / 2 TOP OB | 25.240.3253.0 | 296 |
| 8213 B / 2 VL | 25.346.0253.0 | 289 |
| 8213 B / 2 VL OB | 25.346.3253.0 | 289 |
| 8213 B / 2 VR | 25.345.0253.0 | 289 |
| 8213 B / 2 VR OB | 25.345.3253.0 | 289 |
| 8213 B / 3 | 25.340.0353.0 | 286 |
| 8213 B / 3 F | 25.323.0353.0 | 286 |
| 8213 B / 3 F OB | 25.323.3353.0 | 286 |
| 8213 B / 3 OB | 25.340.3353.0 | 286 |
| 8213 B / 3 TOP | 25.240.0353.0 | 296 |
| 8213 B / 3 TOP OB | 25.240.3353.0 | 296 |
| 8213 B / 3 VL | 25.346.0353.0 | 289 |
| 8213 B / 3 VL OB | 25.346.3353.0 | 289 |
| 8213 B / 3 VR | 25.345.0353.0 | 289 |
| 8213 B / 3 VR OB | 25.345.3353.0 | 289 |
| 8213 B / 4 | 25.340.0453.0 | 286 |
| 8213 B / 4 F | 25.323.0453.0 | 286 |
| 8213 B / 4 F OB | 25.323.3453.0 | 286 |
| 8213 B / 4 OB | 25.340.3453.0 | 286 |
| 8213 B / 4 TOP | 25.240.0453.0 | 296 |
| 8213 B / 4 TOP OB | 25.240.3453.0 | 296 |
| 8213 B / 4 VL | 25.346.0453.0 | 289 |
| 8213 B / 4 VL OB | 25.346.3453.0 | 289 |
| 8213 B / 4 VR | 25.345.0453.0 | 289 |
| 8213 B / 4 VR OB | 25.345.3453.0 | 289 |
| 8213 B / 5 | 25.340.0553.0 | 286 |
| 8213 B / 5 F | 25.323.0553.0 | 286 |
| 8213 B / 5 F OB | 25.323.3553.0 | 286 |
| 8213 B / 5 F OB GOLD | 25.323.3501.0 | 411 |
| 8213 B / 5 OB | 25.340.3553.0 | 286 |
| 8213 B / 5 S OB | 27.341.3553.0 | 287 |
| 8213 B / 5 TOP | 25.240.0553.0 | 296 |
| 8213 B / 5 TOP OB | 25.240.3553.0 | 296 |
| 8213 B / 5 VL | 25.346.0553.0 | 289 |
| 8213 B / 5 VL OB | 25.346.3553.0 | 289 |
| 8213 B / 5 VR | 25.345.0553.0 | 289 |
| 8213 B / 5 VR OB | 25.345.3553.0 | 289 |
| 8213 B / 6 | 25.340.0653.0 | 286 |
| 8213 B / 6 F | 25.323.0653.0 | 286 |
| 8213 B / 6 F OB | 25.323.3653.0 | 286 |
| 8213 B / 6 OB | 25.340.3653.0 | 286 |
| 8213 B / 6 TOP | 25.240.0653.0 | 296 |
| 8213 B / 6 TOP OB | 25.240.3653.0 | 296 |
| 8213 B / 6 VL | 25.346.0653.0 | 289 |
| 8213 B / 6 VL OB | 25.346.3653.0 | 289 |
| 8213 B / 6 VR | 25.345.0653.0 | 289 |
| 8213 B / 6 VR OB | 25.345.3653.0 | 289 |
| 8213 B / 7 | 25.340.0753.0 | 286 |
| 8213 B / 7 F | 25.323.0753.0 | 286 |
| 8213 B / 7 F OB | 25.323.3753.0 | 286 |
| 8213 B / 7 OB | 25.340.3753.0 | 286 |
| 8213 B / 7 TOP | 25.240.0753.0 | 296 |
| 8213 B / 7 TOP OB | 25.240.3753.0 | 296 |
| 8213 B / 7 VL | 25.346.0753.0 | 289 |
| 8213 B / 7 VL OB | 25.346.3753.0 | 289 |
| 8213 B / 7 VR | 25.345.0753.0 | 289 |
| 8213 B / 7 VR OB | 25.345.3753.0 | 289 |
| 8213 B / 8 | 25.340.0853.0 | 286 |
| 8213 B / 8 F | 25.323.0853.0 | 286 |
| 8213 B / 8 F OB | 25.323.3853.0 | 286 |
| 8213 B / 8 OB | 25.340.3853.0 | 286 |
| 8213 B / 8 TOP | 25.240.0853.0 | 296 |
| 8213 B / 8 TOP OB | 25.240.3853.0 | 296 |
| 8213 B / 8 VL | 25.346.0853.0 | 289 |
| 8213 B / 8 VL OB | 25.346.3853.0 | 289 |
| 8213 B / 8 VR | 25.345.0853.0 | 289 |
| 8213 B / 8 VR OB | 25.345.3853.0 | 289 |
| 8213 B / 9 | 25.340.0953.0 | 286 |
| 8213 B / 9 F | 25.323.0953.0 | 286 |
| 8213 B / 9 F OB | 25.323.3953.0 | 286 |
| 8213 B / 9 OB | 25.340.3953.0 | 286 |
| 8213 B / 9 TOP | 25.240.0953.0 | 296 |
| 8213 B / 9 TOP OB | 25.240.3953.0 | 296 |
| 8213 B / 9 VL | 25.346.0953.0 | 289 |
| 8213 B / 9 VL OB | 25.346.3953.0 | 289 |
| 8213 B / 9 VR | 25.345.0953.0 | 289 |
| 8213 B / 9 VR OB | 25.345.3953.0 | 289 |
| 8213 B / 10 | 25.340.1053.0 | 286 |
| 8213 B / 10 F | 25.323.1053.0 | 286 |
| 8213 B / 10 F OB | 25.323.4053.0 | 286 |
| 8213 B / 10 OB | 25.340.4053.0 | 286 |
| 8213 B / 10 S OB | 27.341.4053.0 | 287 |
| 8213 B / 10 TOP | 25.240.1053.0 | 296 |
| 8213 B / 10 TOP OB | 25.240.4053.0 | 296 |
| 8213 B / 10 VL | 25.346.1053.0 | 289 |
| 8213 B / 10 VL OB | 25.346.4053.0 | 289 |
| 8213 B / 10 VR | 25.345.1053.0 | 289 |
| 8213 B / 10 VR OB | 25.345.4053.0 | 289 |
| 8213 B / 11 | 25.340.1153.0 | 286 |
| 8213 B / 11 F | 25.323.1153.0 | 286 |
| 8213 B / 11 F OB | 25.323.4153.0 | 286 |
| 8213 B / 11 OB | 25.340.4153.0 | 286 |
| 8213 B / 11 TOP | 25.240.1153.0 | 296 |
| 8213 B / 11 TOP OB | 25.240.4153.0 | 296 |
| 8213 B / 11 VL | 25.346.1153.0 | 289 |
| 8213 B / 11 VL OB | 25.346.4153.0 | 289 |
| 8213 B / 11 VR | 25.345.1153.0 | 289 |
| 8213 B / 11 VR OB | 25.345.4153.0 | 289 |
| 8213 B / 12 | 25.340.1253.0 | 286 |
| 8213 B / 12 F | 25.323.1253.0 | 286 |
| 8213 B / 12 F OB | 25.323.4253.0 | 286 |
| 8213 B / 12 OB | 25.340.4253.0 | 286 |
| 8213 B / 12 TOP | 25.240.1253.0 | 296 |
| 8213 B / 12 TOP OB | 25.240.4253.0 | 296 |
| 8213 B / 12 VL | 25.346.1253.0 | 289 |
| 8213 B / 12 VL OB | 25.346.4253.0 | 289 |
| 8213 B / 12 VR | 25.345.1253.0 | 289 |
| 8213 B / 12 VR OB | 25.345.4253.0 | 289 |
| 8213 B / 13 | 25.340.1353.0 | 286 |
| 8213 B / 13 F | 25.323.1353.0 | 286 |
| 8213 B / 13 F OB | 25.323.4353.0 | 286 |
| 8213 B / 13 OB | 25.340.4353.0 | 286 |
| 8213 B / 13 TOP | 25.240.1353.0 | 296 |
| 8213 B / 13 TOP OB | 25.240.4353.0 | 296 |
| 8213 B / 13 VL | 25.346.1353.0 | 289 |
| 8213 B / 13 VL OB | 25.346.4353.0 | 289 |
| 8213 B / 13 VR | 25.345.1353.0 | 289 |
| 8213 B / 13 VR OB | 25.345.4353.0 | 289 |
| 8213 B / 14 | 25.340.1453.0 | 286 |
| 8213 B / 14 F | 25.323.1453.0 | 286 |
| 8213 B / 14 F OB | 25.323.4453.0 | 286 |
| 8213 B / 14 OB | 25.340.4453.0 | 286 |
| 8213 B / 14 TOP | 25.240.1453.0 | 296 |
| 8213 B / 14 TOP OB | 25.240.4453.0 | 296 |
| 8213 B / 14 VL | 25.346.1453.0 | 289 |
| 8213 B / 14 VL OB | 25.346.4453.0 | 289 |
| 8213 B / 14 VR | 25.345.1453.0 | 289 |
| 8213 B / 14 VR OB | 25.345.4453.0 | 289 |
| 8213 B / 15 | 25.340.1553.0 | 286 |
| 8213 B / 15 F | 25.323.1553.0 | 286 |
| 8213 B / 15 F OB | 25.323.4553.0 | 286 |
| 8213 B / 15 OB | 25.340.4553.0 | 286 |
| 8213 B / 15 TOP | 25.240.1553.0 | 296 |
| 8213 B / 15 TOP OB | 25.240.4553.0 | 296 |
| 8213 B / 15 VL | 25.346.1553.0 | 289 |
| 8213 B / 15 VL OB | 25.346.4553.0 | 289 |
| 8213 B / 15 VR | 25.345.1553.0 | 289 |
| 8213 B / 15 VR OB | 25.345.4553.0 | 289 |
| 8213 B / 16 | 25.340.1653.0 | 286 |
| 8213 B / 16 F | 25.323.1653.0 | 286 |
| 8213 B / 16 F OB | 25.323.4653.0 | 286 |
| 8213 B / 16 OB | 25.340.4653.0 | 286 |
| 8213 B / 16 TOP | 25.240.1653.0 | 296 |
| 8213 B / 16 TOP OB | 25.240.4653.0 | 296 |
| 8213 B / 16 VL | 25.346.1653.0 | 289 |
| 8213 B / 16 VL OB | 25.346.4653.0 | 289 |

# contents


| Type | Part no. | section / page |
|---|---|---|
| 8213 B / 16 VR | 25.345.1653.0 | 289 |
| 8213 B / 16 VR OB | 25.345.4653.0 | 289 |
| 8213 BFK / 2 TOP K | 25.840.0253.0 | 292 |
| 8213 BFK / 2 TOP K OB | 25.840.3253.0 | 292 |
| 8213 BFK / 3 TOP K | 25.840.0353.0 | 292 |
| 8213 BFK / 3 TOP K OB | 25.840.3353.0 | 292 |
| 8213 BFK / 4 TOP K | 25.840.0453.0 | 292 |
| 8213 BFK / 5 TOP K | 25.840.0553.0 | 292 |
| 8213 BFK / 5 TOP K OB | 25.840.3553.0 | 292 |
| 8213 BFK / 6 TOP K | 25.840.0653.0 | 292 |
| 8213 BFK / 6 TOP K OB | 25.840.3653.0 | 292 |
| 8213 BFK / 7 TOP K | 25.840.0753.0 | 292 |
| 8213 BFK / 7 TOP K OB | 25.840.3753.0 | 292 |
| 8213 BFK / 8 TOP K | 25.840.0853.0 | 292 |
| 8213 BFK / 8 TOP K OB | 25.840.3853.0 | 292 |
| 8213 BFK / 9 TOP K | 25.840.0953.0 | 292 |
| 8213 BFK / 9 TOP K OB | 25.840.3953.0 | 292 |
| 8213 BFK /10 TOP K | 25.840.1053.0 | 292 |
| 8213 BFK /10 TOP K OB | 25.840.4053.0 | 292 |
| 8213 BFK /11 TOP K | 25.840.1153.0 | 292 |
| 8213 BFK /11 TOP K OB | 25.840.4153.0 | 292 |
| 8213 BFK /12 TOP K | 25.840.1253.0 | 292 |
| 8213 BFK /12 TOP K OB | 25.840.4253.0 | 292 |
| 8213 BFK /13 TOP K | 25.840.1353.0 | 292 |
| 8213 BFK /13 TOP K OB | 25.840.4353.0 | 292 |
| 8213 BFK /14 TOP K | 25.840.1453.0 | 292 |
| 8213 BFK /14 TOP K OB | 25.840.4453.0 | 292 |
| 8213 BFK /15 TOP K | 25.840.1553.0 | 292 |
| 8213 BFK /15 TOP K OB | 25.840.4553.0 | 292 |
| 8213 BFK /16 TOP K | 25.840.1653.0 | 292 |
| 8213 BFK /16 TOP K OB | 25.840.4653.0 | 292 |
| 8213 BFK/12 TOP K F | 25.841.1253.0 | 292 |
| 8213 BL / 2 G | 25.342.0253.0 | 295 |
| 8213 BL / 2 G OB | 25.342.3253.0 | 295 |
| 8213 BL / 2 W | 25.343.0253.0 | 295 |
| 8213 BL / 2 W OB | 25.343.3253.0 | 295 |
| 8213 BL / 3 G | 25.342.0353.0 | 295 |
| 8213 BL / 3 G OB | 25.342.3353.0 | 295 |
| 8213 BL / 3 W | 25.343.0353.0 | 295 |
| 8213 BL / 3 W OB | 25.343.3353.0 | 295 |
| 8213 BL / 4 G | 25.342.0453.0 | 295 |
| 8213 BL / 4 G OB | 25.342.3453.0 | 295 |
| 8213 BL / 4 W | 25.343.0453.0 | 295 |
| 8213 BL / 4 W OB | 25.343.3453.0 | 295 |
| 8213 BL / 5 G | 25.342.0553.0 | 295 |
| 8213 BL / 5 G OB | 25.342.3553.0 | 295 |
| 8213 BL / 5 W | 25.343.0553.0 | 295 |
| 8213 BL / 5 W OB | 25.343.3553.0 | 295 |
| 8213 BL / 6 G | 25.342.0653.0 | 295 |
| 8213 BL / 6 G OB | 25.342.3653.0 | 295 |
| 8213 BL / 6 W | 25.343.0653.0 | 295 |
| 8213 BL / 6 W OB | 25.343.3653.0 | 295 |
| 8213 BL / 7 G | 25.342.0753.0 | 295 |
| 8213 BL / 7 G OB | 25.342.3753.0 | 295 |
| 8213 BL / 7 W | 25.343.0753.0 | 295 |
| 8213 BL / 7 W OB | 25.343.3753.0 | 295 |
| 8213 BL / 8 G | 25.342.0853.0 | 295 |
| 8213 BL / 8 G OB | 25.342.3853.0 | 295 |
| 8213 BL / 8 W | 25.343.0853.0 | 295 |
| 8213 BL / 8 W OB | 25.343.3853.0 | 295 |
| 8213 BL / 9 G | 25.342.0953.0 | 295 |
| 8213 BL / 9 W | 25.343.0953.0 | 295 |
| 8213 BL / 9W OB | 25.343.3953.0 | 295 |
| 8213 BL / 10 G | 25.342.1053.0 | 295 |
| 8213 BL / 10 G OB | 25.342.4053.0 | 295 |
| 8213 BL / 10 W | 25.343.1053.0 | 295 |
| 8213 BL / 10 W OB | 25.343.4053.0 | 295 |
| 8213 BL / 11 G | 25.342.1153.0 | 295 |
| 8213 BL / 11 G OB | 25.342.4153.0 | 295 |
| 8213 BL / 11 W | 25.343.1153.0 | 295 |
| 8213 BL / 11 W OB | 25.343.4153.0 | 295 |
| 8213 BL / 12 G | 25.342.1253.0 | 295 |
| 8213 BL / 12 G OB | 25.342.4253.0 | 295 |
| 8213 BL / 12 W | 25.343.1253.0 | 295 |
| 8213 BL / 12 W OB | 25.343.4253.0 | 295 |
| 8213 BL / 13 G | 25.342.1353.0 | 295 |
| 8213 BL / 13 G OB | 25.342.4353.0 | 295 |
| 8213 BL / 13 W | 25.343.1353.0 | 295 |
| 8213 BL / 13 W OB | 25.343.4353.0 | 295 |
| 8213 BL / 14 G | 25.342.1453.0 | 295 |
| 8213 BL / 14 G OB | 25.342.4453.0 | 295 |
| 8213 BL / 14 W | 25.343.1453.0 | 295 |
| 8213 BL / 14 W OB | 25.343.4453.0 | 295 |
| 8213 BL / 15 G | 25.342.1553.0 | 295 |
| 8213 BL / 15 G OB | 25.342.4553.0 | 295 |
| 8213 BL / 15 W | 25.343.1553.0 | 295 |
| 8213 BL / 15 W OB | 25.343.4553.0 | 295 |
| 8213 BL / 16 G | 25.342.1653.0 | 295 |
| 8213 BL / 16 G OB | 25.342.4653.0 | 295 |
| 8213 BL / 16 W | 25.343.1653.0 | 295 |
| 8213 BL / 16 W OB | 25.343.4653.0 | 295 |
| 8213 S 2 DFWW | 25.303.0253.0 | 305 |
| 8213 S / 2 DFLS | 25.303.3253.0 | 305 |
| 8213 S / 2 DFLS M | 25.313.3253.0 | 305 |
| 8213 S / 2 DFWW M | 25.313.0253.0 | 305 |
| 8213 S / 2 G OB | 25.350.3253.0 | 297 |
| 8213 S / 2 G OB GR OF | 99.232.9996.1 | 297 |
| 8213 S / 2 GF OB | 25.359.3253.0 | 298 |
| 8213 S / 2 S OB GR | 25.396.3253.0 | 302 |
| 8213 S / 2 S1 OB GR | 25.397.3253.0 | 302 |
| 8213 S / 2 W OB | 25.352.3253.0 | 298 |
| 8213 S / 2 W OB GR OF | 99.202.9996.2 | 299 |
| 8213 S / 2 WF OB | 25.358.3253.0 | 299 |
| 8213 S / 3 DFLS | 25.303.3353.0 | 305 |
| 8213 S / 3 DFLS M | 25.313.3353.0 | 305 |
| 8213 S / 3 DFWW | 25.303.0353.0 | 305 |
| 8213 S / 3 DFWW M | 25.313.0353.0 | 305 |
| 8213 S / 3 G OB | 25.350.3353.0 | 297 |
| 8213 S / 3 G OB GR OF | 99.233.9996.1 | 297 |
| 8213 S / 3 GF OB | 25.359.3353.0 | 298 |
| 8213 S / 3 S OB GR | 25.396.3353.0 | 302 |
| 8213 S / 3 S1 OB GR | 25.397.3353.0 | 302 |
| 8213 S / 3 W OB | 25.352.3353.0 | 298 |
| 8213 S / 3 W OB GR OF | 99.203.9996.2 | 299 |
| 8213 S / 3 WF OB | 25.358.3353.0 | 299 |
| 8213 S / 4 DFLS | 25.303.3453.0 | 305 |
| 8213 S / 4 DFLS M | 25.313.3453.0 | 305 |
| 8213 S / 4 DFWW | 25.303.0453.0 | 305 |
| 8213 S / 4 DFWW M | 25.313.0453.0 | 305 |
| 8213 S / 4 G OB | 25.350.3453.0 | 297 |
| 8213 S / 4 G OB GR OF | 99.234.9996.1 | 297 |
| 8213 S / 4 GF OB | 25.359.3453.0 | 298 |
| 8213 S / 4 S OB GR | 25.396.3453.0 | 302 |
| 8213 S / 4 S1 OB GR | 25.397.3453.0 | 302 |
| 8213 S / 4 W OB | 25.352.3453.0 | 298 |
| 8213 S / 4 W OB GR OF | 99.204.9996.2 | 299 |
| 8213 S / 4 WF OB | 25.358.3453.0 | 299 |
| 8213 S / 5 DFLS | 25.303.3553.0 | 305 |
| 8213 S / 5 DFLS M | 25.313.3553.0 | 305 |
| 8213 S / 5 DFWW | 25.303.0553.0 | 305 |
| 8213 S / 5 DFWW M | 25.313.0553.0 | 305 |
| 8213 S / 5 G OB | 25.350.3553.0 | 297 |
| 8213 S / 5 G OB GR OF | 99.235.9996.1 | 297 |
| 8213 S / 5 GF OB | 25.359.3553.0 | 298 |
| 8213 S / 5 S OB GR | 25.396.3553.0 | 302 |
| 8213 S / 5 S1 OB GR | 25.397.3553.0 | 302 |
| 8213 S / 5 W OB | 25.352.3553.0 | 298 |
| 8213 S / 5 W OB GR OF | 99.205.9996.2 | 299 |
| 8213 S / 5 WF OB | 25.358.3553.0 | 299 |
| 8213 S / 6 DFLS | 25.303.3653.0 | 305 |
| 8213 S / 6 DFLS M | 25.313.3653.0 | 305 |
| 8213 S / 6 DFWW | 25.303.0653.0 | 305 |
| 8213 S / 6 DFWW M | 25.313.0653.0 | 305 |
| 8213 S / 6 G OB | 25.350.3653.0 | 297 |
| 8213 S / 6 G OB GR OF | 99.236.9996.1 | 297 |
| 8213 S / 6 GF OB | 25.359.3653.0 | 298 |
| 8213 S / 6 S OB GR | 25.396.3653.0 | 302 |
| 8213 S / 6 S1 OB GR | 25.397.3653.0 | 302 |
| 8213 S / 6 W OB | 25.352.3653.0 | 298 |
| 8213 S / 6 W OB GR OF | 99.206.9996.2 | 299 |
| 8213 S / 6 WF OB | 25.358.3653.0 | 299 |
| 8213 S / 7 DFLS | 25.303.3753.0 | 305 |
| 8213 S / 7 DFLS M | 25.313.3753.0 | 305 |
| 8213 S / 7 DFWW | 25.303.0753.0 | 305 |
| 8213 S / 7 DFWW M | 25.313.0753.0 | 305 |
| 8213 S / 7 G OB | 25.350.3753.0 | 297 |
| 8213 S / 7 G OB GR OF | 99.237.9996.1 | 297 |
| 8213 S / 7 GF OB | 25.359.3753.0 | 298 |
| 8213 S / 7 S OB GR | 25.396.3753.0 | 302 |
| 8213 S / 7 S1 OB GR | 25.397.3753.0 | 302 |
| 8213 S / 7 W OB | 25.352.3753.0 | 298 |
| 8213 S / 7 W OB GR OF | 99.207.9996.2 | 299 |
| 8213 S / 7 WF OB | 25.358.3753.0 | 299 |
| 8213 S / 8 DFLS | 25.303.3853.0 | 305 |
| 8213 S / 8 DFLS M | 25.313.3853.0 | 305 |
| 8213 S / 8 DFWW | 25.303.0853.0 | 305 |
| 8213 S / 8 DFWW M | 25.313.0853.0 | 305 |
| 8213 S / 8 G OB | 25.350.3853.0 | 297 |
| 8213 S / 8 G OB GR OF | 99.238.9996.1 | 297 |
| 8213 S / 8 GF OB | 25.359.3853.0 | 298 |
| 8213 S / 8 S OB GR | 25.396.3853.0 | 302 |
| 8213 S / 8 S1 OB GR | 25.397.3853.0 | 302 |
| 8213 S / 8 W OB | 25.352.3853.0 | 298 |
| 8213 S / 8 W OB GR OF | 99.208.9996.2 | 299 |
| 8213 S / 8 WF OB | 25.358.3853.0 | 299 |
| 8213 S / 9 DFLS | 25.303.3953.0 | 305 |
| 8213 S / 9 DFLS M | 25.313.3953.0 | 305 |
| 8213 S / 9 DFWW | 25.303.0953.0 | 305 |
| 8213 S / 9 DFWW M | 25.313.0953.0 | 305 |
| 8213 S / 9 G OB | 25.350.3953.0 | 297 |
| 8213 S / 9 GF OB | 25.359.3953.0 | 298 |
| 8213 S / 9 S OB GR | 25.396.3953.0 | 302 |
| 8213 S / 9 S1 OB GR | 25.397.3953.0 | 302 |
| 8213 S / 9 W OB | 25.352.3953.0 | 298 |
| 8213 S / 9 W OB GR OF | 99.209.9996.2 | 299 |
| 8213 S / 9 WF OB | 25.358.3953.0 | 299 |
| 8213 S / 10 DFLS | 25.303.4053.0 | 305 |
| 8213 S / 10 DFLS M | 25.313.4053.0 | 305 |
| 8213 S / 10 DFWW | 25.303.1053.0 | 305 |
| 8213 S / 10 DFWW M | 25.313.1053.0 | 305 |
| 8213 S / 10 G OB | 25.350.4053.0 | 297 |
| 8213 S / 10 G OB GR OF | 99.240.9996.1 | 297 |
| 8213 S / 10 GF OB | 25.359.4053.0 | 298 |
| 8213 S / 10 S OB GR | 25.396.4053.0 | 302 |
| 8213 S / 10 S1 OB GR | 25.397.4053.0 | 302 |
| 8213 S / 10 W OB | 25.352.4053.0 | 298 |
| 8213 S / 10 W OB GR OF | 99.210.9996.2 | 299 |
| 8213 S / 10 WF OB | 25.358.4053.0 | 299 |
| 8213 S / 11 DFLS | 25.303.4153.0 | 305 |
| 8213 S / 11 DFLS M | 25.313.4153.0 | 305 |
| 8213 S / 11 DFWW | 25.303.1153.0 | 305 |
| 8213 S / 11 DFWW M | 25.313.1153.0 | 305 |
| 8213 S / 11 G OB | 25.350.4153.0 | 297 |
| 8213 S / 11 G OB GR OF | 99.241.9996.1 | 297 |
| 8213 S / 11 GF OB | 25.359.4153.0 | 298 |
| 8213 S / 11 S OB GR | 25.396.4153.0 | 302 |
| 8213 S / 11 S1 OB GR | 25.397.4153.0 | 302 |
| 8213 S / 11 W OB | 25.352.4153.0 | 298 |
| 8213 S / 11 W OB GR OF | 99.211.9996.2 | 299 |
| 8213 S / 11 WF OB | 25.358.4153.0 | 299 |
| 8213 S / 12 DFLS | 25.303.4253.0 | 305 |
| 8213 S / 12 DFLS M | 25.313.4253.0 | 305 |
| 8213 S / 12 DFWW | 25.303.1253.0 | 305 |
| 8213 S / 12 DFWW M | 25.313.1253.0 | 305 |
| 8213 S / 12 G OB | 25.350.4253.0 | 297 |
| 8213 S / 12 G OB GR OF | 99.242.9996.1 | 297 |
| 8213 S / 12 GF OB | 25.359.4253.0 | 298 |
| 8213 S / 12 S OB GR | 25.396.4253.0 | 302 |
| 8213 S / 12 S1 OB GR | 25.397.4253.0 | 302 |
| 8213 S / 12 W OB | 25.352.4253.0 | 298 |
| 8213 S / 12 W OB GR OF | 99.212.9996.2 | 299 |
| 8213 S / 12 WF OB | 25.358.4253.0 | 299 |
| 8213 S / 13 DFLS | 25.303.4353.0 | 305 |
| 8213 S / 13 DFLS M | 25.313.4353.0 | 305 |
| 8213 S / 13 DFWW | 25.303.1353.0 | 305 |
| 8213 S / 13 DFWW M | 25.313.1353.0 | 305 |
| 8213 S / 13 G OB | 25.350.4353.0 | 297 |
| 8213 S / 13 G OB GR OF | 99.243.9996.1 | 297 |
| 8213 S / 13 GF OB | 25.359.4353.0 | 298 |
| 8213 S / 13 S OB GR | 25.396.4353.0 | 302 |
| 8213 S / 13 S1 OB GR | 25.397.4353.0 | 302 |
| 8213 S / 13 W OB | 25.352.4353.0 | 298 |
| 8213 S / 13 W OB GR OF | 99.213.9996.2 | 299 |
| 8213 S / 13 WF OB | 25.358.4353.0 | 299 |
| 8213 S / 14 DFLS | 25.303.4453.0 | 305 |
| 8213 S / 14 DFLS M | 25.313.4453.0 | 305 |
| 8213 s / 14 DFWW | 25.303.1453.0 | 305 |
| 8213 S / 14 DFWW M | 25.313.1453.0 | 305 |
| 8213 S / 14 G OB | 25.350.4453.0 | 297 |
| 8213 S / 14 G OB GR OF | 99.244.9996.1 | 297 |
| 8213 S / 14 GF OB | 25.359.4453.0 | 298 |
| 8213 S / 14 S OB GR | 25.396.4453.0 | 302 |
| 8213 S / 14 S1 OB GR | 25.397.4453.0 | 302 |
| 8213 S / 14 W OB | 25.352.4453.0 | 298 |
| 8213 S / 14 W OB GR OF | 99.214.9996.2 | 299 |
| 8213 S / 14 WF OB | 25.358.4453.0 | 299 |
| 8213 S / 15 DFLS | 25.303.4553.0 | 305 |
| 8213 S / 15 DFLS M | 25.313.4553.0 | 305 |
| 8213 S / 15 DFWW | 25.303.1553.0 | 305 |
| 8213 S / 15 DFWW M | 25.313.1553.0 | 305 |
| 8213 S / 15 G OB | 25.350.4553.0 | 297 |
| 8213 S / 15 G OB GR OF | 99.245.9996.1 | 297 |
| 8213 S / 15 GF OB | 25.359.4553.0 | 298 |
| 8213 S / 15 S OB GR | 25.396.4553.0 | 302 |
| 8213 S / 15 S1 OB GR | 25.397.4553.0 | 302 |
| 8213 S / 15 W OB | 25.352.4553.0 | 298 |
| 8213 S / 15 W OB GR OF | 99.215.9996.2 | 299 |
| 8213 S / 15 WF OB | 25.358.4553.0 | 299 |
| 8213 S / 16 DFLS | 25.303.4653.0 | 305 |
| 8213 S / 16 DFLS M | 25.313.4653.0 | 305 |
| 8213 S / 16 DFWW | 25.303.1653.0 | 305 |
| 8213 S / 16 DFWW M | 25.313.1653.0 | 305 |
| 8213 S / 16 G OB | 25.350.4653.0 | 297 |
| 8213 S / 16 G OB GR OF | 99.246.9996.1 | 297 |
| 8213 S / 16 GF OB | 25.359.4653.0 | 298 |
| 8213 S / 16 S OB GR | 25.396.4653.0 | 302 |
| 8213 S / 16 S1 OB GR | 25.397.4653.0 | 302 |
| 8213 S / 16 W OB | 25.352.4653.0 | 298 |
| 8213 S / 16 W OB GR OF | 99.216.9996.2 | 299 |
| 8213 S / 16 WF OB | 25.358.4653.0 | 299 |
| 8213 S / 9 G OB GR OF | 99.239.9996.1 | 297 |
| 8213 S E / 2 G OB | 25.354.3253.0 | 303 |
| 8213 S E / 2 W OB | 25.356.3253.0 | 303 |
| 8213 S E / 3 G OB | 25.354.3353.0 | 303 |
| 8213 S E / 3 W OB | 25.356.3353.0 | 303 |
| 8213 SEG/ 5/10 G OB | 27.354.0553.0 | 304 |
| 8213 SEG/ 5/10 W OB | 27.356.0553.0 | 304 |
| 8213 SEG/10/20 G OB | 27.354.1053.0 | 304 |
| 8213 SEG/10/20 W OB | 27.356.1053.0 | 304 |
| 8213 SUFK/ 2 TOP | 25.857.0253.0 | 293 |
| 8213 SUFK/ 2 TOP OB | 25.857.3253.0 | 293 |
| 8213 SUFK/ 3 TOP | 25.857.0353.0 | 293 |
| 8213 SUFK/ 3 TOP OB | 25.857.3353.0 | 293 |
| 8213 SUFK/ 4 TOP | 25.857.0453.0 | 293 |
| 8213 SUFK/ 4 TOP OB | 25.857.3453.0 | 293 |
| 8213 SUFK/ 5 TOP | 25.857.0553.0 | 293 |
| 8213 SUFK/ 5 TOP OB | 25.857.3553.0 | 293 |
| 8213 SUFK/ 6 TOP | 25.857.0653.0 | 293 |
| 8213 SUFK/ 6 TOP OB | 25.857.3653.0 | 293 |
| 8213 SUFK/ 7 TOP | 25.857.0753.0 | 293 |
| 8213 SUFK/ 7 TOP OB | 25.857.3753.0 | 293 |
| 8213 SUFK/ 8 TOP | 25.857.0853.0 | 293 |
| 8213 SUFK/ 8 TOP OB | 25.857.3853.0 | 293 |
| 8213 SUFK/ 9 TOP | 25.857.0953.0 | 293 |
| 8213 SUFK/ 9 TOP OB | 25.857.3953.0 | 293 |
| 8213 SUFK/10 TOP | 25.857.1053.0 | 293 |
| 8213 SUFK/10 TOP OB | 25.857.4053.0 | 293 |
| 8213 SUFK/11 TOP | 25.857.1153.0 | 293 |
| 8213 SUFK/11 TOP OB | 25.857.4153.0 | 293 |
| 8213 SUFK/12 TOP | 25.857.1253.0 | 293 |
| 8213 SUFK/12 TOP OB | 25.857.4253.0 | 293 |
| 8213 SUFK/13 TOP | 25.857.1353.0 | 293 |
| 8213 SUFK/13 TOP OB | 25.857.4353.0 | 293 |
| 8213 SUFK/14 TOP | 25.857.1453.0 | 293 |
| 8213 SUFK/14 TOP OB | 25.857.4453.0 | 293 |
| 8213 SUFK/15 TOP | 25.857.1553.0 | 293 |
| 8213 SUFK/15 TOP OB | 25.857.4553.0 | 293 |
| 8213 SUFK/16 TOP | 25.857.1653.0 | 293 |
| 8213 SUFK/16 TOP OB | 25.857.4653.0 | 293 |
| 8213BL / 9 G OB | 25.342.3953.0 | 295 |
| 8234 / 11 | 25.502.1153.0 | 360 |
| 8234 / 13 | 25.502.1353.0 | 360 |
| 8234 / 15 | 25.502.1553.0 | 360 |
| 8234 / 16 | 25.502.1653.0 | 360 |
| 8234 / 2 | 25.502.0253.0 | 360 |
| 8234 / 2 OB | 25.503.0253.0 | 360 |
| 8234 / 2 ZN | 25.502.6253.0 | 360 |
| 8234 / 2 ZN OB | 25.503.6253.0 | 360 |
| 8234 / 3 | 25.502.0353.0 | 360 |
| 8234 / 3 OB | 25.503.0353.0 | 360 |
| 8234 / 3 ZN | 25.502.6353.0 | 360 |

# contents of type description

# contents TYPE


| Type | Part no. | section / page |
|---|---|---|
| 8234 / 3 ZN OB | 25.503.6353.0 | 360 |
| 8234 / 4 | 25.502.0453.0 | 360 |
| 8234 / 4 OB | 25.503.0453.0 | 360 |
| 8234 / 5 | 25.502.0553.0 | 360 |
| 8234 / 5 OB | 25.503.0553.0 | 360 |
| 8234 / 6 | 25.502.0653.0 | 360 |
| 8234 / 6 OB | 25.503.0653.0 | 360 |
| 8234 / 7 | 25.502.0753.0 | 360 |
| 8234 / 7 OB | 25.503.0753.0 | 360 |
| 8234 / 8 | 25.502.0853.0 | 360 |
| 8234 / 8 OB | 25.503.0853.0 | 360 |
| 8234 / 9 | 25.502.0953.0 | 360 |
| 8234 / 9 OB | 25.503.0953.0 | 360 |
| 8234 / 10 | 25.502.1053.0 | 360 |
| 8234 / 10 OB | 25.503.1053.0 | 360 |
| 8234 / 11 OB | 25.503.1153.0 | 360 |
| 8234 / 12 | 25.502.1253.0 | 360 |
| 8234 / 12 OB | 25.503.1253.0 | 360 |
| 8234 / 13 OB | 25.503.1353.0 | 360 |
| 8234 / 14 | 25.502.1453.0 | 360 |
| 8234 / 14 OB | 25.503.1453.0 | 360 |
| 8234 / 15 OB | 25.503.1553.0 | 360 |
| 8234 / 16 OB | 25.503.1653.0 | 360 |
| 8235 / 2 | 25.522.0253.0 | 362 |
| 8235 / 2 OB | 25.523.0253.0 | 362 |
| 8235 / 2 ZN | 25.522.6253.0 | 362 |
| 8235 / 2 ZN OB | 25.523.6253.0 | 362 |
| 8235 / 3 | 25.522.0353.0 | 362 |
| 8235 / 3 OB | 25.523.0353.0 | 362 |
| 8235 / 3 ZN | 25.522.6353.0 | 362 |
| 8235 / 3 ZN OB | 25.523.6353.0 | 362 |
| 8235 / 4 | 25.522.0453.0 | 362 |
| 8235 / 4 OB | 25.523.0453.0 | 362 |
| 8235 / 5 | 25.522.0553.0 | 362 |
| 8235 / 5 OB | 25.523.0553.0 | 362 |
| 8235 / 6 | 25.522.0653.0 | 362 |
| 8235 / 6 OB | 25.523.0653.0 | 362 |
| 8235 / 7 | 25.522.0753.0 | 362 |
| 8235 / 7 OB | 25.523.0753.0 | 362 |
| 8235 / 8 | 25.522.0853.0 | 362 |
| 8235 / 8 OB | 25.523.0853.0 | 362 |
| 8235 / 9 | 25.522.0953.0 | 362 |
| 8235 / 9 OB | 25.523.0953.0 | 362 |
| 8235 / 10 | 25.522.1053.0 | 362 |
| 8235 / 10 OB | 25.523.1053.0 | 362 |
| 8235 / 11 | 25.522.1153.0 | 362 |
| 8235 / 11 OB | 25.523.1153.0 | 362 |
| 8235 / 12 | 25.522.1253.0 | 362 |
| 8235 / 12 OB | 25.523.1253.0 | 362 |
| 8235 / 13 | 25.522.1353.0 | 362 |
| 8235 / 13 OB | 25.523.1353.0 | 362 |
| 8235 / 14 | 25.522.1453.0 | 362 |
| 8235 / 14 OB | 25.523.1453.0 | 362 |
| 8235 / 15 | 25.522.1553.0 | 362 |
| 8235 / 15 OB | 25.523.1553.0 | 362 |
| 8235 / 16 | 25.522.1653.0 | 362 |
| 8235 / 16 OB | 25.523.1653.0 | 362 |
| 8258 / 2 TOP H OB | 25.791.0253.0 | 353 |
| 8258 / 2 TOP V OB | 25.781.0253.0 | 353 |
| 8258 / 3 TOP H OB | 25.791.0353.0 | 353 |
| 8258 / 3 TOP V OB | 25.781.0353.0 | 353 |
| 8258 / 4 TOP H OB | 25.791.0453.0 | 353 |
| 8258 / 4 TOP V OB | 25.781.0453.0 | 353 |
| 8258 / 5 TOP H OB | 25.791.0553.0 | 353 |
| 8258 / 6 TOP H OB | 25.791.0653.0 | 353 |
| 8258 / 7 TOP H OB | 25.791.0753.0 | 353 |
| 8258 / 7 TOP V OB | 25.781.0753.0 | 353 |
| 8258 / 8 TOP H OB | 25.791.0853.0 | 353 |
| 8258 / 8 TOP V OB | 25.781.0853.0 | 353 |
| 8258 / 9 TOP H OB | 25.791.0953.0 | 353 |
| 8258 / 9 TOP V OB | 25.781.0953.0 | 353 |
| 8258 / 10 TOP H OB | 25.791.1053.0 | 353 |
| 8258 / 10 TOP V OB | 25.781.1053.0 | 353 |
| 8258 / 11 TOP H OB | 25.791.1153.0 | 353 |
| 8258 / 11 TOP V OB | 25.781.1153.0 | 353 |
| 8258 / 12 TOP H OB | 25.791.1253.0 | 353 |
| 8258 / 12 TOP V OB | 25.781.1253.0 | 353 |
| 8258 / 13 TOP H OB | 25.791.1353.0 | 353 |
| 8258 / 13 TOP V OB | 25.781.1353.0 | 353 |
| 8258 / 14 TOP H OB | 25.791.1453.0 | 353 |
| 8258 / 14 TOP V OB | 25.781.1453.0 | 353 |
| 8258 / 15 TOP H OB | 25.791.1553.0 | 353 |
| 8258 / 15 TOP V OB | 25.781.1553.0 | 353 |
| 8258 / 16 TOP H OB | 25.791.1653.0 | 353 |
| 8258 / 16 TOP V OB | 25.781.1653.0 | 353 |
| 8258 / 5 TOP V OB | 25.781.0553.0 | 353 |
| 8258 / 6 TOP V OB | 25.781.0653.0 | 353 |
| 8276 | 25.720.1353.0 | 378 |
| 8276 TKS | 25.720.1453.0 | 378 |
| 8285 TOP H | 25.751.3753.0 | 350 |
| 8285 TOP H | 25.751.3853.0 | 350 |
| 8285 TOP H | 25.751.3953.0 | 350 |
| 8285 TOP H | 25.751.4153.0 | 350 |
| 8285 TOP H | 25.751.4253.0 | 350 |
| 8285 TOP H | 25.751.4353.0 | 350 |
| 8285 TOP H | 25.751.4453.0 | 350 |
| 8285 TOP H | 25.751.4553.0 | 350 |
| 8285 TOP V | 25.751.0753.0 | 349 |
| 8285 TOP V | 25.751.0953.0 | 349 |
| 8285 TOP V | 25.751.1153.0 | 349 |
| 8285 TOP V | 25.751.1353.0 | 349 |
| 8285 TOP V | 25.751.1453.0 | 349 |
| 8285 TOP V | 25.751.1653.0 | 349 |
| 8285/ 1 TOP H | 25.751.0153.0 | 350 |
| 8285/ 1 TOP V | 25.751.0053.0 | 349 |
| 8285/ 2 TOP H | 25.751.3253.0 | 350 |
| 8285/ 2 TOP V | 25.751.0253.0 | 349 |
| 8285/ 3 TOP H | 25.751.3353.0 | 350 |
| 8285/ 3 TOP V | 25.751.0353.0 | 349 |
| 8285/ 4 TOP H | 25.751.3453.0 | 350 |
| 8285/ 4 TOP V | 25.751.0453.0 | 349 |
| 8285/ 5 TOP H | 25.751.3553.0 | 350 |
| 8285/ 5 TOP V | 25.751.0553.0 | 349 |
| 8285/ 6 TOP H | 25.751.3653.0 | 350 |
| 8285/ 6 TOP V | 25.751.0653.0 | 349 |
| 8285/ 8 TOP V | 25.751.0853.0 | 349 |
| 8285/ 10 TOP H | 25.751.4053.0 | 350 |
| 8285/ 10 TOP V | 25.751.1053.0 | 349 |
| 8285/ 12 TOP V | 25.751.1253.0 | 349 |
| 8285/ 15 TOP V | 25.751.1553.0 | 349 |
| 8285/ 16 TOP H | 25.751.4653.0 | 350 |
| 8291 / 2 | 25.162.0253.0 | 344 |
| 8291 / 2 OB | 25.163.0253.0 | 344 |
| 8291 / 2 ZN | 25.172.0253.0 | 344 |
| 8291 / 2 ZN OB | 25.173.0253.0 | 344 |
| 8291 / 2 ZW | 25.162.6253.0 | 345 |
| 8291 / 2 ZW OB | 25.163.6253.0 | 345 |
| 8291 / 3 | 25.162.0353.0 | 344 |
| 8291 / 3 OB | 25.163.0353.0 | 344 |
| 8291 / 3 ZN | 25.172.0353.0 | 344 |
| 8291 / 3 ZN OB | 25.173.0353.0 | 344 |
| 8291 / 3 ZW | 25.162.6353.0 | 345 |
| 8291 / 3 ZW OB | 25.163.6353.0 | 345 |
| 8291 / 4 | 25.162.0453.0 | 344 |
| 8291 / 4 OB | 25.163.0453.0 | 344 |
| 8291 / 4 ZW | 25.162.6453.0 | 345 |
| 8291 / 4 ZW OB | 25.163.6453.0 | 345 |
| 8291 / 5 | 25.162.0553.0 | 344 |
| 8291 / 5 OB | 25.163.0553.0 | 344 |
| 8291 / 5 ZW | 25.162.6553.0 | 345 |
| 8291 / 5 ZW OB | 25.163.6553.0 | 345 |
| 8291 / 6 | 25.162.0653.0 | 344 |
| 8291 / 6 OB | 25.163.0653.0 | 344 |
| 8291 / 6 ZW | 25.162.6653.0 | 345 |
| 8291 / 6 ZW OB | 25.163.6653.0 | 345 |
| 8291 / 7 | 25.162.0753.0 | 344 |
| 8291 / 7 OB | 25.163.0753.0 | 344 |
| 8291 / 7 ZW | 25.162.6753.0 | 345 |
| 8291 / 7 ZW OB | 25.163.6753.0 | 345 |
| 8291 / 8 | 25.162.0853.0 | 344 |
| 8291 / 8 OB | 25.163.0853.0 | 344 |
| 8291 / 8 ZW | 25.162.6853.0 | 345 |
| 8291 / 8 ZW OB | 25.163.6853.0 | 345 |
| 8291 / 9 | 25.162.0953.0 | 344 |
| 8291 / 9 OB | 25.163.0953.0 | 344 |
| 8291 / 9 ZW | 25.162.6953.0 | 345 |
| 8291 / 9 ZW OB | 25.163.6953.0 | 345 |
| 8291 / 10 | 25.162.1053.0 | 344 |
| 8291 / 10 OB | 25.163.1053.0 | 344 |
| 8291 / 10 ZW | 25.162.7053.0 | 345 |
| 8291 / 10 ZW OB | 25.163.7053.0 | 345 |
| 8291 / 11 | 25.162.1153.0 | 344 |
| 8291 / 11 OB | 25.163.1153.0 | 344 |
| 8291 / 11 ZW | 25.162.7153.0 | 345 |
| 8291 / 11 ZW OB | 25.163.7153.0 | 345 |
| 8291 / 12 | 25.162.1253.0 | 344 |
| 8291 / 12 OB | 25.163.1253.0 | 344 |
| 8291 / 12 ZW | 25.162.7253.0 | 345 |
| 8291 / 12 ZW OB | 25.163.7253.0 | 345 |
| 8291 / 13 | 25.162.1353.0 | 344 |
| 8291 / 13 OB | 25.163.1353.0 | 344 |
| 8291 / 13 ZW OB | 25.163.7353.0 | 345 |
| 8291 / 14 | 25.162.1453.0 | 344 |
| 8291 / 14 OB | 25.163.1453.0 | 344 |
| 8291 / 14 ZW | 25.162.7453.0 | 345 |
| 8291 / 14 ZW OB | 25.163.7453.0 | 345 |
| 8291 / 15 | 25.162.1553.0 | 344 |
| 8291 / 15 OB | 25.163.1553.0 | 344 |
| 8291 / 15 ZW | 25.162.7553.0 | 345 |
| 8291 / 15 ZW OB | 25.163.7553.0 | 345 |
| 8291 / 16 | 25.162.1653.0 | 344 |
| 8291 / 16 OB | 25.163.1653.0 | 344 |
| 8291 / 16 ZW | 25.162.7653.0 | 345 |
| 8291 / 16 ZW OB | 25.163.7653.0 | 345 |
| 8291 D / 2 / 6 | 25.181.0253.0 | 370 |
| 8291 D / 2 / 6 OB | 25.181.5253.0 | 370 |
| 8291 D / 2 / 6 ZN | 25.181.4253.0 | 370 |
| 8291 D / 2 / 6 ZN OB | 25.181.9253.0 | 370 |
| 8291 D / 3 / 9 | 25.181.0353.0 | 370 |
| 8291 D / 3 / 9 OB | 25.181.5353.0 | 370 |
| 8291 D / 3 / 9 ZN | 25.181.4353.0 | 370 |
| 8291 D / 3 / 9 ZN OB | 25.181.9353.0 | 370 |
| 8291 D / 4 / 12 | 25.181.0453.0 | 370 |
| 8291 D / 4 / 12 OB | 25.181.5453.0 | 370 |
| 8291 D / 5 / 15 | 25.181.0553.0 | 370 |
| 8291 D / 5 / 15 OB | 25.181.5553.0 | 370 |
| 8291 D / 6 / 18 | 25.181.0653.0 | 370 |
| 8291 D / 6 / 18 OB | 25.181.5653.0 | 370 |
| 8291 D / 7 / 21 | 25.181.0753.0 | 370 |
| 8291 D / 7 / 21 OB | 25.181.5753.0 | 370 |
| 8291 D / 8 / 24 | 25.181.0853.0 | 370 |
| 8291 D / 8 / 24 OB | 25.181.5853.0 | 370 |
| 8291 D / 9 / 27 | 25.181.0953.0 | 370 |
| 8291 D / 9 / 27 OB | 25.181.5953.0 | 370 |
| 8291 D / 10 / 30 | 25.181.1053.0 | 370 |
| 8291 D / 10 / 30 OB | 25.181.6053.0 | 370 |
| 8291 D / 11 / 33 | 25.181.1153.0 | 370 |
| 8291 D / 11 / 33 OB | 25.181.6153.0 | 370 |
| 8291 D / 12 / 36 | 25.181.1253.0 | 370 |
| 8291 D / 12 / 36 OB | 25.181.6253.0 | 370 |
| 8291 E / 2 / 4 | 25.179.0253.0 | 366 |
| 8291 E / 2 / 4 OB | 25.179.5253.0 | 366 |
| 8291 E / 2 / 4 ZN | 25.179.4253.0 | 366 |
| 8291 E / 2 / 4 ZN OB | 25.179.9253.0 | 366 |
| 8291 E / 3 / 6 | 25.179.0353.0 | 366 |
| 8291 E / 3 / 6 OB | 25.179.5353.0 | 366 |
| 8291 E / 3 / 6 ZN | 25.179.4353.0 | 366 |
| 8291 E / 3 / 6 ZN OB | 25.179.9353.0 | 366 |
| 8291 E / 4 / 8 | 25.179.0453.0 | 366 |
| 8291 E / 4 / 8 OB | 25.179.5453.0 | 366 |
| 8291 E / 5 / 10 | 25.179.0553.0 | 366 |
| 8291 E / 5 / 10 OB | 25.179.5553.0 | 366 |
| 8291 E / 6 / 12 | 25.179.0653.0 | 366 |
| 8291 E / 6 / 12 OB | 25.179.5653.0 | 366 |
| 8291 E / 7 / 12 | 25.179.0753.0 | 366 |
| 8291 E / 7 / 14 OB | 25.179.5753.0 | 366 |
| 8291 E / 8 / 16 | 25.179.0853.0 | 366 |
| 8291 E / 9 / 18 | 25.179.0953.0 | 366 |
| 8291 E / 10 / 20 | 25.179.1053.0 | 366 |
| 8291 E / 10 / 20 OB | 25.179.6053.0 | 366 |
| 8291 E / 11 / 22 | 25.179.1153.0 | 366 |
| 8291 E / 11 / 22 OB | 25.179.6153.0 | 366 |
| 8291 E / 12 / 24 | 25.179.1253.0 | 366 |
| 8291 E / 12 / 24 OB | 25.179.6253.0 | 366 |
| 8291 E/ 8 / 16 OB | 25.179.5853.0 | 366 |
| 8291 E/ 9 / 18 OB | 25.179.5953.0 | 366 |
| 8291 R / 2 Z | 25.156.2253.0 | 342 |
| 8291 R / 2 Z OB | 25.156.0253.0 | 342 |
| 8291 R / 3 Z | 25.156.2353.0 | 342 |
| 8291 R / 3 Z OB | 25.156.0353.0 | 342 |
| 8291 R / 3/ 2 Z | 25.157.5253.0 | 343 |
| 8291 R / 3/ 2 Z OB | 25.157.4253.0 | 343 |
| 8291 R / 4 Z | 25.156.2453.0 | 342 |
| 8291 R / 5 Z | 25.156.2553.0 | 342 |
| 8291 R / 5 Z OB | 25.156.0553.0 | 342 |
| 8291 R / 5/ 3 Z | 25.157.5353.0 | 343 |
| 8291 R / 5/ 3 Z OB | 25.157.4353.0 | 343 |
| 8291 R / 6 Z | 25.156.2653.0 | 342 |
| 8291 R / 6 Z OB | 25.156.0653.0 | 342 |
| 8291 R / 7 Z | 25.156.2753.0 | 342 |
| 8291 R / 7 Z OB | 25.156.0753.0 | 342 |
| 8291 R / 7/ 4 Z | 25.157.5453.0 | 343 |
| 8291 R / 7/ 4 Z OB | 25.157.4453.0 | 343 |
| 8291 R / 8 Z | 25.156.2853.0 | 342 |
| 8291 R / 8 Z OB | 25.156.0853.0 | 342 |
| 8291 R / 9 Z | 25.156.2953.0 | 342 |
| 8291 R / 9 Z OB | 25.156.0953.0 | 342 |
| 8291 R / 9/ 5 Z | 25.157.5553.0 | 343 |
| 8291 R / 9/ 5 Z OB | 25.157.4553.0 | 343 |
| 8291 R / 10 Z | 25.156.3053.0 | 342 |
| 8291 R / 10 Z OB | 25.156.1053.0 | 342 |
| 8291 R / 11 Z | 25.156.3153.0 | 342 |
| 8291 R / 11 Z OB | 25.156.1153.0 | 342 |
| 8291 R / 11/ 6 Z | 25.157.5653.0 | 343 |
| 8291 R / 11/ 6 Z OB | 25.157.4653.0 | 343 |
| 8291 R / 12 Z | 25.156.3253.0 | 342 |
| 8291 R / 12 Z OB | 25.156.1253.0 | 342 |
| 8291 R / 13 Z | 25.156.3353.0 | 342 |
| 8291 R / 13 Z OB | 25.156.1353.0 | 342 |
| 8291 R / 13/ 7 Z | 25.157.5753.0 | 343 |
| 8291 R / 14 Z | 25.156.3453.0 | 342 |
| 8291 R / 14 Z OB | 25.156.1453.0 | 342 |
| 8291 R/ 4 Z OB | 25.156.0453.0 | 342 |
| 8291R / 13/ 7 Z OB | 25.157.4753.0 | 343 |
| 8292 / 2 | 25.192.0253.0 | 338 |
| 8292 / 2 OB | 25.193.0253.0 | 338 |
| 8292 / 2 ZN | 25.192.9253.0 | 338 |
| 8292 / 2 ZN OB | 25.193.9253.0 | 338 |
| 8292 / 2 ZW OB | 25.193.6253.0 | 339 |
| 8292 / 3 | 25.192.0353.0 | 338 |
| 8292 / 3 OB | 25.193.0353.0 | 338 |
| 8292 / 3 ZN | 25.192.9353.0 | 338 |
| 8292 / 3 ZN OB | 25.193.9353.0 | 338 |
| 8292 / 3 ZW OB | 25.193.6353.0 | 339 |
| 8292 / 4 | 25.192.0453.0 | 338 |
| 8292 / 4 OB | 25.193.0453.0 | 338 |
| 8292 / 4 ZW OB | 25.193.6453.0 | 339 |
| 8292 / 5 | 25.192.0553.0 | 338 |
| 8292 / 5 OB | 25.193.0553.0 | 338 |
| 8292 / 5 ZW OB | 25.193.6553.0 | 339 |
| 8292 / 6 | 25.192.0653.0 | 338 |
| 8292 / 6 OB | 25.193.0653.0 | 338 |
| 8292 / 6 ZW OB | 25.193.6653.0 | 339 |
| 8292 / 7 | 25.192.0753.0 | 338 |
| 8292 / 7 OB | 25.193.0753.0 | 338 |
| 8292 / 7 ZW OB | 25.193.6753.0 | 339 |
| 8292 / 8 | 25.192.0853.0 | 338 |
| 8292 / 8 .OB | 25.193.0853.0 | 338 |
| 8292 / 8 ZW OB | 25.193.6853.0 | 339 |
| 8292 / 9 | 25.192.0953.0 | 338 |
| 8292 / 9 OB | 25.193.0953.0 | 338 |
| 8292 / 9 ZW OB | 25.193.6953.0 | 339 |
| 8292 / 10 | 25.192.1053.0 | 338 |
| 8292 / 10 OB | 25.193.1053.0 | 338 |
| 8292 / 10 ZW OB | 25.193.7053.0 | 339 |
| 8292 / 11 | 25.192.1153.0 | 338 |
| 8292 / 11 OB | 25.193.1153.0 | 338 |
| 8292 / 11 ZW OB | 25.193.7153.0 | 339 |
| 8292 / 12 | 25.192.1253.0 | 338 |
| 8292 / 12 OB | 25.193.1253.0 | 338 |
| 8292 / 12 ZW OB | 25.193.7253.0 | 339 |
| 8292 / 13 | 25.192.1353.0 | 338 |
| 8292 / 13 OB | 25.193.1353.0 | 338 |
| 8292 / 13 ZW OB | 25.193.7353.0 | 339 |
| 8292 / 14 | 25.192.1453.0 | 338 |
| 8292 / 14 OB | 25.193.1453.0 | 338 |
| 8292 / 14 ZW OB | 25.193.7453.0 | 339 |
| 8292 / 15 | 25.192.1553.0 | 338 |
| 8292 / 15 OB | 25.193.1553.0 | 338 |
| 8292 / 15 ZW OB | 25.193.7553.0 | 339 |
| 8292 / 16 | 25.192.1653.0 | 338 |

# contents


| Type | Part no. | section / page |
|---|---|---|
| 8292 / 16 OB | 25.193.1653.0 | 338 |
| 8292 / 16 ZW OB | 25.193.7653.0 | 339 |
| 8292 DH / 2 OB | 27.000.4253.0 | 340 |
| 8292 DH / 3 OB | 27.000.4353.0 | 340 |
| 8292 E / 2 / 4 | 25.199.0253.0 | 364 |
| 8292 E / 2 / 4 OB | 25.199.5253.0 | 364 |
| 8292 E / 2 / 4 ZN | 25.199.4253.0 | 364 |
| 8292 E / 2 / 4 ZN OB | 25.199.9253.0 | 364 |
| 8292 E / 3 / 6 | 25.199.0353.0 | 364 |
| 8292 E / 3 / 6 OB | 25.199.5353.0 | 364 |
| 8292 E / 3 / 6 ZN | 25.199.4353.0 | 364 |
| 8292 E / 3 / 6 ZN OB | 25.199.9353.0 | 364 |
| 8292 E / 4 / 8 | 25.199.0453.0 | 364 |
| 8292 E / 4 / 8 OB | 25.199.5453.0 | 364 |
| 8292 E / 5 / 10 | 25.199.0553.0 | 364 |
| 8292 E / 5 / 10 OB | 25.199.5553.0 | 364 |
| 8292 E / 6 / 12 | 25.199.0653.0 | 364 |
| 8292 E / 6 / 12 OB | 25.199.5653.0 | 364 |
| 8292 E / 7 / 14 | 25.199.0753.0 | 364 |
| 8292 E / 7 / 14 OB | 25.199.5753.0 | 364 |
| 8292 E / 8 / 16 | 25.199.0853.0 | 364 |
| 8292 E / 8 / 16 OB | 25.199.5853.0 | 364 |
| 8292 E / 9 / 18 | 25.199.0953.0 | 364 |
| 8292 E / 9 / 18 OB | 25.199.5953.0 | 364 |
| 8292 E / 10 / 20 | 25.199.1053.0 | 364 |
| 8292 E / 10 / 20 OB | 25.199.6053.0 | 364 |
| 8292 E / 11 / 22 | 25.199.1153.0 | 364 |
| 8292 E / 11 / 22 OB | 25.199.6153.0 | 364 |
| 8292 E / 12 / 24 | 25.199.1253.0 | 364 |
| 8292 E / 12 / 24 OB | 25.199.6253.0 | 364 |
| 8292 EH / 2 OB | 27.000.2253.0 | 340 |
| 8292 EH / 3 OB | 27.000.2353.0 | 340 |
| 8292 H / 2 OB | 27.000.0253.0 | 341 |
| 8292 H / 3 OB | 27.000.0353.0 | 341 |
| 8313 B / 2 | 25.360.0253.0 | 288 |
| 8313 B / 2 F | 25.324.0253.0 | 288 |
| 8313 B / 2 F OB | 25.324.2253.0 | 288 |
| 8313 B / 2 OB | 25.360.3253.0 | 288 |
| 8313 B / 3 | 25.360.0353.0 | 288 |
| 8313 B / 3 F | 25.324.0353.0 | 288 |
| 8313 B / 3 F OB | 25.324.2353.0 | 288 |
| 8313 B / 3 OB | 25.360.3353.0 | 288 |
| 8313 B / 4 | 25.360.0453.0 | 288 |
| 8313 B / 4 F | 25.324.0453.0 | 288 |
| 8313 B / 4 F OB | 25.324.2453.0 | 288 |
| 8313 B / 4 OB | 25.360.3453.0 | 288 |
| 8313 B / 5 | 25.360.0553.0 | 288 |
| 8313 B / 5 F | 25.324.0553.0 | 288 |
| 8313 B / 5 F OB | 25.324.2553.0 | 288 |
| 8313 B / 5 OB | 25.360.3553.0 | 288 |
| 8313 B / 6 | 25.360.0653.0 | 288 |
| 8313 B / 6 F | 25.324.0653.0 | 288 |
| 8313 B / 6 F OB | 25.324.2653.0 | 288 |
| 8313 B / 6 OB | 25.360.3653.0 | 288 |
| 8313 B / 7 | 25.360.0753.0 | 288 |
| 8313 B / 7 F | 25.324.0753.0 | 288 |
| 8313 B / 7 F OB | 25.324.2753.0 | 288 |
| 8313 B / 7 OB | 25.360.3753.0 | 288 |
| 8313 B / 8 | 25.360.0853.0 | 288 |
| 8313 B / 8 F | 25.324.0853.0 | 288 |
| 8313 B / 8 F OB | 25.324.2853.0 | 288 |
| 8313 B / 8 OB | 25.360.3853.0 | 288 |
| 8313 B / 9 | 25.360.0953.0 | 288 |
| 8313 B / 9 F | 25.324.0953.0 | 288 |
| 8313 B / 9 F OB | 25.324.2953.0 | 288 |
| 8313 B / 9 OB | 25.360.3953.0 | 288 |
| 8313 B / 10 | 25.360.1053.0 | 288 |
| 8313 B / 10 F | 25.324.1053.0 | 288 |
| 8313 B / 10 F OB | 25.324.3053.0 | 288 |
| 8313 B / 10 OB | 25.360.4053.0 | 288 |
| 8313 B / 11 | 25.360.1153.0 | 288 |
| 8313 B / 11 F | 25.324.1153.0 | 288 |
| 8313 B / 11 F OB | 25.324.3153.0 | 288 |
| 8313 B / 11 OB | 25.360.4153.0 | 288 |
| 8313 B / 12 | 25.360.1253.0 | 288 |
| 8313 B / 12 F | 25.324.1253.0 | 288 |
| 8313 B / 12 F OB | 25.324.3253.0 | 288 |
| 8313 B / 12 OB | 25.360.4253.0 | 288 |
| 8313 S / 2 G OB | 25.370.3253.0 | 300 |
| 8313 S / 2 GF OB | 25.374.6253.0 | 300 |
| 8313 S / 2 W OB | 25.372.3253.0 | 301 |
| 8313 S / 2 WF OB | 25.374.2253.0 | 301 |
| 8313 S / 3 G OB | 25.370.3353.0 | 300 |
| 8313 S / 3 GF OB | 25.374.6353.0 | 300 |
| 8313 S / 3 W OB | 25.372.3353.0 | 301 |
| 8313 S / 3 WF OB | 25.374.2353.0 | 301 |
| 8313 S / 4 G OB | 25.370.3453.0 | 300 |
| 8313 S / 4 GF OB | 25.374.6453.0 | 300 |
| 8313 S / 4 W OB | 25.372.3453.0 | 301 |
| 8313 S / 4 WF OB | 25.374.2453.0 | 301 |
| 8313 S / 5 G OB | 25.370.3553.0 | 300 |
| 8313 S / 5 GF OB | 25.374.6553.0 | 300 |
| 8313 S / 5 W OB | 25.372.3553.0 | 301 |
| 8313 S / 5 WF OB | 25.374.2553.0 | 301 |
| 8313 S / 6 G OB | 25.370.3653.0 | 300 |
| 8313 S / 6 GF OB | 25.374.6653.0 | 300 |
| 8313 S / 6 W OB | 25.372.3653.0 | 301 |
| 8313 S / 6 WF OB | 25.374.2653.0 | 301 |
| 8313 S / 7 G OB | 25.370.3753.0 | 300 |
| 8313 S / 7 GF OB | 25.374.6753.0 | 300 |
| 8313 S / 7 W OB | 25.372.3753.0 | 301 |
| 8313 S / 7 WF OB | 25.374.2753.0 | 301 |
| 8313 S / 8 G OB | 25.370.3853.0 | 300 |
| 8313 S / 8 GF OB | 25.374.6853.0 | 300 |
| 8313 S / 8 W OB | 25.372.3853.0 | 301 |
| 8313 S / 8 WF OB | 25.374.2853.0 | 301 |
| 8313 S / 9 G OB | 25.370.3953.0 | 300 |
| 8313 S / 9 GF OB | 25.374.6953.0 | 300 |
| 8313 S / 9 W OB | 25.372.3953.0 | 301 |
| 8313 S / 9 WF OB | 25.374.2953.0 | 301 |
| 8313 S / 10 G OB | 25.370.4053.0 | 300 |
| 8313 S / 10 GF OB | 25.374.7053.0 | 300 |
| 8313 S / 10 W OB | 25.372.4053.0 | 301 |
| 8313 S / 10 WF OB | 25.374.3053.0 | 301 |
| 8313 S / 11 G OB | 25.370.4153.0 | 300 |
| 8313 S / 11 GF OB | 25.374.7153.0 | 300 |
| 8313 S / 11 W OB | 25.372.4153.0 | 301 |
| 8313 S / 11 WF OB | 25.374.3153.0 | 301 |
| 8313 S / 12 G OB | 25.370.4253.0 | 300 |
| 8313 S / 12 GF OB | 25.374.7253.0 | 300 |
| 8313 S / 12 W OB | 25.372.4253.0 | 301 |
| 8313 S / 12 WF OB | 25.374.3253.0 | 301 |
| 8358 / 2 TOP H OB | 25.792.0253.0 | 354 |
| 8358 / 2 TOP V OB | 25.782.0253.0 | 354 |
| 8358 / 3 TOP H OB | 25.792.0353.0 | 354 |
| 8358 / 3 TOP V OB | 25.782.0353.0 | 354 |
| 8358 / 4 TOP H OB | 25.792.0453.0 | 354 |
| 8358 / 4 TOP V OB | 25.782.0453.0 | 354 |
| 8358 / 5 TOP H OB | 25.792.0553.0 | 354 |
| 8358 / 5 TOP V OB | 25.782.0553.0 | 354 |
| 8358 / 6 TOP H OB | 25.792.0653.0 | 354 |
| 8358 / 6 TOP V OB | 25.782.0653.0 | 354 |
| 8358 / 7 TOP H OB | 25.792.0753.0 | 354 |
| 8358 / 7 TOP V OB | 25.782.0753.0 | 354 |
| 8358 / 8 TOP H OB | 25.792.0853.0 | 354 |
| 8358 / 8 TOP V OB | 25.782.0853.0 | 354 |
| 8358 / 9 TOP H OB | 25.792.0953.0 | 354 |
| 8358 / 9 TOP V OB | 25.782.0953.0 | 354 |
| 8358 / 10 TOP H OB | 25.792.1053.0 | 354 |
| 8358 / 10 TOP V OB | 25.782.1053.0 | 354 |
| 8358 / 11 TOP H OB | 25.792.1153.0 | 354 |
| 8358 / 11 TOP V OB | 25.782.1153.0 | 354 |
| 8358 / 12 TOP H OB | 25.792.1253.0 | 354 |
| 8358 / 12 TOP V OB | 25.782.1253.0 | 354 |
| 8358 / 13 TOP H OB | 25.792.1353.0 | 354 |
| 8358 / 13 TOP V OB | 25.782.1353.0 | 354 |
| 8358 / 14 TOP H OB | 25.792.1453.0 | 354 |
| 8358 / 14 TOP V OB | 25.782.1453.0 | 354 |
| 8358 / 15 TOP H OB | 25.792.1553.0 | 354 |
| 8358 / 15 TOP V OB | 25.782.1553.0 | 354 |
| 8358 / 16 TOP H OB | 25.792.1653.0 | 354 |
| 8358 / 16 TOP V OB | 25.782.1653.0 | 354 |
| 8375/ 1/ 7,5 | 25.700.0153.0 | 374 |
| 8385 TOP H | 25.761.3253.0 | 352 |
| 8385 TOP H | 25.761.3453.0 | 352 |
| 8385 TOP H | 25.761.3553.0 | 352 |
| 8385 TOP H | 25.761.3653.0 | 352 |
| 8385 TOP H | 25.761.3753.0 | 352 |
| 8385 TOP H | 25.761.3853.0 | 352 |
| 8385 TOP V | 25.761.0453.0 | 351 |
| 8385 TOP V | 25.761.0553.0 | 351 |
| 8385 TOP V | 25.761.0753.0 | 351 |
| 8385 TOP V | 25.761.0853.0 | 351 |
| 8385/ 1 TOP H | 25.761.0153.0 | 352 |
| 8385/ 1 TOP V | 25.761.0053.0 | 351 |
| 8385/ 2 TOP V | 25.761.0253.0 | 351 |
| 8385/ 3 TOP H | 25.761.3353.0 | 352 |
| 8385/ 3 TOP V | 25.761.0353.0 | 351 |
| 8385/ 6 TOP V | 25.761.0653.0 | 351 |
| 8390 / 2 | 25.150.0253.0 | 359 |
| 8390 / 2 OB | 25.151.0253.0 | 359 |
| 8390 / 3 | 25.150.0353.0 | 359 |
| 8390 / 3 OB | 25.151.0353.0 | 359 |
| 8390 / 4 | 25.150.0453.0 | 359 |
| 8390 / 4 OB | 25.151.0453.0 | 359 |
| 8390 / 5 | 25.150.0553.0 | 359 |
| 8390 / 5 OB | 25.151.0553.0 | 359 |
| 8390 / 6 | 25.150.0653.0 | 359 |
| 8390 / 6 OB | 25.151.0653.0 | 359 |
| 8390 / 7 | 25.150.0753.0 | 359 |
| 8390 / 7 OB | 25.151.0753.0 | 359 |
| 8390 / 8 | 25.150.0853.0 | 359 |
| 8390 / 8 OB | 25.151.0853.0 | 359 |
| 8390 / 9 | 25.150.0953.0 | 359 |
| 8390 / 9 OB | 25.151.0953.0 | 359 |
| 8390 / 10 | 25.150.1053.0 | 359 |
| 8390 / 10 OB | 25.151.1053.0 | 359 |
| 8390 / 11 | 25.150.1153.0 | 359 |
| 8390 / 11 OB | 25.151.1153.0 | 359 |
| 8390 / 12 | 25.150.1253.0 | 359 |
| 8390 / 12 OB | 25.151.1253.0 | 359 |
| 8391 / 2 | 25.164.0253.0 | 346 |
| 8391 / 2 OB | 25.165.0253.0 | 346 |
| 8391 / 2 Z | 25.164.3253.0 | 347 |
| 8391 / 2 Z OB | 25.165.3253.0 | 346 |
| 8391 / 2 ZN | 25.174.0253.0 | 347 |
| 8391 / 2 ZN OB | 25.175.0253.0 | 346 |
| 8391 / 2 ZW | 25.164.6253.0 | 347 |
| 8391 / 2 ZW OB | 25.165.6253.0 | 347 |
| 8391 / 3 | 25.164.0353.0 | 346 |
| 8391 / 3 OB | 25.165.0353.0 | 346 |
| 8391 / 3 Z | 25.164.3353.0 | 347 |
| 8391 / 3 Z OB | 25.165.3353.0 | 346 |
| 8391 / 3 ZN | 25.174.0353.0 | 347 |
| 8391 / 3 ZN OB | 25.175.0353.0 | 346 |
| 8391 / 3 ZW | 25.164.6353.0 | 347 |
| 8391 / 3 ZW OB | 25.165.6353.0 | 347 |
| 8413 B / 2 | 25.380.0253.0 | 288 |
| 8413 B / 2 F | 25.324.4253.0 | 288 |
| 8413 B / 2 F OB | 25.324.6253.0 | 288 |
| 8413 B / 2 OB | 25.380.3253.0 | 288 |
| 8413 B / 2 VL | 25.386.0253.0 | 290 |
| 8413 B / 2 VL OB | 25.386.2253.0 | 290 |
| 8413 B / 2 VR | 25.385.0253.0 | 290 |
| 8413 B / 2 VR OB | 25.385.2253.0 | 290 |
| 8413 B / 3 | 25.380.0353.0 | 288 |
| 8413 B / 3 F | 25.324.4353.0 | 288 |
| 8413 B / 3 F OB | 25.324.6353.0 | 288 |
| 8413 B / 3 OB | 25.380.3353.0 | 288 |
| 8413 B / 3 VL | 25.386.0353.0 | 290 |
| 8413 B / 3 VL OB | 25.386.2353.0 | 290 |
| 8413 B / 3 VR | 25.385.0353.0 | 290 |
| 8413 B / 3 VR OB | 25.385.2353.0 | 290 |
| 8413 B / 4 | 25.380.0453.0 | 288 |
| 8413 B / 4 F | 25.324.4453.0 | 288 |
| 8413 B / 4 F OB | 25.324.6453.0 | 288 |
| 8413 B / 4 OB | 25.380.3453.0 | 288 |
| 8413 B / 4 VL | 25.386.0453.0 | 290 |
| 8413 B / 4 VL OB | 25.386.2453.0 | 290 |
| 8413 B / 4 VR | 25.385.0453.0 | 290 |
| 8413 B / 4 VR OB | 25.385.2453.0 | 290 |
| 8413 B / 5 | 25.380.0553.0 | 288 |
| 8413 B / 5 F | 25.324.4553.0 | 288 |
| 8413 B / 5 F OB | 25.324.6553.0 | 288 |
| 8413 B / 5 OB | 25.380.3553.0 | 288 |
| 8413 B / 5 VL | 25.386.0553.0 | 290 |
| 8413 B / 5 VL OB | 25.386.2553.0 | 290 |
| 8413 B / 5 VR | 25.385.0553.0 | 290 |
| 8413 B / 5 VR OB | 25.385.2553.0 | 290 |
| 8413 B / 6 | 25.380.0653.0 | 288 |
| 8413 B / 6 F | 25.324.4653.0 | 288 |
| 8413 B / 6 F OB | 25.324.6653.0 | 288 |
| 8413 B / 6 OB | 25.380.3653.0 | 288 |
| 8413 B / 6 VL | 25.386.0653.0 | 290 |
| 8413 B / 6 VL OB | 25.386.2653.0 | 290 |
| 8413 B / 6 VR | 25.385.0653.0 | 290 |
| 8413 B / 6 VR OB | 25.385.2653.0 | 290 |
| 8413 B / 7 | 25.380.0753.0 | 288 |
| 8413 B / 7 F | 25.324.4753.0 | 288 |
| 8413 B / 7 F OB | 25.324.6753.0 | 288 |
| 8413 B / 7 OB | 25.380.3753.0 | 288 |
| 8413 B / 7 VL | 25.386.0753.0 | 290 |
| 8413 B / 7 VL OB | 25.386.2753.0 | 290 |
| 8413 B / 7 VR | 25.385.0753.0 | 290 |
| 8413 B / 7 VR OB | 25.385.2753.0 | 290 |
| 8413 B / 8 | 25.380.0853.0 | 288 |
| 8413 B / 8 F | 25.324.4853.0 | 288 |
| 8413 B / 8 F OB | 25.324.6853.0 | 288 |
| 8413 B / 8 OB | 25.380.3853.0 | 288 |
| 8413 B / 8 VL | 25.386.0853.0 | 290 |
| 8413 B / 8 VL OB | 25.386.2853.0 | 290 |
| 8413 B / 8 VR | 25.385.0853.0 | 290 |
| 8413 B / 8 VR OB | 25.385.2853.0 | 290 |
| 8413 B / 9 | 25.380.0953.0 | 288 |
| 8413 B / 9 F | 25.324.4953.0 | 288 |
| 8413 B / 9 F OB | 25.324.6953.0 | 288 |
| 8413 B / 9 OB | 25.380.3953.0 | 288 |
| 8413 B / 9 VL | 25.386.0953.0 | 290 |
| 8413 B / 9 VL OB | 25.386.2953.0 | 290 |
| 8413 B / 9 VR | 25.385.0953.0 | 290 |
| 8413 B / 9 VR OB | 25.385.2953.0 | 290 |
| 8413 B / 10 | 25.380.1053.0 | 288 |
| 8413 B / 10 F | 25.324.5053.0 | 288 |
| 8413 B / 10 F OB | 25.324.7053.0 | 288 |
| 8413 B / 10 OB | 25.380.4053.0 | 288 |
| 8413 B / 10 VL | 25.386.1053.0 | 290 |
| 8413 B / 10 VL OB | 25.386.3053.0 | 290 |
| 8413 B / 10 VR | 25.385.1053.0 | 290 |
| 8413 B / 10 VR OB | 25.385.3053.0 | 290 |
| 8413 B / 11 | 25.380.1153.0 | 288 |
| 8413 B / 11 F | 25.324.5153.0 | 288 |
| 8413 B / 11 F OB | 25.324.7153.0 | 288 |
| 8413 B / 11 OB | 25.380.4153.0 | 288 |
| 8413 B / 11 VL | 25.386.1153.0 | 290 |
| 8413 B / 11 VL OB | 25.386.3153.0 | 290 |
| 8413 B / 11 VR | 25.385.1153.0 | 290 |
| 8413 B / 11 VR OB | 25.385.3153.0 | 290 |
| 8413 B / 12 | 25.380.1253.0 | 288 |
| 8413 B / 12 F | 25.324.5253.0 | 288 |
| 8413 B / 12 F OB | 25.324.7253.0 | 288 |
| 8413 B / 12 OB | 25.380.4253.0 | 288 |
| 8413 B / 12 VL | 25.386.1253.0 | 290 |
| 8413 B / 12 VL OB | 25.386.3253.0 | 290 |
| 8413 B / 12 VR | 25.385.1253.0 | 290 |
| 8413 B / 12 VR OB | 25.385.3253.0 | 290 |
| 8413 BFK / 2 TOP K | 25.880.0253.0 | 294 |
| 8413 BFK / 2 TOP K OB | 25.880.3253.0 | 294 |
| 8413 BFK / 2 TOP K F | 25.881.0253.0 | 294 |
| 8413 BFK / 2 TOP K F OB | 25.881.3253.0 | 294 |
| 8413 BFK / 3 TOP K | 25.880.0353.0 | 294 |
| 8413 BFK / 3 TOP K OB | 25.880.3353.0 | 294 |
| 8413 BFK / 3 TOP K F | 25.881.0353.0 | 294 |
| 8413 BFK / 3 TOP K F OB | 25.881.3353.0 | 294 |
| 8413 BFK / 4 TOP K | 25.880.0453.0 | 294 |
| 8413 BFK / 4 TOP K OB | 25.880.3453.0 | 294 |
| 8413 BFK / 4 TOP K F | 25.881.0453.0 | 294 |
| 8413 BFK / 4 TOP K F OB | 25.881.3453.0 | 294 |
| 8413 BFK / 5 TOP K | 25.880.0553.0 | 294 |
| 8413 BFK / 5 TOP K OB | 25.880.3553.0 | 294 |
| 8413 BFK / 5 TOP K F | 25.881.0553.0 | 294 |
| 8413 BFK / 5 TOP K F OB | 25.881.3553.0 | 294 |
| 8413 BFK / 6 TOP K | 25.880.0653.0 | 294 |
| 8413 BFK / 6 TOP K OB | 25.880.3653.0 | 294 |
| 8413 BFK / 6 TOP K F | 25.881.0653.0 | 294 |
| 8413 BFK / 6 TOP K F OB | 25.881.3653.0 | 294 |
| 8413 BFK / 7 TOP K | 25.880.0753.0 | 294 |
| 8413 BFK / 7 TOP K OB | 25.880.3753.0 | 294 |
| 8413 BFK / 7 TOP K F | 25.881.0753.0 | 294 |
| 8413 BFK / 7 TOP K F OB | 25.881.3753.0 | 294 |
| 8413 BFK / 8 TOP K | 25.880.0853.0 | 294 |
| 8413 BFK / 8 TOP K OB | 25.880.3853.0 | 294 |

# contents of type description

# contents TYPE


| Type | Part no. | section / page |
|---|---|---|
| 8413 BFK / 8 TOP K F | 25.881.0853.0 | 294 |
| 8413 BFK / 8 TOP K F OB | 25.881.3853.0 | 294 |
| 8413 BFK / 9 TOP K | 25.880.0953.0 | 294 |
| 8413 BFK / 9 TOP K OB | 25.880.3953.0 | 294 |
| 8413 BFK / 9 TOP K F | 25.881.0953.0 | 294 |
| 8413 BFK / 9 TOP K F OB | 25.881.3953.0 | 294 |
| 8413 BFK /10 TOP K | 25.880.1053.0 | 294 |
| 8413 BFK /10 TOP K OB | 25.880.4053.0 | 294 |
| 8413 BFK /10 TOP K F | 25.881.1053.0 | 294 |
| 8413 BFK /10 TOP K F OB | 25.881.4053.0 | 294 |
| 8413 BFK /11 TOP K | 25.880.1153.0 | 294 |
| 8413 BFK /11 TOP K OB | 25.880.4153.0 | 294 |
| 8413 BFK /11 TOP K F | 25.881.1153.0 | 294 |
| 8413 BFK /11 TOP K F OB | 25.881.4153.0 | 294 |
| 8413 BFK /12 TOP K | 25.880.1253.0 | 294 |
| 8413 BFK /12 TOP K OB | 25.880.4253.0 | 294 |
| 8413 BFK /12 TOP K F | 25.881.1253.0 | 294 |
| 8413 BFK /12 TOP K F OB | 25.881.4253.0 | 294 |
| 8413 S / 2 G OB | 25.390.3253.0 | 300 |
| 8413 S / 2 GF OB | 25.398.6253.0 | 300 |
| 8413 S / 2 W OB | 25.392.3253.0 | 301 |
| 8413 S / 2 WF OB | 25.398.2253.0 | 301 |
| 8413 S / 3 G OB | 25.390.3353.0 | 300 |
| 8413 S / 3 GF OB | 25.398.6353.0 | 300 |
| 8413 S / 3 W OB | 25.392.3353.0 | 301 |
| 8413 S / 3 WF OB | 25.398.2353.0 | 301 |
| 8413 S / 4 G OB | 25.390.3453.0 | 300 |
| 8413 S / 4 GF OB | 25.398.6453.0 | 300 |
| 8413 S / 4 W OB | 25.392.3453.0 | 301 |
| 8413 S / 4 WF OB | 25.398.2453.0 | 301 |
| 8413 S / 5 G OB | 25.390.3553.0 | 300 |
| 8413 S / 5 GF OB | 25.398.6553.0 | 300 |
| 8413 S / 5 W OB | 25.392.3553.0 | 301 |
| 8413 S / 5 WF OB | 25.398.2553.0 | 301 |
| 8413 S / 6 G OB | 25.390.3653.0 | 300 |
| 8413 S / 6 GF OB | 25.398.6653.0 | 300 |
| 8413 S / 6 W OB | 25.392.3653.0 | 301 |
| 8413 S / 6 WF OB | 25.398.2653.0 | 301 |
| 8413 S / 7 G OB | 25.390.3753.0 | 300 |
| 8413 S / 7 GF OB | 25.398.6753.0 | 300 |
| 8413 S / 7 W OB | 25.392.3753.0 | 301 |
| 8413 S / 7 WF OB | 25.398.2753.0 | 301 |
| 8413 S / 8 G OB | 25.390.3853.0 | 300 |
| 8413 S / 8 GF OB | 25.398.6853.0 | 300 |
| 8413 S / 8 W OB | 25.392.3853.0 | 301 |
| 8413 S / 8 WF OB | 25.398.2853.0 | 301 |
| 8413 S / 9 G OB | 25.390.3953.0 | 300 |
| 8413 S / 9 GF OB | 25.398.6953.0 | 300 |
| 8413 S / 9 W OB | 25.392.3953.0 | 301 |
| 8413 S / 9 WF OB | 25.398.2953.0 | 301 |
| 8413 S / 10 G OB | 25.390.4053.0 | 300 |
| 8413 S / 10 GF OB | 25.398.7053.0 | 300 |
| 8413 S / 10 W OB | 25.392.4053.0 | 301 |
| 8413 S / 10 WF OB | 25.398.3053.0 | 301 |
| 8413 S / 11 G OB | 25.390.4153.0 | 300 |
| 8413 S / 11 GF OB | 25.398.7153.0 | 300 |
| 8413 S / 11 W OB | 25.392.4153.0 | 301 |
| 8413 S / 11 WF OB | 25.398.3153.0 | 301 |
| 8413 S / 12 G OB | 25.390.4253.0 | 300 |
| 8413 S / 12 GF OB | 25.398.7253.0 | 300 |
| 8413 S / 12 W OB | 25.392.4253.0 | 301 |
| 8413 S / 12 WF OB | 25.398.3253.0 | 301 |
| 8458 / 2 TOP H OB | 25.793.0253.0 | 354 |
| 8458 / 2 TOP V OB | 25.783.0253.0 | 354 |
| 8458 / 3 TOP H OB | 25.793.0353.0 | 354 |
| 8458 / 3 TOP V OB | 25.783.0353.0 | 354 |
| 8458 / 4 TOP H OB | 25.793.0453.0 | 354 |
| 8458 / 4 TOP V OB | 25.783.0453.0 | 354 |
| 8458 / 5 TOP H OB | 25.793.0553.0 | 354 |
| 8458 / 5 TOP V OB | 25.783.0553.0 | 354 |
| 8458 / 6 TOP H OB | 25.793.0653.0 | 354 |
| 8458 / 6 TOP V OB | 25.783.0653.0 | 354 |
| 8458 / 7 TOP H OB | 25.793.0753.0 | 354 |
| 8458 / 7 TOP V OB | 25.783.0753.0 | 354 |
| 8458 / 8 TOP H OB | 25.793.0853.0 | 354 |
| 8458 / 8 TOP V OB | 25.783.0853.0 | 354 |
| 8458 / 9 TOP H OB | 25.793.0953.0 | 354 |
| 8458 / 9 TOP V OB | 25.783.0953.0 | 354 |
| 8458 / 10 TOP H OB | 25.793.1053.0 | 354 |
| 8458 / 10 TOP V OB | 25.783.1053.0 | 354 |
| 8458 / 11 TOP H OB | 25.793.1153.0 | 354 |
| 8458 / 11 TOP V OB | 25.783.1153.0 | 354 |
| 8458 / 12 TOP H OB | 25.793.1253.0 | 354 |
| 8458 / 12 TOP V OB | 25.783.1253.0 | 354 |
| 8458 / 13 TOP H OB | 25.793.1353.0 | 354 |
| 8458 / 13 TOP V OB | 25.783.1353.0 | 354 |
| 8458 / 14 TOP H OB | 25.793.1453.0 | 354 |
| 8458 / 14 TOP V OB | 25.783.1453.0 | 354 |
| 8458 / 15 TOP H OB | 25.793.1553.0 | 354 |
| 8458 / 15 TOP V OB | 25.783.1553.0 | 354 |
| 8458 / 16 TOP H OB | 25.793.1653.0 | 354 |
| 8458 / 16 TOP V OB | 25.783.1653.0 | 354 |
| 8485 TOP H | 25.771.3453.0 | 352 |
| 8485 TOP H | 25.771.3553.0 | 352 |
| 8485 TOP H | 25.771.3753.0 | 352 |
| 8485 TOP H | 25.771.3853.0 | 352 |
| 8485 TOP V | 25.771.0653.0 | 351 |
| 8485 TOP V | 25.771.0753.0 | 351 |
| 8485 TOP V | 25.771.0853.0 | 351 |
| 8485/ 1 TOP H | 25.771.0153.0 | 352 |
| 8485/ 1 TOP V | 25.771.0053.0 | 351 |
| 8485/ 2 TOP H | 25.771.3253.0 | 352 |
| 8485/ 2 TOP V | 25.771.0253.0 | 351 |
| 8485/ 3 TOP H | 25.771.3353.0 | 352 |
| 8485/ 3 TOP V | 25.771.0353.0 | 351 |
| 8485/ 4 TOP V | 25.771.0453.0 | 351 |
| 8485/ 5 TOP V | 25.771.0553.0 | 351 |
| 8485/ 6 TOP H | 25.771.3653.0 | 352 |
| 8486 / 3 TOP H OB | 27.713.0353.0 | 356 |
| 8486 / 3 TOP V OB | 27.703.0353.0 | 356 |
| 8486 / 4 TOP H OB | 27.713.0453.0 | 356 |
| 8486 / 4 TOP V OB | 27.703.0453.0 | 356 |
| 8491 / 2 | 25.166.0253.0 | 346 |
| 8491 / 2 OB | 25.167.0253.0 | 346 |
| 8491 / 2 Z | 25.166.3253.0 | 347 |
| 8491 / 2 Z OB | 25.167.3253.0 | 346 |
| 8491 / 2 ZN | 25.176.0253.0 | 347 |
| 8491 / 2 ZN OB | 25.177.0253.0 | 346 |
| 8491 / 2 ZW | 25.166.6253.0 | 347 |
| 8491 / 2 ZW OB | 25.167.6253.0 | 347 |
| 8491 / 3 | 25.166.0353.0 | 346 |
| 8491 / 3 OB | 25.167.0353.0 | 346 |
| 8491 / 3 Z | 25.166.3353.0 | 347 |
| 8491 / 3 Z OB | 25.167.3353.0 | 346 |
| 8491 / 3 ZN | 25.176.0353.0 | 347 |
| 8491 / 3 ZN OB | 25.177.0353.0 | 346 |
| 8491 / 3 ZW | 25.166.6353.0 | 347 |
| 8491 / 3 ZW OB | 25.167.6353.0 | 347 |
| 8513 B / 2 | 25.640.0253.0 | 280 |
| 8513 B / 2 F | 25.641.0253.0 | 280 |
| 8513 B / 2 F OB | 25.641.3253.0 | 280 |
| 8513 B / 2 OB | 25.640.3253.0 | 280 |
| 8513 B / 3 | 25.640.0353.0 | 280 |
| 8513 B / 3 F | 25.641.0353.0 | 280 |
| 8513 B / 3 F OB | 25.641.3353.0 | 280 |
| 8513 B / 3 OB | 25.640.3353.0 | 280 |
| 8513 B / 4 | 25.640.0453.0 | 280 |
| 8513 B / 4 F | 25.641.0453.0 | 280 |
| 8513 B / 4 F OB | 25.641.3453.0 | 280 |
| 8513 B / 4 OB | 25.640.3453.0 | 280 |
| 8513 B / 5 | 25.640.0553.0 | 280 |
| 8513 B / 5 F | 25.641.0553.0 | 280 |
| 8513 B / 5 F OB | 25.641.3553.0 | 280 |
| 8513 B / 5 OB | 25.640.3553.0 | 280 |
| 8513 B / 6 | 25.640.0653.0 | 280 |
| 8513 B / 6 F | 25.641.0653.0 | 280 |
| 8513 B / 6 F OB | 25.641.3653.0 | 280 |
| 8513 B / 6 OB | 25.640.3653.0 | 280 |
| 8513 B / 7 | 25.640.0753.0 | 280 |
| 8513 B / 7 F | 25.641.0753.0 | 280 |
| 8513 B / 7 F OB | 25.641.3753.0 | 280 |
| 8513 B / 7 OB | 25.640.3753.0 | 280 |
| 8513 B / 8 | 25.640.0853.0 | 280 |
| 8513 B / 8 F | 25.641.0853.0 | 280 |
| 8513 B / 8 F OB | 25.641.3853.0 | 280 |
| 8513 B / 8 OB | 25.640.3853.0 | 280 |
| 8513 B / 9 | 25.640.0953.0 | 280 |
| 8513 B / 9 F | 25.641.0953.0 | 280 |
| 8513 B / 9 F OB | 25.641.3953.0 | 280 |
| 8513 B / 9 OB | 25.640.3953.0 | 280 |
| 8513 B / 10 | 25.640.1053.0 | 280 |
| 8513 B / 10 F | 25.641.1053.0 | 280 |
| 8513 B / 10 F OB | 25.641.4053.0 | 280 |
| 8513 B / 10 OB | 25.640.4053.0 | 280 |
| 8513 B / 11 | 25.640.1153.0 | 280 |
| 8513 B / 11 F | 25.641.1153.0 | 280 |
| 8513 B / 11 F OB | 25.641.4153.0 | 280 |
| 8513 B / 11 OB | 25.640.4153.0 | 280 |
| 8513 B / 12 | 25.640.1253.0 | 280 |
| 8513 B / 12 F | 25.641.1253.0 | 280 |
| 8513 B / 12 F OB | 25.641.4253.0 | 280 |
| 8513 B / 12 OB | 25.640.4253.0 | 280 |
| 8513 B / 13 | 25.640.1353.0 | 280 |
| 8513 B / 13 F | 25.641.1353.0 | 280 |
| 8513 B / 13 F OB | 25.641.4353.0 | 280 |
| 8513 B / 13 OB | 25.640.4353.0 | 280 |
| 8513 B / 14 | 25.640.1453.0 | 280 |
| 8513 B / 14 F | 25.641.1453.0 | 280 |
| 8513 B / 14 F OB | 25.641.4453.0 | 280 |
| 8513 B / 14 OB | 25.640.4453.0 | 280 |
| 8513 B / 15 | 25.640.1553.0 | 280 |
| 8513 B / 15 F | 25.641.1553.0 | 280 |
| 8513 B / 15 F OB | 25.641.4553.0 | 280 |
| 8513 B / 15 OB | 25.640.4553.0 | 280 |
| 8513 B / 16 | 25.640.1653.0 | 280 |
| 8513 B / 16 F | 25.641.1653.0 | 280 |
| 8513 B / 16 F OB | 25.641.4653.0 | 280 |
| 8513 B / 16 OB | 25.640.4653.0 | 280 |
| 8513 BDK/10 TOP | 25.630.1053.0 | 281 |
| 8513 BFK/ 2 TOP | 25.630.0253.0 | 281 |
| 8513 BFK/ 2 TOP OB | 25.630.3253.0 | 281 |
| 8513 BFK/ 3 TOP | 25.630.0353.0 | 281 |
| 8513 BFK/ 3 TOP OB | 25.630.3353.0 | 281 |
| 8513 BFK/ 4 TOP | 25.630.0453.0 | 281 |
| 8513 BFK/ 4 TOP OB | 25.630.3453.0 | 281 |
| 8513 BFK/ 5 TOP | 25.630.0553.0 | 281 |
| 8513 BFK/ 5 TOP OB | 25.630.3553.0 | 281 |
| 8513 BFK/ 6 TOP | 25.630.0653.0 | 281 |
| 8513 BFK/ 6 TOP OB | 25.630.3653.0 | 281 |
| 8513 BFK/ 7 TOP | 25.630.0753.0 | 281 |
| 8513 BFK/ 7 TOP OB | 25.630.3753.0 | 281 |
| 8513 BFK/ 8 TOP | 25.630.0853.0 | 281 |
| 8513 BFK/ 8 TOP OB | 25.630.3853.0 | 281 |
| 8513 BFK/ 9 TOP | 25.630.0953.0 | 281 |
| 8513 BFK/ 9 TOP OB | 25.630.3953.0 | 281 |
| 8513 BFK/10 TOP OB | 25.630.4053.0 | 281 |
| 8513 BFK/11 TOP | 25.630.1153.0 | 281 |
| 8513 BFK/11 TOP OB | 25.630.4153.0 | 281 |
| 8513 BFK/12 TOP | 25.630.1253.0 | 281 |
| 8513 BFK/12 TOP OB | 25.630.4253.0 | 281 |
| 8513 BFK/13 TOP | 25.630.1353.0 | 281 |
| 8513 BFK/13 TOP OB | 25.630.4353.0 | 281 |
| 8513 BFK/14 TOP | 25.630.1453.0 | 281 |
| 8513 BFK/14 TOP OB | 25.630.4453.0 | 281 |
| 8513 BFK/15 TOP | 25.630.1553.0 | 281 |
| 8513 BFK/15 TOP OB | 25.630.4553.0 | 281 |
| 8513 BFK/16 TOP | 25.630.1653.0 | 281 |
| 8513 BFK/16 TOP OB | 25.630.4653.0 | 281 |
| 8513 S / 2 G | 25.646.0253.0 | 284 |
| 8513 S / 2 G F | 25.646.3253.0 | 285 |
| 8513 S / 2 W | 25.647.0253.0 | 284 |
| 8513 S / 2 W F | 25.647.3253.0 | 285 |
| 8513 S / 3 G | 25.646.0353.0 | 284 |
| 8513 S / 3 GF | 25.646.3353.0 | 285 |
| 8513 S / 3 W | 25.647.0353.0 | 284 |
| 8513 S / 3 WF | 25.647.3353.0 | 285 |
| 8513 S / 4 G | 25.646.0453.0 | 284 |
| 8513 S / 4 GF | 25.646.3453.0 | 285 |
| 8513 S / 4 W | 25.647.0453.0 | 284 |
| 8513 S / 4 WF | 25.647.3453.0 | 285 |
| 8513 S / 5 G | 25.646.0553.0 | 284 |
| 8513 S / 5 GF | 25.646.3553.0 | 285 |
| 8513 S / 5 W | 25.647.0553.0 | 284 |
| 8513 S / 5 WF | 25.647.3553.0 | 285 |
| 8513 S / 6 G | 25.646.0653.0 | 284 |
| 8513 S / 6 GF | 25.646.3653.0 | 285 |
| 8513 S / 6 W | 25.647.0653.0 | 284 |
| 8513 S / 6 WF | 25.647.3653.0 | 285 |
| 8513 S / 7 G | 25.646.0753.0 | 284 |
| 8513 S / 7 GF | 25.646.3753.0 | 285 |
| 8513 S / 7 W | 25.647.0753.0 | 284 |
| 8513 S / 7 WF | 25.647.3753.0 | 285 |
| 8513 S / 8 G | 25.646.0853.0 | 284 |
| 8513 S / 8 GF | 25.646.3853.0 | 285 |
| 8513 S / 8 W | 25.647.0853.0 | 284 |
| 8513 S / 8 WF | 25.647.3853.0 | 285 |
| 8513 S / 9 G | 25.646.0953.0 | 284 |
| 8513 S / 9 GF | 25.646.3953.0 | 285 |
| 8513 S / 9 W | 25.647.0953.0 | 284 |
| 8513 S / 9 WF | 25.647.3953.0 | 285 |
| 8513 S / 10 G | 25.646.1053.0 | 284 |
| 8513 S / 10 GF | 25.646.4053.0 | 285 |
| 8513 S / 10 W | 25.647.1053.0 | 284 |
| 8513 S / 10 WF | 25.647.4053.0 | 285 |
| 8513 S / 11 G | 25.646.1153.0 | 284 |
| 8513 S / 11 GF | 25.646.4153.0 | 285 |
| 8513 S / 11 W | 25.647.1153.0 | 284 |
| 8513 S / 11 WF | 25.647.4153.0 | 285 |
| 8513 S / 12 G | 25.646.1253.0 | 284 |
| 8513 S / 12 G F | 25.646.4253.0 | 285 |
| 8513 S / 12 W | 25.647.1253.0 | 284 |
| 8513 S / 12 W F | 25.647.4253.0 | 285 |
| 8513 S / 13 G | 25.646.1353.0 | 284 |
| 8513 S / 13 GF | 25.646.4353.0 | 285 |
| 8513 S / 13 WF | 25.647.4353.0 | 285 |
| 8513 S / 14 G | 25.646.1453.0 | 284 |
| 8513 S / 14 GF | 25.646.4453.0 | 285 |
| 8513 S / 14 W | 25.647.1453.0 | 284 |
| 8513 S / 14 WF | 25.647.4453.0 | 285 |
| 8513 S / 15 G | 25.646.1553.0 | 284 |
| 8513 S / 15 GF | 25.646.4553.0 | 285 |
| 8513 S / 15 W | 25.647.1553.0 | 284 |
| 8513 S / 15 WF | 25.647.4553.0 | 285 |
| 8513 S / 16 G | 25.646.1653.0 | 284 |
| 8513 S / 16 GF | 25.646.4653.0 | 285 |
| 8513 S / 16 W | 25.647.1653.0 | 284 |
| 8513 S / 16 WF | 25.647.4653.0 | 285 |
| 8513 SUFK / 2 OB | 25.642.3253.0 | 281 |
| 8513 SUFK / 3 OB | 25.642.3353.0 | 281 |
| 8513 SUFK / 4 OB | 25.642.3453.0 | 281 |
| 8513 SUFK / 5 OB | 25.642.3553.0 | 281 |
| 8513 SUFK / 6 OB | 25.642.3653.0 | 281 |
| 8513 SUFK / 7 OB | 25.642.3753.0 | 281 |
| 8513 SUFK / 8 OB | 25.642.3853.0 | 281 |
| 8513 SUFK / 9 OB | 25.642.3953.0 | 281 |
| 8513 SUFK / 10 OB | 25.642.4053.0 | 281 |
| 8513 SUFK / 11 OB | 25.642.4153.0 | 281 |
| 8513 SUFK / 12 | 25.642.1253.0 | 281 |
| 8513 SUFK / 12 OB | 25.642.4253.0 | 281 |
| 8520 B / 2 OB | 25.470.0253.0 | 324 |
| 8520 B / 3 | 25.470.3353.0 | 324 |
| 8520 B / 3 OB | 25.470.0353.0 | 324 |
| 8520 B / 4 OB | 25.470.0453.0 | 324 |
| 8520 B / 5 OB | 25.470.0553.0 | 324 |
| 8520 B / 6 OB | 25.470.0653.0 | 324 |
| 8520 B / 7 | 25.470.3753.0 | 324 |
| 8520 B / 7 OB | 25.470.0753.0 | 324 |
| 8520 B / 8 | 25.470.3853.0 | 324 |
| 8520 B / 8 OB | 25.470.0853.0 | 324 |
| 8520 B / 9 OB | 25.470.0953.0 | 324 |
| 8520 B / 10 OB | 25.470.1053.0 | 324 |
| 8520 B / 11 | 25.470.4153.0 | 324 |
| 8520 B / 11 OB | 25.470.1153.0 | 324 |
| 8520 B / 12 OB | 25.470.1253.0 | 324 |
| 8520 B / 13 | 25.470.4353.0 | 324 |
| 8520 B / 13 OB | 25.470.1353.0 | 324 |
| 8520 B / 14 | 25.470.4453.0 | 324 |
| 8520 B / 14 OB | 25.470.1453.0 | 324 |
| 8520 B / 15 | 25.470.4553.0 | 324 |
| 8520 B / 15 OB | 25.470.1553.0 | 324 |
| 8520 B / 16 | 25.470.4653.0 | 324 |
| 8520 B / 16 OB | 25.470.1653.0 | 324 |
| 8520 BL / 2 W OB | 25.471.0253.0 | 325 |
| 8520 BL / 3 G OB | 25.472.0353.0 | 325 |
| 8520 BL / 3 W OB | 25.471.0353.0 | 325 |
| 8520 BL / 4 G OB | 25.472.0453.0 | 325 |
| 8520 BL / 6 G OB | 25.472.0653.0 | 325 |
| 8520 BL / 6 W | 25.471.3653.0 | 325 |
| 8520 BL / 7 G | 25.472.3753.0 | 325 |
| 8520 BL / 7 G OB | 25.472.0753.0 | 325 |
| 8520 BL / 7 W | 25.471.3753.0 | 325 |

# contents


| Type | Part no. | section / page |
|---|---|---|
| 8520 BL / 7 W OB | 25.471.0753.0 | 325 |
| 8520 BL / 11 G | 25.472.4153.0 | 325 |
| 8520 BL / 11 G OB | 25.472.1153.0 | 325 |
| 8520 BL / 11 W | 25.471.4153.0 | 325 |
| 8520 BL / 11 W OB | 25.471.1153.0 | 325 |
| 8520 BL / 13 G | 25.472.4353.0 | 325 |
| 8520 BL / 13 G OB | 25.472.1353.0 | 325 |
| 8520 BL / 13 W | 25.471.4353.0 | 325 |
| 8520 BL / 13 W OB | 25.471.1353.0 | 325 |
| 8520 BL / 14 G | 25.472.4453.0 | 325 |
| 8520 BL / 14 G OB | 25.472.1453.0 | 325 |
| 8520 BL / 14 W | 25.471.4453.0 | 325 |
| 8520 BL / 14 W OB | 25.471.1453.0 | 325 |
| 8520 BL / 15 G | 25.472.4553.0 | 325 |
| 8520 BL / 15 G OB | 25.472.1553.0 | 325 |
| 8520 BL / 15 W | 25.471.4553.0 | 325 |
| 8520 BL / 15 W OB | 25.471.1553.0 | 325 |
| 8520 BL / 16 G | 25.472.4653.0 | 325 |
| 8520 BL / 16 W | 25.471.4653.0 | 325 |
| 8520 S / 2 G 0,8 | Z5.535.0225.0 | 324 |
| 8520 S / 2 G 1,0 | Z5.535.3225.0 | 324 |
| 8520 S / 3 G 0,8 | Z5.535.0325.0 | 324 |
| 8520 S / 3 G 1,0 | Z5.535.3325.0 | 324 |
| 8520 S / 4 G 0,8 | Z5.535.0425.0 | 324 |
| 8520 S / 4 G 1,0 | Z5.535.3425.0 | 324 |
| 8520 S / 5 G 0,8 | Z5.535.0525.0 | 324 |
| 8520 S / 5 G 1,0 | Z5.535.3525.0 | 324 |
| 8520 S / 6 G 0,8 | Z5.535.0625.0 | 324 |
| 8520 S / 6 G 1,0 | Z5.535.3625.0 | 324 |
| 8520 S / 7 G 0,8 | Z5.535.0725.0 | 324 |
| 8520 S / 7 G 1,0 | Z5.535.3725.0 | 324 |
| 8520 S / 8 G 0,8 | Z5.535.0825.0 | 324 |
| 8520 S / 8 G 1.0 | Z5.535.3825.0 | 324 |
| 8520 S / 10 G 0,8 | Z5.535.1025.0 | 324 |
| 8520 S / 10 G 1,0 | Z5.535.4025.0 | 324 |
| 8520 S / 11 G 0,8 | Z5.535.1125.0 | 324 |
| 8520 S / 11 G 1,0 | Z5.535.4125.0 | 324 |
| 8520 S / 12 G 0,8 | Z5.535.1225.0 | 324 |
| 8520 S / 12 G 1,0 | Z5.535.4225.0 | 324 |
| 8520 S / 13 G 0,8 | Z5.535.1325.0 | 324 |
| 8520 S / 13 G 1,0 | Z5.535.4325.0 | 324 |
| 8520 S / 14 G 0,8 | Z5.535.1425.0 | 324 |
| 8520 S / 14 G 1,0 | Z5.535.4425.0 | 324 |
| 8520 S / 15 G 0,8 | Z5.535.1525.0 | 324 |
| 8520 S / 15 G 1,0 | Z5.535.4525.0 | 324 |
| 8520 S / 16 G 0,8 | Z5.535.1625.0 | 324 |
| 8520 S / 16 G 1,0 | Z5.535.4625.0 | 324 |
| 8543 / 2 | 25.600.5253.0 | 316 |
| 8543 / 2 OB | 25.602.5253.0 | 316 |
| 8543 / 3 | 25.600.5353.0 | 316 |
| 8543 / 3 OB | 25.602.5353.0 | 316 |
| 8543 / 4 | 25.600.5453.0 | 316 |
| 8543 / 4 OB | 25.602.5453.0 | 316 |
| 8543 / 5 | 25.600.5553.0 | 316 |
| 8543 / 5 OB | 25.602.5553.0 | 316 |
| 8543 / 6 | 25.600.5653.0 | 316 |
| 8543 / 6 OB | 25.602.5653.0 | 316 |
| 8543 / 7 | 25.600.5753.0 | 316 |
| 8543 / 7 OB | 25.602.5753.0 | 316 |
| 8543 / 8 | 25.600.5853.0 | 316 |
| 8543 / 8 OB | 25.602.5853.0 | 316 |
| 8543 / 9 | 25.600.5953.0 | 316 |
| 8543 / 9 OB | 25.602.5953.0 | 316 |
| 8543 / 10 | 25.600.6053.0 | 316 |
| 8543 / 10 OB | 25.602.6053.0 | 316 |
| 8543 / 11 | 25.600.6153.0 | 316 |
| 8543 / 11 OB | 25.602.6153.0 | 316 |
| 8543 / 12 | 25.600.6253.0 | 316 |
| 8543 / 12 OB | 25.602.6253.0 | 316 |
| 8543 / 13 | 25.600.6353.0 | 316 |
| 8543 / 13 OB | 25.602.6353.0 | 316 |
| 8543 / 14 | 25.600.6453.0 | 316 |
| 8543 / 14 OB | 25.602.6453.0 | 316 |
| 8543 / 15 | 25.600.6553.0 | 316 |
| 8543 / 15 OB | 25.602.6553.0 | 316 |
| 8543 / 16 | 25.600.6653.0 | 316 |
| 8543 / 16 OB | 25.602.6653.0 | 316 |
| 8591 V/ 10/40 VB1 OB | 25.154.7053.0 | 373 |
| 8593 / 2 | 25.194.0253.0 | 336 |
| 8593 / 2 OB | 25.195.0253.0 | 336 |
| 8593 / 2 ZN | 25.194.9253.0 | 336 |
| 8593 / 2 ZN OB | 25.195.9253.0 | 336 |
| 8593 / 3 | 25.194.0353.0 | 336 |
| 8593 / 3 OB | 25.195.0353.0 | 336 |
| 8593 / 3 ZN | 25.194.9353.0 | 336 |
| 8593 / 3 ZN OB | 25.195.9353.0 | 336 |
| 8593 / 4 | 25.194.0453.0 | 336 |
| 8593 / 4 OB | 25.195.0453.0 | 336 |
| 8593 / 5 | 25.194.0553.0 | 336 |
| 8593 / 5 OB | 25.195.0553.0 | 336 |
| 8593 / 6 | 25.194.0653.0 | 336 |
| 8593 / 6 OB | 25.195.0653.0 | 336 |
| 8593 / 7 | 25.194.0753.0 | 336 |
| 8593 / 7 OB | 25.195.0753.0 | 336 |
| 8593 / 8 | 25.194.0853.0 | 336 |
| 8593 / 8 OB | 25.195.0853.0 | 336 |
| 8593 / 9 | 25.194.0953.0 | 336 |
| 8593 / 9 OB | 25.195.0953.0 | 336 |
| 8593 / 10 | 25.194.1053.0 | 336 |
| 8593 / 10 OB | 25.195.1053.0 | 336 |
| 8593 / 11 | 25.194.1153.0 | 336 |
| 8593 / 11 OB | 25.195.1153.0 | 336 |
| 8593 / 12 | 25.194.1253.0 | 336 |
| 8593 / 12 OB | 25.195.1253.0 | 336 |
| 8593 / 13 | 25.194.1353.0 | 336 |
| 8593 / 13 OB | 25.195.1353.0 | 336 |
| 8593 / 14 | 25.194.1453.0 | 336 |
| 8593 / 14 OB | 25.195.1453.0 | 336 |
| 8593 / 15 | 25.194.1553.0 | 336 |
| 8593 / 15 OB | 25.195.1553.0 | 336 |
| 8593 / 16 | 25.194.1653.0 | 336 |
| 8593 / 16 OB | 25.195.1653.0 | 336 |
| 8813 B / 2 | 25.620.0253.0 | 280 |
| 8813 B / 2 F | 25.621.0253.0 | 280 |
| 8813 B / 2 F OB | 25.621.3253.0 | 280 |
| 8813 B / 2 OB | 25.620.3253.0 | 280 |
| 8813 B / 2 VL | 25.624.0253.0 | 282 |
| 8813 B / 2 VL F | 25.625.0253.0 | 283 |
| 8813 B / 2 VL F OB | 25.625.3253.0 | 283 |
| 8813 B / 2 VL OB | 25.624.3253.0 | 282 |
| 8813 B / 2 VR | 25.622.0253.0 | 282 |
| 8813 B / 2 VR F | 25.623.0253.0 | 283 |
| 8813 B / 2 VR F OB | 25.623.3253.0 | 283 |
| 8813 B / 2 VR OB | 25.622.3253.0 | 282 |
| 8813 B / 3 | 25.620.0353.0 | 280 |
| 8813 B / 3 F | 25.621.0353.0 | 280 |
| 8813 B / 3 F OB | 25.621.3353.0 | 280 |
| 8813 B / 3 OB | 25.620.3353.0 | 280 |
| 8813 B / 3 VL | 25.624.0353.0 | 282 |
| 8813 B / 3 VL F | 25.625.0353.0 | 283 |
| 8813 B / 3 VL F OB | 25.625.3353.0 | 283 |
| 8813 B / 3 VL OB | 25.624.3353.0 | 282 |
| 8813 B / 3 VR F | 25.623.0353.0 | 283 |
| 8813 B / 3 VR F OB | 25.623.3353.0 | 283 |
| 8813 B / 3 VR OB | 25.622.3353.0 | 282 |
| 8813 B / 4 | 25.620.0453.0 | 280 |
| 8813 B / 4 F | 25.621.0453.0 | 280 |
| 8813 B / 4 F OB | 25.621.3453.0 | 280 |
| 8813 B / 4 OB | 25.620.3453.0 | 280 |
| 8813 B / 4 VL | 25.624.0453.0 | 282 |
| 8813 B / 4 VL F | 25.625.0453.0 | 283 |
| 8813 B / 4 VL F OB | 25.625.3453.0 | 283 |
| 8813 B / 4 VL OB | 25.624.3453.0 | 282 |
| 8813 B / 4 VR F | 25.623.0453.0 | 283 |
| 8813 B / 4 VR F OB | 25.623.3453.0 | 283 |
| 8813 B / 4 VR OB | 25.622.3453.0 | 282 |
| 8813 B / 5 | 25.620.0553.0 | 280 |
| 8813 B / 5 F | 25.621.0553.0 | 280 |
| 8813 B / 5 F OB | 25.621.3553.0 | 280 |
| 8813 B / 5 OB | 25.620.3553.0 | 280 |
| 8813 B / 5 VL | 25.624.0553.0 | 282 |
| 8813 B / 5 VL F | 25.625.0553.0 | 283 |
| 8813 B / 5 VL F OB | 25.625.3553.0 | 283 |
| 8813 B / 5 VL OB | 25.624.3553.0 | 282 |
| 8813 B / 5 VR F | 25.623.0553.0 | 283 |
| 8813 B / 5 VR F OB | 25.623.3553.0 | 283 |
| 8813 B / 5 VR OB | 25.622.3553.0 | 282 |
| 8813 B / 6 | 25.620.0653.0 | 280 |
| 8813 B / 6 F | 25.621.0653.0 | 280 |
| 8813 B / 6 F OB | 25.621.3653.0 | 280 |
| 8813 B / 6 OB | 25.620.3653.0 | 280 |
| 8813 B / 6 VL | 25.624.0653.0 | 282 |
| 8813 B / 6 VL F | 25.625.0653.0 | 283 |
| 8813 B / 6 VL F OB | 25.625.3653.0 | 283 |
| 8813 B / 6 VL OB | 25.624.3653.0 | 282 |
| 8813 B / 6 VR | 25.622.0653.0 | 282 |
| 8813 B / 6 VR F | 25.623.0653.0 | 283 |
| 8813 B / 6 VR F OB | 25.623.3653.0 | 283 |
| 8813 B / 6 VR OB | 25.622.3653.0 | 282 |
| 8813 B / 7 | 25.620.0753.0 | 280 |
| 8813 B / 7 F | 25.621.0753.0 | 280 |
| 8813 B / 7 F OB | 25.621.3753.0 | 280 |
| 8813 B / 7 OB | 25.620.3753.0 | 280 |
| 8813 B / 7 VL | 25.624.0753.0 | 282 |
| 8813 B / 7 VL F | 25.625.0753.0 | 283 |
| 8813 B / 7 VL F OB | 25.625.3753.0 | 283 |
| 8813 B / 7 VL OB | 25.624.3753.0 | 282 |
| 8813 B / 7 VR F | 25.623.0753.0 | 283 |
| 8813 B / 7 VR F OB | 25.623.3753.0 | 283 |
| 8813 B / 7 VR OB | 25.622.3753.0 | 282 |
| 8813 B / 8 | 25.620.0853.0 | 280 |
| 8813 B / 8 F | 25.621.0853.0 | 280 |
| 8813 B / 8 F OB | 25.621.3853.0 | 280 |
| 8813 B / 8 OB | 25.620.3853.0 | 280 |
| 8813 B / 8 VL | 25.624.0853.0 | 282 |
| 8813 B / 8 VL F | 25.625.0853.0 | 283 |
| 8813 B / 8 VL F OB | 25.625.3853.0 | 283 |
| 8813 B / 8 VL OB | 25.624.3853.0 | 282 |
| 8813 B / 8 VR | 25.622.0853.0 | 282 |
| 8813 B / 8 VR F | 25.623.0853.0 | 283 |
| 8813 B / 8 VR F OB | 25.623.3853.0 | 283 |
| 8813 B / 8 VR OB | 25.622.3853.0 | 282 |
| 8813 B / 9 | 25.620.0953.0 | 280 |
| 8813 B / 9 F | 25.621.0953.0 | 280 |
| 8813 B / 9 F OB | 25.621.3953.0 | 280 |
| 8813 B / 9 OB | 25.620.3953.0 | 280 |
| 8813 B / 9 VL | 25.624.0953.0 | 282 |
| 8813 B / 9 VL F | 25.625.0953.0 | 283 |
| 8813 B / 9 VL F OB | 25.625.3953.0 | 283 |
| 8813 B / 9 VL OB | 25.624.3953.0 | 282 |
| 8813 B / 9 VR F | 25.623.0953.0 | 283 |
| 8813 B / 9 VR F OB | 25.623.3953.0 | 283 |
| 8813 B / 9 VR OB | 25.622.3953.0 | 282 |
| 8813 B / 10 | 25.620.1053.0 | 280 |
| 8813 B / 10 F | 25.621.1053.0 | 280 |
| 8813 B / 10 F OB | 25.621.4053.0 | 280 |
| 8813 B / 10 OB | 25.620.4053.0 | 280 |
| 8813 B / 10 VL | 25.624.1053.0 | 282 |
| 8813 B / 10 VL F | 25.625.1053.0 | 283 |
| 8813 B / 10 VL F OB | 25.625.4053.0 | 283 |
| 8813 B / 10 VL OB | 25.624.4053.0 | 282 |
| 8813 B / 10 VR | 25.622.1053.0 | 282 |
| 8813 B / 10 VR F | 25.623.1053.0 | 283 |
| 8813 B / 10 VR F OB | 25.623.4053.0 | 283 |
| 8813 B / 10 VR OB | 25.622.4053.0 | 282 |
| 8813 B / 11 | 25.620.1153.0 | 280 |
| 8813 B / 11 F | 25.621.1153.0 | 280 |
| 8813 B / 11 F OB | 25.621.4153.0 | 280 |
| 8813 B / 11 OB | 25.620.4153.0 | 280 |
| 8813 B / 11 VL | 25.624.1153.0 | 282 |
| 8813 B / 11 VL F | 25.625.1153.0 | 283 |
| 8813 B / 11 VL F OB | 25.625.4153.0 | 283 |
| 8813 B / 11 VL OB | 25.624.4153.0 | 282 |
| 8813 B / 11 VR | 25.622.1153.0 | 282 |
| 8813 B / 11 VR F | 25.623.1153.0 | 283 |
| 8813 B / 11 VR F OB | 25.623.4153.0 | 283 |
| 8813 B / 11 VR OB | 25.622.4153.0 | 282 |
| 8813 B / 12 | 25.620.1253.0 | 280 |
| 8813 B / 12 F | 25.621.1253.0 | 280 |
| 8813 B / 12 F OB | 25.621.4253.0 | 280 |
| 8813 B / 12 OB | 25.620.4253.0 | 280 |
| 8813 B / 12 VL | 25.624.1253.0 | 282 |
| 8813 B / 12 VL F | 25.625.1253.0 | 283 |
| 8813 B / 12 VL F OB | 25.625.4253.0 | 283 |
| 8813 B / 12 VL OB | 25.624.4253.0 | 282 |
| 8813 B / 12 VR | 25.622.1253.0 | 282 |
| 8813 B / 12 VR F | 25.623.1253.0 | 283 |
| 8813 B / 12 VR F OB | 25.623.4253.0 | 283 |
| 8813 B / 12 VR OB | 25.622.4253.0 | 282 |
| 8813 B / 13 | 25.620.1353.0 | 280 |
| 8813 B / 13 F | 25.621.1353.0 | 280 |
| 8813 B / 13 F OB | 25.621.4353.0 | 280 |
| 8813 B / 13 OB | 25.620.4353.0 | 280 |
| 8813 B / 13 VL | 25.624.1353.0 | 282 |
| 8813 B / 13 VL F | 25.625.1353.0 | 283 |
| 8813 B / 13 VL F OB | 25.625.4353.0 | 283 |
| 8813 B / 13 VL OB | 25.624.4353.0 | 282 |
| 8813 B / 13 VR | 25.622.1353.0 | 282 |
| 8813 B / 13 VR F | 25.623.1353.0 | 283 |
| 8813 B / 13 VR F OB | 25.623.4353.0 | 283 |
| 8813 B / 14 | 25.620.1453.0 | 280 |
| 8813 B / 14 F | 25.621.1453.0 | 280 |
| 8813 B / 14 F OB | 25.621.4453.0 | 280 |
| 8813 B / 14 OB | 25.620.4453.0 | 280 |
| 8813 B / 14 VL | 25.624.1453.0 | 282 |
| 8813 B / 14 VL F | 25.625.1453.0 | 283 |
| 8813 B / 14 VL F OB | 25.625.4453.0 | 283 |
| 8813 B / 14 VL OB | 25.624.4453.0 | 282 |
| 8813 B / 14 VR | 25.622.1453.0 | 282 |
| 8813 B / 14 VR F | 25.623.1453.0 | 283 |
| 8813 B / 14 VR F OB | 25.623.4453.0 | 283 |
| 8813 B / 14 VR OB | 25.622.4453.0 | 282 |
| 8813 B / 15 | 25.620.1553.0 | 280 |
| 8813 B / 15 F | 25.621.1553.0 | 280 |
| 8813 B / 15 F OB | 25.621.4553.0 | 280 |
| 8813 B / 15 OB | 25.620.4553.0 | 280 |
| 8813 B / 15 VL | 25.624.1553.0 | 282 |
| 8813 B / 15 VL F | 25.625.1553.0 | 283 |
| 8813 B / 15 VL F OB | 25.625.4553.0 | 283 |
| 8813 B / 15 VL OB | 25.624.4553.0 | 282 |
| 8813 B / 15 VR | 25.622.1553.0 | 282 |
| 8813 B / 15 VR F | 25.623.1553.0 | 283 |
| 8813 B / 15 VR F OB | 25.623.4553.0 | 283 |
| 8813 B / 15 VR OB | 25.622.4553.0 | 282 |
| 8813 B / 16 | 25.620.1653.0 | 280 |
| 8813 B / 16 F | 25.621.1653.0 | 280 |
| 8813 B / 16 F OB | 25.621.4653.0 | 280 |
| 8813 B / 16 OB | 25.620.4653.0 | 280 |
| 8813 B / 16 VL | 25.624.1653.0 | 282 |
| 8813 B / 16 VL F | 25.625.1653.0 | 283 |
| 8813 B / 16 VL F OB | 25.625.4653.0 | 283 |
| 8813 B / 16 VL OB | 25.624.4653.0 | 282 |
| 8813 B / 16 VR | 25.622.1653.0 | 282 |
| 8813 B / 16 VR F OB | 25.623.4653.0 | 283 |
| 8813 B / 16 VR OB | 25.622.4653.0 | 282 |
| 8813 B / 3 VR | 25.622.0353.0 | 282 |
| 8813 B / 4 VR | 25.622.0453.0 | 282 |
| 8813 B / 7 VR | 25.622.0753.0 | 282 |
| 8813 B / 9 VR | 25.622.0953.0 | 282 |
| 8813 B/ 5 VR | 25.622.0553.0 | 282 |
| 8813 S / 2 G | 25.626.0253.0 | 284 |
| 8813 S / 2 GF | 25.626.3253.0 | 285 |
| 8813 S / 2 W | 25.627.0253.0 | 284 |
| 8813 S / 2 WF | 25.627.3253.0 | 285 |
| 8813 S / 3 G | 25.626.0353.0 | 284 |
| 8813 S / 3 GF | 25.626.3353.0 | 285 |
| 8813 S / 3 W | 25.627.0353.0 | 284 |
| 8813 S / 3 WF | 25.627.3353.0 | 285 |
| 8813 S / 4 G | 25.626.0453.0 | 284 |
| 8813 S / 4 GF | 25.626.3453.0 | 285 |
| 8813 S / 4 W | 25.627.0453.0 | 284 |
| 8813 S / 4 WF | 25.627.3453.0 | 285 |
| 8813 S / 5 G | 25.626.0553.0 | 284 |
| 8813 S / 5 GF | 25.626.3553.0 | 285 |
| 8813 S / 5 W | 25.627.0553.0 | 284 |
| 8813 S / 5 WF | 25.627.3553.0 | 285 |
| 8813 S / 6 G | 25.626.0653.0 | 284 |
| 8813 S / 6 GF | 25.626.3653.0 | 285 |
| 8813 S / 6 W | 25.627.0653.0 | 284 |
| 8813 S / 6 WF | 25.627.3653.0 | 285 |
| 8813 S / 7 G | 25.626.0753.0 | 284 |
| 8813 S / 7 GF | 25.626.3753.0 | 285 |
| 8813 S / 7 W | 25.627.0753.0 | 284 |
| 8813 S / 7 WF | 25.627.3753.0 | 285 |
| 8813 S / 8 G | 25.626.0853.0 | 284 |
| 8813 S / 8 GF | 25.626.3853.0 | 285 |
| 8813 S / 8 W | 25.627.0853.0 | 284 |
| 8813 S / 8 WF | 25.627.3853.0 | 285 |
| 8813 S / 9 G | 25.626.0953.0 | 284 |
| 8813 S / 9 GF | 25.626.3953.0 | 285 |
| 8813 S / 9 W | 25.627.0953.0 | 284 |

# contents of
# type description

# contents TYPE


| Type | Part no. | section / page |
|---|---|---|
| 8813 S / 9 WF | 25.627.3953.0 | 285 |
| 8813 S / 10 G | 25.626.1053.0 | 284 |
| 8813 S / 10 GF | 25.626.4053.0 | 285 |
| 8813 S / 10 W | 25.627.1053.0 | 284 |
| 8813 S / 10 WF | 25.627.4053.0 | 285 |
| 8813 S / 11 G | 25.626.1153.0 | 284 |
| 8813 S / 11 GF | 25.626.4153.0 | 285 |
| 8813 S / 11 W | 25.627.1153.0 | 284 |
| 8813 S / 11 WF | 25.627.4153.0 | 285 |
| 8813 S / 12 G | 25.626.1253.0 | 284 |
| 8813 S / 12 GF | 25.626.4253.0 | 285 |
| 8813 S / 12 W | 25.627.1253.0 | 284 |
| 8813 S / 12 WF | 25.627.4253.0 | 285 |
| 8813 S / 13 G | 25.626.1353.0 | 284 |
| 8813 S / 13 GF | 25.626.4353.0 | 285 |
| 8813 S / 13 W | 25.627.1353.0 | 284 |
| 8813 S / 13 WF | 25.627.4353.0 | 285 |
| 8813 S / 14 G | 25.626.1453.0 | 284 |
| 8813 S / 14 GF | 25.626.4453.0 | 285 |
| 8813 S / 14 W | 25.627.1453.0 | 284 |
| 8813 S / 14 WF | 25.627.4453.0 | 285 |
| 8813 S / 15 G | 25.626.1553.0 | 284 |
| 8813 S / 15 GF | 25.626.4553.0 | 285 |
| 8813 S / 15 W | 25.627.1553.0 | 284 |
| 8813 S / 15 WF | 25.627.4553.0 | 285 |
| 8813 S / 16 G | 25.626.1653.0 | 284 |
| 8813 S / 16 GF | 25.626.4653.0 | 285 |
| 8813 S / 16 W | 25.627.1653.0 | 284 |
| 8813 S / 16 WF | 25.627.4653.0 | 285 |
| 8813B / 13 VR OB | 25.622.4353.0 | 282 |
| 8893 / 11 | 25.196.1153.0 | 336 |
| 8893 / 13 | 25.196.1353.0 | 336 |
| 8893 / 14 | 25.196.1453.0 | 336 |
| 8893 / 15 | 25.196.1553.0 | 336 |
| 8893 / 2 OB | 25.197.0253.0 | 336 |
| 8893 / 2 ZN | 25.196.9253.0 | 336 |
| 8893 / 2 ZN OB | 25.197.9253.0 | 336 |
| 8893 / 3 | 25.196.0353.0 | 336 |
| 8893 / 3 OB | 25.197.0353.0 | 336 |
| 8893 / 3 ZN | 25.196.9353.0 | 336 |
| 8893 / 3 ZN OB | 25.197.9353.0 | 336 |
| 8893 / 4 | 25.196.0453.0 | 336 |
| 8893 / 4 OB | 25.197.0453.0 | 336 |
| 8893 / 5 | 25.196.0553.0 | 336 |
| 8893 / 5 OB | 25.197.0553.0 | 336 |
| 8893 / 6 | 25.196.0653.0 | 336 |
| 8893 / 6 OB | 25.197.0653.0 | 336 |
| 8893 / 7 | 25.196.0753.0 | 336 |
| 8893 / 7 OB | 25.197.0753.0 | 336 |
| 8893 / 8 | 25.196.0853.0 | 336 |
| 8893 / 8 OB | 25.197.0853.0 | 336 |
| 8893 / 9 | 25.196.0953.0 | 336 |
| 8893 / 9 OB | 25.197.0953.0 | 336 |
| 8893 / 10 | 25.196.1053.0 | 336 |
| 8893 / 10 OB | 25.197.1053.0 | 336 |
| 8893 / 11 OB | 25.197.1153.0 | 336 |
| 8893 / 12 | 25.196.1253.0 | 336 |
| 8893 / 12 OB | 25.197.1253.0 | 336 |
| 8893 / 13 OB | 25.197.1353.0 | 336 |
| 8893 / 14 OB | 25.197.1453.0 | 336 |
| 8893 / 15 OB | 25.197.1553.0 | 336 |
| 8893 / 16 | 25.196.1653.0 | 336 |
| 8893 / 16 OB | 25.197.1653.0 | 336 |
| 8893 / 2 | 25.196.0253.0 | 336 |
| 9003 C | 04.241.0651.0 | 584 |
| 9003 C / 4 | 04.242.1050.0 | 394 |
| 9003 C / 4 | 04.242.1050.0 | 584 |
| 9003 C B | 04.841.0651.0 | 584 |
| 9006 EN 60715 - G 32 | 98.190.0000.0 | 802 |
| 9006 EN 60715 - G 32 | 98.190.0000.0 | 584 |
| 9006 EN 60715 - G 32 | 98.190.0000.0 | 102 |
| 9006 AL 32 | 98.210.0000.0 | 802 |
| 9006 AL 32 | 98.210.0000.0 | 171 |
| 9006 CU EN 60715 - G 32 | 98.220.0000.0 | 110 |
| 9006 CU EN 60715 - G 32 | 98.220.0000.0 | 802 |
| 9006 GELOCHT | 98.190.1000.0 | 171 |
| 9006 GELOCHT | 98.190.1000.0 | 802 |
| 9011 A | 05.508.3121.0 | 191 |
| 9011 B | 05.508.3221.0 | 101 |
| 9011 C | 05.508.8821.0 | 176 |
| 9011 D | 05.508.8921.0 | 176 |
| 9012 | Z7.269.0723.0 | 197 |
| 9012 / 2.5 UB | Z7.269.0623.0 | 161 |
| 9012 / 6 | Z7.269.0523.0 | 197 |
| 9018 D | Z5.516.2511.0 | 169 |
| 9018 H | Z5.516.2711.0 | 169 |
| 9018 N | Z5.516.2811.0 | 169 |
| 9021/15X5,5EN60715 | 98.090.0000.0 | 802 |
| 9021/15X5,5EN60715 | 98.090.0000.0 | 171 |
| 9021/15X5,5EN60715 | 98.090.0015.0 | 40 |
| 9021/15X5,5EN60715 | 98.090.0015.0 | 802 |
| 9208 / S15 | Z5.522.7553.0 | 40 |
| 9215 - 2 | Z7.210.3227.0 | 114 |
| 9215 - 3 | Z7.210.3327.0 | 114 |
| 9215 - 4 | Z7.210.3427.0 | 164 |
| 9215 - 5 | Z7.210.3527.0 | 164 |
| 9215 - 6 | Z7.210.3627.0 | 114 |
| 9215 M-70 | Z7.210.3027.0 | 164 |
| 9222 | Z5.522.5010.0 | 40 |
| 9290 L | 59.900.2052.0 | 220 |
| 9290 L BLAU | 59.900.2053.6 | 220 |
| 9290 S | 59.900.2552.0 | 220 |
| 9526826 | 99.243.3564.7 | 385 |
| 9526832 | 99.239.3564.7 | 385 |
| 9526833 | 99.259.3564.7 | 385 |
| 9700 / 10 E / 1 | Z2.302.1321.0 | 211 |
| 9700 A / 5 S35 | 54.003.7553.0 | 189 |
| 9700 A / 5 S35 BLAU | 54.003.7553.6 | 189 |
| 9700 A / 6 ETK S35 | 54.004.7753.0 | 189 |
| 9700 A / 6 S35 | 54.004.7553.0 | 189 |
| 9700 A / 6 S35 BLAU | 54.004.7553.6 | 190 |
| 9700 A / 6 SL 2 S35 | 56.004.9053.0 | 189 |
| 9700 A / 8 ETK S35 | 54.010.7753.0 | 189 |
| 9700 A / 8 S35 | 54.010.7553.0 | 189 |
| 9700 A / 8 S35 BLAU | 54.010.7553.6 | 191 |
| 9700 A / 8 SL 2 S35 | 56.010.9053.0 | 189 |
| 9700 A / 10 ETK S35 | 54.016.7753.0 | 189 |
| 9700 A / 10 S35 | 54.016.7553.0 | 189 |
| 9700 A / 10 S35 BLAU | 54.016.7553.6 | 191 |
| 9700 A / 10 SL 2 S35 | 56.016.9053.0 | 189 |
| 9700 A / 12 S35 | 54.025.7553.0 | 191 |
| 9700 A / 12 S35 BLAU | 54.025.7553.6 | 191 |
| 9700 A / 16 PEN2 S35 | 56.035.9453.0 | 195 |
| 9700 A / 16 S35 | 54.035.7553.0 | 189 |
| 9700 A / 16 S35 BLAU | 54.035.7553.6 | 189 |
| 9700 A / 16 SL 2 S35 | 56.035.9053.0 | 189 |
| 9700 A / 35 E S35 | Z2.302.0621.0 | 111 |
| 9700 B/30 SI E14/S32/V0 | 54.904.4055.0 | 129 |
| 9700 B/30 SI E14/S35/V0 | 56.904.4055.0 | 128 |
| 9700 B/30 SI E18/S32/V0 | 54.925.4055.0 | 129 |
| 9700 B/30 SI E18/S35/V0 | 56.925.4055.0 | 128 |
| 9701 / 6 | 07.310.3153.0 | 190 |
| 9701 / 6 BLAU | 07.310.3153.6 | 190 |
| 9701 / 6 ETK L | 07.310.4553.0 | 193 |
| 9701 / 6 SL | 07.312.0053.0 | 194 |
| 9701 / 8 | 07.310.3253.0 | 191 |
| 9701 / 8 BLAU | 07.310.3253.6 | 191 |
| 9701 / 8 SL | 07.312.0153.0 | 194 |
| 9701 / 10 | 07.310.3953.0 | 191 |
| 9701 / 10 BLAU | 07.310.3953.6 | 191 |
| 9701 / 10 SL | 07.312.0253.0 | 195 |
| 9701 / 12 | 07.310.3353.0 | 191 |
| 9701 / 12 BLAU | 07.310.3353.6 | 191 |
| 9701 / 16 SL | 07.312.0353.0 | 189 |
| 9701 A SH S35 | 01.112.1453.0 | 193 |
| 9701 A/6 1S KO TP 2/V0 | 07.310.5855.0 | 141 |
| 9701 B / 8 ETK | 07.310.5253.0 | 193 |
| 9701 B / 10 ETK | 07.310.5353.0 | 193 |
| 9702 / 6 | 07.310.3453.0 | 190 |
| 9702 / 6 BLAU | 07.310.3453.6 | 190 |
| 9702 / 8 | 07.310.3553.0 | 191 |
| 9702 / 8 BLAU | 07.310.3553.6 | 191 |
| 9702 / 10 | 07.310.4053.0 | 191 |
| 9702 / 10 BLAU | 07.310.4053.6 | 191 |
| 9702 / 12 | 07.310.3653.0 | 191 |
| 9702 / 12 BLAU | 07.310.3653.6 | 191 |
| 9703 / 5 M | Z7.215.0027.0 | 190 |
| 9703 / 5- 2 | Z7.215.0227.0 | 189 |
| 9703 / 5- 3 | Z7.215.0327.0 | 190 |
| 9703 / 5- 4 | Z7.215.0427.0 | 190 |
| 9703 / 5- 5 | Z7.215.0527.0 | 190 |
| 9703 / 5- 6 | Z7.215.0627.0 | 190 |
| 9703 / 6 M-70 | Z7.211.0027.0 | 72 |
| 9703 / 6- 2 | Z7.211.0227.0 | 72 |
| 9703 / 6- 3 | Z7.211.0327.0 | 86 |
| 9703 / 6- 4 | Z7.211.0427.0 | 86 |
| 9703 / 6- 5 | Z7.211.0527.0 | 86 |
| 9703 / 6- 6 | Z7.211.0627.0 | 72 |
| 9703 / 8 M-50 | Z7.212.0027.0 | 196 |
| 9703 / 8- 2 | Z7.212.0227.0 | 191 |
| 9703 / 8- 3 | Z7.212.0327.0 | 191 |
| 9703 / 8- 4 | Z7.212.0427.0 | 191 |
| 9703 / 8- 5 | Z7.212.0527.0 | 191 |
| 9703 / 8- 6 | Z7.212.0627.0 | 191 |
| 9703 / 10 M | Z7.214.0027.0 | 196 |
| 9703 / 10- 2 | Z7.214.0227.0 | 189 |
| 9703 / 10- 3 | Z7.214.0327.0 | 191 |
| 9703 / 10- 4 | Z7.214.0427.0 | 191 |
| 9703 / 10- 5 | Z7.214.0527.0 | 191 |
| 9703 / 10- 6 | Z7.214.0627.0 | 191 |
| 9703 / 12 M | Z7.213.0027.0 | 196 |
| 9703 / 12- 2 | Z7.213.0227.0 | 191 |
| 9703 / 12- 3 | Z7.213.0327.0 | 191 |
| 9703 / 12- 4 | Z7.213.0427.0 | 191 |
| 9703 / 12- 5 | Z7.213.0527.0 | 191 |
| 9703 / 12- 6 | Z7.213.0627.0 | 191 |
| 9703 / 16 M | Z7.216.0027.0 | 196 |
| 9703 / 16- 2 | Z7.216.0227.0 | 189 |
| 9703 / 16- 3 | Z7.216.0327.0 | 192 |
| 9703 / 16- 4 | Z7.216.0427.0 | 192 |
| 9703 / 16- 5 | Z7.216.0527.0 | 192 |
| 9703 / 16- 6 | Z7.216.0627.0 | 192 |
| 9704 A | 04.241.1150.0 | 598 |
| 9704 A | 04.241.1150.0 | 791 |
| 9704 A | 04.241.1150.0 | 181 |
| 9704 A / 0 B | 04.841.2050.0 | 791 |
| 9704 A / 0 B | 04.841.2050.0 | 598 |
| 9704 A / 0 B | 04.841.2050.0 | 395 |
| 9704 A / 0 B | 04.841.2050.0 | 181 |
| 9704 A / 1 B | 04.841.1150.0 | 598 |
| 9704 A / 1 B | 04.841.1150.0 | 791 |
| 9704 A / 1 B | 04.841.1150.0 | 181 |
| 9704 A / 1 B | 04.841.1150.0 | 395 |
| 9704 A / 1-0 B | 04.841.2150.0 | 598 |
| 9704 A / 1-0 B | 04.841.2150.0 | 181 |
| 9704 A / 1-0 B | 04.841.2150.0 | 791 |
| 9704 A / 1-0 B | 04.841.2150.0 | 349 |
| 9704 A / 2 B | 04.841.1250.0 | 181 |
| 9704 A / 2 B | 04.841.1250.0 | 395 |
| 9704 A / 2 B | 04.841.1250.0 | 598 |
| 9704 A / 2 B | 04.841.1250.0 | 791 |
| 9704 A / 3 B | 04.841.1350.0 | 791 |
| 9704 A / 3 B | 04.841.1350.0 | 598 |
| 9704 A / 3 B | 04.841.1350.0 | 395 |
| 9704 A / 3 B | 04.841.1350.0 | 181 |
| 9704 A / 4 B | 04.841.1450.0 | 598 |
| 9704 A / 4 B | 04.841.1450.0 | 791 |
| 9704 A / 4 B | 04.841.1450.0 | 395 |
| 9704 A / 4 B | 04.841.1450.0 | 181 |
| 9704 A / 5 B | 04.841.1550.0 | 395 |
| 9704 A / 5 B | 04.841.1550.0 | 181 |
| 9704 A / 5 B | 04.841.1550.0 | 598 |
| 9704 A / 5 B | 04.841.1550.0 | 791 |
| 9704 A / 6 B | 04.841.1650.0 | 598 |
| 9704 A / 6 B | 04.841.1650.0 | 791 |
| 9704 A / 6 B | 04.841.1650.0 | 181 |
| 9704 A / 6 B | 04.841.1650.0 | 395 |
| 9704 A / 7 B | 04.841.1750.0 | 181 |
| 9704 A / 7 B | 04.841.1750.0 | 598 |
| 9704 A / 7 B | 04.841.1750.0 | 791 |
| 9704 A / 7 B | 04.841.1750.0 | 395 |
| 9704 A / 8 B | 04.841.1850.0 | 791 |
| 9704 A / 8 B | 04.841.1850.0 | 181 |
| 9704 A / 8 B | 04.841.1850.0 | 598 |
| 9704 A / 8 B | 04.841.1850.0 | 395 |
| 9704 A / 9 B | 04.841.1950.0 | 181 |
| 9704 A / 9 B | 04.841.1950.0 | 598 |
| 9704 A / 9 B | 04.841.1950.0 | 791 |
| 9704 A / 9 B | 04.841.1950.0 | 395 |
| 9704 A /+ B | 04.841.7450.0 | 395 |
| 9704 A /+ B | 04.841.7450.0 | 599 |
| 9704 A /+ B | 04.841.7450.0 | 181 |
| 9704 A /+ B | 04.841.7450.0 | 791 |
| 9704 A /- B | 04.841.7550.0 | 181 |
| 9704 A /- B | 04.841.7550.0 | 599 |
| 9704 A /- B | 04.841.7550.0 | 791 |
| 9704 A /- B | 04.841.7550.0 | 395 |
| 9704 A /. B | 04.841.7750.0 | 791 |
| 9704 A /. B | 04.841.7750.0 | 181 |
| 9704 A /. B | 04.841.7750.0 | 599 |
| 9704 A /. B | 04.841.7750.0 | 395 |
| 9704 A // B | 04.841.7650.0 | 181 |
| 9704 A // B | 04.841.7650.0 | 599 |
| 9704 A // B | 04.841.7650.0 | 395 |
| 9704 A // B | 04.841.7650.0 | 791 |
| 9704 A /AG B | 04.841.2250.0 | 395 |
| 9704 A /AG B | 04.841.2250.0 | 598 |
| 9704 A /AG B | 04.841.2250.0 | 791 |
| 9704 A /AK B | 04.841.4850.0 | 599 |
| 9704 A /AK B | 04.841.4850.0 | 395 |
| 9704 A /AK B | 04.841.4850.0 | 791 |
| 9704 A /BG B | 04.841.2350.0 | 598 |
| 9704 A /BG B | 04.841.2350.0 | 791 |
| 9704 A /BG B | 04.841.2350.0 | 395 |
| 9704 A /BK B | 04.841.4950.0 | 395 |
| 9704 A /BK B | 04.841.4950.0 | 791 |
| 9704 A /BK B | 04.841.4950.0 | 599 |
| 9704 A /CG B | 04.841.2450.0 | 395 |
| 9704 A /CG B | 04.841.2450.0 | 791 |
| 9704 A /CG B | 04.841.2450.0 | 598 |
| 9704 A /CK B | 04.841.5050.0 | 395 |
| 9704 A /CK B | 04.841.5050.0 | 599 |
| 9704 A /CK B | 04.841.5050.0 | 791 |
| 9704 A /DG B | 04.841.2550.0 | 598 |
| 9704 A /DG B | 04.841.2550.0 | 791 |
| 9704 A /DG B | 04.841.2550.0 | 395 |
| 9704 A /DK B | 04.841.5150.0 | 599 |
| 9704 A /DK B | 04.841.5150.0 | 791 |
| 9704 A /DK B | 04.841.5150.0 | 395 |
| 9704 A /EG B | 04.841.2650.0 | 791 |
| 9704 A /EG B | 04.841.2650.0 | 395 |
| 9704 A /EG B | 04.841.2650.0 | 598 |
| 9704 A /EK B | 04.841.5250.0 | 791 |
| 9704 A /EK B | 04.841.5250.0 | 599 |
| 9704 A /EK B | 04.841.5250.0 | 395 |
| 9704 A /FG B | 04.841.2750.0 | 598 |
| 9704 A /FG B | 04.841.2750.0 | 791 |
| 9704 A /FG B | 04.841.2750.0 | 395 |
| 9704 A /FK B | 04.841.5350.0 | 791 |
| 9704 A /FK B | 04.841.5350.0 | 599 |
| 9704 A /FK B | 04.841.5350.0 | 395 |
| 9704 A /GG B | 04.841.2850.0 | 598 |
| 9704 A /GG B | 04.841.2850.0 | 791 |
| 9704 A /GG B | 04.841.2850.0 | 395 |
| 9704 A /GK B | 04.841.5450.0 | 791 |
| 9704 A /GK B | 04.841.5450.0 | 395 |
| 9704 A /GK B | 04.841.5450.0 | 599 |
| 9704 A /HG B | 04.841.2950.0 | 791 |
| 9704 A /HG B | 04.841.2950.0 | 598 |
| 9704 A /HG B | 04.841.2950.0 | 395 |
| 9704 A /HK B | 04.841.5550.0 | 395 |
| 9704 A /HK B | 04.841.5550.0 | 599 |
| 9704 A /HK B | 04.841.5550.0 | 791 |
| 9704 A /IG B | 04.841.3050.0 | 791 |
| 9704 A /IG B | 04.841.3050.0 | 598 |
| 9704 A /IG B | 04.841.3050.0 | 395 |
| 9704 A /IK B | 04.841.5650.0 | 791 |
| 9704 A /IK B | 04.841.5650.0 | 395 |
| 9704 A /IK B | 04.841.5650.0 | 599 |
| 9704 A /JG B | 04.841.3150.0 | 395 |
| 9704 A /JG B | 04.841.3150.0 | 598 |
| 9704 A /JG B | 04.841.3150.0 | 791 |
| 9704 A /JK B | 04.841.5750.0 | 395 |
| 9704 A /JK B | 04.841.5750.0 | 791 |
| 9704 A /KG B | 04.841.3250.0 | 791 |
| 9704 A /KG B | 04.841.3250.0 | 598 |
| 9704 A /KG B | 04.841.3250.0 | 395 |
| 9704 A /KK B | 04.841.5850.0 | 395 |
| 9704 A /KK B | 04.841.5850.0 | 791 |
| 9704 A /LG B | 04.841.3350.0 | 791 |
| 9704 A /LG B | 04.841.3350.0 | 598 |

# contents


| Type | Part no. | section / page |
|---|---|---|
| 9704 A /LG B | 04.841.3350.0 | 395 |
| 9704 A /LK B | 04.841.5950.0 | 395 |
| 9704 A /LK B | 04.841.5950.0 | 791 |
| 9704 A /MG B | 04.841.3450.0 | 791 |
| 9704 A /MG B | 04.841.3450.0 | 395 |
| 9704 A /MG B | 04.841.3450.0 | 598 |
| 9704 A /MK B | 04.841.6050.0 | 599 |
| 9704 A /MK B | 04.841.6050.0 | 791 |
| 9704 A /MK B | 04.841.6050.0 | 395 |
| 9704 A /NG B | 04.841.3550.0 | 791 |
| 9704 A /NG B | 04.841.3550.0 | 395 |
| 9704 A /NG B | 04.841.3550.0 | 598 |
| 9704 A /NK B | 04.841.6150.0 | 395 |
| 9704 A /NK B | 04.841.6150.0 | 791 |
| 9704 A /NK B | 04.841.6150.0 | 599 |
| 9704 A /OG B | 04.841.3650.0 | 598 |
| 9704 A /OG B | 04.841.3650.0 | 791 |
| 9704 A /OG B | 04.841.3650.0 | 395 |
| 9704 A /OK B | 04.841.6250.0 | 599 |
| 9704 A /OK B | 04.841.6250.0 | 395 |
| 9704 A /OK B | 04.841.6250.0 | 791 |
| 9704 A /PG B | 04.841.3750.0 | 395 |
| 9704 A /PG B | 04.841.3750.0 | 791 |
| 9704 A /PG B | 04.841.3750.0 | 598 |
| 9704 A /PK B | 04.841.6350.0 | 395 |
| 9704 A /PK B | 04.841.6350.0 | 791 |
| 9704 A /PK B | 04.841.6350.0 | 599 |
| 9704 A /QG B | 04.841.3850.0 | 598 |
| 9704 A /QG B | 04.841.3850.0 | 791 |
| 9704 A /QG B | 04.841.3850.0 | 395 |
| 9704 A /QK B | 04.841.6450.0 | 791 |
| 9704 A /QK B | 04.841.6450.0 | 395 |
| 9704 A /QK B | 04.841.6450.0 | 599 |
| 9704 A /RG B | 04.841.3950.0 | 395 |
| 9704 A /RG B | 04.841.3950.0 | 598 |
| 9704 A /RG B | 04.841.3950.0 | 791 |
| 9704 A /RK B | 04.841.6550.0 | 395 |
| 9704 A /RK B | 04.841.6550.0 | 791 |
| 9704 A /RK B | 04.841.6550.0 | 599 |
| 9704 A /SG B | 04.841.4050.0 | 791 |
| 9704 A /SG B | 04.841.4050.0 | 598 |
| 9704 A /SG B | 04.841.4050.0 | 395 |
| 9704 A /SK B | 04.841.6650.0 | 395 |
| 9704 A /SK B | 04.841.6650.0 | 791 |
| 9704 A /SK B | 04.841.6650.0 | 599 |
| 9704 A /TG B | 04.841.4150.0 | 598 |
| 9704 A /TG B | 04.841.4150.0 | 395 |
| 9704 A /TG B | 04.841.4150.0 | 791 |
| 9704 A /TK B | 04.841.6750.0 | 791 |
| 9704 A /TK B | 04.841.6750.0 | 395 |
| 9704 A /TK B | 04.841.6750.0 | 599 |
| 9704 A /UG B | 04.841.4250.0 | 395 |
| 9704 A /UG B | 04.841.4250.0 | 598 |
| 9704 A /UG B | 04.841.4250.0 | 791 |
| 9704 A /UK B | 04.841.6850.0 | 791 |
| 9704 A /UK B | 04.841.6850.0 | 395 |
| 9704 A /UK B | 04.841.6850.0 | 599 |
| 9704 A /VG B | 04.841.4350.0 | 598 |
| 9704 A /VG B | 04.841.4350.0 | 791 |
| 9704 A /VG B | 04.841.4350.0 | 395 |
| 9704 A /VK B | 04.841.6950.0 | 791 |
| 9704 A /VK B | 04.841.6950.0 | 395 |
| 9704 A /VK B | 04.841.6950.0 | 599 |
| 9704 A /WG B | 04.841.4450.0 | 395 |
| 9704 A /WG B | 04.841.4450.0 | 791 |
| 9704 A /WG B | 04.841.4450.0 | 598 |
| 9704 A /WK B | 04.841.7050.0 | 599 |
| 9704 A /WK B | 04.841.7050.0 | 395 |
| 9704 A /WK B | 04.841.7050.0 | 791 |
| 9704 A /XG B | 04.841.4550.0 | 395 |
| 9704 A /XG B | 04.841.4550.0 | 598 |
| 9704 A /XG B | 04.841.4550.0 | 791 |
| 9704 A /XK B | 04.841.7150.0 | 395 |
| 9704 A /XK B | 04.841.7150.0 | 791 |
| 9704 A /XK B | 04.841.7150.0 | 599 |
| 9704 A /YG B | 04.841.4650.0 | 598 |
| 9704 A /YG B | 04.841.4650.0 | 791 |
| 9704 A /YG B | 04.841.4650.0 | 395 |
| 9704 A /YK B | 04.841.7250.0 | 395 |
| 9704 A /YK B | 04.841.7250.0 | 599 |
| 9704 A /YK B | 04.841.7250.0 | 791 |
| 9704 A /ZG B | 04.841.4750.0 | 395 |
| 9704 A /ZG B | 04.841.4750.0 | 791 |
| 9704 A /ZG B | 04.841.4750.0 | 598 |
| 9704 A /ZK B | 04.841.7350.0 | 599 |
| 9704 A /ZK B | 04.841.7350.0 | 791 |
| 9704 A /ZK B | 04.841.7350.0 | 395 |
| 9705 A | 04.242.0850.0 | 588 |
| 9705 A | 04.242.0850.0 | 321 |
| 9705 A | 04.242.0850.0 | 90 |
| 9705 A | 04.242.0850.0 | 790 |
| 9705 A / 4 W | 04.242.2853.0 | 790 |
| 9705 A / 5 / 10 | 04.242.5053.0 | 349 |
| 9705 A / 5 / 10 | 04.242.5053.0 | 91 |
| 9705 A / 5 / 10 | 04.242.5053.0 | 596 |
| 9705 A / 5 / 10 | 04.242.5053.0 | 790 |
| 9705 A / 5 / 10 / 5 B | 04.842.5553.0 | 596 |
| 9705 A / 5 / 10 / 5 B | 04.842.5553.0 | 394 |
| 9705 A / 5 / 10 / 5 B | 04.842.5553.0 | 55 |
| 9705 A / 5 / 10 B | 04.842.5053.0 | 790 |
| 9705 A / 5 / 10 B | 04.842.5053.0 | 55 |
| 9705 A / 5 / 10 B | 04.842.5053.0 | 349 |
| 9705 A / 5 / 10 B | 04.842.5053.0 | 596 |
| 9705 A / 5 /10/11MARCOM | Z4.242.5053.0 | 49 |
| 9705 A / 6 / 10 | 04.242.6053.0 | 91 |
| 9705 A / 6 / 10 / 5 B | 04.842.6553.0 | 69 |
| 9705 A / 6 / 10 B | 04.842.6053.0 | 69 |
| 9705 A / 6 /10/11MARCOM | Z4.242.6053.0 | 49 |
| 9705 A / 6,7/6-90GRAD | 04.242.3053.0 | 790 |
| 9705 A / 6,7/6-90GRAD 5 | 04.242.3453.0 | 790 |
| 9705 A / 6,7/6-90GRAD 8 | 04.242.3553.0 | 790 |
| 9705 A / 6,7/6-90GRAD12 | 04.242.3653.0 | 790 |
| 9705 A / 6.7/9-90GRAD 3 | 04.242.3353.0 | 790 |
| 9705 A / 7,5 / 10 | 04.242.7553.0 | 351 |
| 9705 A / 7,5 / 10 B | 04.842.7553.0 | 351 |
| 9705 A / 8 / 10 | 04.242.8053.0 | 201 |
| 9705 A / 8 / 10 / 5 B | 04.842.8553.0 | 91 |
| 9705 A / 8 / 10 B | 04.842.8053.0 | 189 |
| 9705 A B | 04.842.0850.0 | 588 |
| 9705 A B | 04.842.0850.0 | 90 |
| 9705 A B | 04.842.0850.0 | 321 |
| 9705 A B | 04.842.0850.0 | 790 |
| 9705 A L / 5/ 10 | 04.242.5153.0 | 596 |
| 9705 A L / 5/ 10 | 04.242.5153.0 | 790 |
| 9705 A L / 5/ 10 | 04.242.5153.0 | 394 |
| 9705 A L / 5/ 10 | 04.242.5153.0 | 91 |
| 9705 A L / 5/ 10 B | 04.842.5153.0 | 790 |
| 9705 A L / 6/ 10 | 04.242.6353.0 | 91 |
| 9705 AL | 04.242.1553.0 | 410 |
| 9705 AL | 04.242.1553.0 | 90 |
| 9705 AL | 04.242.1553.0 | 394 |
| 9705 AL | 04.242.1553.0 | 790 |
| 9705 AL B | 04.842.1553.0 | 394 |
| 9705 AL B | 04.842.1553.0 | 596 |
| 9705 AL B | 04.842.1553.0 | 790 |
| 9705 AL B | 04.842.1553.0 | 90 |
| 9705 AL/ 5 /10/ 6MARCOM | Z4.242.5153.0 | 442 |
| 9705 AL/ 5 /10/ 6MARCOM | Z4.242.5153.0 | 49 |
| 9705A/5/ 9 B 1- 9 | 04.842.4953.0 | 596 |
| 9705A/5/ 9 B 1- 9 | 04.842.4953.0 | 394 |
| 9705A/5/ 9 B 1- 9 | 04.842.4953.0 | 91 |
| 9705A/5/10 B 1- 10 | 04.845.0153.0 | 91 |
| 9705A/5/10 B 11- 20 | 04.845.0253.0 | 91 |
| 9705A/5/10 B 21- 30 | 04.845.0353.0 | 91 |
| 9705A/5/10 B 31- 40 | 04.845.0453.0 | 91 |
| 9705A/5/10 B 41- 50 | 04.845.0553.0 | 91 |
| 9705A/5/10 B 51- 60 | 04.845.0653.0 | 91 |
| 9705A/5/10 B 61- 70 | 04.845.0753.0 | 91 |
| 9705A/5/10 B 71- 80 | 04.845.0853.0 | 91 |
| 9705A/5/10 B 81- 90 | 04.845.0953.0 | 91 |
| 9705A/5/10 B 91-100 | 04.845.1053.0 | 91 |
| 9705A/5/10 B + | 04.855.0253.0 | 91 |
| 9705A/5/10 B + ROT | 04.855.0253.5 | 120 |
| 9705A/5/10 B - | 04.855.0353.0 | 91 |
| 9705A/5/10 B - BLAU | 04.855.0353.6 | 120 |
| 9705A/5/10B ERDZ | 04.855.0153.0 | 91 |
| 9705A/5/10B F1 | 04.855.0953.0 | 91 |
| 9705A/5/10B F2 | 04.855.1053.0 | 91 |
| 9705A/5/10B L1 | 04.855.0453.0 | 91 |
| 9705A/5/10B L1L2L3NPE.. | 04.855.0853.0 | 91 |
| 9705A/5/10B L2 | 04.855.0553.0 | 91 |
| 9705A/5/10B L3 | 04.855.0653.0 | 91 |
| 9705A/5/10B N | 04.855.3253.0 | 91 |
| 9705A/5/10B PE | 04.855.0753.0 | 91 |
| 9705A/5/10B SL | 04.855.3153.0 | 91 |
| 9705A/5/10B SLZ | 04.855.0053.0 | 91 |
| 9705A/6,7/ 12 | 04.242.6753.0 | 790 |
| 9705A/6,7/ 12 B | 04.842.6753.0 | 790 |
| 9705A/6,7/ 12 B 1- 9 | 99.000.0920.8 | 790 |
| 9705A/6,7/ 12 B 1-10 | 99.003.0920.8 | 790 |
| 9705A/6,7/2X 6 B 1- 6 | 99.002.0920.8 | 790 |
| 9705A/6,7/2X12 B 1-16 | 99.004.0920.8 | 790 |
| 9705A/6,7/2X12 B 1-24 | 99.005.0920.8 | 790 |
| 9705A/6/ 9 B 1- 9 | 04.842.5953.0 | 91 |
| 9705A/6/10 B 1- 10 | 04.846.0153.0 | 91 |
| 9705A/6/10 B 11- 20 | 04.846.0253.0 | 91 |
| 9705A/6/10 B 21- 30 | 04.846.0353.0 | 91 |
| 9705A/6/10 B 31- 40 | 04.846.0453.0 | 91 |
| 9705A/6/10 B 41- 50 | 04.846.0553.0 | 91 |
| 9705A/6/10 B 51- 60 | 04.846.0653.0 | 91 |
| 9705A/6/10 B 61- 70 | 04.846.0753.0 | 91 |
| 9705A/6/10 B 71- 80 | 04.846.0853.0 | 91 |
| 9705A/6/10 B 81- 90 | 04.846.0953.0 | 91 |
| 9705A/6/10 B 91-100 | 04.846.1053.0 | 91 |
| 9705A/6/10 B ERDZ | 04.856.0153.0 | 91 |
| 9705A/6/10 B L1 | 04.856.0453.0 | 19 |
| 9705A/6/10 B L2 | 04.856.0553.0 | 91 |
| 9705A/6/10 B L3 | 04.856.0653.0 | 91 |
| 9705A/6/10 B SLZ | 04.856.0053.0 | 91 |
| 9705A/6/10B + | 04.856.0253.0 | 91 |
| 9705A/6/10B - | 04.856.0353.0 | 91 |
| 9705A/6/10B F1 | 04.856.0953.0 | 91 |
| 9705A/6/10B F2 | 04.856.1053.0 | 91 |
| 9705A/6/10B L1L2L3NPE.. | 04.856.0853.0 | 91 |
| 9705A/6/10B N | 04.856.3253.0 | 91 |
| 9705A/6/10B PE | 04.856.0753.0 | 91 |
| 9705A/6/10B SL | 04.856.3153.0 | 91 |
| 9705A/8/ 9 B 1- 9 | 04.842.7953.0 | 201 |
| 9705A/8/10 B 1- 10 | 04.848.0153.0 | 201 |
| 9705A/8/10 B 11- 20 | 04.848.0253.0 | 201 |
| 9705A/8/10 B 21- 30 | 04.848.0353.0 | 201 |
| 9705A/8/10 B 31- 40 | 04.848.0453.0 | 201 |
| 9705A/8/10 B 41- 50 | 04.848.0553.0 | 201 |
| 9705A/8/10 B 51- 60 | 04.848.0653.0 | 201 |
| 9705A/8/10 B 61- 70 | 04.848.0753.0 | 201 |
| 9705A/8/10 B 71- 80 | 04.848.0853.0 | 201 |
| 9705A/8/10 B 81- 90 | 04.848.0953.0 | 201 |
| 9705A/8/10 B 91-100 | 04.848.1053.0 | 201 |
| 9705A/8/10B + | 04.858.0253.0 | 201 |
| 9705A/8/10B - | 04.858.0353.0 | 201 |
| 9705A/8/10B ERDZ | 04.858.0153.0 | 201 |
| 9705A/8/10B F1 | 04.858.0953.0 | 201 |
| 9705A/8/10B F2 | 04.858.1053.0 | 201 |
| 9705A/8/10B L1 | 04.858.0453.0 | 201 |
| 9705A/8/10B L1L2L3NPE.. | 04.858.0853.0 | 201 |
| 9705A/8/10B L2 | 04.858.0553.0 | 201 |
| 9705A/8/10B L3 | 04.858.0653.0 | 201 |
| 9705A/8/10B N | 04.858.3253.0 | 201 |
| 9705A/8/10B PE | 04.858.0753.0 | 201 |
| 9705A/8/10B SL | 04.858.3153.0 | 201 |
| 9705A/8/10B SLZ | 04.858.0053.0 | 201 |
| 9708 | Z5.522.7053.0 | 102 |
| 9708 / 2 S 35 | Z5.522.8553.0 | 19 |
| 9708 / 2 S 35 | Z5.522.8553.0 | 410 |
| 9708 / 2 S 35 | Z5.522.8553.0 | 308 |
| 9708 / 3 S35 | Z5.523.5153.0 | 173 |
| 9760 U/8 TKE 48 V/V0 | 57.110.1655.0 | 133 |
| 9760 U/8 TKE 220 V/V0 | 57.110.1555.0 | 133 |
| 9785U/1 KOHM-SPT/V0 | 57.904.4655.0 | 130 |
| 9785U/1 KOHM/V0 | 57.904.0655.0 | 130 |
| 9785U/10 KOHM-SPT/V0 | 57.904.4955.0 | 130 |
| 9785U/10 KOHM/V0 | 57.904.0955.0 | 130 |
| 9785U/10 OHM-SPT/V0 | 57.904.3955.0 | 130 |
| 9785U/10 OHM/V0 | 57.904.0055.0 | 130 |
| 9785U/100 OHM-SPT/V0 | 57.904.4355.0 | 130 |
| 9785U/100 OHM/V0 | 57.904.0355.0 | 130 |
| 9785U/2 KOHM-SPT/V0 | 57.904.4755.0 | 130 |
| 9785U/2 KOHM/V0 | 57.904.0755.0 | 130 |
| 9785U/20 KOHM-SPT/V0 | 57.904.5055.0 | 130 |
| 9785U/20 KOHM/V0 | 57.904.1055.0 | 130 |
| 9785U/20 OHM-SPT/V0 | 57.904.4155.0 | 130 |
| 9785U/20 OHM/V0 | 57.904.0155.0 | 130 |
| 9785U/200 OHM-SPT/V0 | 57.904.4455.0 | 130 |
| 9785U/200 OHM/V0 | 57.904.0455.0 | 130 |
| 9785U/5 KOHM-SPT/V0 | 57.904.4855.0 | 130 |
| 9785U/5 KOHM/V0 | 57.904.0855.0 | 130 |
| 9785U/50 KOHM-SPT/V0 | 57.904.5155.0 | 130 |
| 9785U/50 KOHM/V0 | 57.904.1155.0 | 130 |
| 9785U/50 OHM-SPT/V0 | 57.904.4255.0 | 130 |
| 9785U/50 OHM/V0 | 57.904.0255.0 | 130 |
| 9785U/500 OHM-SPT/V0 | 57.904.4555.0 | 130 |
| 9785U/500 OHM/V0 | 57.904.0555.0 | 130 |
| 9786U/12/V0 | 57.904.2055.0 | 131 |
| 9786U/TSK CU-CUNI/V0 | 57.904.7355.0 | 132 |
| 9786U/TSK E-CU-A-CU/V0 | 57.904.7455.0 | 132 |
| 9786U/TSK FE-CUNI/V0 | 57.904.7155.0 | 132 |
| 9786U/TSK NICR-CUNI/V0 | 57.904.7055.0 | 132 |
| 9786U/TSK NICR-NI/V0 | 57.904.7255.0 | 132 |
| 9813 M 10X 3 1000MM | 98.290.0000.0 | 72 |
| 9813 M SN 10X3 1000MM | 98.290.1000.0 | 24 |
| A BIS Z GB | 04.841.9150.0 | 791 |
| A BIS Z GB | 04.841.9150.0 | 395 |
| A BIS Z GB | 04.841.9150.0 | 181 |
| A BIS Z KB | 04.841.9250.0 | 395 |
| A BIS Z KB | 04.841.9250.0 | 181 |
| A BIS Z KB | 04.841.9250.0 | 791 |
| ABDECKG M WARNZCH | 04.343.5356.8 | 105 |
| ABDECKG M WARNZCH | 04.343.5456.8 | 105 |
| ABDECKG.M.WARNZCH | 04.325.1056.0 | 189 |
| ABDECKG.M.WARNZCH | 04.325.1156.0 | 189 |
| ABDECKG.M.WARNZCH | 04.325.1256.0 | 189 |
| ABDECKG.M.WARNZCH | 04.325.1356.0 | 191 |
| ABDECKG.M.WARNZCH | 04.325.1456.0 | 189 |
| ABDECKG.M.WARNZCH | 04.325.1656.0 | 189 |
| ABDECKG.M.WARNZCH | 04.343.4756.8 | 102 |
| ABDECKG.M.WARNZCH | 04.343.4856.8 | 69 |
| ABDECKG.M.WARNZCH | 04.343.4956.8 | 103 |
| ABDECKG.M.WARNZCH | 04.343.5056.8 | 103 |
| ABDECKG.M.WARNZCH | 04.343.5156.8 | 104 |
| ABDECKG.M.WARNZCH | 04.343.5256.8 | 105 |
| ABDECKG.M.WARNZCH | 04.343.9156.8 | 312 |
| ABDECKG.M.WARNZCH | 04.343.9156.8 | 134 |
| ABDECKPLATTE 10 | 07.416.6953.0 | 784 |
| ABDECKPLATTE 16 | 07.416.7053.0 | 784 |
| ABDECKPLATTE 24 | 07.416.7153.0 | 784 |
| ABDECKPLATTE 6 | 07.416.6853.0 | 784 |
| ABDECKSTREIFEN | 04.343.9056.8 | 312 |
| ABDECKSTREIFEN | 04.343.9056.8 | 134 |
| ABDECKUNG | 04.312.0554.0 | 584 |
| ABDECKUNG | 04.312.0654.0 | 584 |
| ABDECKUNG | 04.312.2056.0 | 125 |
| ABDECKUNG | 04.312.3054.0 | 585 |
| ABDECKUNG | 04.312.3254.0 | 587 |
| ABDECKUNG | 04.312.3354.0 | 585 |
| ABDECKUNG | 04.312.3454.0 | 586 |
| ABDECKUNG | 04.312.3554.0 | 587 |
| ABDECKUNG | 04.326.0056.0 | 152 |
| ABDECKUNG | 04.326.1053.0 | 128 |
| ABDECKUNG | 04.343.6853.8 | 308 |
| ABDECKUNG | 04.343.6853.8 | 36 |
| ABDECKUNG | 04.343.8353.8 | 33 |
| ABDECKUNG | Z7.409.5753.0 | 156 |
| ABDECKUNG | Z7.409.5853.0 | 158 |
| ABISOLIERZANGE | 95.350.0100.0 | 799 |
| ABSCHLUSSPL.M.BEZ | 07.340.4153.0 | 152 |
| ABSCHLUSSPL.M.BEZ | 07.340.4353.0 | 152 |
| ABSCHLUSSPLATTE | 07.310.8453.0 | 584 |
| ABSCHLUSSPLATTE | 07.310.8553.0 | 584 |
| ABSCHLUSSPLATTE | 07.310.9653.0 | 591 |
| AD VB 2,5 GELB | 04.326.2053.8 | 312 |
| AD VB 2,5 GELB | 04.326.2053.8 | 101 |
| AD VB 4 GELB | 04.326.2153.8 | 78 |
| AD VB 4 / 15 GELB | 04.326.2953.8 | 114 |
| AD VB 5 / 10 | 04.342.0556.0 | 120 |
| AD VB 5 / 10 GELB | 04.342.0556.8 | 116 |
| AD VB 5 / 10 P GELB | 04.342.3556.8 | 312 |
| AD VB 5 / 10 P GELB | 04.342.3556.8 | 102 |
| AD VB 6 / 10 E GELB | 04.342.2656.8 | 114 |
| AD VB 6 / 10 E P GELB | 04.342.5656.8 | 174 |
| AD VB 6 GELB | 04.326.2253.8 | 103 |
| AD VB 6/10 GELB | 04.342.0656.8 | 112 |

# contents of
# type description

# contents TYPE


| Type | Part no. | section / page |
|---|---|---|
| AD VB 6/10 P GELB | 04.342.3656.8 | 103 |
| AD VB 8/10 P GELB | 04.342.3856.8 | 103 |
| AD VB 10 GELB | 04.326.2353.8 | 82 |
| AD VB 10/10 GELB | 04.342.1056.8 | 78 |
| AD VB 10/10 P GELB | 04.342.4056.8 | 103 |
| AD VB 16 GELB | 04.326.2453.8 | 69 |
| AD VB 35 GELB | 04.326.2553.8 | 105 |
| AD VB 70 GELB | 04.326.2653.8 | 105 |
| AD VB WKM 2,5 / 15 GELB | 04.326.3053.8 | 144 |
| AD VM-1,5/8 SCHWARZ | 04.343.8053.0 | 45 |
| ADA.I.GEH. 3WR | 70.965.0353.4 | 671 |
| ADA.I.GEH.BU. 3WL | 70.960.0353.3 | 671 |
| ADA.I.GEH.BU. 3WL | 70.960.0353.4 | 671 |
| ADA.I.GEH.BU. 3WL | 71.960.0353.3 | 671 |
| ADA.I.GEH.BU. 3WL | 71.960.0353.4 | 671 |
| ADA.I.GEH.BU. 3WR | 70.965.0353.3 | 671 |
| ADA.I.GEH.BU. 3WR | 71.965.0353.3 | 671 |
| ADA.I.GEH.BU. 3WR | 71.965.0353.4 | 671 |
| ADA.I.GEH.BU. 6WL | 70.940.0653.3 | 667 |
| ADA.I.GEH.BU. 6WL | 70.960.0653.3 | 671 |
| ADA.I.GEH.BU. 6WL | 70.960.0653.4 | 671 |
| ADA.I.GEH.BU. 6WL | 71.960.0653.3 | 671 |
| ADA.I.GEH.BU. 6WL | 71.960.0653.4 | 671 |
| ADA.I.GEH.BU. 6WL | 72.940.0653.0 | 669 |
| ADA.I.GEH.BU. 6WR | 70.945.0653.3 | 667 |
| ADA.I.GEH.BU. 6WR | 70.945.0653.4 | 667 |
| ADA.I.GEH.BU. 6WR | 70.965.0653.3 | 671 |
| ADA.I.GEH.BU. 6WR | 70.965.0653.4 | 671 |
| ADA.I.GEH.BU. 6WR | 71.965.0653.4 | 671 |
| ADA.I.GEH.BU. 6WR | 72.945.0653.0 | 669 |
| ADA.I.GEH.BU.06WL | 70.940.0653.4 | 667 |
| ADA.I.GEH.BU.10WL | 70.940.1053.3 | 667 |
| ADA.I.GEH.BU.10WL | 70.940.1053.4 | 667 |
| ADA.I.GEH.BU.10WL | 70.960.1053.3 | 671 |
| ADA.I.GEH.BU.10WL | 70.960.1053.4 | 671 |
| ADA.I.GEH.BU.10WL | 70.965.1053.4 | 671 |
| ADA.I.GEH.BU.10WL | 71.940.1053.3 | 667 |
| ADA.I.GEH.BU.10WL | 71.940.1053.4 | 667 |
| ADA.I.GEH.BU.10WL | 71.960.1053.3 | 671 |
| ADA.I.GEH.BU.10WL | 71.960.1053.4 | 671 |
| ADA.I.GEH.BU.10WL | 72.940.1053.0 | 669 |
| ADA.I.GEH.BU.10WL | 77.940.1053.0 | 669 |
| ADA.I.GEH.BU.10WR | 70.945.1053.3 | 667 |
| ADA.I.GEH.BU.10WR | 70.945.1053.4 | 667 |
| ADA.I.GEH.BU.10WR | 70.965.1053.3 | 671 |
| ADA.I.GEH.BU.10WR | 71.945.1053.3 | 667 |
| ADA.I.GEH.BU.10WR | 71.945.1053.4 | 667 |
| ADA.I.GEH.BU.10WR | 71.965.1053.4 | 671 |
| ADA.I.GEH.BU.10WR | 72.945.1053.0 | 669 |
| ADA.I.GEH.BU.10WR | 77.945.1053.0 | 669 |
| ADA.I.GEH.BU.16WL | 70.940.1653.3 | 667 |
| ADA.I.GEH.BU.16WL | 70.940.1653.4 | 667 |
| ADA.I.GEH.BU.16WL | 71.940.1653.3 | 667 |
| ADA.I.GEH.BU.16WL | 71.940.1653.4 | 667 |
| ADA.I.GEH.BU.16WL | 72.940.1653.0 | 669 |
| ADA.I.GEH.BU.16WL | 77.940.1653.0 | 669 |
| ADA.I.GEH.BU.16WR | 70.945.1653.3 | 667 |
| ADA.I.GEH.BU.16WR | 70.945.1653.4 | 667 |
| ADA.I.GEH.BU.16WR | 71.945.1653.3 | 667 |
| ADA.I.GEH.BU.16WR | 71.945.1653.4 | 667 |
| ADA.I.GEH.BU.16WR | 72.945.1653.0 | 669 |
| ADA.I.GEH.BU.16WR | 77.945.1653.0 | 669 |
| ADA.I.GEH.BU.24WL | 70.940.2453.3 | 667 |
| ADA.I.GEH.BU.24WL | 70.940.2453.4 | 667 |
| ADA.I.GEH.BU.24WL | 71.940.2453.3 | 667 |
| ADA.I.GEH.BU.24WL | 71.940.2453.4 | 667 |
| ADA.I.GEH.BU.24WL | 72.940.2453.0 | 669 |
| ADA.I.GEH.BU.24WL | 77.940.2453.0 | 669 |
| ADA.I.GEH.BU.24WR | 70.945.2453.3 | 667 |
| ADA.I.GEH.BU.24WR | 70.945.2453.4 | 667 |
| ADA.I.GEH.BU.24WR | 71.945.2453.3 | 667 |
| ADA.I.GEH.BU.24WR | 71.945.2453.4 | 667 |
| ADA.I.GEH.BU.24WR | 72.945.2453.0 | 669 |
| ADA.I.GEH.BU.24WR | 77.945.2453.0 | 669 |
| ADA.I.GEH.ST. 3WL | 70.970.0353.3 | 671 |
| ADA.I.GEH.ST. 3WL | 71.970.0353.4 | 671 |
| ADA.I.GEH.ST. 3WR | 70.975.0353.3 | 671 |
| ADA.I.GEH.ST. 3WR | 70.975.0353.4 | 671 |
| ADA.I.GEH.ST. 3WR | 71.975.0353.4 | 671 |
| ADA.I.GEH.ST. 6WL | 70.950.0653.3 | 667 |
| ADA.I.GEH.ST. 6WL | 70.970.0653.3 | 671 |
| ADA.I.GEH.ST. 6WL | 70.970.0653.4 | 671 |
| ADA.I.GEH.ST. 6WL | 71.970.0653.3 | 671 |
| ADA.I.GEH.ST. 6WL | 71.970.0653.4 | 671 |
| ADA.I.GEH.ST. 6WL | 72.950.0653.0 | 669 |
| ADA.I.GEH.ST. 6WR | 70.955.0653.3 | 667 |
| ADA.I.GEH.ST. 6WR | 70.955.0653.4 | 667 |
| ADA.I.GEH.ST. 6WR | 70.975.0653.3 | 671 |
| ADA.I.GEH.ST. 6WR | 70.975.0653.4 | 671 |
| ADA.I.GEH.ST. 6WR | 71.975.0653.3 | 671 |
| ADA.I.GEH.ST. 6WR | 71.975.0653.4 | 671 |
| ADA.I.GEH.ST. 6WR | 72.955.0653.0 | 669 |
| ADA.I.GEH.ST.06WL | 70.950.0653.4 | 667 |
| ADA.I.GEH.ST.10WL | 70.950.1053.3 | 667 |
| ADA.I.GEH.ST.10WL | 70.950.1053.4 | 667 |
| ADA.I.GEH.ST.10WL | 70.970.1053.3 | 671 |
| ADA.I.GEH.ST.10WL | 70.970.1053.4 | 671 |
| ADA.I.GEH.ST.10WL | 71.950.1053.3 | 667 |
| ADA.I.GEH.ST.10WL | 71.950.1053.4 | 667 |
| ADA.I.GEH.ST.10WL | 71.970.1053.3 | 671 |
| ADA.I.GEH.ST.10WL | 71.970.1053.4 | 671 |
| ADA.I.GEH.ST.10WL | 72.950.1053.0 | 669 |
| ADA.I.GEH.ST.10WL | 77.950.1053.0 | 669 |
| ADA.I.GEH.ST.10WR | 70.955.1053.3 | 667 |
| ADA.I.GEH.ST.10WR | 70.955.1053.4 | 667 |
| ADA.I.GEH.ST.10WR | 70.975.1053.3 | 671 |
| ADA.I.GEH.ST.10WR | 70.975.1053.4 | 671 |

| Type | Part no. | section / page |
|---|---|---|
| ADA.I.GEH.ST.10WR | 71.955.1053.3 | 667 |
| ADA.I.GEH.ST.10WR | 71.955.1053.4 | 667 |
| ADA.I.GEH.ST.10WR | 71.975.1053.3 | 671 |
| ADA.I.GEH.ST.10WR | 71.975.1053.4 | 671 |
| ADA.I.GEH.ST.10WR | 72.955.1053.0 | 669 |
| ADA.I.GEH.ST.10WR | 77.955.1053.0 | 669 |
| ADA.I.GEH.ST.16WL | 70.950.1653.3 | 667 |
| ADA.I.GEH.ST.16WL | 70.950.1653.4 | 667 |
| ADA.I.GEH.ST.16WL | 71.950.1653.3 | 667 |
| ADA.I.GEH.ST.16WL | 71.950.1653.4 | 667 |
| ADA.I.GEH.ST.16WL | 72.950.1653.0 | 669 |
| ADA.I.GEH.ST.16WL | 77.950.1653.0 | 669 |
| ADA.I.GEH.ST.16WR | 70.955.1653.3 | 667 |
| ADA.I.GEH.ST.16WR | 70.955.1653.4 | 667 |
| ADA.I.GEH.ST.16WR | 71.955.1653.3 | 667 |
| ADA.I.GEH.ST.16WR | 71.955.1653.4 | 667 |
| ADA.I.GEH.ST.16WR | 72.955.1653.0 | 669 |
| ADA.I.GEH.ST.16WR | 72.955.1653.4 | 669 |
| ADA.I.GEH.ST.16WR | 77.955.1653.0 | 669 |
| ADA.I.GEH.ST.24WL | 70.950.2453.3 | 667 |
| ADA.I.GEH.ST.24WL | 70.950.2453.4 | 667 |
| ADA.I.GEH.ST.24WL | 71.950.2453.3 | 667 |
| ADA.I.GEH.ST.24WL | 71.950.2453.4 | 667 |
| ADA.I.GEH.ST.24WL | 72.950.2453.0 | 669 |
| ADA.I.GEH.ST.24WL | 77.950.2453.0 | 669 |
| ADA.I.GEH.ST.24WR | 70.955.2453.3 | 667 |
| ADA.I.GEH.ST.24WR | 70.955.2453.4 | 667 |
| ADA.I.GEH.ST.24WR | 71.955.2453.3 | 667 |
| ADA.I.GEH.ST.24WR | 71.955.2453.4 | 667 |
| ADA.I.GEH.ST.24WR | 72.955.2453.0 | 669 |
| ADA.I.GEH.ST.24WR | 77.955.2453.0 | 669 |
| ADA.I:GEH.ST. 3WL | 70.970.0353.4 | 671 |
| ADC 2,5 GELB | 04.344.0353.8 | 231 |
| ADF 2,5/4 GELB | 04.343.6053.8 | 308 |
| ADF 2,5/4 GELB | 04.343.6053.8 | 20 |
| ADF 4/4 GELB | 04.343.6153.8 | 19 |
| ADF 6/4 GELB | 04.343.6253.8 | 21 |
| ADF10/4 GELB | 04.343.6453.8 | 21 |
| ADF16/4 GELB | 04.343.6653.8 | 21 |
| AEI 1,5Z-N | 05.599.2027.0 | 797 |
| AKB 10 V / 20MA | 57.806.0053.0 | 504 |
| AKB 10 V /4-20MA | 57.806.1553.0 | 504 |
| AKB 20MA / 10 V | 57.806.0253.0 | 504 |
| AKB 4-20MA / 10 V | 57.806.0353.0 | 504 |
| AKT 10 V /4-20MA | 57.806.0953.0 | 505 |
| AKT 10 V / 20MA | 57.806.0653.0 | 505 |
| AKT 20MA / 10 V | 57.806.0753.0 | 505 |
| AKT 20MA / 20MA | 57.806.1153.0 | 505 |
| AKT 20MA /4-20MA | 57.806.1253.0 | 505 |
| AKT 0-10 V /-+10 V | 57.806.2653.0 | 505 |
| AKT 0-20MA /-+10 V | 57.806.2753.0 | 505 |
| AKT 4-20MA / 10 V | 57.806.0853.0 | 505 |
| AKT 4-20MA / 20MA | 57.806.1353.0 | 505 |
| AKT 4-20MA /-+10 V | 57.806.5553.0 | 505 |
| AKT +- 10 V /+-10 V | 57.806.1053.0 | 505 |
| AKT -+ 10 V /0-10 V | 57.806.2253.0 | 505 |
| AKT -+ 10 V /4-20MA | 57.806.2153.0 | 505 |
| AM 5 X 12 D 933SZMS | 06.065.0021.0 | 156 |
| ANKERSCHIENE 2M | 98.400.0000.0 | 210 |
| AP 2,5 - 4 /V0 | 07.311.0155.0 | 78 |
| AP 2,5 - 4 BL/V0 | 07.311.0155.6 | 78 |
| AP 2,5 U/8113 S/V /V0 | 07.312.1555.0 | 136 |
| AP 2,5 U/8113 S/V /V0 | 07.312.1555.0 | 310 |
| AP 4 TK /V0 | 07.311.6155.0 | 122 |
| AP 4 TK BL /V0 | 07.311.6155.6 | 123 |
| AP 6 /V0 | 07.311.0255.0 | 103 |
| AP 6 BL/V0 | 07.311.0255.6 | 103 |
| AP 1 - 2,5 | 07.312.5053.0 | 232 |
| AP 1 - 2,5 BLAU | 07.312.5053.6 | 232 |
| AP 1 - 2,5 GRUEN | 07.312.5053.7 | 233 |
| AP 10/SI /V0 | 07.311.4155.0 | 125 |
| AP 2,5 U/8113 S/V BL/V0 | 07.312.1555.6 | 137 |
| AP 2,5 U/D/8113 S/V/V0 | 07.311.9055.0 | 134 |
| AP 2,5 U/D/8113 S/V/V0 | 07.311.9055.0 | 312 |
| AP 2,5-4 KO/V0 | 07.310.9355.0 | 120 |
| AP 2,5U/8113../V0 | 07.312.4655.0 | 136 |
| AP 2,5U/8113../V0 | 07.312.4655.0 | 310 |
| AP 2,5U/8113S/H/V0 | 07.311.9855.0 | 311 |
| AP 3 S / IW/V0 | 07.311.4555.0 | 140 |
| AP 3 S/V0 | 07.311.4455.0 | 140 |
| AP 4 3S 1K / V0 | 07.311.3855.0 | 138 |
| AP 4 E /V0 | 07.311.4055.0 | 114 |
| AP 4 S / IW/V0 | 07.311.4355.0 | 141 |
| AP 4 S/V0 | 07.311.4255.0 | 141 |
| AP 4/D /V0 | 07.311.6355.0 | 112 |
| AP 4/D BL /V0 | 07.311.6355.6 | 112 |
| AP 5 S/V0 | 07.311.4655.0 | 139 |
| AP 8113 SE | 07.310.9853.0 | 303 |
| AP 8185 TOP N | 07.300.4753.0 | 349 |
| AP2,5U/D/8113 S/V BL/V0 | 07.311.9055.6 | 313 |
| AP4 /D1 /2 /V0 | 07.311.6455.0 | 112 |
| APC 1-2,5 D 2./E. BLAU | 07.312.5453.6 | 236 |
| APC 1-2,5 D 2./E. GRUEN | 07.312.5453.7 | 237 |
| APC 1-2,5 D./TK. | 07.312.5253.0 | 234 |
| APC 1-2,5 D./TK. BLAU | 07.312.5253.6 | 234 |
| APC 1-2,5 D./TK.GRUEN | 07.312.5253.7 | 235 |
| APC 1-2,5 D2./E. | 07.312.5453.0 | 231 |
| APF 1,5 E | 07.312.3553.0 | 33 |
| APF 2,5 - 4 | 07.312.2153.0 | 20 |
| APF 2,5 - 4 BLAU | 07.312.2153.6 | 20 |
| APF 2,5 - 4 GRUEN | 07.312.2153.7 | 22 |
| APF 2,5/D 1/2 | 07.312.2353.0 | 26 |
| APF 2,5/D 1/2 BLAU | 07.312.2353.6 | 26 |
| APF 2,5/D 1/2 GRUEN | 07.312.2353.7 | 28 |
| APF 2,5/D 2/2 | 07.312.2553.0 | 26 |
| APF 2,5/D 2/2 BLAU | 07.312.2553.6 | 26 |
| APF 2,5/D 2/2 GRUEN | 07.312.2553.7 | 28 |

| Type | Part no. | section / page |
|---|---|---|
| APF 2,5/D2 /8113 | 07.312.4153.0 | 308 |
| APF 2,5/D2 /8113 | 07.312.4153.0 | 36 |
| APF 2,5/d2/8113 BLAU | 07.312.4153.6 | 36 |
| APF 2,5/d2/8113 BLAU | 07.312.4153.6 | 308 |
| APF 4 E | 07.312.5753.0 | 30 |
| APF 4 E GRUEN | 07.312.5753.7 | 31 |
| APF 4 NT | 07.312.5653.0 | 24 |
| APF 4 TK | 07.312.2853.0 | 38 |
| APF 4 TK. | 07.312.4353.0 | 39 |
| APF4/D1/2 | 07.312.4853.0 | 27 |
| APF4/D1/2 BLAU | 07.312.4853.6 | 27 |
| APF4/D1/2 GRUEN | 07.312.4853.7 | 29 |
| API 10 - 16 BLAU/V0 | 07.311.9455.6 | 78 |
| API 10 - 16 SL/V0 | 07.311.9555.0 | 82 |
| API 10 - 16/V0 | 07.311.9455.0 | 78 |
| API 10-16 ETK/1/V0 | 07.312.1955.0 | 80 |
| API 35 BLAU/V0 | 07.311.8855.6 | 79 |
| API 35/V0 | 07.311.8855.0 | 79 |
| API 4/2/V0 | 07.311.6555.0 | 69 |
| API 4/3/V0 | 07.311.6855.0 | 74 |
| APIF 2,5 | 07.311.8353.0 | 58 |
| APM 2,5 - 4 / 15 | 07.311.0853.0 | 145 |
| APM 2,5 - 4 / 15 BLAU | 07.311.0853.6 | 145 |
| APM 2,5 F. / 15 | 07.311.0653.0 | 144 |
| APM 4 SL / 15 | 07.311.0753.0 | 145 |
| APN 4ETK /V0 | 07.312.1155.0 | 106 |
| APN 10 /V0 | 07.311.6655.0 | 103 |
| APN 10 BL/V0 | 07.311.6655.6 | 103 |
| APN 10ETK /V0 | 07.312.0955.0 | 106 |
| APN 16 /V0 | 07.311.6755.0 | 104 |
| APN 16 BL/V0 | 07.311.6755.6 | 104 |
| APN 16ETK /V0 | 07.312.0855.0 | 107 |
| APN2,5E | 07.312.1755.0 | 116 |
| AUSDRUECKWERKZEUG | 05.502.0200.0 | 207 |
| B EXP.BOARD WEG 6 POL | Z8.000.0123.1 | 592 |
| BEF.HALTER | 05.522.7356.0 | 331 |
| BEF.HALTER | 05.522.7756.0 | 331 |
| BEF.HALTER | 05.522.7856.0 | 331 |
| BEF.HALTER | 05.593.8853.0 | 331 |
| BEF.HALTER | 05.599.2853.0 | 331 |
| BEF.HALTER | 05.599.2953.0 | 331 |
| BEF.HALTER | Z5.523.2453.0 | 297 |
| BEF.HALTER | Z5.523.7753.0 | 295 |
| BEF.HALTER | Z5.523.7853.0 | 295 |
| BEFEST.HALT.KOMPL | Z5.523.7653.0 | 319 |
| BEZ.-SCHILD | 04.240.0953.0 | 392 |
| BEZ.BLATT PERF. | 04.019.0289.0 | 47 |
| BEZ.BLATT PERF. | 04.019.0889.0 | 183 |
| BEZ.KLAPPSCHILD | 04.210.0652.0 | 183 |
| BEZ.KLAPPSCHILD | 04.210.0752.0 | 183 |
| BEZ.KLAPPSCHILD | Z4.210.0652.0 | 183 |
| BEZ.KLAPPSCHILD | Z4.210.1652.0 | 183 |
| BEZ.PLATTE | 04.249.1053.0 | 499 |
| BEZ.PLATTE | 04.249.1553.0 | 499 |
| BEZ.PLATTE | 04.249.2053.0 | 499 |
| BEZ.PLATTE | 04.249.4053.0 | 499 |
| BEZ.PLATTE | 07.340.2153.0 | 152 |
| BEZ.PLATTE | 07.340.2353.0 | 152 |
| BEZ.SCHILDTRAEGER | 04.242.3853.0 | 781 |
| BEZ.SCHILDTRAEGER | 04.242.4253.0 | 349 |
| BEZ.SCHILDTRAEGER | 04.242.4453.0 | 781 |
| BEZ.SCHILDTRAEGER | 04.242.4653.0 | 357 |
| BEZ.SCHILDTRAEGER | 04.242.5853.0 | 349 |
| BEZ.SCHILDTRAEGER | Z4.242.3753.0 | 781 |
| BEZ.SCHILDTRAEGER | Z4.242.4053.0 | 781 |
| BEZEICHNUNGS-COMPUTER | 95.502.0000.0 | 90 |
| BGL-25VAC-2,5ADC | 81.000.1000.0 | 526 |
| BGL-40VAC-3ADC | 87.230.2053.0 | 526 |
| BK M 8 / 32 | 32.640.0042.0 | 152 |
| BK M 10 / 32 | 32.650.0042.0 | 153 |
| BK M 6 / 32 | 32.630.0042.0 | 152 |
| BU 70,3 /24 REV | Z5.570.1356.0 | 675 |
| BU 70.1 / 6 REV WL | Z5.572.0156.0 | 675 |
| BU 70.1 / 6 REV WR | Z5.572.1156.0 | 675 |
| BU 70.1 / 6 REV U WL | Z5.572.4156.0 | 675 |
| BU 70.1 / 6 REV U WR | Z5.572.5156.0 | 675 |
| BU 70.1 / 6 RV WL | Z5.572.2156.0 | 675 |
| BU 70.1 / 6 RV WR | Z5.572.3156.0 | 675 |
| BU 70.1 / 6 RV U WL | Z5.572.6156.0 | 675 |
| BU 70.1 / 6 RV U WR | Z5.572.7156.0 | 675 |
| BU 70.1 /10 REV WL | Z5.572.0256.0 | 675 |
| BU 70.1 /10 REV WR | Z5.572.1256.0 | 675 |
| BU 70.1 /10 REV U WL | Z5.572.4256.0 | 675 |
| BU 70.1 /10 REV U WR | Z5.572.5256.0 | 675 |
| BU 70.1 /10 RV WL | Z5.572.2256.0 | 675 |
| BU 70.1 /10 RV WR | Z5.572.3256.0 | 675 |
| BU 70.1 /10 RV U WL | Z5.572.6256.0 | 675 |
| BU 70.1 /10 RV U WR | Z5.572.7256.0 | 675 |
| BU 70.1 /16 REV WL | Z5.572.0056.0 | 675 |
| BU 70.1 /16 REV WR | Z5.572.1056.0 | 675 |
| BU 70.1 /16 REV U WL | Z5.572.4056.0 | 675 |
| BU 70.1 /16 REV U WR | Z5.572.5056.0 | 675 |
| BU 70.1 /16 RV WL | Z5.572.2056.0 | 675 |
| BU 70.1 /16 RV WR | Z5.572.3056.0 | 675 |
| BU 70.1 /16 RV U WL | Z5.572.6056.0 | 675 |
| BU 70.1 /16 RV U WR | Z5.572.7056.0 | 675 |
| BU 70.1 /24 REV WL | Z5.572.0356.0 | 675 |
| BU 70.1 /24 REV WR | Z5.572.1356.0 | 675 |
| BU 70.1 /24 REV U WL | Z5.572.4356.0 | 675 |
| BU 70.1 /24 REV U WR | Z5.572.5356.0 | 675 |
| BU 70.1 /24 RV WL | Z5.572.2356.0 | 675 |
| BU 70.1 /24 RV WR | Z5.572.3356.0 | 675 |
| BU 70.1 /24 RV U WL | Z5.572.6356.0 | 675 |
| BU 70.1 /24 RV U WR | Z5.572.7356.0 | 675 |
| BU 70.3 / 6 REV | Z5.570.1156.0 | 675 |
| BU 70.3 / 6 REVZ | Z5.570.0156.0 | 675 |
| BU 70.3 / 6 RV | Z5.570.3156.0 | 675 |

# contents


| Type | Part no. | section / page |
|---|---|---|
| BU 70.3 / 6 RVZ | Z5.570.2156.0 | 675 |
| BU 70.3 /10 REV | Z5.570.1256.0 | 675 |
| BU 70.3 /10 REVZ | Z5.570.0256.0 | 675 |
| BU 70.3 /10 RV | Z5.570.3256.0 | 675 |
| BU 70.3 /10 RVZ | Z5.570.2256.0 | 675 |
| BU 70.3 /16 REV | Z5.570.1056.0 | 675 |
| BU 70.3 /16 REVZ | Z5.570.0056.0 | 675 |
| BU 70.3 /16 RV | Z5.570.3056.0 | 675 |
| BU 70.3 /16 RVZ | Z5.570.2056.0 | 675 |
| BU 70.3 /24 REVZ | Z5.570.0356.0 | 675 |
| BU 70.3 /24 RV | Z5.570.3356.0 | 675 |
| BU 70.3 /24 RVZ | Z5.570.2356.0 | 675 |
| BU 70.7 / 6 REV | Z5.570.5156.0 | 677 |
| BU 70.7 / 6 REVZ | Z5.570.4156.0 | 677 |
| BU 70.7 / 6 RV | Z5.570.8656.0 | 677 |
| BU 70.7 / 6 RVZ | Z5.570.6656.0 | 677 |
| BU 70.7 /10 REV | Z5.570.5256.0 | 677 |
| BU 70.7 /10 REVZ | Z5.570.4256.0 | 677 |
| BU 70.7 /10 RV | Z5.570.8756.0 | 677 |
| BU 70.7 /10 RVZ | Z5.570.6756.0 | 677 |
| BU 70.7 /16 REV | Z5.570.5056.0 | 677 |
| BU 70.7 /16 REVZ | Z5.570.4056.0 | 677 |
| BU 70.7 /16 RV | Z5.570.8556.0 | 677 |
| BU 70.7 /16 RVZ | Z5.570.6556.0 | 677 |
| BU 70.7 /24 REV | Z5.570.5356.0 | 677 |
| BU 70.7 /24 REVZ | Z5.570.4356.0 | 677 |
| BU 70.7 /24 RV | Z5.570.8856.0 | 677 |
| BU 70.7 /24 RVZ | Z5.570.6856.0 | 677 |
| BU 72.1 / 6 REV WL | Z5.572.0656.0 | 679 |
| BU 72.1 / 6 REV WR | Z5.572.1656.0 | 679 |
| BU 72.1 / 6 REV U WL | Z5.572.4656.0 | 679 |
| BU 72.1 / 6 REV U WR | Z5.572.5656.0 | 679 |
| BU 72.1 / 6 RV WL | Z5.572.2656.0 | 679 |
| BU 72.1 / 6 RV WR | Z5.572.3656.0 | 679 |
| BU 72.1 / 6 RV U WL | Z5.572.6656.0 | 679 |
| BU 72.1 / 6 RV U WR | Z5.572.7656.0 | 679 |
| BU 72.1 /10 REV WL | Z5.572.0756.0 | 679 |
| BU 72.1 /10 REV WR | Z5.572.1756.0 | 679 |
| BU 72.1 /10 REV U WL | Z5.572.4756.0 | 679 |
| BU 72.1 /10 REV U WR | Z5.572.5756.0 | 679 |
| BU 72.1 /10 RV WL | Z5.572.2756.0 | 679 |
| BU 72.1 /10 RV WR | Z5.572.3756.0 | 679 |
| BU 72.1 /10 RV U WL | Z5.572.6756.0 | 679 |
| BU 72.1 /10 RV U WR | Z5.572.7756.0 | 679 |
| BU 72.1 /16 REV WL | Z5.572.0556.0 | 679 |
| BU 72.1 /16 REV WR | Z5.572.1556.0 | 679 |
| BU 72.1 /16 REV U WL | Z5.572.4556.0 | 679 |
| BU 72.1 /16 REV U WR | Z5.572.5556.0 | 679 |
| BU 72.1 /16 RV WL | Z5.572.2556.0 | 679 |
| BU 72.1 /16 RV WR | Z5.572.3556.0 | 679 |
| BU 72.1 /16 RV U WL | Z5.572.6556.0 | 679 |
| BU 72.1 /16 RV U WR | Z5.572.7556.0 | 679 |
| BU 72.1 /24 REV WL | Z5.572.0856.0 | 679 |
| BU 72.1 /24 REV WR | Z5.572.1856.0 | 679 |
| BU 72.1 /24 REV U WL | Z5.572.4856.0 | 679 |
| BU 72.1 /24 REV U WR | Z5.572.5856.0 | 679 |
| BU 72.1 /24 RV WL | Z5.572.2856.0 | 679 |
| BU 72.1 /24 RV WR | Z5.572.3856.0 | 679 |
| BU 72.1 /24 RV U WL | Z5.572.6856.0 | 679 |
| BU 72.1 /24 RV U WR | Z5.572.7856.0 | 679 |
| BU 72.3 / 6 REV | Z5.570.1656.0 | 679 |
| BU 72.3 / 6 REVZ | Z5.570.0656.0 | 679 |
| BU 72.3 / 6 RV | Z5.570.3656.0 | 679 |
| BU 72.3 / 6 RVZ | Z5.570.2656.0 | 679 |
| BU 72.3 /10 REV | Z5.570.1756.0 | 679 |
| BU 72.3 /10 REVZ | Z5.570.0756.0 | 679 |
| BU 72.3 /10 RV | Z5.570.3756.0 | 679 |
| BU 72.3 /10 RVZ | Z5.570.2756.0 | 679 |
| BU 72.3 /16 REV | Z5.570.1556.0 | 679 |
| BU 72.3 /16 REVZ | Z5.570.0556.0 | 679 |
| BU 72.3 /16 RV | Z5.570.3556.0 | 679 |
| BU 72.3 /16 RVZ | Z5.570.2556.0 | 679 |
| BU 72.3 /24 REV | Z5.570.1856.0 | 679 |
| BU 72.3 /24 REVZ | Z5.570.0856.0 | 679 |
| BU 72.3 /24 RV | Z5.570.3856.0 | 679 |
| BU 72.3 /24 RVZ | Z5.570.2856.0 | 679 |
| BU 72.7 / 6 REV | Z5.570.5656.0 | 681 |
| BU 72.7 / 6 REVZ | Z5.570.4656.0 | 681 |
| BU 72.7 / 6 RV | Z5.570.9656.0 | 681 |
| BU 72.7 / 6 RVZ | Z5.570.7656.0 | 681 |
| BU 72.7 /10 REV | Z5.570.5756.0 | 681 |
| BU 72.7 /10 REVZ | Z5.570.4756.0 | 681 |
| BU 72.7 /10 RV | Z5.570.9756.0 | 681 |
| BU 72.7 /10 RVZ | Z5.570.7756.0 | 681 |
| BU 72.7 /16 REV | Z5.570.5556.0 | 681 |
| BU 72.7 /16 REVZ | Z5.570.4556.0 | 681 |
| BU 72.7 /16 RV | Z5.570.9556.0 | 681 |
| BU 72.7 /16 RVZ | Z5.570.7556.0 | 681 |
| BU 72.7 /24 REV | Z5.570.5856.0 | 681 |
| BU 72.7 /24 REVZ | Z5.570.4856.0 | 681 |
| BU 72.7 /24 RV | Z5.570.9856.0 | 681 |
| BU 72.7 /24 RVZ | Z5.570.7856.0 | 681 |
| BU 73.1 /40 REV WL | Z5.572.8056.0 | 683 |
| BU 73.1 /40 REV WR | Z5.572.8356.0 | 683 |
| BU 73.1 /40 REV U WL | Z5.572.9156.0 | 683 |
| BU 73.1 /40 REV U WR | Z5.572.9356.0 | 683 |
| BU 73.1 /40 RV WL | Z5.572.8656.0 | 683 |
| BU 73.1 /40 RV WR | Z5.572.8956.0 | 683 |
| BU 73.1 /40 RV U WL | Z5.572.9556.0 | 683 |
| BU 73.1 /40 RV U WR | Z5.572.9756.0 | 683 |
| BU 73.1 /64 REV WL | Z5.572.8156.0 | 683 |
| BU 73.1 /64 REV WR | Z5.572.8456.0 | 683 |
| BU 73.1 /64 REV U WL | Z5.572.9256.0 | 683 |
| BU 73.1 /64 REV U WR | Z5.572.9456.0 | 683 |
| BU 73.1 /64 RV WL | Z5.572.8756.0 | 683 |
| BU 73.1 /64 RV WR | Z5.572.9056.0 | 683 |
| BU 73.1 /64 RV U WL | Z5.572.9656.0 | 683 |
| BU 73.1 /64 RV U WR | Z5.572.9856.0 | 683 |
| BU 73.7 /40 REV | Z5.570.7056.0 | 683 |
| BU 73.7 /40 REVZ | Z5.570.6056.0 | 683 |
| BU 73.7 /40 RV | Z5.570.9056.0 | 683 |
| BU 73.7 /40 RVZ | Z5.570.8056.0 | 683 |
| BU 73.7 /64 REV | Z5.570.7156.0 | 683 |
| BU 73.7 /64 REVZ | Z5.570.6156.0 | 683 |
| BU 73.7 /64 RV | Z5.570.9156.0 | 683 |
| BU 73.7 /64 RVZ | Z5.570.8156.0 | 683 |
| BU.EIG.ANL. | 72.300.0653.9 | 767 |
| BU.EIG.ANL. | 72.300.1053.9 | 767 |
| BU.EIG.ANL. | 72.300.1653.9 | 767 |
| BU.EIG.ANL. | 72.300.2453.9 | 767 |
| BU.EIG.ANL. | 72.300.4853.9 | 767 |
| BU.EINSATZ 3/3/6 | 72.203.1253.0 | 705 |
| BU.EINSATZ 4/6 | 72.205.1053.0 | 699 |
| BU.EINSATZ 6/6 | 72.205.1253.0 | 703 |
| BU.EINSATZ 660V | 70.400.0340.0 | 643 |
| BU.EINSATZ 660V | 70.400.0640.0 | 643 |
| BU.EINSATZ 660V | 70.400.1040.0 | 643 |
| BU.EINSATZ 660V | 70.400.1640.0 | 643 |
| BU.EINSATZ 660V | 70.400.2040.0 | 643 |
| BU.EINSATZ 660V | 70.400.2640.0 | 643 |
| BU.EINSATZ 660V | 70.400.3240.0 | 643 |
| BU.EINSATZ VERGOL | 70.301.0640.0 | 631 |
| BU.EINSATZ VERGOL | 70.301.1040.0 | 631 |
| BU.EINSATZ VERGOL | 70.301.1640.0 | 631 |
| BU.EINSTAZ VERGOL | 70.301.2440.0 | 631 |
| BUCHSE D-SUB 9 | 87.200.2200.3 | 560 |
| BUCHSE D-SUB 15 | 87.200.2201.3 | 560 |
| BUCHSE D-SUB 25 | 87.200.2202.3 | 560 |
| BUCHSE D-SUB 37 | 87.200.2203.3 | 560 |
| BUCHSE D-SUB 50 | 87.200.2204.3 | 560 |
| BUCHSENEINSATZ | 70.200.0653.0 | 689 |
| BUCHSENEINSATZ | 70.300.0640.0 | 631 |
| BUCHSENEINSATZ | 70.300.1040.0 | 631 |
| BUCHSENEINSATZ | 70.300.1640.0 | 631 |
| BUCHSENEINSATZ | 70.300.2440.0 | 631 |
| BUCHSENEINSATZ | 70.300.3253.0 | 631 |
| BUCHSENEINSATZ | 70.300.4840.0 | 631 |
| BUCHSENEINSATZ | 70.500.0653.0 | 631 |
| BUCHSENEINSATZ | 70.500.1053.0 | 631 |
| BUCHSENEINSATZ | 70.500.1653.0 | 631 |
| BUCHSENEINSATZ | 70.500.2453.0 | 631 |
| BUCHSENEINSATZ | 70.500.3253.0 | 631 |
| BUCHSENEINSATZ | 70.500.4853.0 | 631 |
| BUCHSENEINSATZ | 70.700.0658.0 | 631 |
| BUCHSENEINSATZ | 70.700.1058.0 | 631 |
| BUCHSENEINSATZ | 70.700.1658.0 | 631 |
| BUCHSENEINSATZ | 70.700.2458.0 | 631 |
| BUCHSENEINSATZ | 70.700.3253.0 | 631 |
| BUCHSENEINSATZ | 70.700.4858.0 | 631 |
| BUCHSENEINSATZ | 72.200.0653.0 | 693 |
| BUCHSENEINSATZ | 72.205.0653.0 | 707 |
| BUCHSENEINSATZ | 72.300.0653.0 | 655 |
| BUCHSENEINSATZ | 72.300.1053.0 | 655 |
| BUCHSENEINSATZ | 72.300.1653.0 | 655 |
| BUCHSENEINSATZ | 72.300.2453.0 | 655 |
| BUCHSENEINSATZ | 72.300.3253.0 | 655 |
| BUCHSENEINSATZ | 72.300.4853.0 | 655 |
| BUCHSENEINSATZ | 72.700.0658.0 | 655 |
| BUCHSENEINSATZ | 72.700.1058.0 | 655 |
| BUCHSENEINSATZ | 72.700.1658.0 | 655 |
| BUCHSENEINSATZ | 72.700.2458.0 | 655 |
| BUCHSENEINSATZ | 72.700.3258.0 | 655 |
| BUCHSENEINSATZ | 72.700.4858.0 | 655 |
| BUCHSENEINSATZ | 73.300.0353.0 | 713 |
| BUCHSENEINSATZ | 73.300.0453.0 | 713 |
| BUCHSENEINSATZ | 73.700.0753.0 | 713 |
| BUCHSENEINSATZ | 73.700.0853.0 | 713 |
| BUCHSENEINSATZ | 73.700.1553.0 | 719 |
| BUCHSENEINSATZ | 73.700.2553.0 | 719 |
| BUCHSENEINSATZ | 73.700.4058.0 | 719 |
| BUCHSENEINSATZ | 73.700.6458.0 | 719 |
| BUCHSENKONTAKT | 02.125.1121.0 | 761 |
| BUCHSENKONTAKT | 02.125.3129.8 | 739 |
| BUCHSENKONTAKT | 02.125.3229.8 | 740 |
| BUCHSENKONTAKT | 02.125.3329.8 | 740 |
| BUCHSENKONTAKT | 02.125.3429.8 | 740 |
| BUCHSENKONTAKT | 02.125.3529.8 | 740 |
| BUCHSENKONTAKT | 02.125.3629.8 | 740 |
| BUCHSENKONTAKT | 02.125.3729.8 | 740 |
| BUCHSENKONTAKT | 02.125.3829.8 | 740 |
| BUCHSENKONTAKT | 02.125.3929.8 | 740 |
| BUCHSENKONTAKT | 02.125.4029.8 | 740 |
| BUCHSENKONTAKT | 02.125.4129.8 | 740 |
| BUCHSENKONTAKT | 02.125.4229.8 | 740 |
| BUCHSENKONTAKT | 02.125.4329.8 | 740 |
| BUCHSENKONTAKT | 02.125.4429.8 | 740 |
| BUCHSENKONTAKT | 02.125.4529.8 | 740 |
| BUCHSENKONTAKT | 02.125.4629.7 | 740 |
| BUCHSENKONTAKT | 02.125.4729.7 | 740 |
| BUCHSENTEIL | 75.012.0053.0 | 758 |
| BUCHSENTEIL | 99.700.6905.5 | 760 |
| BZ 12 | 04.232.0051.0 | 218 |
| BZ 12 B | 04.832.0051.0 | 218 |
| BZ 8190 / 1 - 12 | 04.007.4089.0 | 306 |
| BZ 8190 / 13 - 24 | 04.007.4189.0 | 306 |
| BZ 8190 / 25 - 36 | 04.007.4289.0 | 306 |
| BZ 8190 / 37 - 48 | 04.007.4389.0 | 306 |
| BZ 8190 / 49 - 60 | 04.007.4489.0 | 306 |
| BZ 8190 / 61 - 72 | 04.007.4589.0 | 306 |
| BZ 8190 / 73 - 84 | 04.007.4689.0 | 306 |
| BZ 8190 / 85 - 96 | 04.007.4789.0 | 306 |
| BZ 8190 / 97 - 108 | 04.007.4889.0 | 306 |
| BZ KL 16 / 4 Z | Z4.102.0480.0 | 256 |
| BZ KL 16 / 4 Z B | Z4.802.0480.0 | 256 |
| BZ KL 16 / 6 Z | Z4.102.0680.0 | 256 |
| BZ KL 16 / 8 Z | Z4.102.0880.0 | 256 |
| BZ KL 16 / 12 Z | Z4.102.1280.0 | 256 |
| BZ KL 16 / 16 Z | Z4.102.1680.0 | 256 |
| BZ KL 16 / 20 Z | Z4.102.2080.0 | 256 |
| BZ KL 16 / 20 Z B | Z4.802.2080.0 | 256 |
| BZ KL 17 / 24 | 07.451.2480.0 | 267 |
| BZ KL 28 / 1 - 99 | 04.007.1080.0 | 214 |
| BZ KL 29 / 1 - 55 | 04.007.3080.0 | 214 |
| CEMOS-SSAC3-400V-2A | 80.020.6000.0 | 537 |
| CEMOS-SSPHC-400V-2,5A | 80.020.6003.0 | 537 |
| CODIERAST BU.LST. | 05.561.9153.0 | 286 |
| CODIERAST BU.LST. | 05.561.9153.0 | 37 |
| CODIERAST STIFTL. | 05.561.0053.0 | 36 |
| CODIERAST STIFTL. | 05.561.0053.0 | 284 |
| CODIERSATZ | Z5.593.4053.0 | 788 |
| CODIERSTIFT-AST | 05.561.9453.0 | 319 |
| CODIERSTIFT-AST | 05.561.9453.5 | 319 |
| CODIERSTUECK-AST | 05.584.0053.0 | 311 |
| CODIERSTUECK-AST | 05.584.0053.0 | 137 |
| CODIERSTUECK-AST | 05.594.5153.0 | 219 |
| CODIERSTUECK-AST | 05.599.8053.0 | 321 |
| CODIERSTUECK-AST | 05.599.8053.0 | 205 |
| CRIMPBACKEN A | 05.502.2000.0 | 798 |
| CRIMPBACKEN A | 05.502.2000.0 | 741 |
| CRIMPBACKEN B | 05.502.2100.0 | 631 |
| CRIMPBACKEN B | 05.502.2100.0 | 798 |
| CRIMPBACKEN C | 05.502.2200.0 | 798 |
| CRIMPBACKEN C | 05.502.2200.0 | 741 |
| CRIMPBACKEN D | 05.502.2300.0 | 798 |
| CRIMPBACKEN D | 05.502.2300.0 | 739 |
| CRIMPBACKEN E | 05.502.2400.0 | 683 |
| CRIMPBACKEN E | 05.502.2400.0 | 798 |
| CZ 0,5 -2,5 MM2 F.RV2/S | 95.101.0612.0 | 207 |
| DATENEINF.OT. 16P | 70.060.1628.0 | 755 |
| DECKEL | 07.409.7056.0 | 780 |
| DECKEL | 07.409.7156.0 | 780 |
| DECKEL | 07.409.7256.0 | 780 |
| DECKEL | 07.409.7356.0 | 780 |
| DECKEL | 07.417.6729.0 | 713 |
| DECKEL | 07.417.6753.0 | 713 |
| DECKEL | Z7.416.1656.0 | 780 |
| DECKEL | Z7.416.1756.0 | 780 |
| DECKEL | Z7.416.1856.0 | 780 |
| DECKEL | Z7.419.6228.0 | 780 |
| DECKEL M.DICHTUNG | 07.417.6829.0 | 713 |
| DECKEL M.VERRIEG. | Z7.419.6128.0 | 780 |
| DIN 46228-A 0,5 - 6 | 06.600.4027.0 | 796 |
| DIN 46228-A 0,75- 6 | 06.600.4127.0 | 796 |
| DIN 46228-A 1 - 6 | 06.600.4227.0 | 796 |
| DIN 46228-A 1,5 - 7 | 06.600.4327.0 | 796 |
| DIN 46228-A 2,5 - 7 | 06.600.4427.0 | 796 |
| DIN 46228-A 4 - 9 | 06.600.4527.0 | 796 |
| DIN 46228-A 6 -10 | 06.600.4627.0 | 796 |
| DIN 46228-A10 -12 | 06.600.4727.0 | 796 |
| DIN 46228-A16 -12 | 06.600.4827.0 | 796 |
| DIN 46228-A25 -15 | 06.600.4927.0 | 796 |
| DIN 46228-E 0,5 -8 | 06.600.2027.0 | 796 |
| DIN 46228-E 0,75- 8 | 06.600.2127.0 | 796 |
| DIN 46228-E 1 - 8 | 06.600.2227.0 | 796 |
| DIN 46228-E 1,5 - 8 | 06.600.2327.0 | 796 |
| DIN 46228-E 1,5 -18 | 06.600.2427.0 | 796 |
| DIN 46228-E 2,5 - 8 | 06.600.2527.0 | 796 |
| DIN 46228-E 2,5 -18 | 06.600.2627.0 | 796 |
| DIN 46228-E 4 -10 | 06.600.2727.0 | 796 |
| DIN 46228-E 4 -18 | 06.600.2827.0 | 796 |
| DIN 46228-E 6 -12 | 06.600.2927.0 | 796 |
| DIN 46228-E 6 -18 | 06.600.3027.0 | 796 |
| DIN 46228-E10 -12 | 06.600.3127.0 | 796 |
| DIN 46228-E10 -18 | 06.600.3227.0 | 796 |
| DIN 46228-E16 -12 | 06.600.3327.0 | 796 |
| DIN 46228-E16 -18 | 06.600.3427.0 | 796 |
| DIN 46228-E25 -18 | 06.600.3527.0 | 796 |
| DIN 5264 A 0,4 X 2,5 | 06.502.4300.0 | 281 |
| DIN 5264 A 0,6 x 3,5 | 06.502.4000.0 | 799 |
| DIN 5264 A 0,6 x 3,5 | 06.502.4000.0 | 293 |
| DIN 5264 A 0,6 x 3,5 | 06.502.4000.0 | 20 |
| DIN 5264 A 0,8 x 4,0 | 06.502.4100.0 | 21 |
| DIN 5264 A 1,0 x 5,5 | 06.502.4200.0 | 21 |
| DIN 5264 B 0,6X3,5 M | 06.502.5000.0 | 30 |
| dipos EM | 80.061.0010.3 | 582 |
| DIPOS JB 4,3 | Z8.000.0229.5 | 499 |
| DIPOS KODIERAST | Z5.563.0453.0 | 499 |
| DIPOS KSQ | 80.060.0020.1 | 508 |
| DIPOS KSQ | 80.060.0021.1 | 508 |
| DIPOS KSQ 9.5 .. 10.5V | 82.081.0000.0 | 508 |
| DIPOS PT100 | 80.060.0010.1 | 499 |
| DIPOS PT100 | 80.060.0011.1 | 499 |
| DIPOS PT100-3 0-400C | 82.011.3004.0 | 499 |
| DIPOS TC | 80.060.0030.1 | 500 |
| DIPOS TC | 80.060.0031.1 | 500 |
| DIPOS TC-K 0-1200C | 82.021.1812.0 | 500 |
| DIPOS UMC 12,5 | 80.060.0000.1 | 582 |
| DIPOS UMC 12,5 | 80.060.0001.1 | 582 |
| DIST-... /V0 | Z1.299.3055.0 | 38 |
| DIST-1N 4007 -1 /V0 | Z1.299.3155.0 | 38 |
| DIST-1N 4007 -2 /V0 | Z1.299.3355.0 | 38 |
| DIST-D /V0 | Z1.299.3255.0 | 38 |
| DNU-H-400V-250V4A | 86.030.6353.0 | 542 |
| DNU-U-400V-250V4A | 87.030.6353.0 | 542 |
| DRA-400V-250V3A | 81.010.1000.0 | 543 |
| DST85/ 2 | 25.002.0253.0 | 328 |
| DST85/ 2 OB | 25.003.0253.0 | 328 |
| DST85/ 3 | 25.002.0353.0 | 328 |
| DST85/ 3 OB | 25.003.0353.0 | 328 |
| DST85/ 4 | 25.002.0453.0 | 328 |
| DST85/ 4 OB | 25.003.0453.0 | 328 |

# contents of type description

# contents TYPE


| Type | Part no. | section / page |
|---|---|---|
| DST85/ 5 | 25.002.0553.0 | 328 |
| DST85/ 5 OB | 25.003.0553.0 | 328 |
| DST85/ 6 | 25.002.0653.0 | 328 |
| DST85/ 6 OB | 25.003.0653.0 | 328 |
| DST85/ 7 | 25.002.0753.0 | 328 |
| DST85/ 7 OB | 25.003.0753.0 | 328 |
| DST85/ 8 | 25.002.0853.0 | 328 |
| DST85/ 8 OB | 25.003.0853.0 | 328 |
| DST85/ 9 | 25.002.0953.0 | 328 |
| DST85/ 9 OB | 25.003.0953.0 | 328 |
| DST85/10 | 25.002.1053.0 | 328 |
| DST85/10 OB | 25.003.1053.0 | 328 |
| DST85/11 | 25.002.1153.0 | 328 |
| DST85/11 OB | 25.003.1153.0 | 328 |
| DST85/12 | 25.002.1253.0 | 328 |
| DST85/12 OB | 25.003.1253.0 | 328 |
| DSTLF85/ 2 | 25.004.0253.0 | 328 |
| DSTLF85/ 2 OB | 25.005.0253.0 | 328 |
| DSTLF85/ 3 | 25.004.0353.0 | 328 |
| DSTLF85/ 3 OB | 25.005.0353.0 | 328 |
| DSTLF85/ 4 | 25.004.0453.0 | 328 |
| DSTLF85/ 4 OB | 25.005.0453.0 | 328 |
| DSTLF85/ 5 | 25.004.0553.0 | 328 |
| DSTLF85/ 5 OB | 25.005.0553.0 | 328 |
| DSTLF85/ 6 | 25.004.0653.0 | 328 |
| DSTLF85/ 6 OB | 25.005.0653.0 | 328 |
| DSTLF85/ 7 | 25.004.0753.0 | 328 |
| DSTLF85/ 7 OB | 25.005.0753.0 | 328 |
| DSTLF85/ 8 | 25.004.0853.0 | 328 |
| DSTLF85/ 8 OB | 25.005.0853.0 | 328 |
| DSTLF85/ 9 | 25.004.0953.0 | 328 |
| DSTLF85/ 9 OB | 25.005.0953.0 | 328 |
| DSTLF85/10 | 25.004.1053.0 | 328 |
| DSTLF85/10 OB | 25.005.1053.0 | 328 |
| DSTLF85/11 | 25.004.1153.0 | 328 |
| DSTLF85/11 OB | 25.005.1153.0 | 328 |
| DSTLF85/12 | 25.004.1253.0 | 328 |
| DSTLF85/12 OB | 25.005.1253.0 | 328 |
| DSU-400V-250V4A | 87.030.6453.0 | 542 |
| EAS-UE / D-135 | 87.222.5953.0 | 564 |
| EAS-UE / D-L-135 | 87.222.6053.0 | 564 |
| EAS-UE/D-115 | 87.221.5953.0 | 562 |
| EAS-UE/D-L-115 | 87.221.6053.0 | 562 |
| EKAP BLAU | Z8.000.0202.2 | 442 |
| EKAP ROT | Z8.000.0202.1 | 442 |
| ETAGENKLEMME | 56.704.6953.1 | 30 |
| ETIKETTEN A4 | 05.591.3089.0 | 416 |
| EUROPAKLEMMLST.1P | 99.261.3521.9 | 258 |
| F. 400/690V-SER. | 05.502.3500.0 | 631 |
| F.EIGSICH.ANL.ZINKDRCKG | 99.721.3329.7 | 772 |
| F.EIGSICH.ANL.ZINKDRCKG | 99.723.3329.7 | 772 |
| F.EIGSICH.ANL.ZINKDRCKG | 99.727.3329.7 | 772 |
| F.STCKHUELS.6,3 BIS2,5Q | 05.582.8653.0 | 175 |
| FEDERKONTAKT | 02.124.4029.0 | 207 |
| FEDERKONTAKT | 02.124.4100.0 | 207 |
| FEDERKONTAKT | 02.125.1629.0 | 291 |
| FEDERKONTAKT | 02.125.1729.0 | 291 |
| FEDERKONTAKT BAND | 02.125.1600.0 | 291 |
| FEDERKONTAKT BAND | 02.125.1700.0 | 291 |
| FKK18 / 1 | 02.220.0121.0 | 217 |
| FKK18 / 1 Z | Z2.220.0121.0 | 217 |
| FKK18 / 2 | 02.220.0321.0 | 217 |
| FKK18 / 2 Z | Z2.220.0321.0 | 217 |
| FKK18 / 3 | 02.220.0421.0 | 217 |
| FKK18 / 3 Z | Z2.220.0421.0 | 217 |
| FLACHSTECKER | 05.555.8521.0 | 584 |
| FLACHSTECKER | 05.555.8621.0 | 584 |
| FLACHSTECKER | 05.555.8721.0 | 584 |
| FLACHSTECKER | 05.555.8821.0 | 584 |
| FLACHSTECKER | 05.555.8921.0 | 584 |
| FLACHSTECKER | 05.555.9121.0 | 584 |
| FLARE MOVE BM SERIE 38 | 80.063.4129.3 | 444 |
| FLARE MOVE BZ SERIE 38 | 80.063.4029.3 | 444 |
| FLARE-110V-1W-250V6A-F | 80.010.4131.0 | 442 |
| FLARE-115V/48VDC-0,5A | 80.020.4102.0 | 478 |
| FLARE-12DC-1W-250V6A-F | 80.010.4106.0 | 442 |
| FLARE-230V-1W-250V6A-F | 80.010.4141.0 | 442 |
| FLARE-230VAC/48VDC-0,5A | 80.020.4103.0 | 479 |
| FLARE-24DC-1W-250V6A-F | 80.010.4100.0 | 442 |
| FLARE-24DC-2W-250V6A-F | 80.010.4103.0 | 443 |
| FLARE-24V-1S-250V6A-HA | 80.010.4101.0 | 446 |
| FLARE-24V-1W-250V6A-CUT | 80.010.4120.0 | 446 |
| FLARE-24V-1W-48V20M | 80.010.4005.0 | 442 |
| FLARE-24V-1W-48V20M-F | 80.010.4105.0 | 442 |
| FLARE-24VDC/230VAC-0,5A | 80.020.4150.0 | 479 |
| FLARE-24VDC/48VDC-0,5A | 80.020.4100.0 | 478 |
| FLARE-24VDC/48VDC-2A | 80.020.4101.0 | 478 |
| FLARE-PID/0060-S-250V6A | 81.020.4102.0 | 462 |
| FLARE-PID/0100-S-250V6A | 81.020.4101.0 | 462 |
| FLARE-TIMER-S-250V6A | 81.020.4100.0 | 462 |
| FLK-SR 10 | 87.210.2201.3 | 561 |
| FLK-SR 14 | 87.210.2202.3 | 561 |
| FLK-SR 16 | 87.210.2203.3 | 561 |
| FLK-SR 20 | 87.210.2204.3 | 561 |
| FLK-SR 26 | 87.210.2205.3 | 561 |
| FLK-SR 34 | 87.210.2207.3 | 561 |
| FLK-SR 40 | 87.210.2208.3 | 561 |
| FLK-SR 50 | 87.210.2210.3 | 561 |
| FLK-SR 60 | 87.210.2211.3 | 561 |
| FLK-SR 64 | 87.210.2212.3 | 561 |
| FRONTSTECKER 115 | 87.221.5853.0 | 562 |
| FRONTSTECKER 135/150 | 87.222.5853.0 | 564 |
| FSR-25VAC-12V1A | 87.230.0553.0 | 528 |
| FSR-25VAC-15V1A | 87.230.0653.0 | 528 |
| FSR-25VAC-5V1A | 87.230.0453.0 | 528 |
| FSR-28VAC-24V1A | 87.230.0753.0 | 528 |
| FUER 0,5 MM2 | 02.123.7021.0 | 631 |
| FUER 0,5 MM2 | 05.543.7021.0 | 631 |
| FUER 0,5 MM2 KURZ | 05.543.9021.0 | 655 |
| FUER 0,75-1 MM2 | 02.123.7121.0 | 631 |
| FUER 0,75-1 MM2 | 05.543.7121.0 | 631 |
| FUER 0,75-1 MM2 | 05.543.9121.0 | 655 |
| FUER 1,5 MM2 | 02.123.7221.0 | 631 |
| FUER 1,5 MM2 | 05.543.7221.0 | 631 |
| FUER 1,5 MM2 KURZ | 05.543.9221.0 | 655 |
| FUER 1,5 MM2 VERGOLD | 02.123.7201.0 | 631 |
| FUER 1,5 MM2 VERGOLD | 05.543.7201.0 | 631 |
| FUER 2,5 MM2 | 02.123.7321.0 | 631 |
| FUER 2,5 MM2 | 05.543.7321.0 | 631 |
| FUER 2,5 MM2 KURZ | 05.543.9321.0 | 655 |
| FUER 4 MM2 | 02.123.7421.0 | 631 |
| FUER 4 MM2 | 05.543.7421.0 | 631 |
| FUER 4 MM2 | 05.543.9421.0 | 655 |
| FUER 70ER KLEMMENADAPT. | Z7.256.0227.0 | 781 |
| FUER 70ER KLEMMENADAPT. | Z7.256.0327.0 | 781 |
| FUER 70ER KLEMMENADAPT. | Z7.256.0427.0 | 781 |
| FUER 70ER KLEMMENADAPT. | Z7.256.0527.0 | 781 |
| FUER 70ER KLEMMENADAPT. | Z7.256.0627.0 | 781 |
| FUER 70ER KLEMMENADAPT. | Z7.256.0727.0 | 781 |
| FUER 70ER KLEMMENADAPT. | Z7.256.0827.0 | 781 |
| FUER 70ER KLEMMENADAPT. | Z7.256.0927.0 | 781 |
| FUER 70ER KLEMMENADAPT. | Z7.256.1027.0 | 781 |
| FUER 70ER KLEMMENADAPT. | Z7.256.1127.0 | 781 |
| FUER 70ER KLEMMENADAPT. | Z7.256.1227.0 | 781 |
| FUER NYAF 1,5 MM2 | 05.592.7553.0 | 138 |
| FUER NYAF 2,5 MM2 | 05.592.7653.0 | 138 |
| FUER WK 4E/U | Z1.299.9053.0 | 176 |
| FUER WKI 10/U | 04.325.8553.8 | 69 |
| FUER WKI 16/U | 04.325.8653.8 | 79 |
| GEH.OT. TEIL L | 75.900.0135.0 | 664 |
| GEH.OT. TEIL L | 75.950.1635.0 | 664 |
| GEH.OT. TEIL L | 75.950.2435.0 | 664 |
| GEH.OT. TEIL L | 75.960.1635.0 | 664 |
| GEH.OT. TEIL L | 75.960.2435.0 | 664 |
| GEH.UT. 10 POL. | 70.320.1038.0 | 684 |
| GEH.UT. 16 POL. | 70.320.1638.0 | 684 |
| GEH.UT. 24 POL. | 70.320.2438.0 | 684 |
| GEH.UT. 6 POL. | 70.320.0638.0 | 684 |
| GEH.UT. TEIL F | 75.900.0035.0 | 664 |
| GEH.UT. TEIL F | 75.931.1635.0 | 664 |
| GEH.UT. TEIL F | 75.931.2435.0 | 664 |
| GEH.UT. TEIL F | 75.933.1635.0 | 664 |
| GEH.UT. TEIL F | 75.933.2435.0 | 664 |
| GEH.UT. TEIL F | 75.934.2435.0 | 664 |
| GEH.UT. TEIL F | 75.941.1635.0 | 664 |
| GEH.UT. TEIL F | 75.941.2435.0 | 664 |
| GEHAEUEOBERTEIL | 70.354.0635.3 | 633 |
| GEHAEUSE-OBERTEIL | 70.351.1035.1 | 637 |
| GEHAEUSE-OBERTEIL | 70.351.1635.1 | 637 |
| GEHAEUSE-OBERTEIL | 70.351.2435.1 | 637 |
| GEHAEUSE-OBERTEIL | 70.355.1035.1 | 637 |
| GEHAEUSE-OBERTEIL | 70.355.1035.2 | 637 |
| GEHAEUSE-OBERTEIL | 70.355.1635.1 | 637 |
| GEHAEUSE-OBERTEIL | 70.355.1635.2 | 637 |
| GEHAEUSE-OBERTEIL | 70.355.2435.1 | 637 |
| GEHAEUSE-OBERTEIL | 70.355.2435.2 | 637 |
| GEHAEUSE-OBERTEIL | 70.356.1035.1 | 637 |
| GEHAEUSE-OBERTEIL | 70.356.1635.1 | 637 |
| GEHAEUSE-OBERTEIL | 70.356.2435.1 | 637 |
| GEHAEUSE-OBERTEIL | 70.357.1035.1 | 637 |
| GEHAEUSE-OBERTEIL | 70.357.1635.1 | 637 |
| GEHAEUSE-OBERTEIL | 70.357.2435.1 | 637 |
| GEHAEUSEOBERTEIL | 70.350.0628.7 | 769 |
| GEHAEUSEOBERTEIL | 70.350.0635.0 | 633 |
| GEHAEUSEOBERTEIL | 70.350.0635.1 | 633 |
| GEHAEUSEOBERTEIL | 70.350.0635.2 | 633 |
| GEHAEUSEOBERTEIL | 70.350.0635.3 | 633 |
| GEHAEUSEOBERTEIL | 70.350.1028.7 | 769 |
| GEHAEUSEOBERTEIL | 70.350.1035.0 | 637 |
| GEHAEUSEOBERTEIL | 70.350.1035.1 | 637 |
| GEHAEUSEOBERTEIL | 70.350.1035.3 | 637 |
| GEHAEUSEOBERTEIL | 70.350.1628.7 | 769 |
| GEHAEUSEOBERTEIL | 70.350.1635.0 | 637 |
| GEHAEUSEOBERTEIL | 70.350.1635.1 | 637 |
| GEHAEUSEOBERTEIL | 70.350.1635.3 | 637 |
| GEHAEUSEOBERTEIL | 70.350.2435.0 | 637 |
| GEHAEUSEOBERTEIL | 70.350.2435.1 | 637 |
| GEHAEUSEOBERTEIL | 70.350.2435.2 | 637 |
| GEHAEUSEOBERTEIL | 70.350.2435.3 | 637 |
| GEHAEUSEOBERTEIL | 70.350.3235.0 | 637 |
| GEHAEUSEOBERTEIL | 70.350.3235.1 | 637 |
| GEHAEUSEOBERTEIL | 70.350.3235.2 | 637 |
| GEHAEUSEOBERTEIL | 70.350.3235.3 | 637 |
| GEHAEUSEOBERTEIL | 70.350.4828.7 | 769 |
| GEHAEUSEOBERTEIL | 70.350.4835.0 | 633 |
| GEHAEUSEOBERTEIL | 70.350.4835.1 | 633 |
| GEHAEUSEOBERTEIL | 70.350.4835.2 | 633 |
| GEHAEUSEOBERTEIL | 70.350.4835.3 | 633 |
| GEHAEUSEOBERTEIL | 70.351.0635.0 | 633 |
| GEHAEUSEOBERTEIL | 70.351.0635.2 | 633 |
| GEHAEUSEOBERTEIL | 70.351.0635.3 | 633 |
| GEHAEUSEOBERTEIL | 70.351.1035.0 | 637 |
| GEHAEUSEOBERTEIL | 70.351.1035.2 | 637 |
| GEHAEUSEOBERTEIL | 70.351.1035.3 | 637 |
| GEHAEUSEOBERTEIL | 70.351.1635.0 | 637 |
| GEHAEUSEOBERTEIL | 70.351.1635.2 | 637 |
| GEHAEUSEOBERTEIL | 70.351.1635.3 | 637 |
| GEHAEUSEOBERTEIL | 70.351.2435.0 | 637 |
| GEHAEUSEOBERTEIL | 70.351.2435.2 | 637 |
| GEHAEUSEOBERTEIL | 70.351.2435.3 | 637 |
| GEHAEUSEOBERTEIL | 70.352.0628.7 | 769 |
| GEHAEUSEOBERTEIL | 70.352.0635.0 | 633 |
| GEHAEUSEOBERTEIL | 70.352.0635.1 | 633 |
| GEHAEUSEOBERTEIL | 70.352.0635.2 | 633 |
| GEHAEUSEOBERTEIL | 70.352.0635.3 | 633 |
| GEHAEUSEOBERTEIL | 70.352.1035.0 | 637 |
| GEHAEUSEOBERTEIL | 70.352.1035.1 | 637 |
| GEHAEUSEOBERTEIL | 70.352.1035.2 | 637 |
| GEHAEUSEOBERTEIL | 70.352.1035.3 | 637 |
| GEHAEUSEOBERTEIL | 70.352.1628.7 | 769 |
| GEHAEUSEOBERTEIL | 70.352.1635.0 | 637 |
| GEHAEUSEOBERTEIL | 70.352.1635.1 | 637 |
| GEHAEUSEOBERTEIL | 70.352.1635.2 | 637 |
| GEHAEUSEOBERTEIL | 70.352.1635.3 | 637 |
| GEHAEUSEOBERTEIL | 70.352.2428.7 | 773 |
| GEHAEUSEOBERTEIL | 70.352.2435.0 | 637 |
| GEHAEUSEOBERTEIL | 70.352.2435.1 | 637 |
| GEHAEUSEOBERTEIL | 70.352.2435.2 | 637 |
| GEHAEUSEOBERTEIL | 70.352.2435.3 | 637 |
| GEHAEUSEOBERTEIL | 70.352.3235.0 | 637 |
| GEHAEUSEOBERTEIL | 70.352.3235.1 | 637 |
| GEHAEUSEOBERTEIL | 70.352.3235.2 | 637 |
| GEHAEUSEOBERTEIL | 70.352.3235.3 | 637 |
| GEHAEUSEOBERTEIL | 70.352.4828.7 | 769 |
| GEHAEUSEOBERTEIL | 70.352.4835.0 | 633 |
| GEHAEUSEOBERTEIL | 70.352.4835.1 | 633 |
| GEHAEUSEOBERTEIL | 70.352.4835.2 | 633 |
| GEHAEUSEOBERTEIL | 70.352.4835.3 | 633 |
| GEHAEUSEOBERTEIL | 70.353.0635.0 | 633 |
| GEHAEUSEOBERTEIL | 70.353.0635.2 | 633 |
| GEHAEUSEOBERTEIL | 70.353.0635.3 | 633 |
| GEHAEUSEOBERTEIL | 70.353.1035.0 | 637 |
| GEHAEUSEOBERTEIL | 70.353.1035.1 | 637 |
| GEHAEUSEOBERTEIL | 70.353.1035.2 | 637 |
| GEHAEUSEOBERTEIL | 70.353.1035.3 | 637 |
| GEHAEUSEOBERTEIL | 70.353.1635.0 | 637 |
| GEHAEUSEOBERTEIL | 70.353.1635.1 | 637 |
| GEHAEUSEOBERTEIL | 70.353.1635.2 | 637 |
| GEHAEUSEOBERTEIL | 70.353.1635.3 | 637 |
| GEHAEUSEOBERTEIL | 70.353.2435.0 | 637 |
| GEHAEUSEOBERTEIL | 70.353.2435.1 | 637 |
| GEHAEUSEOBERTEIL | 70.353.2435.2 | 637 |
| GEHAEUSEOBERTEIL | 70.353.2435.3 | 637 |
| GEHAEUSEOBERTEIL | 70.353.3235.1 | 637 |
| GEHAEUSEOBERTEIL | 70.353.3235.2 | 637 |
| GEHAEUSEOBERTEIL | 70.353.4828.7 | 769 |
| GEHAEUSEOBERTEIL | 70.353.4835.1 | 633 |
| GEHAEUSEOBERTEIL | 70.353.4835.2 | 633 |
| GEHAEUSEOBERTEIL | 70.354.0628.7 | 769 |
| GEHAEUSEOBERTEIL | 70.354.0635.0 | 633 |
| GEHAEUSEOBERTEIL | 70.354.0635.1 | 633 |
| GEHAEUSEOBERTEIL | 70.354.0635.2 | 633 |
| GEHAEUSEOBERTEIL | 70.354.1028.7 | 769 |
| GEHAEUSEOBERTEIL | 70.354.1035.0 | 637 |
| GEHAEUSEOBERTEIL | 70.354.1035.1 | 637 |
| GEHAEUSEOBERTEIL | 70.354.1035.2 | 637 |
| GEHAEUSEOBERTEIL | 70.354.1035.3 | 637 |
| GEHAEUSEOBERTEIL | 70.354.1628.7 | 769 |
| GEHAEUSEOBERTEIL | 70.354.1635.0 | 637 |
| GEHAEUSEOBERTEIL | 70.354.1635.1 | 637 |
| GEHAEUSEOBERTEIL | 70.354.1635.2 | 637 |
| GEHAEUSEOBERTEIL | 70.354.1635.3 | 637 |
| GEHAEUSEOBERTEIL | 70.354.2435.0 | 637 |
| GEHAEUSEOBERTEIL | 70.354.2435.1 | 637 |
| GEHAEUSEOBERTEIL | 70.354.2435.2 | 637 |
| GEHAEUSEOBERTEIL | 70.354.2435.3 | 637 |
| GEHAEUSEOBERTEIL | 70.354.3235.1 | 637 |
| GEHAEUSEOBERTEIL | 70.354.3235.2 | 637 |
| GEHAEUSEOBERTEIL | 70.354.4828.7 | 769 |
| GEHAEUSEOBERTEIL | 70.354.4835.1 | 633 |
| GEHAEUSEOBERTEIL | 70.354.4835.2 | 633 |
| GEHAEUSEOBERTEIL | 70.355.1028.7 | 769 |
| GEHAEUSEOBERTEIL | 70.355.1035.0 | 637 |
| GEHAEUSEOBERTEIL | 70.355.1035.3 | 637 |
| GEHAEUSEOBERTEIL | 70.355.1628.7 | 769 |
| GEHAEUSEOBERTEIL | 70.355.1635.0 | 637 |
| GEHAEUSEOBERTEIL | 70.355.1635.3 | 637 |
| GEHAEUSEOBERTEIL | 70.355.2435.0 | 637 |
| GEHAEUSEOBERTEIL | 70.355.2435.3 | 637 |
| GEHAEUSEOBERTEIL | 70.356.1035.0 | 637 |
| GEHAEUSEOBERTEIL | 70.356.1035.2 | 637 |
| GEHAEUSEOBERTEIL | 70.356.1035.3 | 637 |
| GEHAEUSEOBERTEIL | 70.356.1635.0 | 637 |
| GEHAEUSEOBERTEIL | 70.356.1635.2 | 637 |
| GEHAEUSEOBERTEIL | 70.356.1635.3 | 637 |
| GEHAEUSEOBERTEIL | 70.356.2435.0 | 637 |
| GEHAEUSEOBERTEIL | 70.356.2435.2 | 637 |
| GEHAEUSEOBERTEIL | 70.356.2435.3 | 637 |
| GEHAEUSEOBERTEIL | 70.357.1035.0 | 637 |
| GEHAEUSEOBERTEIL | 70.357.1035.2 | 637 |
| GEHAEUSEOBERTEIL | 70.357.1035.3 | 637 |
| GEHAEUSEOBERTEIL | 70.357.1635.0 | 637 |
| GEHAEUSEOBERTEIL | 70.357.1635.2 | 637 |
| GEHAEUSEOBERTEIL | 70.357.1635.3 | 637 |
| GEHAEUSEOBERTEIL | 70.357.2435.0 | 637 |
| GEHAEUSEOBERTEIL | 70.357.2435.2 | 637 |
| GEHAEUSEOBERTEIL | 70.357.2435.3 | 637 |
| GEHAEUSEOBERTEIL | 70.358.1035.0 | 637 |
| GEHAEUSEOBERTEIL | 70.358.1035.1 | 637 |
| GEHAEUSEOBERTEIL | 70.358.1035.2 | 637 |
| GEHAEUSEOBERTEIL | 70.358.1035.3 | 637 |
| GEHAEUSEOBERTEIL | 70.358.1635.0 | 637 |
| GEHAEUSEOBERTEIL | 70.358.1635.1 | 637 |
| GEHAEUSEOBERTEIL | 70.358.1635.2 | 637 |
| GEHAEUSEOBERTEIL | 70.358.1635.3 | 637 |
| GEHAEUSEOBERTEIL | 70.358.2435.0 | 637 |
| GEHAEUSEOBERTEIL | 70.358.2435.1 | 637 |
| GEHAEUSEOBERTEIL | 70.358.2435.2 | 637 |
| GEHAEUSEOBERTEIL | 70.358.2435.3 | 637 |
| GEHAEUSEOBERTEIL | 70.359.1035.0 | 637 |
| GEHAEUSEOBERTEIL | 70.359.1035.1 | 637 |

# contents


| Type | Part no. | section / page |
|---|---|---|
| GEHAEUSEOBERTEIL | 70.359.1035.2 | 637 |
| GEHAEUSEOBERTEIL | 70.359.1035.3 | 637 |
| GEHAEUSEOBERTEIL | 70.359.1635.0 | 637 |
| GEHAEUSEOBERTEIL | 70.359.1635.1 | 637 |
| GEHAEUSEOBERTEIL | 70.359.1635.2 | 637 |
| GEHAEUSEOBERTEIL | 70.359.1635.3 | 637 |
| GEHAEUSEOBERTEIL | 70.359.2435.0 | 637 |
| GEHAEUSEOBERTEIL | 70.359.2435.1 | 637 |
| GEHAEUSEOBERTEIL | 70.359.2435.2 | 637 |
| GEHAEUSEOBERTEIL | 70.359.2435.3 | 637 |
| GEHAEUSEOBERTEIL | 70.360.0628.9 | 769 |
| GEHAEUSEOBERTEIL | 70.360.1028.9 | 769 |
| GEHAEUSEOBERTEIL | 70.360.1628.9 | 769 |
| GEHAEUSEOBERTEIL | 70.360.2428.9 | 769 |
| GEHAEUSEOBERTEIL | 70.360.4828.9 | 769 |
| GEHAEUSEOBERTEIL | 70.362.0628.9 | 769 |
| GEHAEUSEOBERTEIL | 70.362.1028.9 | 769 |
| GEHAEUSEOBERTEIL | 70.362.1628.9 | 769 |
| GEHAEUSEOBERTEIL | 70.362.2428.9 | 772 |
| GEHAEUSEOBERTEIL | 70.362.4828.9 | 769 |
| GEHAEUSEOBERTEIL | 70.363.0628.9 | 769 |
| GEHAEUSEOBERTEIL | 70.363.1028.9 | 769 |
| GEHAEUSEOBERTEIL | 70.363.1628.9 | 769 |
| GEHAEUSEOBERTEIL | 70.363.2428.9 | 769 |
| GEHAEUSEOBERTEIL | 70.364.0628.9 | 769 |
| GEHAEUSEOBERTEIL | 70.364.1028.9 | 769 |
| GEHAEUSEOBERTEIL | 70.364.1628.9 | 769 |
| GEHAEUSEOBERTEIL | 70.364.4828.9 | 769 |
| GEHAEUSEOBERTEIL | 70.365.1028.9 | 769 |
| GEHAEUSEOBERTEIL | 70.365.1628.9 | 769 |
| GEHAEUSEOBERTEIL | 70.365.2428.9 | 769 |
| GEHAEUSEOBERTEIL | 70.367.1028.9 | 769 |
| GEHAEUSEOBERTEIL | 70.367.1628.9 | 769 |
| GEHAEUSEOBERTEIL | 70.367.2428.9 | 769 |
| GEHAEUSEOBERTEIL | 70.368.1028.9 | 769 |
| GEHAEUSEOBERTEIL | 70.368.1628.9 | 769 |
| GEHAEUSEOBERTEIL | 70.368.2428.9 | 769 |
| GEHAEUSEOBERTEIL | 70.369.1028.9 | 769 |
| GEHAEUSEOBERTEIL | 70.369.1628.9 | 769 |
| GEHAEUSEOBERTEIL | 70.372.0628.7 | 773 |
| GEHAEUSEOBERTEIL | 70.372.0635.0 | 733 |
| GEHAEUSEOBERTEIL | 70.372.0635.3 | 733 |
| GEHAEUSEOBERTEIL | 70.372.1028.7 | 773 |
| GEHAEUSEOBERTEIL | 70.372.1035.0 | 733 |
| GEHAEUSEOBERTEIL | 70.372.1035.3 | 733 |
| GEHAEUSEOBERTEIL | 70.372.1628.7 | 773 |
| GEHAEUSEOBERTEIL | 70.372.1635.0 | 733 |
| GEHAEUSEOBERTEIL | 70.372.1635.3 | 733 |
| GEHAEUSEOBERTEIL | 70.372.2428.7 | 773 |
| GEHAEUSEOBERTEIL | 70.372.4828.7 | 773 |
| GEHAEUSEOBERTEIL | 70.372.4835.3 | 733 |
| GEHAEUSEOBERTEIL | 70.374.2435.3 | 733 |
| GEHAEUSEOBERTEIL | 70.375.4828.9 | 772 |
| GEHAEUSEOBERTEIL | 70.375.4835.3 | 733 |
| GEHAEUSEOBERTEIL | 70.377.4828.9 | 772 |
| GEHAEUSEOBERTEIL | 71.350.1035.0 | 633 |
| GEHAEUSEOBERTEIL | 71.350.1035.1 | 633 |
| GEHAEUSEOBERTEIL | 71.350.1035.2 | 633 |
| GEHAEUSEOBERTEIL | 71.350.1035.3 | 633 |
| GEHAEUSEOBERTEIL | 71.350.1635.0 | 633 |
| GEHAEUSEOBERTEIL | 71.350.1635.1 | 633 |
| GEHAEUSEOBERTEIL | 71.350.1635.2 | 633 |
| GEHAEUSEOBERTEIL | 71.350.1635.3 | 633 |
| GEHAEUSEOBERTEIL | 71.350.2435.0 | 633 |
| GEHAEUSEOBERTEIL | 71.350.2435.1 | 633 |
| GEHAEUSEOBERTEIL | 71.350.2435.2 | 633 |
| GEHAEUSEOBERTEIL | 71.350.2435.3 | 633 |
| GEHAEUSEOBERTEIL | 71.351.1035.0 | 633 |
| GEHAEUSEOBERTEIL | 71.351.1035.1 | 633 |
| GEHAEUSEOBERTEIL | 71.351.1035.2 | 633 |
| GEHAEUSEOBERTEIL | 71.351.1035.3 | 633 |
| GEHAEUSEOBERTEIL | 71.351.1635.0 | 633 |
| GEHAEUSEOBERTEIL | 71.351.1635.1 | 633 |
| GEHAEUSEOBERTEIL | 71.351.1635.2 | 633 |
| GEHAEUSEOBERTEIL | 71.351.1635.3 | 633 |
| GEHAEUSEOBERTEIL | 71.351.2435.0 | 633 |
| GEHAEUSEOBERTEIL | 71.351.2435.1 | 633 |
| GEHAEUSEOBERTEIL | 71.351.2435.2 | 633 |
| GEHAEUSEOBERTEIL | 71.351.2435.3 | 633 |
| GEHAEUSEOBERTEIL | 71.352.1035.0 | 633 |
| GEHAEUSEOBERTEIL | 71.352.1035.1 | 633 |
| GEHAEUSEOBERTEIL | 71.352.1035.2 | 633 |
| GEHAEUSEOBERTEIL | 71.352.1035.3 | 633 |
| GEHAEUSEOBERTEIL | 71.352.1635.0 | 633 |
| GEHAEUSEOBERTEIL | 71.352.1635.1 | 633 |
| GEHAEUSEOBERTEIL | 71.352.1635.2 | 633 |
| GEHAEUSEOBERTEIL | 71.352.1635.3 | 633 |
| GEHAEUSEOBERTEIL | 71.352.2435.0 | 633 |
| GEHAEUSEOBERTEIL | 71.352.2435.1 | 633 |
| GEHAEUSEOBERTEIL | 71.352.2435.2 | 633 |
| GEHAEUSEOBERTEIL | 71.352.2435.3 | 633 |
| GEHAEUSEOBERTEIL | 71.353.1035.0 | 633 |
| GEHAEUSEOBERTEIL | 71.353.1035.1 | 633 |
| GEHAEUSEOBERTEIL | 71.353.1035.2 | 633 |
| GEHAEUSEOBERTEIL | 71.353.1035.3 | 633 |
| GEHAEUSEOBERTEIL | 71.353.1635.0 | 633 |
| GEHAEUSEOBERTEIL | 71.353.1635.1 | 633 |
| GEHAEUSEOBERTEIL | 71.353.1635.2 | 633 |
| GEHAEUSEOBERTEIL | 71.353.1635.3 | 633 |
| GEHAEUSEOBERTEIL | 71.353.2435.0 | 633 |
| GEHAEUSEOBERTEIL | 71.353.2435.1 | 633 |
| GEHAEUSEOBERTEIL | 71.353.2435.2 | 633 |
| GEHAEUSEOBERTEIL | 71.353.2435.3 | 633 |
| GEHAEUSEOBERTEIL | 71.354.1035.0 | 633 |
| GEHAEUSEOBERTEIL | 71.354.1035.1 | 633 |
| GEHAEUSEOBERTEIL | 71.354.1035.2 | 633 |
| GEHAEUSEOBERTEIL | 71.354.1035.3 | 633 |
| GEHAEUSEOBERTEIL | 71.354.1635.0 | 633 |
| GEHAEUSEOBERTEIL | 71.354.1635.1 | 633 |
| GEHAEUSEOBERTEIL | 71.354.1635.2 | 633 |
| GEHAEUSEOBERTEIL | 71.354.1635.3 | 633 |
| GEHAEUSEOBERTEIL | 71.354.2435.0 | 633 |
| GEHAEUSEOBERTEIL | 71.354.2435.1 | 633 |
| GEHAEUSEOBERTEIL | 71.354.2435.2 | 633 |
| GEHAEUSEOBERTEIL | 71.354.2435.3 | 633 |
| GEHAEUSEOBERTEIL | 71.372.1035.0 | 735 |
| GEHAEUSEOBERTEIL | 71.372.1635.0 | 735 |
| GEHAEUSEOBERTEIL | 72.250.1635.2 | 703 |
| GEHAEUSEOBERTEIL | 72.250.2435.2 | 705 |
| GEHAEUSEOBERTEIL | 72.350.0635.0 | 657 |
| GEHAEUSEOBERTEIL | 72.350.0635.1 | 657 |
| GEHAEUSEOBERTEIL | 72.350.0635.2 | 657 |
| GEHAEUSEOBERTEIL | 72.350.0635.3 | 657 |
| GEHAEUSEOBERTEIL | 72.350.1035.0 | 649 |
| GEHAEUSEOBERTEIL | 72.350.1035.1 | 649 |
| GEHAEUSEOBERTEIL | 72.350.1035.2 | 649 |
| GEHAEUSEOBERTEIL | 72.350.1035.3 | 649 |
| GEHAEUSEOBERTEIL | 72.350.1635.0 | 649 |
| GEHAEUSEOBERTEIL | 72.350.1635.1 | 649 |
| GEHAEUSEOBERTEIL | 72.350.1635.2 | 649 |
| GEHAEUSEOBERTEIL | 72.350.1635.3 | 649 |
| GEHAEUSEOBERTEIL | 72.350.2435.0 | 649 |
| GEHAEUSEOBERTEIL | 72.350.2435.1 | 649 |
| GEHAEUSEOBERTEIL | 72.350.2435.2 | 649 |
| GEHAEUSEOBERTEIL | 72.350.2435.3 | 649 |
| GEHAEUSEOBERTEIL | 72.351.0635.0 | 657 |
| GEHAEUSEOBERTEIL | 72.351.0635.1 | 657 |
| GEHAEUSEOBERTEIL | 72.351.0635.2 | 657 |
| GEHAEUSEOBERTEIL | 72.351.0635.3 | 657 |
| GEHAEUSEOBERTEIL | 72.351.1035.0 | 649 |
| GEHAEUSEOBERTEIL | 72.351.1035.1 | 649 |
| GEHAEUSEOBERTEIL | 72.351.1035.2 | 649 |
| GEHAEUSEOBERTEIL | 72.351.1035.3 | 649 |
| GEHAEUSEOBERTEIL | 72.351.1635.0 | 649 |
| GEHAEUSEOBERTEIL | 72.351.1635.1 | 649 |
| GEHAEUSEOBERTEIL | 72.351.1635.2 | 649 |
| GEHAEUSEOBERTEIL | 72.351.1635.3 | 649 |
| GEHAEUSEOBERTEIL | 72.351.2435.0 | 649 |
| GEHAEUSEOBERTEIL | 72.351.2435.1 | 649 |
| GEHAEUSEOBERTEIL | 72.351.2435.2 | 649 |
| GEHAEUSEOBERTEIL | 72.351.2435.3 | 649 |
| GEHAEUSEOBERTEIL | 72.352.0635.0 | 657 |
| GEHAEUSEOBERTEIL | 72.352.0635.1 | 657 |
| GEHAEUSEOBERTEIL | 72.352.0635.2 | 657 |
| GEHAEUSEOBERTEIL | 72.352.0635.3 | 657 |
| GEHAEUSEOBERTEIL | 72.352.1035.0 | 649 |
| GEHAEUSEOBERTEIL | 72.352.1035.1 | 649 |
| GEHAEUSEOBERTEIL | 72.352.1035.2 | 649 |
| GEHAEUSEOBERTEIL | 72.352.1035.3 | 649 |
| GEHAEUSEOBERTEIL | 72.352.1635.0 | 649 |
| GEHAEUSEOBERTEIL | 72.352.1635.1 | 649 |
| GEHAEUSEOBERTEIL | 72.352.1635.2 | 649 |
| GEHAEUSEOBERTEIL | 72.352.1635.3 | 649 |
| GEHAEUSEOBERTEIL | 72.352.2435.0 | 649 |
| GEHAEUSEOBERTEIL | 72.352.2435.1 | 649 |
| GEHAEUSEOBERTEIL | 72.352.2435.2 | 649 |
| GEHAEUSEOBERTEIL | 72.352.2435.3 | 649 |
| GEHAEUSEOBERTEIL | 72.353.2435.0 | 649 |
| GEHAEUSEOBERTEIL | 72.354.2435.0 | 649 |
| GEHAEUSEOBERTEIL | 72.355.1035.0 | 649 |
| GEHAEUSEOBERTEIL | 72.355.1035.1 | 649 |
| GEHAEUSEOBERTEIL | 72.355.1035.2 | 649 |
| GEHAEUSEOBERTEIL | 72.355.1035.3 | 649 |
| GEHAEUSEOBERTEIL | 72.355.1635.0 | 649 |
| GEHAEUSEOBERTEIL | 72.355.1635.1 | 649 |
| GEHAEUSEOBERTEIL | 72.355.1635.2 | 649 |
| GEHAEUSEOBERTEIL | 72.355.1635.3 | 649 |
| GEHAEUSEOBERTEIL | 72.355.2435.0 | 649 |
| GEHAEUSEOBERTEIL | 72.355.2435.1 | 649 |
| GEHAEUSEOBERTEIL | 72.355.2435.2 | 649 |
| GEHAEUSEOBERTEIL | 72.355.2435.3 | 649 |
| GEHAEUSEOBERTEIL | 72.356.1035.0 | 649 |
| GEHAEUSEOBERTEIL | 72.356.1035.1 | 649 |
| GEHAEUSEOBERTEIL | 72.356.1035.2 | 649 |
| GEHAEUSEOBERTEIL | 72.356.1035.3 | 649 |
| GEHAEUSEOBERTEIL | 72.356.1635.0 | 649 |
| GEHAEUSEOBERTEIL | 72.356.1635.1 | 649 |
| GEHAEUSEOBERTEIL | 72.356.1635.2 | 649 |
| GEHAEUSEOBERTEIL | 72.356.1635.3 | 649 |
| GEHAEUSEOBERTEIL | 72.356.2435.0 | 649 |
| GEHAEUSEOBERTEIL | 72.356.2435.1 | 649 |
| GEHAEUSEOBERTEIL | 72.356.2435.2 | 649 |
| GEHAEUSEOBERTEIL | 72.356.2435.3 | 649 |
| GEHAEUSEOBERTEIL | 72.357.1035.0 | 649 |
| GEHAEUSEOBERTEIL | 72.357.1035.1 | 649 |
| GEHAEUSEOBERTEIL | 72.357.1035.2 | 649 |
| GEHAEUSEOBERTEIL | 72.357.1035.3 | 649 |
| GEHAEUSEOBERTEIL | 72.357.1635.0 | 649 |
| GEHAEUSEOBERTEIL | 72.357.1635.1 | 649 |
| GEHAEUSEOBERTEIL | 72.357.1635.2 | 649 |
| GEHAEUSEOBERTEIL | 72.357.1635.3 | 649 |
| GEHAEUSEOBERTEIL | 72.357.2435.0 | 649 |
| GEHAEUSEOBERTEIL | 72.357.2435.1 | 649 |
| GEHAEUSEOBERTEIL | 72.357.2435.2 | 649 |
| GEHAEUSEOBERTEIL | 72.357.2435.3 | 649 |
| GEHAEUSEOBERTEIL | 72.359.2435.0 | 649 |
| GEHAEUSEOBERTEIL | 72.372.1035.0 | 733 |
| GEHAEUSEOBERTEIL | 72.372.1035.3 | 733 |
| GEHAEUSEOBERTEIL | 72.372.1635.0 | 733 |
| GEHAEUSEOBERTEIL | 72.372.1635.3 | 733 |
| GEHAEUSEOBERTEIL | 72.372.2435.0 | 733 |
| GEHAEUSEOBERTEIL | 72.372.2435.3 | 733 |
| GEHAEUSEOBERTEIL | 72.374.2435.3 | 733 |
| GEHAEUSEOBERTEIL | 73.350.4035.0 | 727 |
| GEHAEUSEOBERTEIL | 73.350.4035.1 | 727 |
| GEHAEUSEOBERTEIL | 73.350.4035.2 | 727 |
| GEHAEUSEOBERTEIL | 73.350.4035.3 | 727 |
| GEHAEUSEOBERTEIL | 73.350.6435.0 | 727 |
| GEHAEUSEOBERTEIL | 73.350.6435.1 | 727 |
| GEHAEUSEOBERTEIL | 73.350.6435.2 | 727 |
| GEHAEUSEOBERTEIL | 73.350.6435.3 | 727 |
| GEHAEUSEOBERTEIL | 73.352.4035.0 | 709 |
| GEHAEUSEOBERTEIL | 73.352.4035.1 | 709 |
| GEHAEUSEOBERTEIL | 73.352.4035.2 | 709 |
| GEHAEUSEOBERTEIL | 73.352.4035.3 | 709 |
| GEHAEUSEOBERTEIL | 73.352.6435.0 | 727 |
| GEHAEUSEOBERTEIL | 73.352.6435.1 | 727 |
| GEHAEUSEOBERTEIL | 73.352.6435.2 | 727 |
| GEHAEUSEOBERTEIL | 73.352.6435.3 | 727 |
| GEHAEUSEOBERTEIL | 73.353.1035.0 | 749 |
| GEHAEUSEOBERTEIL | 73.353.1035.1 | 749 |
| GEHAEUSEOBERTEIL | 73.353.1035.2 | 749 |
| GEHAEUSEOBERTEIL | 73.353.4035.0 | 709 |
| GEHAEUSEOBERTEIL | 73.353.4035.1 | 709 |
| GEHAEUSEOBERTEIL | 73.353.4035.2 | 709 |
| GEHAEUSEOBERTEIL | 73.353.4035.3 | 709 |
| GEHAEUSEOBERTEIL | 73.353.6435.0 | 727 |
| GEHAEUSEOBERTEIL | 73.353.6435.1 | 727 |
| GEHAEUSEOBERTEIL | 73.353.6435.2 | 727 |
| GEHAEUSEOBERTEIL | 73.353.6435.3 | 727 |
| GEHAEUSEOBERTEIL | 73.354.1035.0 | 749 |
| GEHAEUSEOBERTEIL | 73.354.1035.1 | 749 |
| GEHAEUSEOBERTEIL | 73.354.1035.2 | 749 |
| GEHAEUSEOBERTEIL | 73.354.4035.0 | 727 |
| GEHAEUSEOBERTEIL | 73.354.6435.0 | 727 |
| GEHAEUSEOBERTEIL | 73.355.4035.0 | 727 |
| GEHAEUSEOBERTEIL | 73.355.4035.1 | 727 |
| GEHAEUSEOBERTEIL | 73.355.4035.2 | 727 |
| GEHAEUSEOBERTEIL | 73.355.4035.3 | 727 |
| GEHAEUSEOBERTEIL | 73.355.6435.0 | 727 |
| GEHAEUSEOBERTEIL | 73.355.6435.1 | 727 |
| GEHAEUSEOBERTEIL | 73.355.6435.2 | 727 |
| GEHAEUSEOBERTEIL | 73.355.6435.3 | 727 |
| GEHAEUSEOBERTEIL | 73.357.4035.0 | 709 |
| GEHAEUSEOBERTEIL | 73.357.4035.1 | 709 |
| GEHAEUSEOBERTEIL | 73.357.4035.2 | 709 |
| GEHAEUSEOBERTEIL | 73.357.4035.3 | 709 |
| GEHAEUSEOBERTEIL | 73.357.6435.0 | 727 |
| GEHAEUSEOBERTEIL | 73.357.6435.1 | 727 |
| GEHAEUSEOBERTEIL | 73.357.6435.2 | 727 |
| GEHAEUSEOBERTEIL | 73.357.6435.3 | 727 |
| GEHAEUSEOBERTEIL | 73.358.4035.0 | 709 |
| GEHAEUSEOBERTEIL | 73.358.4035.1 | 709 |
| GEHAEUSEOBERTEIL | 73.358.4035.2 | 709 |
| GEHAEUSEOBERTEIL | 73.358.4035.3 | 709 |
| GEHAEUSEOBERTEIL | 73.358.6435.0 | 727 |
| GEHAEUSEOBERTEIL | 73.358.6435.1 | 727 |
| GEHAEUSEOBERTEIL | 73.358.6435.2 | 727 |
| GEHAEUSEOBERTEIL | 73.358.6435.3 | 727 |
| GEHAEUSEOBERTEIL | 73.359.4035.0 | 727 |
| GEHAEUSEOBERTEIL | 73.359.6435.0 | 727 |
| GEHAEUSEOBERTEIL | 76.350.0736.0 | 713 |
| GEHAEUSEOBERTEIL | 76.350.0736.1 | 713 |
| GEHAEUSEOBERTEIL | 76.350.0760.1 | 713 |
| GEHAEUSEOBERTEIL | 76.350.1535.0 | 721 |
| GEHAEUSEOBERTEIL | 76.350.1535.2 | 721 |
| GEHAEUSEOBERTEIL | 76.350.2535.0 | 721 |
| GEHAEUSEOBERTEIL | 76.350.2535.2 | 721 |
| GEHAEUSEOBERTEIL | 76.350.4035.0 | 721 |
| GEHAEUSEOBERTEIL | 76.350.4035.1 | 721 |
| GEHAEUSEOBERTEIL | 76.350.4035.2 | 721 |
| GEHAEUSEOBERTEIL | 76.350.4035.3 | 721 |
| GEHAEUSEOBERTEIL | 76.350.6435.0 | 721 |
| GEHAEUSEOBERTEIL | 76.350.6435.1 | 721 |
| GEHAEUSEOBERTEIL | 76.350.6435.2 | 721 |
| GEHAEUSEOBERTEIL | 76.350.6435.3 | 721 |
| GEHAEUSEOBERTEIL | 76.352.0736.0 | 713 |
| GEHAEUSEOBERTEIL | 76.352.0736.1 | 713 |
| GEHAEUSEOBERTEIL | 76.352.0760.1 | 713 |
| GEHAEUSEOBERTEIL | 76.352.1535.0 | 721 |
| GEHAEUSEOBERTEIL | 76.352.1535.1 | 721 |
| GEHAEUSEOBERTEIL | 76.352.1535.2 | 721 |
| GEHAEUSEOBERTEIL | 76.352.2535.0 | 721 |
| GEHAEUSEOBERTEIL | 76.352.2535.1 | 721 |
| GEHAEUSEOBERTEIL | 76.352.2535.2 | 721 |
| GEHAEUSEOBERTEIL | 76.352.4035.0 | 697 |
| GEHAEUSEOBERTEIL | 76.352.4035.1 | 697 |
| GEHAEUSEOBERTEIL | 76.352.4035.2 | 697 |
| GEHAEUSEOBERTEIL | 76.352.4035.3 | 697 |
| GEHAEUSEOBERTEIL | 76.352.6435.0 | 721 |
| GEHAEUSEOBERTEIL | 76.352.6435.1 | 721 |
| GEHAEUSEOBERTEIL | 76.352.6435.2 | 721 |
| GEHAEUSEOBERTEIL | 76.352.6435.3 | 721 |
| GEHAEUSEOBERTEIL | 76.353.1535.0 | 721 |
| GEHAEUSEOBERTEIL | 76.353.1535.2 | 721 |
| GEHAEUSEOBERTEIL | 76.353.2535.0 | 721 |
| GEHAEUSEOBERTEIL | 76.353.2535.2 | 721 |
| GEHAEUSEOBERTEIL | 76.353.4035.0 | 697 |
| GEHAEUSEOBERTEIL | 76.353.4035.1 | 697 |
| GEHAEUSEOBERTEIL | 76.353.4035.2 | 697 |
| GEHAEUSEOBERTEIL | 76.353.4035.3 | 697 |
| GEHAEUSEOBERTEIL | 76.353.6435.0 | 721 |
| GEHAEUSEOBERTEIL | 76.353.6435.1 | 721 |
| GEHAEUSEOBERTEIL | 76.353.6435.2 | 721 |
| GEHAEUSEOBERTEIL | 76.353.6435.3 | 721 |
| GEHAEUSEOBERTEIL | 76.354.1535.0 | 721 |
| GEHAEUSEOBERTEIL | 76.354.1535.1 | 721 |
| GEHAEUSEOBERTEIL | 76.354.1535.2 | 721 |
| GEHAEUSEOBERTEIL | 76.354.2535.0 | 721 |
| GEHAEUSEOBERTEIL | 76.354.2535.1 | 721 |
| GEHAEUSEOBERTEIL | 76.354.2535.2 | 721 |

# contents of type description

# contents TYPE


| Type | Part no. | section / page |
|---|---|---|
| GEHAEUSEOBERTEIL | 76.354.4035.0 | 707 |
| GEHAEUSEOBERTEIL | 76.354.4035.1 | 707 |
| GEHAEUSEOBERTEIL | 76.354.4035.2 | 707 |
| GEHAEUSEOBERTEIL | 76.354.4035.3 | 707 |
| GEHAEUSEOBERTEIL | 76.354.6435.0 | 721 |
| GEHAEUSEOBERTEIL | 76.354.6435.1 | 721 |
| GEHAEUSEOBERTEIL | 76.354.6435.2 | 721 |
| GEHAEUSEOBERTEIL | 76.354.6435.3 | 721 |
| GEHAEUSEOBERTEIL | 76.372.0736.0 | 713 |
| GEHAEUSEOBERTEIL | 76.372.0736.1 | 713 |
| GEHAEUSEOBERTEIL | 76.372.0760.1 | 713 |
| GEHAEUSEOBERTEIL | 77.350.1035.0 | 645 |
| GEHAEUSEOBERTEIL | 77.350.1035.1 | 645 |
| GEHAEUSEOBERTEIL | 77.350.1035.2 | 645 |
| GEHAEUSEOBERTEIL | 77.350.1035.3 | 645 |
| GEHAEUSEOBERTEIL | 77.350.1635.0 | 645 |
| GEHAEUSEOBERTEIL | 77.350.1635.1 | 645 |
| GEHAEUSEOBERTEIL | 77.350.1635.2 | 645 |
| GEHAEUSEOBERTEIL | 77.350.1635.3 | 645 |
| GEHAEUSEOBERTEIL | 77.350.2435.0 | 645 |
| GEHAEUSEOBERTEIL | 77.350.2435.1 | 645 |
| GEHAEUSEOBERTEIL | 77.350.2435.2 | 645 |
| GEHAEUSEOBERTEIL | 77.350.2435.3 | 645 |
| GEHAEUSEOBERTEIL | 77.351.1035.0 | 645 |
| GEHAEUSEOBERTEIL | 77.351.1035.1 | 645 |
| GEHAEUSEOBERTEIL | 77.351.1035.2 | 645 |
| GEHAEUSEOBERTEIL | 77.351.1035.3 | 645 |
| GEHAEUSEOBERTEIL | 77.351.1635.0 | 645 |
| GEHAEUSEOBERTEIL | 77.351.1635.1 | 645 |
| GEHAEUSEOBERTEIL | 77.351.1635.2 | 645 |
| GEHAEUSEOBERTEIL | 77.351.1635.3 | 645 |
| GEHAEUSEOBERTEIL | 77.351.2435.0 | 645 |
| GEHAEUSEOBERTEIL | 77.351.2435.1 | 645 |
| GEHAEUSEOBERTEIL | 77.351.2435.2 | 645 |
| GEHAEUSEOBERTEIL | 77.351.2435.3 | 645 |
| GEHAEUSEOBERTEIL | 77.352.1035.0 | 645 |
| GEHAEUSEOBERTEIL | 77.352.1035.1 | 645 |
| GEHAEUSEOBERTEIL | 77.352.1035.2 | 645 |
| GEHAEUSEOBERTEIL | 77.352.1035.3 | 645 |
| GEHAEUSEOBERTEIL | 77.352.1635.0 | 645 |
| GEHAEUSEOBERTEIL | 77.352.1635.1 | 645 |
| GEHAEUSEOBERTEIL | 77.352.1635.2 | 645 |
| GEHAEUSEOBERTEIL | 77.352.1635.3 | 645 |
| GEHAEUSEOBERTEIL | 77.352.2435.0 | 645 |
| GEHAEUSEOBERTEIL | 77.352.2435.1 | 645 |
| GEHAEUSEOBERTEIL | 77.352.2435.2 | 645 |
| GEHAEUSEOBERTEIL | 77.352.2435.3 | 645 |
| GEHAEUSEOBERTEIL | 77.354.2435.0 | 645 |
| GEHAEUSEOBERTEIL | 77.372.1035.0 | 735 |
| GEHAEUSEOBERTEIL | 77.372.1635.0 | 735 |
| GEHAEUSEOBERTEIL | 77.374.2435.3 | 735 |
| GEHAEUSEOBERTEIL | 99.701.3329.7 | 772 |
| GEHAEUSEOBERTEIL | 99.703.3329.7 | 772 |
| GEHAEUSEOBERTEIL | 99.705.3329.7 | 772 |
| GEHAEUSEOBERTEIL | 99.707.3329.7 | 772 |
| GEHAEUSEOBERTEIL | 99.710.3329.7 | 773 |
| GEHAEUSEOBERTEIL | 99.711.3329.7 | 773 |
| GEHAEUSEOBERTEIL | 99.713.3329.7 | 773 |
| GEHAEUSEOBERTEIL | 99.716.3329.7 | 773 |
| GEHAEUSEOBERTEILE | 70.353.0635.1 | 633 |
| GEHAEUSEUNTERTEIL | 70.320.0628.0 | 634 |
| GEHAEUSEUNTERTEIL | 70.320.0628.9 | 770 |
| GEHAEUSEUNTERTEIL | 70.320.1028.0 | 638 |
| GEHAEUSEUNTERTEIL | 70.320.1028.9 | 770 |
| GEHAEUSEUNTERTEIL | 70.320.1628.0 | 638 |
| GEHAEUSEUNTERTEIL | 70.320.1628.9 | 770 |
| GEHAEUSEUNTERTEIL | 70.320.2428.0 | 638 |
| GEHAEUSEUNTERTEIL | 70.320.2428.9 | 770 |
| GEHAEUSEUNTERTEIL | 70.320.3228.0 | 638 |
| GEHAEUSEUNTERTEIL | 70.320.4828.0 | 634 |
| GEHAEUSEUNTERTEIL | 70.320.4828.9 | 770 |
| GEHAEUSEUNTERTEIL | 70.325.0628.0 | 635 |
| GEHAEUSEUNTERTEIL | 70.325.0628.9 | 771 |
| GEHAEUSEUNTERTEIL | 70.325.1028.0 | 639 |
| GEHAEUSEUNTERTEIL | 70.325.1028.9 | 771 |
| GEHAEUSEUNTERTEIL | 70.325.1628.0 | 639 |
| GEHAEUSEUNTERTEIL | 70.325.1628.9 | 771 |
| GEHAEUSEUNTERTEIL | 70.325.2428.0 | 639 |
| GEHAEUSEUNTERTEIL | 70.325.2428.9 | 771 |
| GEHAEUSEUNTERTEIL | 70.325.4828.0 | 635 |
| GEHAEUSEUNTERTEIL | 70.325.4828.9 | 771 |
| GEHAEUSEUNTERTEIL | 70.330.0628.9 | 770 |
| GEHAEUSEUNTERTEIL | 70.330.0635.0 | 634 |
| GEHAEUSEUNTERTEIL | 70.330.0635.1 | 634 |
| GEHAEUSEUNTERTEIL | 70.330.1028.9 | 770 |
| GEHAEUSEUNTERTEIL | 70.330.1035.0 | 638 |
| GEHAEUSEUNTERTEIL | 70.330.1035.1 | 638 |
| GEHAEUSEUNTERTEIL | 70.330.1635.0 | 638 |
| GEHAEUSEUNTERTEIL | 70.330.1635.1 | 638 |
| GEHAEUSEUNTERTEIL | 70.330.2428.9 | 770 |
| GEHAEUSEUNTERTEIL | 70.330.2435.0 | 638 |
| GEHAEUSEUNTERTEIL | 70.330.2435.1 | 638 |
| GEHAEUSEUNTERTEIL | 70.331.0628.9 | 770 |
| GEHAEUSEUNTERTEIL | 70.331.0635.0 | 634 |
| GEHAEUSEUNTERTEIL | 70.331.0635.1 | 634 |
| GEHAEUSEUNTERTEIL | 70.331.1028.9 | 770 |
| GEHAEUSEUNTERTEIL | 70.331.1035.0 | 638 |
| GEHAEUSEUNTERTEIL | 70.331.1035.1 | 638 |
| GEHAEUSEUNTERTEIL | 70.331.1635.0 | 638 |
| GEHAEUSEUNTERTEIL | 70.331.1635.1 | 638 |
| GEHAEUSEUNTERTEIL | 70.331.2428.9 | 770 |
| GEHAEUSEUNTERTEIL | 70.331.2435.0 | 638 |
| GEHAEUSEUNTERTEIL | 70.331.2435.1 | 638 |
| GEHAEUSEUNTERTEIL | 70.331.4828.9 | 770 |
| GEHAEUSEUNTERTEIL | 70.331.4835.0 | 634 |
| GEHAEUSEUNTERTEIL | 70.331.4835.1 | 634 |
| GEHAEUSEUNTERTEIL | 70.331.4835.3 | 634 |
| GEHAEUSEUNTERTEIL | 70.333.0628.9 | 771 |
| GEHAEUSEUNTERTEIL | 70.333.0635.0 | 635 |
| GEHAEUSEUNTERTEIL | 70.333.0635.1 | 635 |
| GEHAEUSEUNTERTEIL | 70.333.1028.9 | 771 |
| GEHAEUSEUNTERTEIL | 70.333.1035.0 | 639 |
| GEHAEUSEUNTERTEIL | 70.333.1035.1 | 639 |
| GEHAEUSEUNTERTEIL | 70.333.1635.0 | 639 |
| GEHAEUSEUNTERTEIL | 70.333.1635.1 | 639 |
| GEHAEUSEUNTERTEIL | 70.333.2428.9 | 771 |
| GEHAEUSEUNTERTEIL | 70.333.2435.0 | 639 |
| GEHAEUSEUNTERTEIL | 70.333.2435.1 | 639 |
| GEHAEUSEUNTERTEIL | 70.340.0628.9 | 771 |
| GEHAEUSEUNTERTEIL | 70.340.0635.0 | 635 |
| GEHAEUSEUNTERTEIL | 70.340.0635.1 | 635 |
| GEHAEUSEUNTERTEIL | 70.340.1028.9 | 771 |
| GEHAEUSEUNTERTEIL | 70.340.1035.0 | 639 |
| GEHAEUSEUNTERTEIL | 70.340.1035.1 | 639 |
| GEHAEUSEUNTERTEIL | 70.340.1635.0 | 639 |
| GEHAEUSEUNTERTEIL | 70.340.1635.1 | 639 |
| GEHAEUSEUNTERTEIL | 70.340.2428.9 | 771 |
| GEHAEUSEUNTERTEIL | 70.340.2435.0 | 639 |
| GEHAEUSEUNTERTEIL | 70.340.2435.1 | 639 |
| GEHAEUSEUNTERTEIL | 70.341.0628.9 | 771 |
| GEHAEUSEUNTERTEIL | 70.341.0635.0 | 635 |
| GEHAEUSEUNTERTEIL | 70.341.0635.1 | 635 |
| GEHAEUSEUNTERTEIL | 70.341.1028.9 | 771 |
| GEHAEUSEUNTERTEIL | 70.341.1035.0 | 639 |
| GEHAEUSEUNTERTEIL | 70.341.1035.1 | 639 |
| GEHAEUSEUNTERTEIL | 70.341.1635.0 | 639 |
| GEHAEUSEUNTERTEIL | 70.341.1635.1 | 639 |
| GEHAEUSEUNTERTEIL | 70.341.2428.9 | 771 |
| GEHAEUSEUNTERTEIL | 70.341.2435.0 | 639 |
| GEHAEUSEUNTERTEIL | 70.341.2435.1 | 639 |
| GEHAEUSEUNTERTEIL | 70.341.4828.9 | 771 |
| GEHAEUSEUNTERTEIL | 70.341.4835.1 | 635 |
| GEHAEUSEUNTERTEIL | 70.341.4835.3 | 635 |
| GEHAEUSEUNTERTEIL | 70.342.0628.9 | 771 |
| GEHAEUSEUNTERTEIL | 70.342.0635.0 | 635 |
| GEHAEUSEUNTERTEIL | 70.342.0635.1 | 635 |
| GEHAEUSEUNTERTEIL | 70.342.1028.9 | 771 |
| GEHAEUSEUNTERTEIL | 70.342.1035.0 | 639 |
| GEHAEUSEUNTERTEIL | 70.342.1035.1 | 639 |
| GEHAEUSEUNTERTEIL | 70.342.1635.0 | 639 |
| GEHAEUSEUNTERTEIL | 70.342.1635.1 | 639 |
| GEHAEUSEUNTERTEIL | 70.342.2428.9 | 771 |
| GEHAEUSEUNTERTEIL | 70.342.2435.0 | 639 |
| GEHAEUSEUNTERTEIL | 70.342.2435.1 | 639 |
| GEHAEUSEUNTERTEIL | 70.343.0628.9 | 771 |
| GEHAEUSEUNTERTEIL | 70.343.0635.0 | 635 |
| GEHAEUSEUNTERTEIL | 70.343.0635.1 | 635 |
| GEHAEUSEUNTERTEIL | 70.343.1035.0 | 639 |
| GEHAEUSEUNTERTEIL | 70.343.1035.1 | 639 |
| GEHAEUSEUNTERTEIL | 70.343.1635.0 | 639 |
| GEHAEUSEUNTERTEIL | 70.343.1635.1 | 639 |
| GEHAEUSEUNTERTEIL | 70.343.2428.9 | 771 |
| GEHAEUSEUNTERTEIL | 70.343.2435.0 | 639 |
| GEHAEUSEUNTERTEIL | 70.343.2435.1 | 639 |
| GEHAEUSEUNTERTEIL | 70.344.4828.9 | 771 |
| GEHAEUSEUNTERTEIL | 70.344.4835.1 | 635 |
| GEHAEUSEUNTERTEIL | 71.320.1028.0 | 634 |
| GEHAEUSEUNTERTEIL | 71.320.1628.0 | 634 |
| GEHAEUSEUNTERTEIL | 71.320.2428.0 | 634 |
| GEHAEUSEUNTERTEIL | 71.325.1028.0 | 635 |
| GEHAEUSEUNTERTEIL | 71.325.1628.0 | 635 |
| GEHAEUSEUNTERTEIL | 71.325.2428.0 | 635 |
| GEHAEUSEUNTERTEIL | 71.330.1035.0 | 634 |
| GEHAEUSEUNTERTEIL | 71.330.1035.1 | 634 |
| GEHAEUSEUNTERTEIL | 71.330.1635.0 | 634 |
| GEHAEUSEUNTERTEIL | 71.330.1635.1 | 634 |
| GEHAEUSEUNTERTEIL | 71.330.2435.0 | 634 |
| GEHAEUSEUNTERTEIL | 71.330.2435.1 | 634 |
| GEHAEUSEUNTERTEIL | 71.331.1035.0 | 634 |
| GEHAEUSEUNTERTEIL | 71.331.1035.1 | 634 |
| GEHAEUSEUNTERTEIL | 71.331.1635.0 | 634 |
| GEHAEUSEUNTERTEIL | 71.331.1635.1 | 634 |
| GEHAEUSEUNTERTEIL | 71.331.2435.0 | 634 |
| GEHAEUSEUNTERTEIL | 71.331.2435.1 | 634 |
| GEHAEUSEUNTERTEIL | 71.333.1035.0 | 635 |
| GEHAEUSEUNTERTEIL | 71.333.1035.1 | 635 |
| GEHAEUSEUNTERTEIL | 71.333.1635.0 | 635 |
| GEHAEUSEUNTERTEIL | 71.333.1635.1 | 635 |
| GEHAEUSEUNTERTEIL | 71.333.2435.0 | 635 |
| GEHAEUSEUNTERTEIL | 71.333.2435.1 | 635 |
| GEHAEUSEUNTERTEIL | 71.340.1035.0 | 635 |
| GEHAEUSEUNTERTEIL | 71.340.1035.1 | 635 |
| GEHAEUSEUNTERTEIL | 71.340.1635.0 | 635 |
| GEHAEUSEUNTERTEIL | 71.340.1635.1 | 635 |
| GEHAEUSEUNTERTEIL | 71.340.2435.0 | 635 |
| GEHAEUSEUNTERTEIL | 71.340.2435.1 | 635 |
| GEHAEUSEUNTERTEIL | 71.341.1035.0 | 635 |
| GEHAEUSEUNTERTEIL | 71.341.1035.1 | 635 |
| GEHAEUSEUNTERTEIL | 71.341.1635.0 | 635 |
| GEHAEUSEUNTERTEIL | 71.341.1635.1 | 635 |
| GEHAEUSEUNTERTEIL | 71.341.2435.0 | 635 |
| GEHAEUSEUNTERTEIL | 71.341.2435.1 | 635 |
| GEHAEUSEUNTERTEIL | 71.342.1035.0 | 635 |
| GEHAEUSEUNTERTEIL | 71.342.1035.1 | 635 |
| GEHAEUSEUNTERTEIL | 71.342.1635.0 | 635 |
| GEHAEUSEUNTERTEIL | 71.342.1635.1 | 635 |
| GEHAEUSEUNTERTEIL | 71.342.2435.0 | 635 |
| GEHAEUSEUNTERTEIL | 71.342.2435.1 | 635 |
| GEHAEUSEUNTERTEIL | 71.343.1035.0 | 635 |
| GEHAEUSEUNTERTEIL | 71.343.1035.1 | 635 |
| GEHAEUSEUNTERTEIL | 71.343.1635.0 | 635 |
| GEHAEUSEUNTERTEIL | 71.343.1635.1 | 635 |
| GEHAEUSEUNTERTEIL | 71.343.2435.0 | 635 |
| GEHAEUSEUNTERTEIL | 71.343.2435.1 | 635 |
| GEHAEUSEUNTERTEIL | 72.320.0628.0 | 658 |
| GEHAEUSEUNTERTEIL | 72.320.1028.0 | 650 |
| GEHAEUSEUNTERTEIL | 72.320.1628.0 | 650 |
| GEHAEUSEUNTERTEIL | 72.320.2428.0 | 650 |
| GEHAEUSEUNTERTEIL | 72.325.0628.0 | 659 |
| GEHAEUSEUNTERTEIL | 72.325.1028.0 | 651 |
| GEHAEUSEUNTERTEIL | 72.325.1628.0 | 651 |
| GEHAEUSEUNTERTEIL | 72.325.2428.0 | 651 |
| GEHAEUSEUNTERTEIL | 72.330.0635.0 | 658 |
| GEHAEUSEUNTERTEIL | 72.330.0635.1 | 658 |
| GEHAEUSEUNTERTEIL | 72.330.1035.0 | 650 |
| GEHAEUSEUNTERTEIL | 72.330.1035.1 | 650 |
| GEHAEUSEUNTERTEIL | 72.330.1635.0 | 650 |
| GEHAEUSEUNTERTEIL | 72.330.1635.1 | 650 |
| GEHAEUSEUNTERTEIL | 72.330.2435.0 | 650 |
| GEHAEUSEUNTERTEIL | 72.330.2435.1 | 650 |
| GEHAEUSEUNTERTEIL | 72.331.0635.0 | 658 |
| GEHAEUSEUNTERTEIL | 72.331.0635.1 | 658 |
| GEHAEUSEUNTERTEIL | 72.331.1035.0 | 650 |
| GEHAEUSEUNTERTEIL | 72.331.1035.1 | 650 |
| GEHAEUSEUNTERTEIL | 72.331.1635.0 | 650 |
| GEHAEUSEUNTERTEIL | 72.331.1635.1 | 650 |
| GEHAEUSEUNTERTEIL | 72.331.2435.0 | 650 |
| GEHAEUSEUNTERTEIL | 72.331.2435.1 | 650 |
| GEHAEUSEUNTERTEIL | 72.333.0635.0 | 659 |
| GEHAEUSEUNTERTEIL | 72.333.0635.1 | 659 |
| GEHAEUSEUNTERTEIL | 72.333.1035.0 | 651 |
| GEHAEUSEUNTERTEIL | 72.333.1035.1 | 651 |
| GEHAEUSEUNTERTEIL | 72.333.1635.0 | 651 |
| GEHAEUSEUNTERTEIL | 72.333.1635.1 | 651 |
| GEHAEUSEUNTERTEIL | 72.333.2435.0 | 651 |
| GEHAEUSEUNTERTEIL | 72.333.2435.1 | 651 |
| GEHAEUSEUNTERTEIL | 72.340.0635.0 | 659 |
| GEHAEUSEUNTERTEIL | 72.340.0635.1 | 659 |
| GEHAEUSEUNTERTEIL | 72.340.1035.0 | 651 |
| GEHAEUSEUNTERTEIL | 72.340.1035.1 | 651 |
| GEHAEUSEUNTERTEIL | 72.340.1635.0 | 651 |
| GEHAEUSEUNTERTEIL | 72.340.1635.1 | 651 |
| GEHAEUSEUNTERTEIL | 72.340.2435.0 | 651 |
| GEHAEUSEUNTERTEIL | 72.340.2435.1 | 651 |
| GEHAEUSEUNTERTEIL | 72.341.0635.0 | 659 |
| GEHAEUSEUNTERTEIL | 72.341.0635.1 | 659 |
| GEHAEUSEUNTERTEIL | 72.341.1035.0 | 651 |
| GEHAEUSEUNTERTEIL | 72.341.1035.1 | 651 |
| GEHAEUSEUNTERTEIL | 72.341.1635.0 | 651 |
| GEHAEUSEUNTERTEIL | 72.341.1635.1 | 651 |
| GEHAEUSEUNTERTEIL | 72.341.2435.0 | 651 |
| GEHAEUSEUNTERTEIL | 72.341.2435.1 | 651 |
| GEHAEUSEUNTERTEIL | 72.342.0635.0 | 659 |
| GEHAEUSEUNTERTEIL | 72.342.0635.1 | 659 |
| GEHAEUSEUNTERTEIL | 72.342.1035.0 | 651 |
| GEHAEUSEUNTERTEIL | 72.342.1035.1 | 651 |
| GEHAEUSEUNTERTEIL | 72.342.1635.0 | 651 |
| GEHAEUSEUNTERTEIL | 72.342.1635.1 | 651 |
| GEHAEUSEUNTERTEIL | 72.342.2435.0 | 651 |
| GEHAEUSEUNTERTEIL | 72.342.2435.1 | 651 |
| GEHAEUSEUNTERTEIL | 72.343.0635.0 | 659 |
| GEHAEUSEUNTERTEIL | 72.343.0635.1 | 659 |
| GEHAEUSEUNTERTEIL | 72.343.1035.0 | 651 |
| GEHAEUSEUNTERTEIL | 72.343.1035.1 | 651 |
| GEHAEUSEUNTERTEIL | 72.343.1635.0 | 651 |
| GEHAEUSEUNTERTEIL | 72.343.1635.1 | 651 |
| GEHAEUSEUNTERTEIL | 72.343.2435.0 | 651 |
| GEHAEUSEUNTERTEIL | 72.343.2435.1 | 651 |
| GEHAEUSEUNTERTEIL | 73.326.4028.0 | 729 |
| GEHAEUSEUNTERTEIL | 73.326.6428.0 | 729 |
| GEHAEUSEUNTERTEIL | 73.327.4028.0 | 731 |
| GEHAEUSEUNTERTEIL | 73.327.6428.0 | 731 |
| GEHAEUSEUNTERTEIL | 73.330.4035.0 | 729 |
| GEHAEUSEUNTERTEIL | 73.330.4035.1 | 729 |
| GEHAEUSEUNTERTEIL | 73.330.6435.0 | 729 |
| GEHAEUSEUNTERTEIL | 73.330.6435.1 | 729 |
| GEHAEUSEUNTERTEIL | 73.331.4035.0 | 729 |
| GEHAEUSEUNTERTEIL | 73.331.4035.1 | 729 |
| GEHAEUSEUNTERTEIL | 73.331.6435.0 | 729 |
| GEHAEUSEUNTERTEIL | 73.331.6435.1 | 729 |
| GEHAEUSEUNTERTEIL | 73.333.4035.0 | 729 |
| GEHAEUSEUNTERTEIL | 73.333.4035.1 | 729 |
| GEHAEUSEUNTERTEIL | 73.333.6435.0 | 729 |
| GEHAEUSEUNTERTEIL | 73.333.6435.1 | 729 |
| GEHAEUSEUNTERTEIL | 73.334.4035.0 | 638 |
| GEHAEUSEUNTERTEIL | 73.334.4035.1 | 638 |
| GEHAEUSEUNTERTEIL | 73.334.6435.0 | 638 |
| GEHAEUSEUNTERTEIL | 73.334.6435.1 | 638 |
| GEHAEUSEUNTERTEIL | 73.335.4035.0 | 638 |
| GEHAEUSEUNTERTEIL | 73.335.4035.1 | 638 |
| GEHAEUSEUNTERTEIL | 73.335.6435.0 | 638 |
| GEHAEUSEUNTERTEIL | 73.335.6435.1 | 638 |
| GEHAEUSEUNTERTEIL | 73.337.4035.0 | 639 |
| GEHAEUSEUNTERTEIL | 73.337.4035.1 | 639 |
| GEHAEUSEUNTERTEIL | 73.337.6435.0 | 639 |
| GEHAEUSEUNTERTEIL | 73.337.6435.1 | 639 |
| GEHAEUSEUNTERTEIL | 73.340.4035.0 | 731 |
| GEHAEUSEUNTERTEIL | 73.340.4035.1 | 731 |
| GEHAEUSEUNTERTEIL | 73.340.6435.0 | 731 |
| GEHAEUSEUNTERTEIL | 73.340.6435.1 | 731 |
| GEHAEUSEUNTERTEIL | 73.341.4035.0 | 731 |
| GEHAEUSEUNTERTEIL | 73.341.4035.1 | 731 |
| GEHAEUSEUNTERTEIL | 73.341.6435.0 | 731 |
| GEHAEUSEUNTERTEIL | 73.341.6435.1 | 731 |
| GEHAEUSEUNTERTEIL | 73.342.4035.0 | 731 |
| GEHAEUSEUNTERTEIL | 73.342.4035.1 | 731 |
| GEHAEUSEUNTERTEIL | 73.342.6435.0 | 731 |
| GEHAEUSEUNTERTEIL | 73.342.6435.1 | 731 |
| GEHAEUSEUNTERTEIL | 73.343.4035.0 | 731 |
| GEHAEUSEUNTERTEIL | 73.343.4035.1 | 731 |
| GEHAEUSEUNTERTEIL | 73.343.6435.0 | 731 |

# contents


| Type | Part no. | section / page |
|---|---|---|
| GEHAEUSEUNTERTEIL | 73.343.6435.1 | 731 |
| GEHAEUSEUNTERTEIL | 73.344.4035.0 | 639 |
| GEHAEUSEUNTERTEIL | 73.344.4035.1 | 639 |
| GEHAEUSEUNTERTEIL | 73.344.6435.0 | 639 |
| GEHAEUSEUNTERTEIL | 73.344.6435.1 | 639 |
| GEHAEUSEUNTERTEIL | 73.345.4035.0 | 639 |
| GEHAEUSEUNTERTEIL | 73.345.4035.1 | 639 |
| GEHAEUSEUNTERTEIL | 73.345.6435.0 | 639 |
| GEHAEUSEUNTERTEIL | 73.345.6435.1 | 639 |
| GEHAEUSEUNTERTEIL | 73.346.4035.0 | 639 |
| GEHAEUSEUNTERTEIL | 73.346.4035.1 | 639 |
| GEHAEUSEUNTERTEIL | 73.346.6435.0 | 639 |
| GEHAEUSEUNTERTEIL | 73.346.6435.1 | 639 |
| GEHAEUSEUNTERTEIL | 73.347.4035.0 | 639 |
| GEHAEUSEUNTERTEIL | 73.347.4035.1 | 639 |
| GEHAEUSEUNTERTEIL | 73.347.6435.0 | 639 |
| GEHAEUSEUNTERTEIL | 73.347.6435.1 | 639 |
| GEHAEUSEUNTERTEIL | 76.320.0729.0 | 713 |
| GEHAEUSEUNTERTEIL | 76.320.0753.0 | 713 |
| GEHAEUSEUNTERTEIL | 76.320.1528.0 | 723 |
| GEHAEUSEUNTERTEIL | 76.320.2528.0 | 723 |
| GEHAEUSEUNTERTEIL | 76.321.0729.0 | 713 |
| GEHAEUSEUNTERTEIL | 76.321.0753.0 | 713 |
| GEHAEUSEUNTERTEIL | 76.322.0736.0 | 713 |
| GEHAEUSEUNTERTEIL | 76.322.0736.1 | 713 |
| GEHAEUSEUNTERTEIL | 76.322.0760.1 | 713 |
| GEHAEUSEUNTERTEIL | 76.325.1528.0 | 725 |
| GEHAEUSEUNTERTEIL | 76.325.2528.0 | 725 |
| GEHAEUSEUNTERTEIL | 76.326.4028.0 | 723 |
| GEHAEUSEUNTERTEIL | 76.326.6428.0 | 723 |
| GEHAEUSEUNTERTEIL | 76.327.4028.0 | 725 |
| GEHAEUSEUNTERTEIL | 76.327.6428.0 | 725 |
| GEHAEUSEUNTERTEIL | 76.330.1535.0 | 723 |
| GEHAEUSEUNTERTEIL | 76.330.1535.1 | 723 |
| GEHAEUSEUNTERTEIL | 76.330.2535.0 | 723 |
| GEHAEUSEUNTERTEIL | 76.330.2535.1 | 723 |
| GEHAEUSEUNTERTEIL | 76.330.4035.0 | 723 |
| GEHAEUSEUNTERTEIL | 76.330.4035.1 | 723 |
| GEHAEUSEUNTERTEIL | 76.330.6435.0 | 723 |
| GEHAEUSEUNTERTEIL | 76.330.6435.1 | 723 |
| GEHAEUSEUNTERTEIL | 76.331.1535.0 | 723 |
| GEHAEUSEUNTERTEIL | 76.331.1535.1 | 723 |
| GEHAEUSEUNTERTEIL | 76.331.2535.0 | 723 |
| GEHAEUSEUNTERTEIL | 76.331.2535.1 | 723 |
| GEHAEUSEUNTERTEIL | 76.331.4035.0 | 723 |
| GEHAEUSEUNTERTEIL | 76.331.4035.1 | 723 |
| GEHAEUSEUNTERTEIL | 76.331.6435.0 | 723 |
| GEHAEUSEUNTERTEIL | 76.331.6435.1 | 723 |
| GEHAEUSEUNTERTEIL | 76.333.4035.0 | 723 |
| GEHAEUSEUNTERTEIL | 76.333.4035.1 | 723 |
| GEHAEUSEUNTERTEIL | 76.333.6435.0 | 723 |
| GEHAEUSEUNTERTEIL | 76.333.6435.1 | 723 |
| GEHAEUSEUNTERTEIL | 76.334.1535.0 | 723 |
| GEHAEUSEUNTERTEIL | 76.334.1535.1 | 723 |
| GEHAEUSEUNTERTEIL | 76.334.2535.0 | 723 |
| GEHAEUSEUNTERTEIL | 76.334.2535.1 | 723 |
| GEHAEUSEUNTERTEIL | 76.334.4035.0 | 634 |
| GEHAEUSEUNTERTEIL | 76.334.4035.1 | 634 |
| GEHAEUSEUNTERTEIL | 76.334.6435.0 | 634 |
| GEHAEUSEUNTERTEIL | 76.334.6435.1 | 634 |
| GEHAEUSEUNTERTEIL | 76.335.1535.0 | 723 |
| GEHAEUSEUNTERTEIL | 76.335.1535.1 | 723 |
| GEHAEUSEUNTERTEIL | 76.335.2535.0 | 723 |
| GEHAEUSEUNTERTEIL | 76.335.2535.1 | 723 |
| GEHAEUSEUNTERTEIL | 76.335.4035.0 | 634 |
| GEHAEUSEUNTERTEIL | 76.335.4035.1 | 634 |
| GEHAEUSEUNTERTEIL | 76.335.6435.0 | 634 |
| GEHAEUSEUNTERTEIL | 76.335.6435.1 | 634 |
| GEHAEUSEUNTERTEIL | 76.337.4035.0 | 635 |
| GEHAEUSEUNTERTEIL | 76.337.4035.1 | 635 |
| GEHAEUSEUNTERTEIL | 76.337.6435.0 | 635 |
| GEHAEUSEUNTERTEIL | 76.337.6435.1 | 635 |
| GEHAEUSEUNTERTEIL | 76.340.4035.0 | 725 |
| GEHAEUSEUNTERTEIL | 76.340.6435.0 | 725 |
| GEHAEUSEUNTERTEIL | 76.341.4035.0 | 725 |
| GEHAEUSEUNTERTEIL | 76.341.6435.0 | 725 |
| GEHAEUSEUNTERTEIL | 76.342.4035.0 | 725 |
| GEHAEUSEUNTERTEIL | 76.342.6435.0 | 725 |
| GEHAEUSEUNTERTEIL | 76.343.4035.0 | 725 |
| GEHAEUSEUNTERTEIL | 76.343.6435.0 | 725 |
| GEHAEUSEUNTERTEIL | 76.344.4035.0 | 635 |
| GEHAEUSEUNTERTEIL | 76.344.4035.1 | 635 |
| GEHAEUSEUNTERTEIL | 76.344.6435.0 | 635 |
| GEHAEUSEUNTERTEIL | 76.344.6435.1 | 635 |
| GEHAEUSEUNTERTEIL | 76.345.4035.0 | 635 |
| GEHAEUSEUNTERTEIL | 76.345.4035.1 | 635 |
| GEHAEUSEUNTERTEIL | 76.345.6435.0 | 635 |
| GEHAEUSEUNTERTEIL | 76.345.6435.1 | 635 |
| GEHAEUSEUNTERTEIL | 76.346.4035.0 | 635 |
| GEHAEUSEUNTERTEIL | 76.346.4035.1 | 635 |
| GEHAEUSEUNTERTEIL | 76.346.6435.0 | 635 |
| GEHAEUSEUNTERTEIL | 76.346.6435.1 | 635 |
| GEHAEUSEUNTERTEIL | 76.347.4035.0 | 635 |
| GEHAEUSEUNTERTEIL | 76.347.4035.1 | 635 |
| GEHAEUSEUNTERTEIL | 76.347.6435.0 | 635 |
| GEHAEUSEUNTERTEIL | 76.347.6435.1 | 635 |
| GEHAEUSEUNTERTEIL | 77.320.1028.0 | 646 |
| GEHAEUSEUNTERTEIL | 77.320.1628.0 | 646 |
| GEHAEUSEUNTERTEIL | 77.320.2428.0 | 646 |
| GEHAEUSEUNTERTEIL | 77.325.1028.0 | 647 |
| GEHAEUSEUNTERTEIL | 77.325.1628.0 | 647 |
| GEHAEUSEUNTERTEIL | 77.325.2428.0 | 647 |
| GEHAEUSEUNTERTEIL | 77.330.1035.0 | 646 |
| GEHAEUSEUNTERTEIL | 77.330.1035.1 | 646 |
| GEHAEUSEUNTERTEIL | 77.330.1635.0 | 646 |
| GEHAEUSEUNTERTEIL | 77.330.1635.1 | 646 |
| GEHAEUSEUNTERTEIL | 77.330.2435.0 | 646 |

| Type | Part no. | section / page |
|---|---|---|
| GEHAEUSEUNTERTEIL | 77.330.2435.1 | 646 |
| GEHAEUSEUNTERTEIL | 77.331.1035.0 | 646 |
| GEHAEUSEUNTERTEIL | 77.331.1035.1 | 646 |
| GEHAEUSEUNTERTEIL | 77.331.1635.0 | 646 |
| GEHAEUSEUNTERTEIL | 77.331.1635.1 | 646 |
| GEHAEUSEUNTERTEIL | 77.331.2435.0 | 646 |
| GEHAEUSEUNTERTEIL | 77.331.2435.1 | 646 |
| GEHAEUSEUNTERTEIL | 77.333.1035.0 | 647 |
| GEHAEUSEUNTERTEIL | 77.333.1035.1 | 647 |
| GEHAEUSEUNTERTEIL | 77.333.1635.0 | 647 |
| GEHAEUSEUNTERTEIL | 77.333.1635.1 | 647 |
| GEHAEUSEUNTERTEIL | 77.333.2435.0 | 647 |
| GEHAEUSEUNTERTEIL | 77.333.2435.1 | 647 |
| GEHAEUSEUNTERTEIL | 77.340.1035.0 | 647 |
| GEHAEUSEUNTERTEIL | 77.340.1035.1 | 647 |
| GEHAEUSEUNTERTEIL | 77.340.1635.0 | 647 |
| GEHAEUSEUNTERTEIL | 77.340.1635.1 | 647 |
| GEHAEUSEUNTERTEIL | 77.340.2435.0 | 647 |
| GEHAEUSEUNTERTEIL | 77.340.2435.1 | 647 |
| GEHAEUSEUNTERTEIL | 77.341.1035.0 | 647 |
| GEHAEUSEUNTERTEIL | 77.341.1035.1 | 647 |
| GEHAEUSEUNTERTEIL | 77.341.1635.0 | 647 |
| GEHAEUSEUNTERTEIL | 77.341.1635.1 | 647 |
| GEHAEUSEUNTERTEIL | 77.341.2435.0 | 647 |
| GEHAEUSEUNTERTEIL | 77.341.2435.1 | 647 |
| GEHAEUSEUNTERTEIL | 77.342.1035.0 | 647 |
| GEHAEUSEUNTERTEIL | 77.342.1035.1 | 647 |
| GEHAEUSEUNTERTEIL | 77.342.1635.0 | 647 |
| GEHAEUSEUNTERTEIL | 77.342.1635.1 | 647 |
| GEHAEUSEUNTERTEIL | 77.342.2435.0 | 647 |
| GEHAEUSEUNTERTEIL | 77.342.2435.1 | 647 |
| GEHAEUSEUNTERTEIL | 77.343.1035.0 | 647 |
| GEHAEUSEUNTERTEIL | 77.343.1035.1 | 647 |
| GEHAEUSEUNTERTEIL | 77.343.1635.0 | 647 |
| GEHAEUSEUNTERTEIL | 77.343.1635.1 | 647 |
| GEHAEUSEUNTERTEIL | 77.343.2435.0 | 647 |
| GEHAEUSEUNTERTEIL | 77.343.2435.1 | 647 |
| GEHAEUSEUNTERTEIL | 99.700.3329.7 | 773 |
| GEHAEUSEUNTERTEIL | 99.702.3329.7 | 773 |
| GEHAEUSEUNTERTEIL | 99.704.3329.7 | 773 |
| GEHAEUSEUNTERTEIL | 99.706.3329.7 | 773 |
| GLEITMUTTER | 05.516.9510.0 | 215 |
| GRUNDZANGE | 95.101.0800.0 | 291 |
| GRUNDZANGE | 95.101.0800.0 | 631 |
| GRUNDZANGE | 95.101.0800.0 | 798 |
| GUMMISTOPFEN GR. | 05.562.3283.0 | 755 |
| GUMMISTOPFEN KL. | 05.562.3183.0 | 755 |
| HALTEFEDER | 05.549.0500.0 | 128 |
| HALTERAHMEN 10 | Z5.574.1053.0 | 782 |
| HALTERAHMEN 16 | Z5.574.1653.0 | 782 |
| HALTERAHMEN 24 | Z5.574.2453.0 | 782 |
| HALTERAHMEN 2x6 | Z5.574.1253.0 | 782 |
| HALTERAHMEN 6 | Z5.574.0653.0 | 782 |
| HOCHPOL. | 05.502.0000.0 | 683 |
| IN 46228-A35 -18 | 06.600.5027.0 | 796 |
| ISOL.VERB.KAMM | Z7.258.1225.0 | 416 |
| ISOL.VERB.KAMM | Z7.258.1225.0 | 781 |
| ISOL.VERB.KAMM | Z7.258.1325.0 | 781 |
| ISOL.VERB.KAMM | Z7.258.1425.0 | 781 |
| ISOL.VERB.KAMM | Z7.258.1525.0 | 781 |
| ISOL.VERB.KAMM | Z7.258.1625.0 | 781 |
| ISOL.VERB.KAMM | Z7.258.1725.0 | 781 |
| ISOL.VERB.KAMM | Z7.258.1825.0 | 781 |
| ISOL.VERB.KAMM | Z7.258.1925.0 | 781 |
| ISOL.VERB.KAMM | Z7.258.2025.0 | 781 |
| ISOL.VERB.ST. | Z7.258.0225.0 | 204 |
| ISOL.VERB.ST. | Z7.258.0325.0 | 204 |
| ISOL.VERB.ST. | Z7.258.1025.0 | 204 |
| ISOLIERGEHAEUSE | 01.001.5053.0 | 584 |
| ISOLIERGEHAEUSE | 01.001.5153.0 | 584 |
| ISOLIERGEHAEUSE | 01.001.5353.0 | 586 |
| ISOLIERGEHAEUSE | 01.001.5453.0 | 586 |
| ISOLIERGEHAEUSE | 01.001.5653.0 | 588 |
| ISOLIERGEHAEUSE | 01.001.5753.0 | 588 |
| ISOLIERGEHAEUSE | 01.001.5853.0 | 588 |
| ISOLIERGEHAEUSE | 01.001.6553.0 | 590 |
| ISOLIERGEHAEUSE | 01.001.6653.0 | 590 |
| ISOLIERGEHAEUSE | 01.001.6753.0 | 590 |
| IVB 0,5 WK4.. - 2 | Z7.255.0227.0 | 86 |
| IVB 0,5 WK4.. - 3 | Z7.255.0327.0 | 86 |
| IVB 0,5 WK4.. - 4 | Z7.255.0427.0 | 86 |
| IVB 0,5 WK4.. - 5 | Z7.255.0527.0 | 86 |
| IVB 0,5 WK4.. - 6 | Z7.255.0627.0 | 86 |
| IVB 0,5 WK4.. - 7 | Z7.255.0727.0 | 86 |
| IVB 0,5 WK4.. - 8 | Z7.255.0827.0 | 86 |
| IVB 0,5 WK4.. - 9 | Z7.255.0927.0 | 86 |
| IVB 0,5 WK4.. - 10 | Z7.255.1027.0 | 86 |
| IVB 0,5 WK4.. - 11 | Z7.255.1127.0 | 86 |
| IVB 0,5 WK4.. - 12 | Z7.255.1227.0 | 86 |
| IVB 1 WK4.. - 2 | Z7.255.4227.0 | 86 |
| IVB 1 WK4.. - 3 | Z7.255.4327.0 | 86 |
| IVB 1 WK4.. - 4 | Z7.255.4427.0 | 86 |
| IVB 1 WK4.. - 5 | Z7.255.4527.0 | 86 |
| IVB 1 WK4.. - 6 | Z7.255.4627.0 | 86 |
| IVB 1 WK4.. - 7 | Z7.255.4727.0 | 86 |
| IVB 1 WK4.. - 8 | Z7.255.4827.0 | 86 |
| IVB 1 WK4.. - 9 | Z7.255.4927.0 | 86 |
| IVB 1 WK4.. - 10 | Z7.255.5027.0 | 86 |
| IVB 1 WK4.. - 11 | Z7.255.5127.0 | 86 |
| IVB 1 WK4.. - 12 | Z7.255.5227.0 | 86 |
| IVB WK 4/D..- 2 | Z7.281.7227.0 | 112 |
| IVB WK 4/D..- 3 | Z7.281.7327.0 | 112 |
| IVB WK 4/D..- 4 | Z7.281.7427.0 | 162 |
| IVB WK 4/D..- 5 | Z7.281.7527.0 | 162 |
| IVB WK 4/D..- 6 | Z7.281.7627.0 | 162 |
| IVB WK 4/D..- 7 | Z7.281.7727.0 | 162 |
| IVB WK 4/D..- 8 | Z7.281.7827.0 | 162 |

| Type | Part no. | section / page |
|---|---|---|
| IVB WK 4/D..- 9 | Z7.281.7927.0 | 162 |
| IVB WK 4/D..-10 | Z7.281.8027.0 | 162 |
| IVB WK 4/D..-11 | Z7.281.8127.0 | 162 |
| IVB WK 4/D..-12 | Z7.281.8227.0 | 112 |
| IVB WK 4/DEU- 2 | Z7.271.0227.0 | 113 |
| IVB WK 4/DEU- 3 | Z7.271.0327.0 | 113 |
| IVB WK 4/DEU- 4 | Z7.271.0427.0 | 162 |
| IVB WK 4/DEU- 5 | Z7.271.0527.0 | 162 |
| IVB WK 4/DEU- 6 | Z7.271.0627.0 | 162 |
| IVB WK 4/DEU- 7 | Z7.271.0727.0 | 162 |
| IVB WK 4/DEU- 8 | Z7.271.0827.0 | 162 |
| IVB WK 4/DEU- 9 | Z7.271.0927.0 | 162 |
| IVB WK 4/DEU-10 | Z7.271.1027.0 | 162 |
| IVB WK 4/DEU-11 | Z7.271.1127.0 | 162 |
| IVB WK 4/DEU-12 | Z7.271.1227.0 | 113 |
| IVB WK 2,5-3D- 2 | Z7.270.0227.0 | 118 |
| IVB WK 2,5-3D- 3 | Z7.270.0327.0 | 118 |
| IVB WK 2,5-3D- 4 | Z7.270.0427.0 | 162 |
| IVB WK 2,5-3D- 5 | Z7.270.0527.0 | 162 |
| IVB WK 2,5-3D- 6 | Z7.270.0627.0 | 162 |
| IVB WK 2,5-3D- 7 | Z7.270.0727.0 | 162 |
| IVB WK 2,5-3D- 8 | Z7.270.0827.0 | 162 |
| IVB WK 2,5-3D- 9 | Z7.270.0927.0 | 162 |
| IVB WK 2,5-3D- 10 | Z7.270.1027.0 | 162 |
| IVB WK 2,5-3D- 11 | Z7.270.1127.0 | 162 |
| IVB WK 2,5-3D- 12 | Z7.270.1227.0 | 118 |
| IVB WK 2,5-3D- M-70 | Z7.270.0027.0 | 162 |
| IVB WK 2,5-K 6 BLAU | Z7.267.0627.6 | 160 |
| IVB WK 2,5-K 6 BLAU | Z7.267.1127.6 | 160 |
| IVB WK 2,5-K 6 ROT | Z7.267.0627.5 | 160 |
| IVB WK 2,5-K 7 BLAU | Z7.267.0727.6 | 160 |
| IVB WK 2,5-K 7 ROT | Z7.267.0727.5 | 160 |
| IVB WK 2,5-K 9 BLAU | Z7.267.0927.6 | 160 |
| IVB WK 2,5-K 9 ROT | Z7.267.0927.5 | 160 |
| IVB WK 2,5-K 11 ROT | Z7.267.1127.5 | 160 |
| IVB WK 2,5-K- 2 BLAU | Z7.267.0227.6 | 118 |
| IVB WK 2,5-K- 2 ROT | Z7.267.0227.5 | 118 |
| IVB WK 2,5-K- 3 BLAU | Z7.267.0327.6 | 160 |
| IVB WK 2,5-K- 3 ROT | Z7.267.0327.5 | 160 |
| IVB WK 2,5-K- 4 BLAU | Z7.267.0427.6 | 160 |
| IVB WK 2,5-K- 4 ROT | Z7.267.0427.5 | 160 |
| IVB WK 2,5-K- 5 BLAU | Z7.267.0527.6 | 160 |
| IVB WK 2,5-K- 5 ROT | Z7.267.0527.5 | 160 |
| IVB WK 2,5-K- 8 BLAU | Z7.267.0827.6 | 160 |
| IVB WK 2,5-K- 8 ROT | Z7.267.0827.5 | 160 |
| IVB WK 2,5-K- 10 BLAU | Z7.267.1027.6 | 160 |
| IVB WK 2,5-K- 10 ROT | Z7.267.1027.5 | 160 |
| IVB WK 2,5-K- 12 BLAU | Z7.267.1227.6 | 118 |
| IVB WK 2,5-K- 12 ROT | Z7.267.1227.5 | 118 |
| IVB WK 2,5-K-M-70 BLAU | Z7.267.0027.6 | 160 |
| IVB WK 2,5-K-M-70 ROT | Z7.267.0027.5 | 160 |
| IVB WK4 E - 2 | Z7.255.2227.0 | 114 |
| IVB WK4 E - 3 | Z7.255.2327.0 | 160 |
| IVB WK4 E - 4 | Z7.255.2427.0 | 160 |
| IVB WK4 E - 5 | Z7.255.2527.0 | 160 |
| IVB WK4 E - 6 | Z7.255.2627.0 | 114 |
| IVB WK4 E - 7 | Z7.255.2727.0 | 160 |
| IVB WK4 E - 8 | Z7.255.2827.0 | 160 |
| IVB WK4 E - 9 | Z7.255.2927.0 | 160 |
| IVB WK4 E - 10 | Z7.255.3027.0 | 160 |
| IVB WK4 E - 11 | Z7.255.3127.0 | 160 |
| IVB WK4 E - 12 | Z7.255.3227.0 | 160 |
| IVB WK4 E/U- 2 | Z7.271.2227.0 | 145 |
| IVB WK4 E/U- 3 | Z7.271.2327.0 | 145 |
| IVB WK4 E/U- 4 | Z7.271.2427.0 | 162 |
| IVB WK4 E/U- 5 | Z7.271.2527.0 | 162 |
| IVB WK4 E/U- 6 | Z7.271.2627.0 | 162 |
| IVB WK4 E/U- 7 | Z7.271.2727.0 | 162 |
| IVB WK4 E/U- 8 | Z7.271.2827.0 | 162 |
| IVB WK4 E/U- 9 | Z7.271.2927.0 | 162 |
| IVB WK4 E/U-10 | Z7.271.3027.0 | 162 |
| IVB WK4 E/U-11 | Z7.271.3127.0 | 162 |
| IVB WK4 E/U-12 | Z7.271.3227.0 | 145 |
| IVB WKI4 - 2 | Z7.271.4227.0 | 139 |
| IVB WKI4 - 3 | Z7.271.4327.0 | 139 |
| IVB WKI4 -12 | Z7.271.5227.0 | 69 |
| IVB WKIF 16-2 | Z7.284.6227.0 | 25 |
| IVBS WK4 E - 2 | Z7.256.4227.0 | 114 |
| IVBS WK4 E - 3 | Z7.256.4327.0 | 160 |
| IVBS WK4 E - 4 | Z7.256.4427.0 | 160 |
| IVBS WK4 E - 5 | Z7.256.4527.0 | 160 |
| IVBS WK4 E - 6 | Z7.256.4627.0 | 114 |
| IVBS WK4 E - 7 | Z7.256.4727.0 | 160 |
| IVBS WK4 E - 8 | Z7.256.4827.0 | 160 |
| IVBS WK4 E - 9 | Z7.256.4927.0 | 160 |
| IVBS WK4 E - 10 | Z7.256.5027.0 | 160 |
| IVBS WK4 E - 11 | Z7.256.5127.0 | 160 |
| IVBS WK4 E - 12 | Z7.256.5227.0 | 160 |
| IVBWK 2,5 - 2 | Z7.280.2227.0 | 102 |
| IVBWK 2,5 - 2 | Z7.280.2227.0 | 310 |
| IVBWK 2,5 - 3 | Z7.280.2327.0 | 310 |
| IVBWK 2,5 - 3 | Z7.280.2327.0 | 102 |
| IVBWK 2,5 - 4 | Z7.280.2427.0 | 162 |
| IVBWK 2,5 - 5 | Z7.280.2527.0 | 162 |
| IVBWK 2,5 - 6 | Z7.280.2627.0 | 162 |
| IVBWK 2,5 - 7 | Z7.280.2727.0 | 162 |
| IVBWK 2,5 - 8 | Z7.280.2827.0 | 162 |
| IVBWK 2,5 - 9 | Z7.280.2927.0 | 162 |
| IVBWK 2,5 -10 | Z7.280.3027.0 | 162 |
| IVBWK 2,5 -11 | Z7.280.3127.0 | 162 |
| IVBWK 2,5 -12 | Z7.280.3227.0 | 310 |
| IVBWK 2,5 -12 | Z7.280.3227.0 | 102 |
| IVBWK 4 - 2 | Z7.281.1227.0 | 78 |
| IVBWK 4 - 3 | Z7.281.1327.0 | 78 |
| IVBWK 4 - 4 | Z7.281.1427.0 | 78 |
| IVBWK 4 - 5 | Z7.281.1527.0 | 78 |
| IVBWK 4 - 6 | Z7.281.1627.0 | 78 |

# contents of type description

# contents TYPE


| Type | Part no. | section / page |
|---|---|---|
| IVBWK 4 - 7 | Z7.281.1727.0 | 87 |
| IVBWK 4 - 8 | Z7.281.1827.0 | 87 |
| IVBWK 4 - 9 | Z7.281.1927.0 | 87 |
| IVBWK 4 -10 | Z7.281.2027.0 | 87 |
| IVBWK 4 -11 | Z7.281.2127.0 | 87 |
| IVBWK 4 -12 | Z7.281.2227.0 | 87 |
| IVBWK 6 - 2 | Z7.282.2227.0 | 103 |
| IVBWK 6 - 3 | Z7.282.2327.0 | 101 |
| IVBWK 6 - 4 | Z7.282.2427.0 | 163 |
| IVBWK 6 - 5 | Z7.282.2527.0 | 163 |
| IVBWK 6 - 6 | Z7.282.2627.0 | 163 |
| IVBWK 6 - 7 | Z7.282.2727.0 | 163 |
| IVBWK 6 - 8 | Z7.282.2827.0 | 163 |
| IVBWK 6 - 9 | Z7.282.2927.0 | 163 |
| IVBWK 6 -10 | Z7.282.3027.0 | 163 |
| IVBWK 6 -11 | Z7.282.3127.0 | 163 |
| IVBWK 6 -12 | Z7.282.3227.0 | 103 |
| IVBWK 10 - 4 | Z7.283.2427.0 | 78 |
| IVBWKF 2,5 - 2 | Z7.280.6227.0 | 19 |
| IVBWKF 2,5 - 2 | Z7.280.6227.0 | 308 |
| IVBWKF 2,5 - 3 | Z7.280.6327.0 | 308 |
| IVBWKF 2,5 - 3 | Z7.280.6327.0 | 19 |
| IVBWKF 2,5 - 4 | Z7.280.6427.0 | 308 |
| IVBWKF 2,5 - 4 | Z7.280.6427.0 | 20 |
| IVBWKF 2,5 - 5 | Z7.280.6527.0 | 20 |
| IVBWKF 2,5 - 5 | Z7.280.6527.0 | 308 |
| IVBWKF 2,5 - 6 | Z7.280.6627.0 | 20 |
| IVBWKF 2,5 - 6 | Z7.280.6627.0 | 308 |
| IVBWKF 2,5 - 7 | Z7.280.6727.0 | 308 |
| IVBWKF 2,5 - 7 | Z7.280.6727.0 | 19 |
| IVBWKF 2,5 - 8 | Z7.280.6827.0 | 308 |
| IVBWKF 2,5 - 8 | Z7.280.6827.0 | 20 |
| IVBWKF 2,5 - 9 | Z7.280.6927.0 | 20 |
| IVBWKF 2,5 - 9 | Z7.280.6927.0 | 308 |
| IVBWKF 2,5 - 10 | Z7.280.7027.0 | 20 |
| IVBWKF 2,5 - 10 | Z7.280.7027.0 | 308 |
| IVBWKF 4 - 2 | Z7.261.1227.0 | 20 |
| IVBWKF 4 - 10 | Z7.261.2027.0 | 20 |
| IVBWKF 10- 2 | Z7.283.8227.0 | 21 |
| IVBWKF 16- 2 | Z7.284.4227.0 | 21 |
| IVBWKF 4 - 3 | Z7.261.1327.0 | 20 |
| IVBWKF 4 - 4 | Z7.261.1427.0 | 20 |
| IVBWKF 4 - 5 | Z7.261.1527.0 | 20 |
| IVBWKF 4 - 6 | Z7.261.1627.0 | 20 |
| IVBWKF 4 - 7 | Z7.261.1727.0 | 20 |
| IVBWKF 4 - 8 | Z7.261.1827.0 | 20 |
| IVBWKF 4 - 9 | Z7.261.1927.0 | 20 |
| IVBWKF 6- 2 | Z7.282.4227.0 | 21 |
| IVBWKI35 - 2 | Z7.285.4227.0 | 79 |
| IVBWKI35 - 3 | Z7.285.4327.0 | 79 |
| IVBWKI35 - 4 | Z7.285.4427.0 | 79 |
| IVBWKI35 - 5 | Z7.285.4527.0 | 79 |
| IVBWKI35 - 6 | Z7.285.4627.0 | 79 |
| IVBWKN10 - 2 | Z7.283.2227.0 | 78 |
| IVBWKN10 - 3 | Z7.283.2327.0 | 78 |
| IVBWKN10 - 5 | Z7.283.2527.0 | 78 |
| IVBWKN10 - 6 | Z7.283.2627.0 | 78 |
| IVBWKN10 - 7 | Z7.283.2727.0 | 163 |
| IVBWKN10 - 8 | Z7.283.2827.0 | 163 |
| IVBWKN10 - 9 | Z7.283.2927.0 | 163 |
| IVBWKN10 -10 | Z7.283.3027.0 | 163 |
| IVBWKN10 -11 | Z7.283.3127.0 | 163 |
| IVBWKN10 -12 | Z7.283.3227.0 | 103 |
| IVBWKN16 - 2 | Z7.284.2227.0 | 104 |
| IVBWKN16 - 3 | Z7.284.2327.0 | 104 |
| IVBWKN16 - 4 | Z7.284.2427.0 | 163 |
| IVBWKN16 - 5 | Z7.284.2527.0 | 163 |
| IVBWKN16 - 6 | Z7.284.2627.0 | 163 |
| IVBWKN16 - 7 | Z7.284.2727.0 | 163 |
| IVBWKN16 - 8 | Z7.284.2827.0 | 163 |
| IVBWKN16 - 9 | Z7.284.2927.0 | 163 |
| IVBWKN16 - M-30 | Z7.284.2027.0 | 163 |
| IVBWKN16 -10 | Z7.284.3027.0 | 163 |
| IVBWKN16 -11 | Z7.284.3127.0 | 163 |
| IVBWKN16 -12 | Z7.284.3227.0 | 104 |
| IVBWKN35 - 2 | Z7.285.2227.0 | 105 |
| IVBWKN35 - 3 | Z7.285.2327.0 | 105 |
| IVBWKN35 - 4 | Z7.285.2427.0 | 163 |
| IVBWKN35 - 5 | Z7.285.2527.0 | 163 |
| IVBWKN35 - 6 | Z7.285.2627.0 | 163 |
| IVBWKN35 - 7 | Z7.285.2727.0 | 163 |
| IVBWKN35 - 8 | Z7.285.2827.0 | 163 |
| IVBWKN35 - 9 | Z7.285.2927.0 | 163 |
| IVBWKN35 - M-20 | Z7.285.2027.0 | 163 |
| IVBWKN35 -10 | Z7.285.3027.0 | 163 |
| IVBWKN35 -11 | Z7.285.3127.0 | 163 |
| IVBWKN35 -12 | Z7.285.3227.0 | 105 |
| IVK WK 4/DEU- 2 | Z7.256.2227.0 | 112 |
| IVK WK 4/DEU- 6 | Z7.256.2627.0 | 112 |
| K 15,5 - 20,5 | Z2.803.2228.0 | 210 |
| K 19 - 27 | Z2.803.2328.0 | 210 |
| K 26 - 34 | Z2.803.2428.0 | 210 |
| KABELVERSCHRB. | Z5.507.1321.0 | 776 |
| KABELVERSCHRB. | Z5.507.1521.0 | 776 |
| KABELVERSCHRB. | Z5.507.1721.0 | 776 |
| KB 1 RM 5.08 | Z8.000.0103.4 | 460 |
| KBD 1 / 2 KR | 28.121.0240.0 | 266 |
| KBD 1 / 3 KR | 28.121.0340.0 | 266 |
| KBD 1 / 4 KR | 28.121.0440.0 | 266 |
| KBD 1 / 5 KR | 28.121.0540.0 | 266 |
| KBD 1 / 6 KR | 28.121.0640.0 | 266 |
| KBD 1 / 8 KR | 28.121.0840.0 | 266 |
| KBD 1 /10 KR | 28.121.1040.0 | 266 |
| KBD 1 /12 KR | 28.121.1240.0 | 266 |
| KL 16 / 12 PA | 29.400.1253.0 | 256 |
| KL 16 / 12 PA DS | 29.401.1253.0 | 256 |
| KL 16 / 16 PA | 29.400.1653.0 | 256 |
| KL 16 / 16 PA DS | 29.401.1653.0 | 256 |
| KL 16 / 20 PA | 29.400.2053.0 | 256 |
| KL 16 / 20 PA DS | 29.401.2053.0 | 256 |
| KL 16 / 4 PA | 29.400.0453.0 | 256 |
| KL 16 / 4 PA DS | 29.401.0453.0 | 256 |
| KL 16 / 6 PA | 29.400.0653.0 | 256 |
| KL 16 / 6 PA DS | 29.401.0653.0 | 256 |
| KL 16 / 8 PA | 29.400.0853.0 | 256 |
| KL 16 / 8 PA DS | 29.401.0853.0 | 256 |
| KL 20 / 2 DS PA | 29.500.1253.0 | 264 |
| KL 20 / 2 PA | 29.500.0253.0 | 264 |
| KL 20 / 4 DS PA | 29.500.1353.0 | 264 |
| KL 20 / 4 PA | 29.500.0353.0 | 264 |
| KL 24 / 2 | 29.500.9253.0 | 265 |
| KL 24 / 3 | 29.500.9353.0 | 265 |
| KL 24 / 3 SL | 29.502.9353.0 | 265 |
| KL 24 / 4 | 29.500.9453.0 | 265 |
| KL 24 / 5 | 29.500.9553.0 | 265 |
| KL 24 / 5 SL | 29.502.9553.0 | 265 |
| KL 28 / 6 DS PA | 33.011.0653.0 | 214 |
| KL 29 / 6 DS PA | 33.041.0653.0 | 214 |
| KL 30 / 3 DS PA | 29.500.4053.0 | 265 |
| KL 30 / 3 PA | 29.500.3053.0 | 265 |
| KL 58 / 3 / 1 | 29.130.1353.0 | 268 |
| KL 58 / 3 S / 1 | 29.131.1353.0 | 269 |
| KL 58 / 3 S R / 1 | 29.131.2353.0 | 269 |
| KL 58 / 5 / 1 | 29.130.1553.0 | 268 |
| KL 58 / 5 S / 1 | 29.131.1553.0 | 269 |
| KL 58 / 5 S R / 1 | 29.131.2553.0 | 269 |
| KL 58 / 6 / 1 | 29.130.1653.0 | 268 |
| KL 58 / 6 S / 1 | 29.131.1653.0 | 269 |
| KL 58 / 6 S R / 1 | 29.131.2653.0 | 269 |
| KL.ADA. BU. 3WL | 70.120.0353.3 | 643 |
| KL.ADA. BU. 3WL | 70.120.0353.4 | 643 |
| KL.ADA. BU. 3WR | 70.125.0353.3 | 643 |
| KL.ADA. BU. 3WR | 70.125.0353.4 | 643 |
| KL.ADA. BU. 6WL | 70.000.0653.0 | 689 |
| KL.ADA. BU. 6WL | 70.100.0653.3 | 631 |
| KL.ADA. BU. 6WL | 70.100.0653.4 | 631 |
| KL.ADA. BU. 6WL | 70.120.0653.3 | 643 |
| KL.ADA. BU. 6WL | 70.120.0653.4 | 643 |
| KL.ADA. BU. 6WL | 72.000.0653.0 | 693 |
| KL.ADA. BU. 6WL | 72.100.0653.0 | 655 |
| KL.ADA. BU. 6WL | 72.100.0653.4 | 655 |
| KL.ADA. BU. 6WR | 70.005.0653.0 | 689 |
| KL.ADA. BU. 6WR | 70.105.0653.3 | 631 |
| KL.ADA. BU. 6WR | 70.105.0653.4 | 631 |
| KL.ADA. BU. 6WR | 70.125.0653.3 | 643 |
| KL.ADA. BU. 6WR | 70.125.0653.4 | 643 |
| KL.ADA. BU. 6WR | 72.005.0653.0 | 693 |
| KL.ADA. BU. 6WR | 72.105.0653.0 | 655 |
| KL.ADA. BU. 6WR | 72.105.0653.4 | 655 |
| KL.ADA. BU.10WL | 70.100.1053.3 | 631 |
| KL.ADA. BU.10WL | 70.100.1053.4 | 631 |
| KL.ADA. BU.10WL | 70.120.1053.3 | 643 |
| KL.ADA. BU.10WL | 70.120.1053.4 | 643 |
| KL.ADA. BU.10WL | 72.100.1053.0 | 655 |
| KL.ADA. BU.10WL | 72.100.1053.4 | 655 |
| KL.ADA. BU.10WR | 70.105.1053.3 | 631 |
| KL.ADA. BU.10WR | 70.105.1053.4 | 631 |
| KL.ADA. BU.10WR | 70.125.1053.3 | 643 |
| KL.ADA. BU.10WR | 70.125.1053.4 | 643 |
| KL.ADA. BU.10WR | 72.105.1053.0 | 655 |
| KL.ADA. BU.10WR | 72.105.1053.4 | 655 |
| KL.ADA. BU.16WL | 70.100.1653.3 | 631 |
| KL.ADA. BU.16WL | 70.100.1653.4 | 631 |
| KL.ADA. BU.16WL | 72.100.1653.0 | 655 |
| KL.ADA. BU.16WL | 72.100.1653.4 | 655 |
| KL.ADA. BU.16WR | 70.105.1653.3 | 631 |
| KL.ADA. BU.16WR | 70.105.1653.4 | 631 |
| KL.ADA. BU.16WR | 72.105.1653.0 | 655 |
| KL.ADA. BU.16WR | 72.105.1653.4 | 655 |
| KL.ADA. BU.24WL | 70.100.2453.3 | 631 |
| KL.ADA. BU.24WL | 70.100.2453.4 | 631 |
| KL.ADA. BU.24WL | 72.100.2453.0 | 655 |
| KL.ADA. BU.24WL | 72.100.2453.4 | 655 |
| KL.ADA. BU.24WR | 70.105.2453.3 | 631 |
| KL.ADA. BU.24WR | 70.105.2453.4 | 631 |
| KL.ADA. BU.24WR | 72.105.2453.0 | 655 |
| KL.ADA. BU.24WR | 72.105.2453.4 | 655 |
| KL.ADA. BU.40WL | 73.100.4053.0 | 719 |
| KL.ADA. BU.40WR | 73.105.4053.0 | 719 |
| KL.ADA. BU.64WL | 73.100.6453.0 | 719 |
| KL.ADA. BU.64WR | 73.105.6453.0 | 719 |
| KL.ADA. BUF 6WL | 70.101.0653.0 | 631 |
| KL.ADA. BUF 6WR | 70.106.0653.0 | 631 |
| KL.ADA. BUF10WL | 70.101.1053.0 | 631 |
| KL.ADA. BUF10WR | 70.106.1053.0 | 631 |
| KL.ADA. BUF16WL | 70.101.1653.0 | 631 |
| KL.ADA. BUF16WR | 70.106.1653.0 | 631 |
| KL.ADA. BUF24WL | 70.101.2453.0 | 631 |
| KL.ADA. BUF24WR | 70.106.2453.0 | 631 |
| KL.ADA. ST. 3WL | 70.130.0353.3 | 643 |
| KL.ADA. ST. 3WL | 70.130.0353.4 | 643 |
| KL.ADA. ST. 3WR | 70.135.0353.3 | 643 |
| KL.ADA. ST. 3WR | 70.135.0353.4 | 643 |
| KL.ADA. ST. 6WL | 70.010.0653.0 | 689 |
| KL.ADA. ST. 6WL | 70.110.0653.3 | 631 |
| KL.ADA. ST. 6WL | 70.110.0653.4 | 631 |
| KL.ADA. ST. 6WL | 70.130.0653.3 | 643 |
| KL.ADA. ST. 6WL | 70.130.0653.4 | 643 |
| KL.ADA. ST. 6WL | 72.010.0653.0 | 693 |
| KL.ADA. ST. 6WL | 72.110.0653.0 | 655 |
| KL.ADA. ST. 6WL | 72.110.0653.4 | 655 |
| KL.ADA. ST. 6WR | 70.015.0653.0 | 689 |
| KL.ADA. ST. 6WR | 70.115.0653.3 | 631 |
| KL.ADA. ST. 6WR | 70.115.0653.4 | 631 |
| KL.ADA. ST. 6WR | 70.135.0653.3 | 643 |
| KL.ADA. ST. 6WR | 70.135.0653.4 | 643 |
| KL.ADA. ST. 6WR | 72.015.0653.0 | 693 |
| KL.ADA. ST. 6WR | 72.115.0653.0 | 655 |
| KL.ADA. ST. 6WR | 72.115.0653.4 | 655 |
| KL.ADA. ST.10WL | 70.110.1053.3 | 631 |
| KL.ADA. ST.10WL | 70.110.1053.4 | 631 |
| KL.ADA. ST.10WL | 70.130.1053.3 | 643 |
| KL.ADA. ST.10WL | 70.130.1053.4 | 643 |
| KL.ADA. ST.10WL | 72.110.1053.0 | 655 |
| KL.ADA. ST.10WL | 72.110.1053.4 | 655 |
| KL.ADA. ST.10WR | 70.115.1053.3 | 631 |
| KL.ADA. ST.10WR | 70.115.1053.4 | 631 |
| KL.ADA. ST.10WR | 70.135.1053.3 | 643 |
| KL.ADA. ST.10WR | 70.135.1053.4 | 643 |
| KL.ADA. ST.10WR | 72.115.1053.0 | 655 |
| KL.ADA. ST.10WR | 72.115.1053.4 | 655 |
| KL.ADA. ST.16WL | 70.110.1653.3 | 631 |
| KL.ADA. ST.16WL | 70.110.1653.4 | 631 |
| KL.ADA. ST.16WL | 72.110.1653.0 | 655 |
| KL.ADA. ST.16WL | 72.110.1653.4 | 655 |
| KL.ADA. ST.16WR | 70.115.1653.3 | 631 |
| KL.ADA. ST.16WR | 70.115.1653.4 | 631 |
| KL.ADA. ST.16WR | 72.115.1653.0 | 655 |
| KL.ADA. ST.16WR | 72.115.1653.4 | 655 |
| KL.ADA. ST.24WL | 70.110.2453.3 | 631 |
| KL.ADA. ST.24WL | 70.110.2453.4 | 631 |
| KL.ADA. ST.24WL | 72.110.2453.0 | 655 |
| KL.ADA. ST.24WL | 72.110.2453.4 | 655 |
| KL.ADA. ST.24WR | 70.115.2453.3 | 631 |
| KL.ADA. ST.24WR | 70.115.2453.4 | 631 |
| KL.ADA. ST.24WR | 72.115.2453.0 | 655 |
| KL.ADA. ST.24WR | 72.115.2453.4 | 655 |
| KL.ADA. ST.40WL | 73.110.4053.0 | 719 |
| KL.ADA. ST.40WR | 73.115.4053.0 | 719 |
| KL.ADA. ST.64WL | 73.110.6453.0 | 719 |
| KL.ADA. ST.64WR | 73.115.6453.0 | 719 |
| KL.ADA. STF 6WL | 70.111.0653.0 | 631 |
| KL.ADA. STF 6WR | 70.116.0653.0 | 631 |
| KL.ADA. STF10WL | 70.111.1053.0 | 631 |
| KL.ADA. STF10WL | 70.111.1653.0 | 631 |
| KL.ADA. STF10WR | 70.116.1053.0 | 631 |
| KL.ADA. STF16WR | 70.116.1653.0 | 631 |
| KL.ADA. STF24WL | 70.111.2453.0 | 631 |
| KL.ADA. STF24WR | 70.116.2453.0 | 631 |
| KL.ADA. BU.4/6WR | 72.107.1053.0 | 699 |
| KL.ADA. ST.4/6WR | 72.117.1053.0 | 699 |
| KL.ADAP.BUF 3P WL | 70.121.0353.0 | 643 |
| KL.ADAP.BUF 3P WR | 70.126.0353.0 | 643 |
| KL.ADAP.BUF 3P WR | 70.136.0653.0 | 643 |
| KL.ADAP.BUF 3P WR | 70.136.1053.0 | 643 |
| KL.ADAP.BUF 6P WL | 70.121.0653.0 | 643 |
| KL.ADAP.BUF 6P WL | 72.101.0653.0 | 655 |
| KL.ADAP.BUF 6P WR | 70.126.0653.0 | 643 |
| KL.ADAP.BUF 6P WR | 72.106.0653.0 | 655 |
| KL.ADAP.BUF10P WL | 70.121.1053.0 | 643 |
| KL.ADAP.BUF10P WL | 72.101.1053.0 | 655 |
| KL.ADAP.BUF10P WR | 70.126.1053.0 | 643 |
| KL.ADAP.BUF10P WR | 72.106.1053.0 | 655 |
| KL.ADAP.BUF16P WL | 72.101.1653.0 | 655 |
| KL.ADAP.BUF16P WR | 72.106.1653.0 | 655 |
| KL.ADAP.BUF24P WL | 72.101.2453.0 | 655 |
| KL.ADAP.BUF24P WR | 72.106.2453.0 | 655 |
| KL.ADAP.STF 3P WL | 70.131.0353.0 | 643 |
| KL.ADAP.STF 3P WR | 70.136.0353.0 | 643 |
| KL.ADAP.STF 6P WL | 70.131.0653.0 | 643 |
| KL.ADAP.STF 6P WL | 72.111.0653.0 | 655 |
| KL.ADAP.STF 6P WR | 72.116.0653.0 | 655 |
| KL.ADAP.STF10P WL | 70.131.1053.0 | 643 |
| KL.ADAP.STF10P WL | 72.111.1053.0 | 655 |
| KL.ADAP.STF10P WR | 72.116.1053.0 | 655 |
| KL.ADAP.STF16P WL | 72.111.1653.0 | 655 |
| KL.ADAP.STF16P WR | 72.116.1653.0 | 655 |
| KL.ADAP.STF24P WL | 72.111.2453.0 | 655 |
| KL.ADAP.STF24P WR | 72.116.2453.0 | 655 |
| KL.LST.BEZ. TS15 | Z7.311.2753.0 | 167 |
| KL17 N/ 1 /S6,3 | 29.608.0153.0 | 267 |
| KL17 N/ 1 K/S6,3 | 29.608.3153.0 | 267 |
| KL17 N/ 2 /S6,3 | 29.608.0253.0 | 267 |
| KL17 N/ 2 K/S6,3 | 29.608.3253.0 | 267 |
| KL17 N/ 3 /S6,3 | 29.608.0353.0 | 267 |
| KL17 N/ 3 K/S6,3 | 29.608.3353.0 | 267 |
| KL17 N/ 4 /S6,3 | 29.608.0453.0 | 267 |
| KL17 N/ 4 K/S6,3 | 29.608.3453.0 | 267 |
| KL17 N/ 5 S6,3 | 29.608.0553.0 | 267 |
| KL17 N/ 5 K/S6,3 | 29.608.3553.0 | 267 |
| KL17 N/ 6 /S6,3 | 29.608.0653.0 | 267 |
| KL17 N/ 6 K/S6,3 | 29.608.3653.0 | 267 |
| KL17 N/ 7 /S6,3 | 29.608.0753.0 | 267 |
| KL17 N/ 7 K/S6,3 | 29.608.3753.0 | 267 |
| KL17 N/ 8 /S6,3 | 29.608.0853.0 | 267 |
| KL17 N/ 8 K/S6,3 | 29.608.3853.0 | 267 |
| KL17 N/ 9 /S6,3 | 29.608.0953.0 | 267 |
| KL17 N/ 9 K/S6,3 | 29.608.3953.0 | 267 |
| KL17 N/10 /S6,3 | 29.608.1053.0 | 267 |
| KL17 N/10 K/S6,3 | 29.608.4053.0 | 267 |
| KL17 N/11 /S6,3 | 29.608.1153.0 | 267 |
| KL17 N/11 K/S6,3 | 29.608.4153.0 | 267 |
| KL17 N/12 /S6,3 | 29.608.1253.0 | 267 |
| KL17 N/12 K/S6,3 | 29.608.4253.0 | 267 |
| KL17 N/13 /S6,3 | 29.608.1353.0 | 267 |
| KL17 N/13 K/S6,3 | 29.608.4353.0 | 267 |
| KL17 N/14 /S6,3 | 29.608.1453.0 | 267 |
| KL17 N/14 K/S6,3 | 29.608.4453.0 | 267 |
| KL17 N/15 K/S6,3 | 29.608.4553.0 | 267 |
| KL17 N/16 /S6,3 | 29.608.1653.0 | 267 |
| KL17 N/16 K/S6,3 | 29.608.4653.0 | 267 |

# contents


| Type | Part no. | section / page |
|---|---|---|
| KL17 N/17 /S6,3 | 29.608.1753.0 | 267 |
| KL17 N/18 /S6,3 | 29.608.1853.0 | 267 |
| KL17 N/19 /S6,3 | 29.608.1953.0 | 267 |
| KL17 N/20 /S6,3 | 29.608.2053.0 | 267 |
| KL17 N/20 K/S6,3 | 29.608.5053.0 | 267 |
| KL17 N/21 /S6,3 | 29.608.2153.0 | 267 |
| KL17 N/22 /S6,3 | 29.608.2253.0 | 267 |
| KL17 N/23 /S6,3 | 29.608.2353.0 | 267 |
| KL17 N/24 /S6,3 | 29.608.2453.0 | 267 |
| KL17N/15 /S6,3 | 29.608.1553.0 | 267 |
| KLINGE | 05.502.0500.0 | 207 |
| KONT.AUFNAHME 1 | 05.502.3100.0 | 739 |
| KONT.AUFNAHME 1 | 05.502.3100.0 | 798 |
| KONT.AUFNAHME 2 | 05.502.3200.0 | 683 |
| KONT.AUFNAHME 2 | 05.502.3200.0 | 798 |
| KONT.AUFNAHME 3 | 05.502.3300.0 | 631 |
| KONT.AUFNAHME 3 | 05.502.3300.0 | 798 |
| KONTAKTFEDER | 05.549.1200.0 | 177 |
| KS0 11 / 1 Z KR | 19.230.0040.0 | 216 |
| KSQ 10 V | 57.803.8053.0 | 509 |
| KURZSCHLUSSTECKER | Z5.553.9400.0 | 176 |
| LEITERHALTER | 07.470.2256.0 | 258 |
| LEITERHALTER | 07.470.3256.0 | 258 |
| LEL 1,5/1 WEISS | 05.562.2453.0 | 309 |
| LEL 1,5/1 WEISS | 05.562.2453.0 | 33 |
| LEL 1,5/2 GRAU | 05.562.2553.0 | 33 |
| LEL 1,5/2 GRAU | 05.562.2553.0 | 309 |
| LEL 1,5/3 SCHWARZ | 05.562.2653.0 | 309 |
| LEL 1,5/3 SCHWARZ | 05.562.2653.0 | 33 |
| LEL 2,5/1 WEISS | 05.561.6553.0 | 19 |
| LEL 2,5/1 WEISS | 05.561.6553.0 | 308 |
| LEL 2,5/2 GRAU | 05.561.6653.0 | 308 |
| LEL 2,5/2 GRAU | 05.561.6653.0 | 20 |
| LEL 2,5/3 SCHWARZ | 05.561.6753.0 | 308 |
| LEL 2,5/3 SCHWARZ | 05.561.6753.0 | 19 |
| LEL 4/1 WEISS | 05.561.8553.0 | 20 |
| LEL 4/2 GRAU | 05.561.8653.0 | 20 |
| LEL 4/3 SCHWARZ | 05.561.8753.0 | 20 |
| LOCHSTREIFEN | 07.413.3653.0 | 331 |
| LP.STIFTLEISTE | Z5.530.0225.0 | 318 |
| LP.STIFTLEISTE | Z5.530.0325.0 | 318 |
| LP.STIFTLEISTE | Z5.530.0425.0 | 318 |
| LP.STIFTLEISTE | Z5.530.0525.0 | 318 |
| LP.STIFTLEISTE | Z5.530.0625.0 | 318 |
| LP.STIFTLEISTE | Z5.530.0725.0 | 318 |
| LP.STIFTLEISTE | Z5.530.0825.0 | 318 |
| LP.STIFTLEISTE | Z5.530.0925.0 | 318 |
| LP.STIFTLEISTE | Z5.530.1025.0 | 318 |
| LP.STIFTLEISTE | Z5.530.1125.0 | 318 |
| LP.STIFTLEISTE | Z5.530.1225.0 | 318 |
| LP.STIFTLEISTE | Z5.530.1325.0 | 318 |
| LP.STIFTLEISTE | Z5.530.1425.0 | 318 |
| LP.STIFTLEISTE | Z5.530.1525.0 | 318 |
| LP.STIFTLEISTE | Z5.530.1625.0 | 318 |
| LP.STIFTLEISTE | Z5.530.3225.0 | 318 |
| LP.STIFTLEISTE | Z5.530.3325.0 | 318 |
| LP.STIFTLEISTE | Z5.530.3425.0 | 318 |
| LP.STIFTLEISTE | Z5.530.3525.0 | 318 |
| LP.STIFTLEISTE | Z5.530.3625.0 | 318 |
| LP.STIFTLEISTE | Z5.530.3725.0 | 318 |
| LP.STIFTLEISTE | Z5.530.3825.0 | 318 |
| LP.STIFTLEISTE | Z5.530.3925.0 | 318 |
| LP.STIFTLEISTE | Z5.530.4025.0 | 318 |
| LP.STIFTLEISTE | Z5.530.4125.0 | 318 |
| LP.STIFTLEISTE | Z5.530.4225.0 | 318 |
| LP.STIFTLEISTE | Z5.530.4325.0 | 318 |
| LP.STIFTLEISTE | Z5.530.4425.0 | 318 |
| LP.STIFTLEISTE | Z5.530.4525.0 | 318 |
| LP.STIFTLEISTE | Z5.530.4625.0 | 318 |
| LP.STIFTLEISTE | Z5.530.6225.0 | 318 |
| LP.STIFTLEISTE | Z5.530.6325.0 | 318 |
| LP.STIFTLEISTE | Z5.530.6425.0 | 318 |
| LP.STIFTLEISTE | Z5.530.6525.0 | 318 |
| LP.STIFTLEISTE | Z5.530.6625.0 | 318 |
| LP.STIFTLEISTE | Z5.530.6725.0 | 318 |
| LP.STIFTLEISTE | Z5.530.6825.0 | 318 |
| LP.STIFTLEISTE | Z5.530.8225.0 | 318 |
| LP.STIFTLEISTE | Z5.530.8325.0 | 318 |
| LP.STIFTLEISTE | Z5.530.8425.0 | 318 |
| LP.STIFTLEISTE | Z5.530.8525.0 | 318 |
| LP.STIFTLEISTE | Z5.530.8625.0 | 318 |
| LP.STIFTLEISTE | Z5.530.8725.0 | 318 |
| LP.STIFTLEISTE | Z5.530.8825.0 | 318 |
| LP.STIFTLEISTE | Z5.531.0225.0 | 316 |
| LP.STIFTLEISTE | Z5.531.0325.0 | 316 |
| LP.STIFTLEISTE | Z5.531.0425.0 | 316 |
| LP.STIFTLEISTE | Z5.531.0525.0 | 316 |
| LP.STIFTLEISTE | Z5.531.0625.0 | 316 |
| LP.STIFTLEISTE | Z5.531.0725.0 | 316 |
| LP.STIFTLEISTE | Z5.531.0825.0 | 316 |
| LP.STIFTLEISTE | Z5.531.0925.0 | 316 |
| LP.STIFTLEISTE | Z5.531.1025.0 | 316 |
| LP.STIFTLEISTE | Z5.531.1125.0 | 316 |
| LP.STIFTLEISTE | Z5.531.1225.0 | 316 |
| LP.STIFTLEISTE | Z5.531.1325.0 | 316 |
| LP.STIFTLEISTE | Z5.531.1425.0 | 316 |
| LP.STIFTLEISTE | Z5.531.1525.0 | 316 |
| LP.STIFTLEISTE | Z5.531.1625.0 | 316 |
| LP.STIFTLEISTE | Z5.531.3225.0 | 316 |
| LP.STIFTLEISTE | Z5.531.3325.0 | 316 |
| LP.STIFTLEISTE | Z5.531.3425.0 | 316 |
| LP.STIFTLEISTE | Z5.531.3525.0 | 316 |
| LP.STIFTLEISTE | Z5.531.3625.0 | 316 |
| LP.STIFTLEISTE | Z5.531.3725.0 | 316 |
| LP.STIFTLEISTE | Z5.531.3825.0 | 316 |
| LP.STIFTLEISTE | Z5.531.3925.0 | 316 |
| LP.STIFTLEISTE | Z5.531.4025.0 | 316 |

| Type | Part no. | section / page |
|---|---|---|
| LP.STIFTLEISTE | Z5.531.4125.0 | 316 |
| LP.STIFTLEISTE | Z5.531.4225.0 | 316 |
| LP.STIFTLEISTE | Z5.531.4325.0 | 316 |
| LP.STIFTLEISTE | Z5.531.4425.0 | 316 |
| LP.STIFTLEISTE | Z5.531.4525.0 | 316 |
| LP.STIFTLEISTE | Z5.531.4625.0 | 316 |
| LP.STIFTLEISTE | Z5.532.0225.0 | 317 |
| LP.STIFTLEISTE | Z5.532.0325.0 | 317 |
| LP.STIFTLEISTE | Z5.532.0425.0 | 317 |
| LP.STIFTLEISTE | Z5.532.0525.0 | 317 |
| LP.STIFTLEISTE | Z5.532.0625.0 | 317 |
| LP.STIFTLEISTE | Z5.532.0725.0 | 317 |
| LP.STIFTLEISTE | Z5.532.0825.0 | 317 |
| LP.STIFTLEISTE | Z5.532.0925.0 | 317 |
| LP.STIFTLEISTE | Z5.532.1025.0 | 317 |
| LP.STIFTLEISTE | Z5.532.1125.0 | 317 |
| LP.STIFTLEISTE | Z5.532.1225.0 | 317 |
| LP.STIFTLEISTE | Z5.532.1325.0 | 317 |
| LP.STIFTLEISTE | Z5.532.1425.0 | 317 |
| LP.STIFTLEISTE | Z5.532.1525.0 | 317 |
| LP.STIFTLEISTE | Z5.532.1625.0 | 317 |
| LP.STIFTLEISTE | Z5.532.3225.0 | 317 |
| LP.STIFTLEISTE | Z5.532.3325.0 | 317 |
| LP.STIFTLEISTE | Z5.532.3425.0 | 317 |
| LP.STIFTLEISTE | Z5.532.3525.0 | 317 |
| LP.STIFTLEISTE | Z5.532.3625.0 | 317 |
| LP.STIFTLEISTE | Z5.532.3725.0 | 317 |
| LP.STIFTLEISTE | Z5.532.3825.0 | 317 |
| LP.STIFTLEISTE | Z5.532.3925.0 | 317 |
| LP.STIFTLEISTE | Z5.532.4025.0 | 317 |
| LP.STIFTLEISTE | Z5.532.4125.0 | 317 |
| LP.STIFTLEISTE | Z5.532.4225.0 | 317 |
| LP.STIFTLEISTE | Z5.532.4325.0 | 317 |
| LP.STIFTLEISTE | Z5.532.4425.0 | 317 |
| LP.STIFTLEISTE | Z5.532.4525.0 | 317 |
| LP.STIFTLEISTE | Z5.532.4625.0 | 317 |
| LP.STIFTLEISTE | Z5.540.0225.0 | 319 |
| LP.STIFTLEISTE | Z5.540.0325.0 | 319 |
| LP.STIFTLEISTE | Z5.540.0425.0 | 319 |
| LP.STIFTLEISTE | Z5.540.0525.0 | 319 |
| LP.STIFTLEISTE | Z5.540.0625.0 | 319 |
| LP.STIFTLEISTE | Z5.540.0825.0 | 319 |
| LP.STIFTLEISTE | Z5.540.0925.0 | 319 |
| LP.STIFTLEISTE | Z5.540.1025.0 | 319 |
| LP.STIFTLEISTE | Z5.540.1125.0 | 319 |
| LP.STIFTLEISTE | Z5.540.1225.0 | 319 |
| LP.STIFTLEISTE | Z5.540.1325.0 | 319 |
| LP.STIFTLEISTE | Z5.540.1425.0 | 319 |
| LP.STIFTLEISTE | Z5.540.1525.0 | 319 |
| LP.STIFTLEISTE | Z5.540.1625.0 | 319 |
| LP.STIFTLEISTE | Z5.540.3225.0 | 319 |
| LP.STIFTLEISTE | Z5.540.3325.0 | 319 |
| LP.STIFTLEISTE | Z5.540.3425.0 | 319 |
| LP.STIFTLEISTE | Z5.540.3525.0 | 319 |
| LP.STIFTLEISTE | Z5.540.3625.0 | 319 |
| LP.STIFTLEISTE | Z5.540.3725.0 | 319 |
| LP.STIFTLEISTE | Z5.540.3825.0 | 319 |
| LP.STIFTLEISTE | Z5.540.3925.0 | 319 |
| LP.STIFTLEISTE | Z5.540.4025.0 | 319 |
| LP.STIFTLEISTE | Z5.540.4125.0 | 319 |
| LP.STIFTLEISTE | Z5.540.4225.0 | 319 |
| LP.STIFTLEISTE | Z5.540.4325.0 | 319 |
| LP.STIFTLEISTE | Z5.540.4425.0 | 319 |
| LP.STIFTLEISTE | Z5.540.4525.0 | 319 |
| LP.STIFTLEISTE | Z5.540.4625.0 | 319 |
| LP.STIFTLEISTE | Z5.540.6225.0 | 319 |
| LP.STIFTLEISTE | Z5.540.6325.0 | 319 |
| LP.STIFTLEISTE | Z5.540.6425.0 | 319 |
| LP.STIFTLEISTE | Z5.540.6525.0 | 319 |
| LP.STIFTLEISTE | Z5.540.6625.0 | 319 |
| LP.STIFTLEISTE | Z5.540.6725.0 | 319 |
| LP.STIFTLEISTE | Z5.540.6825.0 | 319 |
| LP.STIFTLEISTE | Z5.540.8225.0 | 319 |
| LP.STIFTLEISTE | Z5.540.8325.0 | 319 |
| LP.STIFTLEISTE | Z5.540.8425.0 | 319 |
| LP.STIFTLEISTE | Z5.540.8525.0 | 319 |
| LP.STIFTLEISTE | Z5.540.8625.0 | 319 |
| LP.STIFTLEISTE | Z5.540.8725.0 | 319 |
| LP.STIFTLEISTE | Z5.540.8825.0 | 319 |
| LP.STIFTLEISTE | Z5.599.9025.0 | 320 |
| LP.STIFTLEISTE | Z5.540.0725.0 | 319 |
| LPB-14L-250V1A | 87.040.3053.0 | 540 |
| LPST 1 / 2 | 25.000.0256.0 | 330 |
| LPST 1 / 2 OB | 25.010.0256.0 | 330 |
| LPST 1 / 3 | 25.000.0356.0 | 330 |
| LPST 1 / 3 OB | 25.010.0356.0 | 330 |
| LPST 1 / 4 | 25.000.0456.0 | 330 |
| LPST 1 / 4 OB | 25.010.0456.0 | 330 |
| LPST 1 / 5 | 25.000.0556.0 | 330 |
| LPST 1 / 5 OB | 25.010.0556.0 | 330 |
| LPST 1 / 6 | 25.000.0656.0 | 330 |
| LPST 1 / 6 OB | 25.010.0656.0 | 330 |
| LPST 1 / 7 | 25.000.0756.0 | 330 |
| LPST 1 / 7 OB | 25.010.0756.0 | 330 |
| LPST 1 / 8 | 25.000.0856.0 | 330 |
| LPST 1 / 8 OB | 25.010.0856.0 | 330 |
| LPST 1 / 9 | 25.000.0956.0 | 330 |
| LPST 1 / 9 OB | 25.010.0956.0 | 330 |
| LPST 1 / 10 | 25.000.1056.0 | 330 |
| LPST 1 / 10 OB | 25.010.1056.0 | 330 |
| LPST 1 / 11 | 25.000.1156.0 | 330 |
| LPST 1 / 11 OB | 25.010.1156.0 | 330 |
| LPST 1 / 12 | 25.000.1256.0 | 330 |
| LPST 1 / 12 OB | 25.010.1256.0 | 330 |
| LPST 1 / 13 | 25.000.1356.0 | 330 |
| LPST 1 / 13 OB | 25.010.1356.0 | 330 |
| LPST 1 / 14 | 25.000.1456.0 | 330 |

| Type | Part no. | section / page |
|---|---|---|
| LPST 1 / 14 OB | 25.010.1456.0 | 330 |
| LPST 1 / 15 | 25.000.1556.0 | 330 |
| LPST 1 / 15 OB | 25.010.1556.0 | 330 |
| LPST 1 / 16 | 25.000.1656.0 | 330 |
| LPST 1 / 16 OB | 25.010.1656.0 | 330 |
| LPSTL 1 / 2 | 25.001.0256.0 | 330 |
| LPSTL 1 / 3 | 25.001.0356.0 | 330 |
| LPSTL 1 / 4 | 25.001.0456.0 | 330 |
| LPSTL 1 / 5 | 25.001.0556.0 | 330 |
| LPSTL 1 / 6 | 25.001.0656.0 | 330 |
| LPSTL 1 / 7 | 25.001.0756.0 | 330 |
| LPSTL 1 / 8 | 25.001.0856.0 | 330 |
| LPSTL 1 / 9 | 25.001.0956.0 | 330 |
| LPSTL 1 / 10 | 25.001.1056.0 | 330 |
| LPSTL 1 / 11 | 25.001.1156.0 | 330 |
| LPSTL 1 / 12 | 25.001.1256.0 | 330 |
| LPSTL 1 / 13 | 25.001.1356.0 | 330 |
| LPSTL 1 / 14 | 25.001.1456.0 | 330 |
| LPSTL 1 / 15 | 25.001.1556.0 | 330 |
| LPSTL 1 / 16 | 25.001.1656.0 | 330 |
| M - PB 8 SP | 87.220.0853.3 | 482 |
| M - PB 1 SR | 87.220.1353.3 | 482 |
| M - PB 4 SG | 87.220.1453.3 | 483 |
| M - PB 4 SP | 87.220.0753.3 | 482 |
| M - PB 8 SG | 87.220.1553.3 | 483 |
| M 16 x 1,5 | Z5.507.2121.0 | 776 |
| M 16 x 1,5 | Z5.507.9521.0 | 777 |
| M 16 x 1,5 - M 20 x 1,5 | 05.507.8621.0 | 778 |
| M 20 x 1,5 | 05.507.4021.0 | 779 |
| M 20 x 1,5 | 05.507.4053.0 | 779 |
| M 20 x 1,5 | Z5.507.2221.0 | 776 |
| M 20 x 1,5 | Z5.507.4821.0 | 777 |
| M 20 x 1,5 | Z5.507.5821.0 | 777 |
| M 20 x 1,5 | Z5.507.9621.0 | 777 |
| M 20 x 1,5 IP68 | Z5.507.1353.0 | 776 |
| M 20 x 1,5 - M 16 x 1,5 | 05.507.9021.0 | 778 |
| M 20 x 1,5 - M 25 x 1,5 | 05.507.8721.0 | 778 |
| M 20 x 1,5 - PG 13,5 | 05.507.8121.0 | 779 |
| M 20 x 1,5 - PG 16 | 05.507.8221.0 | 779 |
| M 25 x 1,5 | 05.507.4121.0 | 779 |
| M 25 x 1,5 | 05.507.4153.0 | 779 |
| M 25 x 1,5 | Z5.507.2321.0 | 776 |
| M 25 x 1,5 | Z5.507.6021.0 | 777 |
| M 25 x 1,5 | Z5.507.9721.0 | 777 |
| M 25 x 1,5 - M 20 x 1,5 | 05.507.9121.0 | 778 |
| M 25 x 1,5 - M 32 x 1,5 | 05.507.8821.0 | 778 |
| M 25 x 1,5 - PG 21 | 05.507.8321.0 | 779 |
| M 25x1,5 IP68 | Z5.507.1553.0 | 776 |
| M 32 x 1,5 | 05.507.4221.0 | 779 |
| M 32 x 1,5 | 05.507.4253.0 | 779 |
| M 32 x 1,5 | Z5.507.2421.0 | 776 |
| M 32 x 1,5 | Z5.507.5221.0 | 777 |
| M 32 x 1,5 | Z5.507.6221.0 | 777 |
| M 32 x 1,5 | Z5.507.9821.0 | 777 |
| M 32 x 1,5 IP68 | Z5.507.1753.0 | 776 |
| M 32 x 1,5 - M 25 x 1,5 | 05.507.9221.0 | 778 |
| M 32 x 1,5 - M 40 x 1,5 | 05.507.8921.0 | 778 |
| M 32 x 1,5 - PG 29 | 05.507.8421.0 | 779 |
| M 40 x 1,5 | 05.507.4321.0 | 779 |
| M 40 x 1,5 | 05.507.4353.0 | 779 |
| M 40 x 1,5 | Z5.507.6421.0 | 777 |
| M 40 x 1,5 IP68 | Z5.507.1921.0 | 776 |
| M 40 x 1,5 - M 32 x 1,5 | 05.507.9321.0 | 778 |
| M 40x1,5 IP68 | Z5.507.1953.0 | 776 |
| M-IAC 24 | Z5.580.7800.0 | 482 |
| M-IDC 24 | Z5.580.8100.0 | 482 |
| M25 x 1,5 | Z5.507.5021.0 | 777 |
| MAGAZ.M.25 BUCHS. | Z2.123.7400.0 | 800 |
| MAGAZIN M. 25 BU. | Z2.123.7000.0 | 800 |
| MAGAZIN M. 25 BU. | Z2.123.7100.0 | 800 |
| MAGAZIN M. 25 BU. | Z2.123.7200.0 | 800 |
| MAGAZIN M. 25 BU. | Z2.123.7300.0 | 800 |
| MAGAZIN M. 25 ST. | Z5.543.7000.0 | 800 |
| MAGAZIN M. 25 ST. | Z5.543.7100.0 | 800 |
| MAGAZIN M. 25 ST. | Z5.543.7200.0 | 800 |
| MAGAZIN M. 25 ST. | Z5.543.7300.0 | 800 |
| MAGAZIN M. 25 ST. | Z5.543.7400.0 | 800 |
| MMLEISTE6E / 5 | 21.310.0553.0 | 258 |
| MOD. 3POL. | 05.502.0910.0 | 741 |
| MOD. 4POL. | 05.502.0610.0 | 741 |
| MOD. 5POL. | 05.502.0810.0 | 741 |
| MOD.10POL. | 05.502.0710.0 | 741 |
| MOD.20POL. | 05.502.0410.0 | 741 |
| MODULLOESEWZ. | 05.502.1010.0 | 741 |
| N SH/35/F | Z1.980.0153.0 | 213 |
| OAC 3-32V/24-280V | Z8.000.0156.9 | 482 |
| OBERTEIL | 75.013.0051.0 | 758 |
| OBERTEIL | 75.013.0051.2 | 758 |
| ODC 3-32V/3-200V | Z8.000.0169.9 | 482 |
| ODC 3-32V/3-60V | Z8.000.0169.8 | 482 |
| PG 13,5 - M 20 x 1,5 | 05.507.7621.0 | 778 |
| PG 16 - M 20 x 1,5 | 05.507.7721.0 | 778 |
| PG 21 - M 25 x 1,5 | 05.507.7821.0 | 778 |
| PRESSWERKZEUG | 95.101.0900.0 | 798 |
| PRESSWERKZEUG | 95.101.1000.0 | 798 |
| PRESSWERKZEUG | 95.101.1100.0 | 799 |
| PRESSWERKZEUG | 95.101.1200.0 | 799 |
| PRUEFSTECKER | Z1.299.7153.0 | 189 |
| PRUEFSTECKER | Z1.299.8153.0 | 176 |
| PRUEFSTECKER | Z5.533.7121.0 | 357 |
| PRUEFSTECKER | Z5.533.7221.0 | 357 |
| PRUEFSTECKER | Z5.543.0153.0 | 358 |
| PRUEFSTECKER | Z5.543.0253.0 | 358 |
| PRUEFSTECKER VER. | Z1.299.6153.0 | 176 |
| PST1-WK4 | Z1.299.9253.0 | 177 |
| PST1-WK4 MN | Z1.299.9453.0 | 177 |
| PST10-WK4 | Z1.299.9553.0 | 177 |

# contents of
# type description

# contents TYPE


| Type | Part no. | section / page |
|---|---|---|
| QUERSCHALTLASCHE | Z7.269.2823.0 | 197 |
| QUERSCHALTLASCHE | Z7.269.2923.0 | 161 |
| QUERSCHALTLASCHE | Z7.269.3023.0 | 189 |
| QUERSCHALTLASCHE | Z7.269.3123.0 | 191 |
| QUERSCHALTLASCHE | Z7.269.3223.0 | 191 |
| QUERSCHALTLASCHE | Z7.269.3423.0 | 192 |
| QUERSCHALTLASCHE | Z7.269.3523.0 | 190 |
| QUERSCHALTLASCHE | Z7.269.3623.0 | 161 |
| QUERSCHALTLASCHE | Z7.269.4023.0 | 161 |
| QUERSCHALTLASCHE | Z7.269.4123.0 | 161 |
| QUERSCHALTLASCHE | Z7.269.4223.0 | 161 |
| R12- 12V-W-LED | 87.220.7553.0 | 454 |
| RAB - FS16 W A-S5 | 87.221.6653.0 | 566 |
| RAB - FS16 W B-S5 | 87.221.6753.0 | 566 |
| RAB - SS 4 | 87.220.1853.0 | 454 |
| RAB - SS 4/2 | 87.220.4753.3 | 455 |
| RAB - SS 8/2 | 87.220.4853.3 | 455 |
| RAB - SS 4 M | 87.221.5553.0 | 454 |
| RAB-FSS 16 | 87.220.2253.3 | 454 |
| RAB-FSS 8 | 87.220.1953.3 | 454 |
| RASTHEBEL | 05.594.3653.0 | 331 |
| REDUZIERPL. 24/10 | 07.416.6453.0 | 784 |
| REDUZIERPL. 24/16 | 07.416.6553.0 | 784 |
| REDUZIERPL. 24/6 | 07.416.6353.0 | 784 |
| REVOS MOD.RAHM.BU | 78.000.0653.0 | 742 |
| REVOS MOD.RAHM.BU | 78.000.1053.0 | 739 |
| REVOS MOD.RAHM.BU | 78.000.1653.0 | 742 |
| REVOS MOD.RAHM.BU | 78.000.2453.0 | 742 |
| REVOS MOD.RAHM.ST | 78.010.0653.0 | 742 |
| REVOS MOD.RAHM.ST | 78.010.1053.0 | 739 |
| REVOS MOD.RAHM.ST | 78.010.1653.0 | 742 |
| REVOS MOD.RAHM.ST | 78.010.2453.0 | 742 |
| REVOS MODULBU. 3P | 78.004.0353.0 | 739 |
| REVOS MODULBU. 4P | 78.003.0453.0 | 740 |
| REVOS MODULBU. 5P | 78.003.0553.0 | 740 |
| REVOS MODULBU.10P | 78.002.1053.0 | 740 |
| REVOS MODULBU.20P | 78.001.2053.0 | 740 |
| REVOS MODULST. 3P | 78.014.0353.0 | 739 |
| REVOS MODULST. 4P | 78.013.0453.0 | 740 |
| REVOS MODULST. 5P | 78.013.0553.0 | 740 |
| REVOS MODULST.10P | 78.012.1053.0 | 740 |
| REVOS MODULST.20P | 78.011.2053.0 | 740 |
| RFK 1 / 150 FK PA/V0 | 59.197.0255.0 | 157 |
| RFK 1 / 150 FMK PA/V0 | 59.197.1255.0 | 157 |
| RFK 1 / 150 FMK S35/V0 | 56.397.1255.0 | 157 |
| RFK 1 / 150 K PA/V0 | 59.197.0155.0 | 157 |
| RFK 1 / 185 F PA/V0 | 59.198.0055.0 | 158 |
| RFK 1 / 185 F S35/V0 | 56.398.0055.0 | 158 |
| RFK 1 / 185 FM PA/V0 | 59.198.1055.0 | 158 |
| RFK 1 / 185 FM S35/V0 | 56.398.1055.0 | 158 |
| RFK 1 / 240 F PA/V0 | 59.199.0055.0 | 159 |
| RFK 1 / 240 F S35/V0 | 56.399.0055.0 | 159 |
| RFK 1 / 240 FK PA/V0 | 59.199.0255.0 | 159 |
| RFK 1 / 240 FK S35/V0 | 56.399.0255.0 | 159 |
| RFK 1 / 240 FM PA/V0 | 59.199.1055.0 | 159 |
| RFK 1 / 240 FM S35/V0 | 56.399.1055.0 | 159 |
| RFK 1 / 240 FMK PA/V0 | 59.199.1255.0 | 159 |
| RFK 1 / 240 FMK S35/V0 | 56.399.1255.0 | 159 |
| RFK 1 / 240 K PA/V0 | 59.199.0155.0 | 159 |
| RFK 1 / 240 K S35/V0 | 56.399.0155.0 | 159 |
| RFK 1 / 95 F PA/V0 | 59.195.0055.0 | 156 |
| RFK 1 / 95 F S35/V0 | 56.395.0055.0 | 156 |
| RFK 1 / 95 FK PA/V0 | 59.195.0255.0 | 156 |
| RFK 1 / 95 FK S35/V0 | 56.395.0255.0 | 156 |
| RFK 1 / 95 FM PA/V0 | 59.195.1055.0 | 156 |
| RFK 1 / 95 FM S35/V0 | 56.395.1055.0 | 156 |
| RFK 1 / 95 FMK PA/V0 | 59.195.1255.0 | 156 |
| RFK 1 / 95 FMK S35/V0 | 56.395.1255.0 | 156 |
| RFK 1 / 95 K PA/V0 | 59.195.0155.0 | 156 |
| RFK 1 / 95 K S35/V0 | 56.395.0155.0 | 156 |
| RICOS PV-A | 83.039.0000.0 | 416 |
| RICOS 16 I | 83.035.3000.1 | 416 |
| RICOS 16 O | 83.035.3200.1 | 419 |
| RICOS 4AI / +-10V | 83.035.4000.1 | 424 |
| RICOS 4AI / 10V | 83.035.4001.1 | 424 |
| RICOS 4AI / 20MA | 83.035.4010.1 | 426 |
| RICOS 4AI / PT100 | 83.035.4040.1 | 423 |
| RICOS 4AI / TC | 83.035.4050.1 | 423 |
| RICOS 4AI4AO / +-10V | 83.035.4100.1 | 425 |
| RICOS 4AI4AO / 10V | 83.035.4101.1 | 425 |
| RICOS 4AI4AO / 20MA | 83.035.4110.1 | 427 |
| RICOS 4AI4AO / 4-20MA | 83.035.4111.1 | 427 |
| RICOS 4I AC 115V | 83.035.5000.1 | 417 |
| RICOS 4I AC 230V | 83.035.5005.1 | 417 |
| RICOS 4O RELAY | 83.035.5200.1 | 418 |
| RICOS 8 I/O | 83.035.3100.1 | 416 |
| RICOS 8I 8I/O | 83.035.3300.1 | 419 |
| RICOS BC-CAN-DN | 83.032.0000.1 | 411 |
| RICOS BC-CANOPEN | 83.033.0000.1 | 411 |
| RICOS BC-DP | 83.030.0000.1 | 410 |
| RICOS BC-S | 83.031.0000.1 | 410 |
| RICOS CAN-DN 16 I | 83.032.1000.1 | 429 |
| RICOS CAN-DN 16 O | 83.032.1200.1 | 429 |
| RICOS CAN-DN 8 I/0 | 83.032.1100.1 | 429 |
| RICOS CAN-DN 8I 8I/0 | 83.032.1300.1 | 429 |
| RICOS CANOPEN 16 I | 83.033.1000.1 | 429 |
| RICOS CANOPEN 16 O | 83.033.1200.1 | 429 |
| RICOS CANOPEN 8 I/0 | 83.033.1100.1 | 429 |
| RICOS CANOPEN 8I 8I/0 | 83.033.1300.1 | 429 |
| RICOS COUNTER | 83.035.5400.1 | 422 |
| RICOS DISK BASE | 05.591.3255.0 | 410 |
| RICOS DP 16 I | 83.030.1000.1 | 428 |
| RICOS DP 16 O | 83.030.1200.1 | 428 |
| RICOS DP 8 I/0 | 83.030.1100.1 | 428 |
| RICOS DP 8I 8I/0 | 83.030.1300.1 | 428 |
| RICOS EC-CAN-DN | 83.032.0001.1 | 415 |
| RICOS EC-CANOPEN | 83.033.0001.1 | 415 |
| RICOS EC-DP | 83.030.0001.1 | 414 |
| RICOS EC-S | 83.031.0001.1 | 414 |
| RICOS MANUAL D | 05.591.3389.0 | 410 |
| RICOS POSITION | 83.035.5410.1 | 422 |
| RICOS S 16 I | 83.031.1000.1 | 428 |
| RICOS S 16 O | 83.031.1200.1 | 428 |
| RICOS S 8 I/0 | 83.031.1100.1 | 428 |
| RICOS S 8I 8I/0 | 83.031.1300.1 | 428 |
| RICOS SOCKET FEMALE-S | 83.031.0010.0 | 410 |
| RICOS SOCKET FINAL-DP | 83.030.0011.0 | 410 |
| RICOS SOCKET KNOT-DP | 83.030.0010.0 | 410 |
| RICOS SOCKET MALE-S | 83.031.0011.0 | 410 |
| RSV 2 BLAU | 93.004.0056.6 | 207 |
| RSV 2 GRAU | 93.004.0056.0 | 207 |
| RV A/2 L BLAU | 26.500.4453.0 | 208 |
| RV2 A/2 TP1 BLAU | 26.500.4553.0 | 209 |
| RV2 A/3 L | 26.500.4153.0 | 208 |
| RV2 A/3 TP1 | 26.500.4253.0 | 209 |
| RV2 A/4 BLAU | 26.500.4353.0 | 208 |
| RV2 A/6 | 26.500.4053.0 | 208 |
| RV2 S/2 L BLAU | 26.500.2453.0 | 206 |
| RV2 S/2 TP1 BLAU | 26.500.2553.0 | 207 |
| RV2 S/3 L | 26.500.2153.0 | 206 |
| RV2 S/3 TP1 | 26.500.2253.0 | 207 |
| RV2 S/4 BLAU | 26.500.2353.0 | 206 |
| RV2 S/6 | 26.500.2053.0 | 206 |
| SBS-4SI-230V6,3A | 87.010.7453.0 | 540 |
| SBS-4SI-24V6,3A | 87.010.7653.0 | 540 |
| SCHIENENHALTER | Z5.519.0310.0 | 213 |
| SCHIENENHALTER | Z5.519.0410.0 | 213 |
| SCHIENENTRAEGER | Z1.980.0040.0 | 211 |
| SCHNELLMONT.GRIFF | 05.582.8153.0 | 175 |
| SCHNELLMONT.GRIFF | 05.593.4153.0 | 190 |
| SCHNELLMONT.GRIFF | 05.593.5853.0 | 190 |
| SCHNELLMONT.GRIFF | 05.593.5953.0 | 191 |
| SCHNELLMONT.GRIFF | 05.594.5853.0 | 175 |
| SCHNELLMONT.GRIFF | 05.594.5953.0 | 175 |
| SCHNELLMONT.GRIFF | 05.594.6053.0 | 175 |
| SCHRAUBBUCHSE | 05.508.8621.0 | 197 |
| SCHRAUBBUCHSE | 05.508.8721.0 | 197 |
| SCHRAUBBUCHSE | 05.508.9721.0 | 197 |
| SCHRAUBENSATZ | Z6.012.0812.0 | 305 |
| SCHUTZDECKEL | Z7.409.7056.0 | 780 |
| SCHUTZDECKEL | Z7.409.7156.0 | 780 |
| SCHUTZDECKEL | Z7.409.7256.0 | 780 |
| SCHUTZDECKEL | Z7.409.7356.0 | 780 |
| SCHUTZDECKEL | Z7.409.8856.0 | 780 |
| SCHUTZDECKEL | Z7.409.8956.0 | 780 |
| SELBSTKLEBESCHILD | 05.584.9489.0 | 183 |
| SIST- GL /V0 | Z1.299.4255.0 | 38 |
| SIST-... /V0 | Z1.299.4055.0 | 38 |
| SIST-LED /V0 | Z1.299.4155.0 | 38 |
| SPERRBOLZ.M.FEDRG | 05.513.4212.0 | 786 |
| SPERRBOLZ.M.FEDRG | 05.592.0621.0 | 786 |
| SPERRSTUECK | 05.593.7756.0 | 331 |
| SPERRSTUECK | Z5.592.1252.0 | 788 |
| SR - A 4 | Z1.000.9153.0 | 485 |
| SR - I 5 | Z1.000.4753.0 | 485 |
| SR 4-20 MA/UE 9,5-40VDC | 57.802.3053.0 | 452 |
| SSM-7E230V | 87.010.2053.0 | 541 |
| SSM-7E230V-250V5A | 87.030.1053.0 | 541 |
| SSW-V.24//RS422 | 57.007.0153.0 | 553 |
| SSW-V.24//RS485 | 57.007.0253.0 | 554 |
| SSW-V.24//TTY | 57.007.0053.0 | 553 |
| ST 2 / 2.3 ROT | Z5.553.2921.0 | 353 |
| ST 2 / 2.3 ROT | Z5.553.2921.0 | 19 |
| ST 2 / 4 SCHWARZ | Z5.553.3021.0 | 176 |
| ST 70,3 /24 REV | Z5.571.1356.0 | 675 |
| ST 70.1 / 6 REV WL | Z5.573.0156.0 | 675 |
| ST 70.1 / 6 REV WR | Z5.573.1156.0 | 675 |
| ST 70.1 / 6 REV U WL | Z5.573.4156.0 | 675 |
| ST 70.1 / 6 REV U WR | Z5.573.5156.0 | 675 |
| ST 70.1 / 6 RV WL | Z5.573.2156.0 | 675 |
| ST 70.1 / 6 RV WR | Z5.573.3156.0 | 675 |
| ST 70.1 / 6 RV U WL | Z5.573.6156.0 | 675 |
| ST 70.1 / 6 RV U WR | Z5.573.7156.0 | 675 |
| ST 70.1 /10 REV WL | Z5.573.0256.0 | 675 |
| ST 70.1 /10 REV WR | Z5.573.1256.0 | 675 |
| ST 70.1 /10 REV U WL | Z5.573.4256.0 | 675 |
| ST 70.1 /10 REV U WR | Z5.573.5256.0 | 675 |
| ST 70.1 /10 RV WL | Z5.573.2256.0 | 675 |
| ST 70.1 /10 RV WR | Z5.573.3256.0 | 675 |
| ST 70.1 /10 RV U WL | Z5.573.6256.0 | 675 |
| ST 70.1 /10 RV U WR | Z5.573.7256.0 | 675 |
| ST 70.1 /16 REV WL | Z5.573.0056.0 | 675 |
| ST 70.1 /16 REV WR | Z5.573.1056.0 | 675 |
| ST 70.1 /16 REV U WL | Z5.573.4056.0 | 675 |
| ST 70.1 /16 REV U WR | Z5.573.5056.0 | 675 |
| ST 70.1 /16 RV WL | Z5.573.2056.0 | 675 |
| ST 70.1 /16 RV WR | Z5.573.3056.0 | 675 |
| ST 70.1 /16 RV U WL | Z5.573.6056.0 | 675 |
| ST 70.1 /16 RV U WR | Z5.573.7056.0 | 675 |
| ST 70.1 /24 REV WL | Z5.573.0356.0 | 675 |
| ST 70.1 /24 REV WR | Z5.573.1356.0 | 675 |
| ST 70.1 /24 REV U WL | Z5.573.4356.0 | 675 |
| ST 70.1 /24 REV U WR | Z5.573.5356.0 | 675 |
| ST 70.1 /24 RV WL | Z5.573.2356.0 | 675 |
| ST 70.1 /24 RV WR | Z5.573.3356.0 | 675 |
| ST 70.1 /24 RV U WL | Z5.573.6356.0 | 675 |
| ST 70.1 /24 RV U WR | Z5.573.7356.0 | 675 |
| ST 70.3 / 6 REV | Z5.571.1156.0 | 675 |
| ST 70.3 / 6 REVZ | Z5.571.0156.0 | 675 |
| ST 70.3 / 6 RV | Z5.571.3156.0 | 675 |
| ST 70.3 / 6 RVZ | Z5.571.2156.0 | 675 |
| ST 70.3 /10 REV | Z5.571.1256.0 | 675 |
| ST 70.3 /10 REVZ | Z5.571.0256.0 | 675 |
| ST 70.3 /10 RV | Z5.571.3256.0 | 675 |
| ST 70.3 /10 RVZ | Z5.571.2256.0 | 675 |
| ST 70.3 /16 REV | Z5.571.1056.0 | 675 |
| ST 70.3 /16 REVZ | Z5.571.0056.0 | 675 |
| ST 70.3 /16 RV | Z5.571.3056.0 | 675 |
| ST 70.3 /16 RVZ | Z5.571.2056.0 | 675 |
| ST 70.3 /24 REVZ | Z5.571.0356.0 | 675 |
| ST 70.3 /24 RV | Z5.571.3356.0 | 675 |
| ST 70.3 /24 RVZ | Z5.571.2356.0 | 675 |
| ST 70.7 / 6 REV | Z5.571.5156.0 | 677 |
| ST 70.7 / 6 REVZ | Z5.571.4156.0 | 677 |
| ST 70.7 / 6 RV | Z5.571.8656.0 | 677 |
| ST 70.7 / 6 RVZ | Z5.571.6656.0 | 677 |
| ST 70.7 /10 REV | Z5.571.5256.0 | 677 |
| ST 70.7 /10 REVZ | Z5.571.4256.0 | 677 |
| ST 70.7 /10 RV | Z5.571.8756.0 | 677 |
| ST 70.7 /10 RVZ | Z5.571.6756.0 | 677 |
| ST 70.7 /16 REV | Z5.571.5056.0 | 677 |
| ST 70.7 /16 REVZ | Z5.571.4056.0 | 677 |
| ST 70.7 /16 RV | Z5.571.8556.0 | 677 |
| ST 70.7 /16 RVZ | Z5.571.6556.0 | 677 |
| ST 70.7 /24 REV | Z5.571.5356.0 | 677 |
| ST 70.7 /24 REVZ | Z5.571.4356.0 | 677 |
| ST 70.7 /24 RV | Z5.571.8856.0 | 677 |
| ST 70.7 /24 RVZ | Z5.571.6856.0 | 677 |
| ST 72,3 /10 REV | Z5.571.1756.0 | 679 |
| ST 72.1 / 6 REV WL | Z5.573.0656.0 | 679 |
| ST 72.1 / 6 REV WR | Z5.573.1656.0 | 679 |
| ST 72.1 / 6 REV U WL | Z5.573.4656.0 | 679 |
| ST 72.1 / 6 REV U WR | Z5.573.5656.0 | 679 |
| ST 72.1 / 6 RV WL | Z5.573.2656.0 | 679 |
| ST 72.1 / 6 RV WR | Z5.573.3656.0 | 679 |
| ST 72.1 / 6 RV U WL | Z5.573.6656.0 | 679 |
| ST 72.1 / 6 RV U WR | Z5.573.7656.0 | 679 |
| ST 72.1 /10 REV WL | Z5.573.0756.0 | 679 |
| ST 72.1 /10 REV WR | Z5.573.1756.0 | 679 |
| ST 72.1 /10 REV U WL | Z5.573.4756.0 | 679 |
| ST 72.1 /10 REV U WR | Z5.573.5756.0 | 679 |
| ST 72.1 /10 RV WL | Z5.573.2756.0 | 679 |
| ST 72.1 /10 RV WR | Z5.573.3756.0 | 679 |
| ST 72.1 /10 RV U WL | Z5.573.6756.0 | 679 |
| ST 72.1 /10 RV U WR | Z5.573.7756.0 | 679 |
| ST 72.1 /16 REV WL | Z5.573.0556.0 | 679 |
| ST 72.1 /16 REV WR | Z5.573.1556.0 | 679 |
| ST 72.1 /16 REV U WL | Z5.573.4556.0 | 679 |
| ST 72.1 /16 REV U WR | Z5.573.5556.0 | 679 |
| ST 72.1 /16 RV WL | Z5.573.2556.0 | 679 |
| ST 72.1 /16 RV WR | Z5.573.3556.0 | 679 |
| ST 72.1 /16 RV U WL | Z5.573.6556.0 | 679 |
| ST 72.1 /16 RV U WR | Z5.573.7556.0 | 679 |
| ST 72.1 /24 REV WL | Z5.573.0856.0 | 679 |
| ST 72.1 /24 REV WR | Z5.573.1856.0 | 679 |
| ST 72.1 /24 REV U WL | Z5.573.4856.0 | 679 |
| ST 72.1 /24 REV U WR | Z5.573.5856.0 | 679 |
| ST 72.1 /24 RV WL | Z5.573.2856.0 | 679 |
| ST 72.1 /24 RV WR | Z5.573.3856.0 | 679 |
| ST 72.1 /24 RV U WL | Z5.573.6856.0 | 679 |
| ST 72.1 /24 RV U WR | Z5.573.7856.0 | 679 |
| ST 72.3 / 6 REV | Z5.571.1656.0 | 679 |
| ST 72.3 / 6 REVZ | Z5.571.0656.0 | 679 |
| ST 72.3 / 6 RV | Z5.571.3656.0 | 679 |
| ST 72.3 / 6 RVZ | Z5.571.2656.0 | 679 |
| ST 72.3 /10 REVZ | Z5.571.0756.0 | 679 |
| ST 72.3 /10 RV | Z5.571.3756.0 | 679 |
| ST 72.3 /10 RVZ | Z5.571.2756.0 | 679 |
| ST 72.3 /16 REV | Z5.571.1556.0 | 679 |
| ST 72.3 /16 REVZ | Z5.571.0556.0 | 679 |
| ST 72.3 /16 RV | Z5.571.3556.0 | 679 |
| ST 72.3 /16 RVZ | Z5.571.2556.0 | 679 |
| ST 72.3 /24 REV | Z5.571.1856.0 | 679 |
| ST 72.3 /24 REVZ | Z5.571.0856.0 | 679 |
| ST 72.3 /24 RV | Z5.571.3856.0 | 679 |
| ST 72.3 /24 RVZ | Z5.571.2856.0 | 679 |
| ST 72.7 / 6 REV | Z5.571.5656.0 | 681 |
| ST 72.7 / 6 REVZ | Z5.571.4656.0 | 681 |
| ST 72.7 / 6 RV | Z5.571.9656.0 | 681 |
| ST 72.7 / 6 RVZ | Z5.571.7656.0 | 681 |
| ST 72.7 /10 REV | Z5.571.5756.0 | 681 |
| ST 72.7 /10 REVZ | Z5.571.4756.0 | 681 |
| ST 72.7 /10 RV | Z5.571.9756.0 | 681 |
| ST 72.7 /10 RVZ | Z5.571.7756.0 | 681 |
| ST 72.7 /16 REV | Z5.571.5556.0 | 681 |
| ST 72.7 /16 REVZ | Z5.571.4556.0 | 681 |
| ST 72.7 /16 RV | Z5.571.9556.0 | 681 |
| ST 72.7 /16 RVZ | Z5.571.7556.0 | 681 |
| ST 72.7 /24 REV | Z5.571.5856.0 | 681 |
| ST 72.7 /24 REVZ | Z5.571.4856.0 | 681 |
| ST 72.7 /24 RV | Z5.571.9856.0 | 681 |
| ST 72.7 /24 RVZ | Z5.571.7856.0 | 681 |
| ST 73.1 /40 REV WL | Z5.573.8056.0 | 683 |
| ST 73.1 /40 REV WR | Z5.573.8356.0 | 683 |
| ST 73.1 /40 REV U WL | Z5.573.9156.0 | 683 |
| ST 73.1 /40 REV U WR | Z5.573.9356.0 | 683 |
| ST 73.1 /40 RV WL | Z5.573.8656.0 | 683 |
| ST 73.1 /40 RV WR | Z5.573.8956.0 | 683 |
| ST 73.1 /40 RV U WL | Z5.573.9556.0 | 683 |
| ST 73.1 /40 RV U WR | Z5.573.9756.0 | 683 |
| ST 73.1 /64 REV WL | Z5.573.8156.0 | 683 |
| ST 73.1 /64 REV WR | Z5.573.8456.0 | 683 |
| ST 73.1 /64 REV U WL | Z5.573.9256.0 | 683 |
| ST 73.1 /64 REV U WR | Z5.573.9456.0 | 683 |
| ST 73.1 /64 RV WL | Z5.573.8756.0 | 683 |
| ST 73.1 /64 RV WR | Z5.573.9056.0 | 683 |
| ST 73.1 /64 RV U WL | Z5.573.9656.0 | 683 |
| ST 73.1 /64 RV U WR | Z5.573.9856.0 | 683 |
| ST 73.7 /40 REV | Z5.571.7056.0 | 683 |
| ST 73.7 /40 REVZ | Z5.571.6056.0 | 683 |
| ST 73.7 /40 RV | Z5.571.9056.0 | 683 |

# contents


| Type | Part no. | section / page |
|---|---|---|
| ST 73.7 /40 RVZ | Z5.571.8056.0 | 683 |
| ST 73.7 /64 REV | Z5.571.7156.0 | 683 |
| ST 73.7 /64 REVZ | Z5.571.6156.0 | 683 |
| ST 73.7 /64 RV | Z5.571.9156.0 | 683 |
| ST 73.7 /64 RVZ | Z5.571.8156.0 | 683 |
| ST.EIG.ANL. | 72.310.0653.9 | 767 |
| ST.EIG.ANL. | 72.310.1053.9 | 767 |
| ST.EIG.ANL. | 72.310.1653.9 | 767 |
| ST.EIG.ANL. | 72.310.2453.9 | 767 |
| ST.EIG.ANL. | 72.310.4853.9 | 767 |
| ST.EINSATZ 3/3/6 | 72.213.1253.0 | 705 |
| ST.EINSATZ 4/6 | 72.215.1053.0 | 699 |
| ST.EINSATZ 6/6 | 72.215.1253.0 | 703 |
| ST.EINSATZ 660V | 70.410.0340.0 | 643 |
| ST.EINSATZ 660V | 70.410.0640.0 | 643 |
| ST.EINSATZ 660V | 70.410.1040.0 | 643 |
| ST.EINSATZ 660V | 70.410.1640.0 | 643 |
| ST.EINSATZ 660V | 70.410.2040.0 | 643 |
| ST.EINSATZ 660V | 70.410.2640.0 | 643 |
| ST.EINSATZ 660V | 70.410.3240.0 | 643 |
| ST.EINSATZ VERGOL | 70.311.0640.0 | 631 |
| ST.EINSATZ VERGOL | 70.311.1040.0 | 631 |
| ST.EINSATZ VERGOL | 70.311.1640.0 | 631 |
| ST.EINSATZ VERGOL | 70.311.2440.0 | 631 |
| ST25/5 B/V0 | 93.031.2055.0 | 218 |
| ST25/5 S/V0 | 93.032.2055.0 | 218 |
| ST25/5 SV/V0 | 93.032.2455.0 | 218 |
| ST28/10 B/V0 | 93.001.1055.0 | 219 |
| ST28/10 BS/V0 | 93.003.1055.0 | 219 |
| ST28/10 S/V0 | 93.002.1055.0 | 219 |
| ST29/10 BC | 93.101.2053.0 | 320 |
| ST29/10 S/V0 | 93.102.0055.0 | 205 |
| STECKER D-SUB 9 | 87.200.2205.3 | 560 |
| STECKER D-SUB 15 | 87.200.2206.3 | 560 |
| STECKER D-SUB 25 | 87.200.2207.3 | 560 |
| STECKER D-SUB 37 | 87.200.2208.3 | 560 |
| STECKER D-SUB 50 | 87.200.2209.3 | 560 |
| STECKERBUCHSE | 05.508.6521.0 | 191 |
| STECKERBUCHSE | 05.509.6021.0 | 176 |
| STECKEREINSATZ | 70.210.0653.0 | 689 |
| STECKEREINSATZ | 70.310.0640.0 | 631 |
| STECKEREINSATZ | 70.310.1040.0 | 631 |
| STECKEREINSATZ | 70.310.1640.0 | 631 |
| STECKEREINSATZ | 70.310.2440.0 | 631 |
| STECKEREINSATZ | 70.310.3253.0 | 631 |
| STECKEREINSATZ | 70.310.4840.0 | 631 |
| STECKEREINSATZ | 70.510.0653.0 | 631 |
| STECKEREINSATZ | 70.510.1053.0 | 631 |
| STECKEREINSATZ | 70.510.1653.0 | 631 |
| STECKEREINSATZ | 70.510.2453.0 | 631 |
| STECKEREINSATZ | 70.510.3253.0 | 631 |
| STECKEREINSATZ | 70.510.4853.0 | 631 |
| STECKEREINSATZ | 70.710.0658.0 | 631 |
| STECKEREINSATZ | 70.710.1058.0 | 631 |
| STECKEREINSATZ | 70.710.1658.0 | 631 |
| STECKEREINSATZ | 70.710.2458.0 | 631 |
| STECKEREINSATZ | 70.710.3253.0 | 631 |
| STECKEREINSATZ | 70.710.4858.0 | 631 |
| STECKEREINSATZ | 72.210.0653.0 | 693 |
| STECKEREINSATZ | 72.215.0653.0 | 707 |
| STECKEREINSATZ | 72.310.0653.0 | 655 |
| STECKEREINSATZ | 72.310.1053.0 | 655 |
| STECKEREINSATZ | 72.310.1653.0 | 655 |
| STECKEREINSATZ | 72.310.2453.0 | 655 |
| STECKEREINSATZ | 72.310.3253.0 | 655 |
| STECKEREINSATZ | 72.310.4853.0 | 655 |
| STECKEREINSATZ | 72.710.0658.0 | 655 |
| STECKEREINSATZ | 72.710.1058.0 | 655 |
| STECKEREINSATZ | 72.710.1658.0 | 655 |
| STECKEREINSATZ | 72.710.2458.0 | 655 |
| STECKEREINSATZ | 72.710.3258.0 | 655 |
| STECKEREINSATZ | 72.710.4858.0 | 655 |
| STECKEREINSATZ | 73.310.0353.0 | 713 |
| STECKEREINSATZ | 73.310.0453.0 | 713 |
| STECKEREINSATZ | 73.710.0753.0 | 713 |
| STECKEREINSATZ | 73.710.0853.0 | 713 |
| STECKEREINSATZ | 73.710.1553.0 | 719 |
| STECKEREINSATZ | 73.710.2553.0 | 719 |
| STECKEREINSATZ | 73.710.4058.0 | 719 |
| STECKEREINSATZ | 73.710.6458.0 | 719 |
| STECKERKONTAKT | 05.544.3129.8 | 739 |
| STECKERKONTAKT | 05.544.3229.8 | 740 |
| STECKERKONTAKT | 05.544.3329.8 | 740 |
| STECKERKONTAKT | 05.544.3429.8 | 740 |
| STECKERKONTAKT | 05.544.3529.8 | 740 |
| STECKERKONTAKT | 05.544.3629.8 | 740 |
| STECKERKONTAKT | 05.544.3729.8 | 740 |
| STECKERKONTAKT | 05.544.3829.8 | 740 |
| STECKERKONTAKT | 05.544.3929.8 | 740 |
| STECKERKONTAKT | 05.544.4029.8 | 740 |
| STECKERKONTAKT | 05.544.4129.8 | 740 |
| STECKERKONTAKT | 05.544.4229.8 | 740 |
| STECKERKONTAKT | 05.544.4329.8 | 740 |
| STECKERKONTAKT | 05.544.4429.8 | 740 |
| STECKERKONTAKT | 05.544.4529.8 | 740 |
| STECKERKONTAKT | 05.544.4629.7 | 740 |
| STECKERKONTAKT | 05.544.4729.7 | 740 |
| STECKERKONTAKT | 05.544.5621.0 | 761 |
| STECKERLEISTE | Z5.533.8221.0 | 357 |
| STECKERTEIL | 75.012.5053.0 | 758 |
| STECKERTEIL | 99.701.6905.5 | 760 |
| STVB. KOMPLETT | 99.700.0000.6 | 672 |
| STVB. KOMPLETT | 99.701.0000.6 | 672 |
| STVB. KOMPLETT | 99.702.0000.6 | 672 |
| STVB. KOMPLETT | 99.703.0000.6 | 672 |
| STVB. KOMPLETT | 99.706.0000.6 | 672 |
| STVB. KOMPLETT | 99.707.0000.6 | 672 |

| Type | Part no. | section / page |
|---|---|---|
| STVB. KOMPLETT | 99.708.0000.6 | 672 |
| STVB. KOMPLETT | 99.709.0000.6 | 672 |
| STVB. KOMPLETT | 99.718.0000.6 | 672 |
| STVB. KOMPLETT | 99.719.0000.6 | 672 |
| STVB. KOMPLETT | 99.720.0000.6 | 672 |
| STVB. KOMPLETT | 99.721.0000.6 | 672 |
| STVB. KOMPLETT | 99.725.0000.6 | 672 |
| STVB. KOMPLETT | 99.726.0000.6 | 672 |
| STVB. KOMPLETT | 99.727.0000.6 | 672 |
| TE / RFK 1 / 95 PA/V0 | 07.340.0353.0 | 156 |
| TE/RFK 1/150-240 PA/V0 | 07.340.1053.0 | 157 |
| TMS-101-250V5A | 87.110.6253.0 | 539 |
| TR.-STUECK F.TS35 | Z5.595.2153.0 | 584 |
| TR.STUECK M. U-F | 05.583.0053.0 | 584 |
| TR.STUECK M. U-F | 05.583.0053.0 | 675 |
| TR.STUECK M. U-F | 05.583.0153.0 | 586 |
| TR.STUECK M. U-F | 05.584.8853.0 | 590 |
| TR.STUECK M. U-F | 05.584.8953.0 | 590 |
| TRAGBOCK | Z1.990.2030.0 | 215 |
| TRAGSCHIENE 2M | 98.310.0000.0 | 215 |
| TRENNSTUECK | 05.592.1953.0 | 215 |
| TRENNWAND M.BEZ. | 07.340.1153.0 | 152 |
| TRENNWAND M.BEZ. | 07.340.1353.0 | 152 |
| TS 2,5 GELB | 07.311.2053.8 | 312 |
| TS 2,5 GELB | 07.311.2053.8 | 101 |
| TS 4 GELB | 07.311.2153.8 | 78 |
| TS 4 / 15 GELB | 07.311.2953.8 | 112 |
| TS 6 GELB | 07.311.2253.8 | 103 |
| TS 10 GELB | 07.311.2353.8 | 78 |
| TS 16 GELB | 07.311.2453.8 | 69 |
| TS M3 S35 | 69.335.0253.0 | 219 |
| TS M4 / M6-32 | 69.332.0000.0 | 219 |
| TS M4 S35 | 69.335.0453.0 | 219 |
| TS M5 S35 | 69.335.0553.0 | 219 |
| TS M6 S35 | 69.335.0653.0 | 219 |
| TSI 35 GELB | 07.311.8653.8 | 79 |
| TSM 2,5 / 15 GELB | 07.311.2853.8 | 144 |
| TSN AD 16 GELB | 07.311.8553.8 | 104 |
| TSN16 GELB | 07.311.8453.8 | 104 |
| TUSCHESTIFT 0.25 | 95.502.0125.0 | 49 |
| TUSCHESTIFT 0.35 | 95.502.0135.0 | 49 |
| TW 2,5 - 4 /15 BLAU | 07.311.1853.6 | 145 |
| TW 2,5 - 4 /V0 | 07.311.1155.0 | 78 |
| TW 2,5 - 4 BL/V0 | 07.311.1155.6 | 78 |
| TW 4 TK... /V0 | 07.311.8155.0 | 122 |
| TW 6 BL/V0 | 07.311.1255.6 | 103 |
| TW 1 - 2,5 | 07.312.5153.0 | 232 |
| TW 1 - 2,5 | 07.312.5153.6 | 232 |
| TW 2,5-3 D/U /V0 | 07.312.1255.0 | 118 |
| TW 2,5-4 K/U /V0 | 07.312.0555.0 | 118 |
| TW 2,5-4 KO/V0 | 07.310.9455.0 | 120 |
| TW 4 E /V0 | 07.311.5055.0 | 114 |
| TW 6 /V0 | 07.311.1255.0 | 103 |
| TWC 1 - 2,5 D1. | 07.312.5353.0 | 234 |
| TWC 1 - 2,5 D1. BLAU | 07.312.5353.6 | 234 |
| TWC 1 - 2,5 D2./ E | 07.312.5553.0 | 231 |
| TWC 1 - 2,5 D2./ E BLAU | 07.312.5553.6 | 236 |
| TWF 1,5 E | 07.312.3653.0 | 33 |
| TWF 2,5 - 4 | 07.312.2253.0 | 19 |
| TWF 2,5 - 4 BLAU | 07.312.2253.6 | 20 |
| TWF 2,5/D 1/2 | 07.312.2453.0 | 26 |
| TWF 2,5/D 1/2 BLAU | 07.312.2453.6 | 26 |
| TWF 2,5/D 2/2 | 07.312.2653.0 | 26 |
| TWF 2,5/D 2/2 BLAU | 07.312.2653.6 | 26 |
| TWF 4 E | 07.312.5853.0 | 30 |
| TWF 4/D1/2 | 07.312.4953.0 | 27 |
| TWF 4/D1/2 BLAU | 07.312.4953.6 | 27 |
| TWI 4/V0 | 07.311.6955.0 | 72 |
| TWM 2,5 - 4 /15 | 07.311.1853.0 | 145 |
| TWN 10 /V0 | 07.311.7655.0 | 103 |
| TWN 10 BL/V0 | 07.311.7655.6 | 103 |
| TWN 16 /V0 | 07.311.7755.0 | 104 |
| TWN 16 BL/V0 | 07.311.7755.6 | 104 |
| TWN 35 /V0 | 07.311.7855.0 | 105 |
| TWN 35 BL /V0 | 07.311.7855.6 | 105 |
| TWN 70 /V0 | 07.311.7955.0 | 105 |
| TWN 70 BL /V0 | 07.311.7955.6 | 105 |
| TWN2,5E | 07.312.1855.0 | 116 |
| UEBERGABE UNIVERSAL-S5 | 87.221.6353.0 | 563 |
| UEBERGABE UNIVERSAL-S5 | 87.222.6353.0 | 565 |
| UET +- 10 V | 57.802.1053.0 | 506 |
| UET-P +- 10 V | 57.802.1153.0 | 507 |
| UET-P +- 20 MA | 57.802.1353.0 | 507 |
| UET-P +- 199MV | 57.802.1453.0 | 507 |
| UET-P/LCD +-10 V | 57.802.2153.0 | 507 |
| UET-P/LCD +-20MA | 57.802.2353.0 | 507 |
| UET/LCD +- 10 V | 57.802.2053.0 | 506 |
| UET/LCD +- 20 MA | 57.802.2253.0 | 506 |
| UNTERLEGPLATTE | 07.470.1380.0 | 258 |
| UNTERLEGPLATTE | 07.471.1380.0 | 259 |
| UNTERLEGPLATTE | 07.472.1380.0 | 259 |
| UNTERLEGPLATTE | 07.473.1380.0 | 259 |
| UNTERTEIL | 75.013.5051.0 | 758 |
| VB 16 E / M | 07.256.8027.0 | 259 |
| VB 16 E / 2 POLIG | 07.256.8227.0 | 259 |
| VB 0,5 WK 4..- 2 | 07.255.0227.0 | 168 |
| VB 0,5 WK 4..- 3 | 07.255.0327.0 | 168 |
| VB 0,5 WK 4..- 4 | 07.255.0427.0 | 168 |
| VB 0,5 WK 4..- 5 | 07.255.0527.0 | 168 |
| VB 0,5 WK 4..- 6 | 07.255.0627.0 | 168 |
| VB 0,5 WK 4..- 7 | 07.255.0727.0 | 168 |
| VB 0,5 WK 4..- 8 | 07.255.0827.0 | 168 |
| VB 0,5 WK 4..- 9 | 07.255.0927.0 | 168 |
| VB 0,5 WK 4..- M-70 | 07.255.0027.0 | 168 |
| VB 0,5 WK 4..-10 | 07.255.1027.0 | 168 |
| VB 0,5 WK 4..-11 | 07.255.1127.0 | 168 |
| VB 0,5 WK 4..-12 | 07.255.1227.0 | 168 |

| Type | Part no. | section / page |
|---|---|---|
| VB 1 WK 4..- 2 | 07.255.4227.0 | 168 |
| VB 1 WK 4..- 3 | 07.255.4327.0 | 168 |
| VB 1 WK 4..- 4 | 07.255.4427.0 | 168 |
| VB 1 WK 4..- 5 | 07.255.4527.0 | 168 |
| VB 1 WK 4..- 6 | 07.255.4627.0 | 168 |
| VB 1 WK 4..- 7 | 07.255.4727.0 | 168 |
| VB 1 WK 4..- 8 | 07.255.4827.0 | 168 |
| VB 1 WK 4..- 9 | 07.255.4927.0 | 168 |
| VB 1 WK 4..- M-70 | 07.255.4027.0 | 168 |
| VB 1 WK 4..-10 | 07.255.5027.0 | 168 |
| VB 1 WK 4..-11 | 07.255.5127.0 | 168 |
| VB 1 WK 4..-12 | 07.255.5227.0 | 168 |
| VB 11 / 1 / 12 | 07.250.1027.0 | 258 |
| VB 11/ 1 / 2 | 07.250.0227.0 | 258 |
| VB 11/ 1 / 6 | 07.250.0627.0 | 258 |
| VB 11/ 2 | 07.250.2527.0 | 218 |
| VB 9786 2 | 07.253.0227.0 | 130 |
| VB 9786 3 | 07.253.0327.0 | 130 |
| VB 9786 6 | 07.253.0627.0 | 130 |
| VB 9786 4 | 07.253.0427.0 | 168 |
| VB 9786 M | 07.253.0027.0 | 259 |
| VB RFK 1 / 95 / 2 / 32 | 07.205.1227.0 | 153 |
| VB RFK 1 / 95 / 3 / 32 | 07.205.1327.0 | 153 |
| VB RFK 1 / 95 / 4 / 32 | 07.205.1427.0 | 153 |
| VB RFK 1 185 2 | 07.201.4227.0 | 157 |
| VB RFK 1 185 3 | 07.201.4327.0 | 157 |
| VB RFK 1 185 4 | 07.201.4427.0 | 157 |
| VB RFK 1 240 2 | 07.201.8227.0 | 159 |
| VB RFK 1 240 3 | 07.201.8327.0 | 159 |
| VB RFK 1 240 4 | 07.201.8427.0 | 159 |
| VB WK 4 - 2 | Z7.281.0227.0 | 87 |
| VB WK 4 - 3 | Z7.281.0327.0 | 87 |
| VB WK 4 - 4 | Z7.281.0427.0 | 87 |
| VB WK 4 - 5 | Z7.281.0527.0 | 87 |
| VB WK 4 - 6 | Z7.281.0627.0 | 87 |
| VB WK 4 M-70 | Z7.281.0027.0 | 87 |
| VB WK 4/D..-2 | Z7.281.6227.0 | 164 |
| VB WK 4/D..-3 | Z7.281.6327.0 | 164 |
| VB WK 4/D..-4 | Z7.281.6427.0 | 164 |
| VB WK 4/D..-5 | Z7.281.6527.0 | 164 |
| VB WK 4/D..-6 | Z7.281.6627.0 | 164 |
| VB WK 4/D..M-70 | Z7.281.6027.0 | 164 |
| VB WK 10 / SI - 2 | Z7.287.0227.0 | 125 |
| VB WK 10 / SI - 3 | Z7.287.0327.0 | 125 |
| VB WK 10 / SI - 4 | Z7.287.0427.0 | 165 |
| VB WK 10 / SI - 5 | Z7.287.0527.0 | 165 |
| VB WK 10 / SI - 6 | Z7.287.0627.0 | 125 |
| VB WK 10 / SI M-30 | Z7.287.0027.0 | 165 |
| VB WK 2,5 - 2 | Z7.280.0227.0 | 120 |
| VB WK 2,5 - 3 | Z7.280.0327.0 | 120 |
| VB WK 2,5 - 4 | Z7.280.0427.0 | 164 |
| VB WK 2,5 - 5 | Z7.280.0527.0 | 164 |
| VB WK 2,5 - 6 | Z7.280.0627.0 | 120 |
| VB WK 2,5 M-80 | Z7.280.0027.0 | 164 |
| VB WK 4E - 11 | 07.255.3127.0 | 168 |
| VB WK 6 - 2 | Z7.282.0227.0 | 165 |
| VB WK 6 - 3 | Z7.282.0327.0 | 165 |
| VB WK 6 - 4 | Z7.282.0427.0 | 165 |
| VB WK 6 - 5 | Z7.282.0527.0 | 165 |
| VB WK 6 - 6 | Z7.282.0627.0 | 165 |
| VB WK 6 M-40 | Z7.282.0027.0 | 165 |
| VB WK/..S/IW/U- 2 | Z7.281.3227.0 | 140 |
| VB WK/..S/IW/U- 3 | Z7.281.3327.0 | 140 |
| VB WK/..S/IW/U- 4 | Z7.281.3427.0 | 164 |
| VB WK/..S/IW/U- 5 | Z7.281.3527.0 | 164 |
| VB WK/..S/IW/U- 6 | Z7.281.3627.0 | 140 |
| VB WK/..S/IW/U-20 | Z7.281.3027.0 | 164 |
| VB WK2,5 KO - 2 | 07.257.0227.0 | 120 |
| VB WK2,5 KO - 3 | 07.257.0327.0 | 120 |
| VB WK2,5 KO - 20 | 07.257.2027.0 | 120 |
| VB WK4 E - 7 | 07.255.2727.0 | 168 |
| VB WK4 E - 8 | 07.255.2827.0 | 168 |
| VB WK4 E - 9 | 07.255.2927.0 | 168 |
| VB WK4 E - 10 | 07.255.3027.0 | 168 |
| VB WK4 E - 12 | 07.255.3227.0 | 168 |
| VB WK4 E - 2 | 07.255.2227.0 | 168 |
| VB WK4 E - 3 | 07.255.2327.0 | 168 |
| VB WK4 E - 4 | 07.255.2427.0 | 168 |
| VB WK4 E - 5 | 07.255.2527.0 | 168 |
| VB WK4 E - 6 | 07.255.2627.0 | 168 |
| VB WK4 E M | 07.255.2027.0 | 168 |
| VB WKI 10 - 2 | Z7.288.0227.0 | 87 |
| VB WKI 10 - 3 | Z7.288.0327.0 | 87 |
| VB WKI 10 - 4 | Z7.288.0427.0 | 87 |
| VB WKI 10 - 5 | Z7.288.0527.0 | 87 |
| VB WKI 10 - 6 | Z7.288.0627.0 | 87 |
| VB WKI 10 M-40 | Z7.288.0027.0 | 87 |
| VB WKI 16 - 2 | Z7.289.0227.0 | 87 |
| VB WKI 16 - 3 | Z7.289.0327.0 | 69 |
| VB WKI 16 - 4 | Z7.289.0427.0 | 87 |
| VB WKI 16 - 5 | Z7.289.0527.0 | 87 |
| VB WKI 16 - 6 | Z7.289.0627.0 | 87 |
| VB WKI 16 M-20 | Z7.289.0027.0 | 87 |
| VB WKM 2,5 / 15 - 2 | Z7.215.4227.0 | 164 |
| VB WKM 2,5 / 15 - 3 | Z7.215.4327.0 | 164 |
| VB WKM 2,5 / 15 - 4 | Z7.215.4427.0 | 164 |
| VB WKM 2,5 / 15 - 5 | Z7.215.4527.0 | 164 |
| VB WKM 2,5 / 15 - 6 | Z7.215.4627.0 | 164 |
| VB WKM 2,5 / 15 M-60 | Z7.215.4027.0 | 164 |
| VB WKN70 - 2 | Z7.286.3227.0 | 165 |
| VB WKN70 - 3 | Z7.286.3327.0 | 165 |
| VB WKN70 - 4 | Z7.286.3427.0 | 165 |
| VB WKN70 - 5 | Z7.286.3527.0 | 165 |
| VB WKN70 - 6 | Z7.286.3627.0 | 165 |
| VBK6.2 BLAU | Z8.000.0202.4 | 442 |
| VBK6.2 ROT | Z8.000.0202.3 | 442 |
| VBRM3.3 | Z8.000.0200.8 | 442 |

# contents of
# type description

# contents TYPE


| Type | Part no. | section / page |
|---|---|---|
| VBS WK4 E - 2 | 07.256.4227.0 | 168 |
| VBS WK4 E - 3 | 07.256.4327.0 | 168 |
| VBS WK4 E - 4 | 07.256.4427.0 | 168 |
| VBS WK4 E - 5 | 07.256.4527.0 | 168 |
| VBS WK4 E - 6 | 07.256.4627.0 | 168 |
| VBS WK4 E - 7 | 07.256.4727.0 | 168 |
| VBS WK4 E - 8 | 07.256.4827.0 | 168 |
| VBS WK4 E - 9 | 07.256.4927.0 | 168 |
| VBS WK4 E - 10 | 07.256.5027.0 | 168 |
| VBS WK4 E - 11 | 07.256.5127.0 | 168 |
| VBS WK4 E - 12 | 07.256.5227.0 | 168 |
| VBWKN 10 - 2 | Z7.283.6227.0 | 165 |
| VBWKN 10 - 3 | Z7.283.6327.0 | 165 |
| VBWKN 10 - 4 | Z7.283.6427.0 | 165 |
| VBWKN 10 - 5 | Z7.283.6527.0 | 165 |
| VBWKN 10 - 6 | Z7.283.6627.0 | 165 |
| VBWKN 10 - M-40 | Z7.283.6027.0 | 165 |
| VBWKN150 - 2 | Z7.287.1227.0 | 165 |
| VBWKN150 - 3 | Z7.287.1327.0 | 165 |
| VERB.-SCHIENE | 05.561.4125.0 | 310 |
| VERB.-SCHIENE | 05.561.4125.0 | 134 |
| VERBINDUNGSKAMM | 07.250.3027.0 | 128 |
| VERBINDUNGSKAMM # | 07.250.1627.0 | 256 |
| VERBINDUNGSKAMM # | 07.250.3127.0 | 128 |
| VM WKF K0..18 | 69.700.1853.0 | 45 |
| VM WKF K0..9 | 69.700.0953.0 | 45 |
| W.NR.07060796 6E SONDER | 99.272.3521.9 | 258 |
| WAK16/1 | 30.494.1010.0 | 216 |
| WAK16/1 BL | 30.494.1010.6 | 216 |
| WAK16/1 GN | 30.494.1010.7 | 216 |
| WAK16/2 BL/V0 | 30.494.3021.6 | 24 |
| WAK25/3 | 30.494.1110.0 | 216 |
| WAK25/3 BL | 30.494.1110.6 | 193 |
| WAK25/3 GN | 30.494.1110.7 | 216 |
| WAK35/2 BL/V0 | 30.494.4021.6 | 107 |
| WAK35/2 BLANK | 30.494.4121.0 | 24 |
| WAK35/3 | 30.494.2510.0 | 216 |
| WAK35/3 BL | 30.494.2510.6 | 193 |
| WAK35/3 GN | 30.494.2510.7 | 216 |
| WAK4/1 | 30.494.0010.0 | 216 |
| WAK4/1 BL | 30.494.0010.6 | 216 |
| WAK4/1 GN | 30.494.0010.7 | 216 |
| WAK4/3 | 30.494.0110.0 | 216 |
| WAK4/3 BL | 30.494.0110.6 | 216 |
| WAK4/3 GN | 30.494.0110.7 | 216 |
| WE 1/U | Z5.523.5753.0 | 101 |
| WE 1/U | Z5.523.5753.0 | 584 |
| WE 2/U | Z5.523.5653.0 | 105 |
| WE SH 1/35 | Z5.515.3310.0 | 212 |
| WE SH 2/35 | Z5.515.3410.0 | 212 |
| WEB1001 LEERG B3 | 87.030.0053.0 | 585 |
| WEB1001 LEERG.B1 | 86.010.0053.0 | 584 |
| WEB1001 LEERG.B1 | 87.010.0053.0 | 584 |
| WEB1001 LEERG.B2 | 86.020.0053.0 | 584 |
| WEB1001 LEERG.B2 | 87.020.0053.0 | 584 |
| WEB1001 LEERG.B3 | 86.030.0053.0 | 585 |
| WEB1001 LEERG.B4 | 86.040.0053.0 | 585 |
| WEB1001 LEERG.B4 | 87.040.0053.0 | 585 |
| WEB1001 LEERG.B6 | 87.060.0053.0 | 586 |
| WEB1001 LEERG.B7 | 87.070.0053.0 | 586 |
| WEB1001 LEERG.B8 | 87.080.0053.0 | 587 |
| WEB1001 LEERG.B9 | 87.090.0053.0 | 587 |
| WEF 1 BS/35 | 69.920.1053.0 | 47 |
| WEF 1/35 | Z5.523.9353.0 | 20 |
| WEF 1/35 | Z5.523.9353.0 | 308 |
| WEG LEERG. F. 4A | 57.801.0053.0 | 592 |
| WEG LEERG. F. 4A | 57.801.5053.0 | 592 |
| WEG LEERG. F. 6A | 57.801.5153.0 | 593 |
| WEG LEERG. F. 8A | 57.801.5253.0 | 593 |
| WIEBOX CN 19 DK | 07.416.5353.0 | 594 |
| WIEBOX CN 19 DU | 07.416.5453.0 | 594 |
| WIEBOX CN 19 EP | 07.416.4553.0 | 594 |
| WIEBOX CN 19 FK | 07.416.4853.0 | 594 |
| WIEBOX CN 19 FKG | 07.416.4856.0 | 594 |
| WIEBOX CN 19 GK | Z1.296.3553.0 | 594 |
| WIEBOX CN 19 GKL | Z1.296.3453.0 | 594 |
| WIEBOX CN 22 DK | 07.416.5653.0 | 594 |
| WIEBOX CN 22 DU | 07.416.5753.0 | 594 |
| WIEBOX CN 22 EP | 07.416.4653.0 | 594 |
| WIEBOX CN 22 FK | 07.416.4953.0 | 594 |
| WIEBOX CN 22 FKG | 07.416.4956.0 | 594 |
| WIEBOX CN 22 GK | Z1.296.3953.0 | 594 |
| WIEBOX CN 22 GKL | Z1.296.3853.0 | 594 |
| WIEBOX CN 26 DK | 07.416.5853.0 | 595 |
| WIEBOX CN 26 DU | 07.416.5953.0 | 595 |
| WIEBOX CN 26 EP | 07.416.4753.0 | 595 |
| WIEBOX CN 26 FK | 07.416.5053.0 | 595 |
| WIEBOX CN 26 FKG | 07.416.5056.0 | 595 |
| WIEBOX CN 26 GK | Z1.296.4353.0 | 595 |
| WIEBOX CN 26 GKL | Z1.296.4253.0 | 595 |
| WIEBOX CN BL1 | 05.561.9553.0 | 594 |
| WIEBOX CN BL2 | 05.561.9653.0 | 594 |
| WIEBOX CN BZ | 04.244.1853.0 | 502 |
| WIEBOX CN DK | 07.416.5153.0 | 594 |
| WIEBOX CN DU | 07.416.5253.0 | 594 |
| WINKEL LINKS | 05.523.1710.0 | 204 |
| WINKEL RECHTS | 05.523.1610.0 | 204 |
| WIPOS 24VDC/10A 1PH H | 81.000.6041.0 | 520 |
| WIPOS 24VDC/10A 1PH V | 81.000.6040.0 | 519 |
| WIPOS 24VDC/2,0A 1PH V | 81.000.6010.0 | 518 |
| WIPOS 24VDC/20A 1PH H | 81.000.6051.0 | 521 |
| WIPOS 24VDC/20A 1PH V | 81.000.6050.0 | 519 |
| WIPOS 24VDC/20A 3PH H | 81.000.6053.0 | 522 |
| WIPOS 24VDC/40A 3PH H | 81.000.6063.0 | 522 |
| WIPOS 24VDC/5,0A 1PH H | 81.000.6031.0 | 520 |
| WIPOS 24VDC/5,0A 1PH V | 81.000.6030.0 | 518 |
| WK / 3-6S / IW / U/V0 | 57.504.6755.0 | 140 |
| WK / 3-6S / U/V0 | 57.504.6655.0 | 140 |
| WK / 4-8S / IW / U/V0 | 57.504.6355.0 | 141 |
| WK / 4-8S / U/V0 | 57.504.6255.0 | 141 |
| WK / 5-10S / U/V0 | 57.504.3655.0 | 139 |
| WK 2,5 / U /V0 | 57.503.0055.0 | 101 |
| WK 2,5 / U BL / V0 | 57.503.0055.6 | 102 |
| WK 4 / 3-6S KO/U/V0 | 57.504.7355.0 | 141 |
| WK 4 / D 1/2 U/V0 BLAU | 57.504.5055.6 | 112 |
| WK 4 / THSI5 U/V0 | 57.904.5355.0 | 124 |
| WK 4 / U /V0 | 57.504.0055.0 | 69 |
| WK 4 / U BL / V0 | 57.504.0055.6 | 69 |
| WK 4 / U F1/V0 | 57.504.1055.0 | 142 |
| WK 4 / U F2/V0 | 57.504.1155.0 | 142 |
| WK 4 3-6 S 1K / U / V0 | 57.504.3755.0 | 138 |
| WK 4 3-6 S 1K/IW/U/V0 | 57.504.2755.0 | 139 |
| WK 4 5S2,8 1K / U/V0 | 57.504.3855.0 | 138 |
| WK 4 5S2,8 1K/IW/U/V0 | 57.504.2855.0 | 139 |
| WK 4 E / U G-ULR/V0 | 57.404.8055.9 | 115 |
| WK 4 E / U G-URL/V0 | 57.404.8355.5 | 115 |
| WK 4 E / U G2/1/V0 | 57.404.8855.9 | 115 |
| WK 4 E / U G2/V0 | 57.404.7955.5 | 115 |
| WK 4 E / U G0/V0 | 57.404.8255.5 | 115 |
| WK 4 E / U GU/V0 | 57.404.8155.9 | 115 |
| WK 4 E / U LD 42V/V0 | 57.404.8455.5 | 115 |
| WK 4 SL / U /V0 | 57.504.9055.0 | 69 |
| WK 4 TKG-TRST / U/V0 | 57.504.4555.0 | 123 |
| WK 4 TKG-TRST P3/ U/V0 | 57.504.4855.0 | 123 |
| WK 4 TKS D / U V0 | 57.504.4455.0 | 123 |
| WK 6 / U /V0 | 57.506.0055.0 | 101 |
| WK 6 / U BL / V0 | 57.506.0055.6 | 101 |
| WK 6 SL / U /V0 | 57.506.9055.0 | 101 |
| WK 10/SI U 5 X 20 /V0 | 57.910.5055.0 | 101 |
| WK 10/SI U 5 X 25 /V0 | 57.910.5155.0 | 125 |
| WK 10/SI U 5 X 30 /V0 | 57.910.5255.0 | 125 |
| WK 10/SI U 5X20M.GLB/V0 | 57.910.5855.0 | 125 |
| WK 10/SI U 5X20M.NGL/V0 | 57.910.5455.0 | 125 |
| WK 10/SI U 6,3 X 32 /V0 | 57.910.5355.0 | 125 |
| WK 10/SI U D/V0 | 57.910.4955.0 | 125 |
| WK 10/SIU6,3X32M.GLB/V0 | 57.910.6155.0 | 125 |
| WK 10/SIU6,3X32M.NGL/V0 | 57.910.5755.0 | 125 |
| WK 2,5 U /8113 S-VS | 05.576.5853.0 | 311 |
| WK 2,5 U /8113 S-VS | 05.576.5853.0 | 137 |
| WK 2,5-3 D SL /V0 | 56.503.8355.0 | 119 |
| WK 2,5-3 D SL-NGN /V0 | 56.503.8455.0 | 119 |
| WK 2,5-3 D SL-PGN /V0 | 56.503.8555.0 | 119 |
| WK 2,5-3 D/U /V0 | 57.503.8855.0 | 118 |
| WK 2,5-3 D/U-NGN /V0 | 57.503.8955.0 | 118 |
| WK 2,5-3 D/U-PGN /V0 | 57.503.9055.0 | 118 |
| WK 2,5-4 KI SL /V0 | 56.503.7355.0 | 119 |
| WK 2,5-4 KI SL-NGN /V0 | 56.503.7455.0 | 119 |
| WK 2,5-4 KI SL-PGN /V0 | 56.503.7555.0 | 119 |
| WK 2,5-4 KI SL-PRT /V0 | 56.503.7655.0 | 119 |
| WK 2,5-4 KI/U /V0 | 57.503.7855.0 | 118 |
| WK 2,5-4 KI/U-NGN /V0 | 57.503.7955.0 | 118 |
| WK 2,5-4 KOI /U /V0 | 57.503.7055.0 | 120 |
| WK 2,5-4 KOI /U-NGN /V0 | 57.503.7155.0 | 120 |
| WK 2,5-4 KOI /U-PGN /V0 | 57.503.7255.0 | 121 |
| WK 2,5U/8113S/H/V0 | 57.503.2055.0 | 137 |
| WK 2,5U/8113S/H/V0 | 57.503.2055.0 | 311 |
| WK 4 E/U LD +P O 24/V0 | 57.404.7255.5 | 115 |
| WK 4 E/U LD -P O 24/V0 | 57.404.7455.9 | 115 |
| WK 4 E/U LDG +P O 24/V0 | 57.404.8755.5 | 115 |
| WK 4 E/U LED+PO 24LD/V0 | 57.404.6255.9 | 115 |
| WK 4 SI-D/U 5 X20/V0 | 57.504.1755.0 | 126 |
| WK 4 SI-D/U 5 X25/V0 | 57.504.1655.0 | 126 |
| WK 4 TKG/U /V0 | 57.504.4055.0 | 101 |
| WK 4 TKM P3/U /V0 | 57.504.2355.0 | 123 |
| WK 4 TKM/U /V0 | 57.504.2055.0 | 101 |
| WK 4 TKM/U BL /V0 | 57.504.2055.6 | 123 |
| WK 4/D E U/V0 | 57.504.5255.0 | 113 |
| WK 4/D1/2U/V0 | 57.504.5055.0 | 112 |
| WK 4/D2/2SLU /V0 | 57.504.9155.0 | 113 |
| WK 4/D2/2U BL/V0 | 57.504.5155.6 | 112 |
| WK 4/D2/2U/V0 | 57.504.5155.0 | 112 |
| WK 4/THSI 5 GL 250U /V0 | 57.904.5755.0 | 124 |
| WK 4/THSI 5 GL 500U /V0 | 57.904.5855.0 | 124 |
| WK 4/THSI 5 LED 12U /V0 | 57.904.5455.0 | 124 |
| WK 4/THSI 5 LED 24U /V0 | 57.904.5555.0 | 124 |
| WK 4/THSI 5 LED 60U /V0 | 57.904.5655.0 | 124 |
| WK 4/THSI6,3 GL 250U/V0 | 57.904.6755.0 | 124 |
| WK 4/THSI6,3 GL 500U/V0 | 57.904.6855.0 | 124 |
| WK 4/THSI6,3 LED 12U/V0 | 57.904.6455.0 | 124 |
| WK 4/THSI6,3 LED 24U/V0 | 57.904.6555.0 | 124 |
| WK 4/THSI6,3 LED 60U/V0 | 57.904.6655.0 | 124 |
| WK 4/THSI6,3 U /V0 | 57.904.6355.0 | 124 |
| WK 4E SL/U /V0 | 57.504.9255.0 | 115 |
| WK 4E/U /V0 | 57.404.7055.0 | 114 |
| WK 4E/UVB SW/V0 | 57.404.6955.1 | 114 |
| WK2,5-4 KI/U-PGN /V0 | 57.503.8055.0 | 118 |
| WK2,5U / 8113S/V... /V0 | 57.503.2655.0 | 136 |
| WK2,5U/8113S/V/LED25/V0 | 57.503.2755.0 | 310 |
| WK2,5U/8113S/V/LED25/V0 | 57.503.2755.0 | 136 |
| WK2,5U/8113S/V/LED50/V0 | 57.503.2855.0 | 137 |
| WK2,5U/8113S/V/LED50/V0 | 57.503.2855.0 | 311 |
| WK2,5U/8113S/V/VK/V0 | 57.503.3055.6 | 137 |
| WK2,5U/8113S/V/VK/V0 | 57.503.3055.6 | 311 |
| WK2,5U/D/8113S/V.../V0 | 57.503.2155.0 | 134 |
| WK2,5U/D/8113S/V.../V0 | 57.503.2155.0 | 312 |
| WK2,5U/D/8113S/V/LD25V0 | 57.503.2255.0 | 312 |
| WK2,5U/D/8113S/V/LD25V0 | 57.503.2255.0 | 134 |
| WK2,5U/D/8113S/V/LD50V0 | 57.503.2355.0 | 135 |
| WK2,5U/D/8113S/V/LD50V0 | 57.503.2355.0 | 313 |
| WK2,5U/D/8113S/V/VK/V0 | 57.503.2555.6 | 313 |
| WK2,5U/D/8113S/V/VK/V0 | 57.503.2555.6 | 135 |
| WKB 2,5 / B / U/V0 | 57.603.3555.0 | 205 |
| WKB 2,5 / U/V0 | 57.603.0055.0 | 204 |
| WKC 1 /35 | 56.301.0053.0 | 231 |
| WKC 1 /35 BLAU | 56.301.0053.6 | 231 |
| WKC 1 /D2/2/SL/35 | 56.301.9153.0 | 237 |
| WKC 1 D1/2/35 | 56.301.5053.0 | 231 |
| WKC 1 D1/2/35 BLAU | 56.301.5053.6 | 234 |
| WKC 1 D1/2/SL/35 | 56.301.9353.0 | 235 |
| WKC 1 D2/2/35 | 56.301.5153.0 | 231 |
| WKC 1 D2/2/35 BLAU | 56.301.5153.6 | 236 |
| WKC 1 E/35 | 56.301.7053.0 | 231 |
| WKC 1 SL/35 | 56.301.9053.0 | 231 |
| WKC 1 TKG/35 | 56.301.4053.0 | 231 |
| WKC 1 TKM/35 | 56.301.2053.0 | 231 |
| WKC 1 TKM/35 BLAU | 56.301.2053.6 | 240 |
| WKC 2,5 /35 | 56.303.0053.0 | 231 |
| WKC 2,5 /35 BLAU | 56.303.0053.6 | 231 |
| WKC 2,5 D1/2/35 | 56.303.5053.0 | 231 |
| WKC 2,5 D1/2/35 BLAU | 56.303.5053.6 | 234 |
| WKC 2,5 D1/2/SL/35 | 56.303.9353.0 | 235 |
| WKC 2,5 D2/2/35 | 56.303.5153.0 | 231 |
| WKC 2,5 D2/2/35 BLAU | 56.303.5153.6 | 236 |
| WKC 2,5 D2/2/SL/35 | 56.303.9153.0 | 231 |
| WKC 2,5 E/35 | 56.303.7053.0 | 231 |
| WKC 2,5 E/35 G-URL | 56.303.8353.5 | 239 |
| WKC 2,5 E/35 G2 | 56.303.7953.5 | 239 |
| WKC 2,5 E/35 GO | 56.303.8253.5 | 239 |
| WKC 2,5 E/35 ORANGE | 56.303.7553.9 | 239 |
| WKC 2,5 E/35 ROT | 56.303.7553.5 | 239 |
| WKC 2,5 E/35/1D/2G ROT | 56.303.7153.5 | 239 |
| WKC 2,5 SL/35 | 56.303.9053.0 | 231 |
| WKC 2,5 TKG/35 | 56.303.4053.0 | 231 |
| WKC 2,5 TKM/35 | 56.303.2053.0 | 231 |
| WKC 2,5 TKM/35 BLAU | 56.303.2053.6 | 240 |
| WKC2,5E/35/1D/2G ORANGE | 56.303.7153.9 | 239 |
| WKF 1,5 E / 35 | 56.702.7053.0 | 33 |
| WKF 1,5E/8113/35 | 07.312.4753.0 | 37 |
| WKF 1,5E/8113/35 | 07.312.4753.0 | 309 |
| WKF 1,5E/8113/35 | 56.702.2053.0 | 37 |
| WKF 1,5E/8113/35 | 56.702.2053.0 | 309 |
| WKF 1.5 KOA 2L/SL | 37.702.7653.0 | 45 |
| WKF 1.5 KOA 2L/SL-PGE | 37.702.8653.0 | 45 |
| WKF 1.5 KOE | 37.702.7753.0 | 45 |
| WKF 1.5 KOE-PGN | 37.702.8753.0 | 45 |
| WKF 1.5 KOI 3L | 37.702.7453.0 | 44 |
| WKF 1.5 KOI 3L-PGE | 37.702.8453.0 | 44 |
| WKF 1.5 KOI 3L/SL | 37.702.7553.0 | 44 |
| WKF 1.5 KOI 3L/SL-PGE | 37.702.8553.0 | 44 |
| WKF 10/35 | 56.710.0053.0 | 21 |
| WKF 10/35 BLAU | 56.710.0053.6 | 21 |
| WKF 10SL/35 | 56.710.9053.0 | 23 |
| WKF 16/35 | 56.716.0053.0 | 21 |
| WKF 16/35 BLAU | 56.716.0053.6 | 21 |
| WKF 16SL/35 | 56.716.9053.0 | 23 |
| WKF 2,5 / 35 | 56.703.0053.0 | 19 |
| WKF 2,5 / 35 BLAU | 56.703.0053.6 | 19 |
| WKF 2,5 / D / D / 35 | 56.703.5253.0 | 27 |
| WKF 2,5 / D 1/2 /SL/35 | 56.703.9353.0 | 28 |
| WKF 2,5 / D 2/2 / SL/35 | 56.703.9153.0 | 19 |
| WKF 2,5 / D2/SL35/8113 | 56.703.9253.0 | 36 |
| WKF 2,5 / D2/SL35/8113 | 56.703.9253.0 | 308 |
| WKF 2,5 SL / 35 | 56.703.9053.0 | 19 |
| WKF 2,5/D1/2/35 | 56.703.5053.0 | 19 |
| WKF 2,5/D1/2/35 BLAU | 56.703.5053.6 | 19 |
| WKF 2,5/D2 35/8113 | 56.703.2053.0 | 308 |
| WKF 2,5/D2 35/8113 | 56.703.2053.0 | 36 |
| WKF 2,5/D2/ 35/8113 BL | 56.703.2053.6 | 308 |
| WKF 2,5/D2/ 35/8113 BL | 56.703.2053.6 | 36 |
| WKF 2,5/D2/2/35 | 56.703.5153.0 | 19 |
| WKF 2,5/D2/2/35 BLAU | 56.703.5153.6 | 19 |
| WKF 4 E/35 | 56.704.7053.0 | 30 |
| WKF 4 / 35 | 56.704.0053.0 | 19 |
| WKF 4 / 35 BLAU | 56.704.0053.6 | 19 |
| WKF 4 E/SL/35 | 56.704.9253.0 | 31 |
| WKF 4 NT / 35 | 56.704.8153.0 | 24 |
| WKF 4 SL / 35/V0 | 56.704.9053.0 | 19 |
| WKF 4 TKG / 35 | 56.704.4053.0 | 38 |
| WKF 4 TKM / 35 | 56.704.2053.0 | 39 |
| WKF 4/D1/2/35 | 56.704.5053.0 | 27 |
| WKF 4/D1/2/35 BLAU | 56.704.5053.6 | 27 |
| WKF 4/D1/2/SL/35 | 56.704.9353.0 | 29 |
| WKF 6/35 | 56.706.0053.0 | 21 |
| WKF 6/35 BLAU | 56.706.0053.6 | 21 |
| WKF 6SL/35 | 56.706.9053.0 | 23 |
| WKI 10 / U BLAU/V0 | 57.510.1155.6 | 78 |
| WKI 10 / U/V0 | 57.510.1155.0 | 78 |
| WKI 10 ETK/U/V0 | 57.510.8255.0 | 80 |
| WKI 10 PEN/35/V0 | 56.510.9455.0 | 84 |
| WKI 10 SL / 35/V0 | 56.510.9255.0 | 82 |
| WKI 16 / U BLAU/V0 | 57.516.1155.6 | 69 |
| WKI 16 / U/V0 | 57.516.1155.0 | 69 |
| WKI 16 ETK/U/V0 | 57.516.8255.0 | 69 |
| WKI 16 PEN/35/V0 | 56.516.9455.0 | 84 |
| WKI 16 SL / 35/V0 | 56.516.9255.0 | 69 |
| WKI 35 / U BLAU/V0 | 57.535.1155.6 | 79 |
| WKI 35 / U/V0 | 57.535.1155.0 | 79 |
| WKI 35 PEN/35/V0 | 56.535.9455.0 | 85 |
| WKI 35 SL / 35/V0 | 56.535.9255.0 | 83 |
| WKI 4 D-D /V0 | 56.404.9755.0 | 69 |
| WKI 4 D-D-SL /V0 | 56.404.9855.0 | 69 |
| WKI 4 DU /V0 | 56.404.9655.0 | 72 |
| WKI 4 N-D-SL /V0 | 56.404.9455.0 | 69 |
| WKI 4 NT -D-SL GL/V0 | 56.404.9255.0 | 73 |
| WKI 4 NT -D-SL /V0 | 56.404.9555.0 | 69 |
| WKI 4 NTN-D-SL /V0 | 56.404.9155.0 | 74 |
| WKI 4 TKG-D-SL /V0 | 56.404.8855.0 | 74 |
| WKI SH/U /V0 | 01.108.3255.0 | 69 |
| WKIF 16 NT/35 | 56.716.8153.0 | 25 |
| WKIF 16 SL/35 | 56.716.9153.0 | 25 |
| WKIF 16/35 BLAU | 56.716.1153.6 | 25 |

# contents


| Type | Part no. | section / page |
|---|---|---|
| WKIF 16/35 GRAU | 56.716.1153.0 | 25 |
| WKIF 2,5 D | 56.703.9653.0 | 58 |
| WKIF 2,5 D-D | 56.703.9753.0 | 55 |
| WKIF 2,5 D-D-SL | 56.703.9853.0 | 55 |
| WKIF 2,5 N-D-SL | 56.703.9453.0 | 55 |
| WKIF 2,5 NT-D-SL | 56.703.9553.0 | 55 |
| WKIF/SH/35 | 01.108.7653.0 | 55 |
| WKM 2,5 / 15 BLAU/V0 | 55.503.1053.6 | 145 |
| WKM 2,5 / 15/V0 | 55.503.1053.0 | 145 |
| WKM 2,5 F1 / 15/V0 | 55.503.1253.0 | 144 |
| WKM 2,5 F2 / 15/V0 | 55.503.1353.0 | 144 |
| WKM 4 / 15/V0 | 55.504.1053.0 | 145 |
| WKM 4 SL / 15/V0 | 55.504.9153.0 | 145 |
| WKM 4 / 15 BLAU/V0 | 55.504.1053.6 | 145 |
| WKN 4ETK/U/V0 | 57.504.8155.0 | 69 |
| WKN 10/U /V0 | 57.510.0155.0 | 101 |
| WKN 10ETK/U/V0 | 57.510.8155.0 | 106 |
| WKN 16ETK/U/V0 | 57.516.8155.0 | 107 |
| WKN 70 SL/U | 57.570.9055.0 | 110 |
| WKN10 / U BL / V0 | 57.510.0155.6 | 101 |
| WKN10 SL/U /V0 | 57.510.9055.0 | 101 |
| WKN150 / U /V0 | 57.597.0155.0 | 105 |
| WKN150/ U BL / V0 | 57.597.0155.6 | 105 |
| WKN16 / U /V0 | 57.516.0155.0 | 104 |
| WKN16 / U BL / V0 | 57.516.0155.6 | 104 |
| WKN16 SL/U /V0 | 57.516.9055.0 | 109 |
| WKN2,5E / U V0 | 57.403.7055.0 | 116 |
| WKN2,5E / U VB SW/V0 | 57.403.6955.1 | 116 |
| WKN35 / U /V0 | 57.535.0155.0 | 101 |
| WKN35 / U BL / V0 | 57.535.0155.6 | 101 |
| WKN35 SL/U / V0 | 57.535.9055.0 | 101 |
| WKN70 / U /V0 | 57.570.0155.0 | 105 |
| WKN70 / U BL / V0 | 57.570.0155.6 | 105 |
| WPS-115/230-24V1A | 81.000.3010.0 | 524 |
| WPS-T115/230-60VA | 87.230.1553.0 | 525 |
| WR1-230-1W-250V4A | 80.010.0011.0 | 456 |
| WR1-DUO-2W-250V5A | 80.010.1100.0 | 458 |
| WR4-115-1W-250V4A | 80.010.1102.0 | 456 |
| WR4-115-2W-250V4A | 80.010.1104.0 | 458 |
| WR4-230-1W-250V4A | 80.010.1106.0 | 457 |
| WR4-230-2W-250V4A | 80.010.1108.0 | 459 |
| WR8-115-1W-250V4A | 80.010.1110.0 | 456 |
| WR8-115-2W-250V4A | 80.010.1112.0 | 458 |
| WR8-230-1W-250V4A | 80.010.1114.0 | 457 |
| WR8-230-2W-250V4A | 80.010.1116.0 | 459 |
| WRS-REL-1S-250V5A | 80.010.0005.0 | 460 |
| WRS-REL-1S-48V20M | 80.010.0007.0 | 460 |
| WRS-REL-1W-250V16 | 80.010.0010.0 | 461 |
| WRS-REL-1W-250V5A | 80.010.0008.0 | 460 |
| WRS-REL-1W-48V20M | 80.010.0009.0 | 460 |
| WRS-REL-2W-250V5A | 80.010.1003.0 | 461 |
| WRS-REL-2W-48V20M | 80.010.1002.0 | 461 |
| WRS-SSAC1-250V4A | 80.020.2001.0 | 481 |
| WRS-SSAC1-250V6A | 80.020.0004.0 | 481 |
| WRS-SSDC-60V3A | 80.020.2003.0 | 480 |
| WRS-SSDC-60V5A | 80.020.2004.0 | 480 |
| WRS-T115/230-300M | 81.000.3000.0 | 524 |
| WRS-TIMER-250V5A | 81.020.3000.0 | 463 |
| X L= 1000 MIT SCHIRM | 08.000.0106.0 | 569 |
| X L= 1000 OHNE SCHIRM | 08.000.0107.4 | 569 |
| X L= 1500 MIT SCHIRM | 08.000.0106.1 | 569 |
| X L= 1500 OHNE SCHIRM | 08.000.0107.5 | 569 |
| X L= 2000 MIT SCHIRM | 08.000.0106.2 | 569 |
| X L= 2000 OHNE SCHIRM | 08.000.0107.6 | 569 |
| X L= 2500 MIT SCHIRM | 08.000.0106.3 | 569 |
| X L= 2500 OHNE SCHIRM | 08.000.0107.7 | 569 |
| X L= 3000 MIT SCHIRM | 08.000.0106.4 | 569 |
| X L= 3000 OHNE SCHIRM | 08.000.0107.8 | 569 |
| X L= 3500 MIT SCHIRM | 08.000.0106.5 | 569 |
| X L= 4000 MIT SCHIRM | 08.000.0106.6 | 569 |
| X L= 4000 OHNE SCHIRM | 08.000.0108.0 | 569 |
| X L= 4500 MIT SCHIRM | 08.000.0106.7 | 569 |
| X L= 4500 OHNE SCHIRM | 08.000.0108.1 | 569 |
| X L= 5000 MIT SCHIRM | 08.000.0106.8 | 569 |
| X L= 5000 OHNE SCHIRM | 08.000.0108.2 | 569 |
| X L= 6000 MIT SCHIRM | 08.000.0106.9 | 569 |
| X L= 6000 OHNE SCHIRM | 08.000.0108.3 | 569 |
| X L= 7000 MIT SCHIRM | 08.000.0107.0 | 569 |
| X L= 7000 OHNE SCHIRM | 08.000.0108.4 | 569 |
| X L= 8000 MIT SCHIRM | 08.000.0107.1 | 569 |
| X L= 8000 OHNE SCHIRM | 08.000.0108.5 | 569 |
| X L= 9000 MIT SCHIRM | 08.000.0107.2 | 569 |
| X L= 9000 OHNE SCHIRM | 08.000.0108.6 | 569 |
| X L=10000 MIT SCHIRM | 08.000.0107.3 | 569 |
| X L=10000 OHNE SCHIRM | 08.000.0108.7 | 569 |
| Y BANDBREITE BIS 8M | 08.000.0108.9 | 569 |
| ZP 2,5 U/8113 S/V/V0 | 07.312.1655.0 | 136 |
| ZP 2,5 U/8113 S/V/V0 | 07.312.1655.0 | 310 |
| ZP 2,5 U/8113 S/V BL/V0 | 07.312.1655.6 | 311 |
| ZP 2,5 U/8113 S/V BL/V0 | 07.312.1655.6 | 137 |
| ZP 2,5 U/D/8113 S/V/V0 | 07.311.9155.0 | 312 |
| ZP 2,5 U/D/8113 S/V/V0 | 07.311.9155.0 | 134 |
| ZP2,5U/D/8113 S/V BL/V0 | 07.311.9155.6 | 313 |
| ZWISCHENPLATTE | 07.300.2753.0 | 374 |

# contents of part number

# contents PART NUMBER


| Part no. | Type | section / page |
|---|---|---|
| 01.001.5053.0 | ISOLIERGEHAEUSE | 584 |
| 01.001.5153.0 | ISOLIERGEHAEUSE | 584 |
| 01.001.5353.0 | ISOLIERGEHAEUSE | 586 |
| 01.001.5453.0 | ISOLIERGEHAEUSE | 586 |
| 01.001.5593.0 | | 588 |
| 01.001.5653.0 | ISOLIERGEHAEUSE | 588 |
| 01.001.5753.0 | ISOLIERGEHAEUSE | 588 |
| 01.001.5853.0 | ISOLIERGEHAEUSE | 588 |
| 01.001.5993.0 | | 588 |
| 01.001.6293.0 | | 591 |
| 01.001.6493.0 | | 590 |
| 01.001.6553.0 | ISOLIERGEHAEUSE | 590 |
| 01.001.6653.0 | ISOLIERGEHAEUSE | 590 |
| 01.001.6753.0 | ISOLIERGEHAEUSE | 590 |
| 01.060.0253.0 | 8113 BK / 2 | 291 |
| 01.060.0353.0 | 8113 BK / 3 | 291 |
| 01.060.0453.0 | 8113 BK / 4 | 291 |
| 01.060.0553.0 | 8113 BK / 5 | 291 |
| 01.060.0653.0 | 8113 BK / 6 | 291 |
| 01.060.0753.0 | 8113 BK / 7 | 291 |
| 01.060.0853.0 | 8113 BK / 8 | 291 |
| 01.060.0953.0 | 8113 BK / 9 | 291 |
| 01.060.1053.0 | 8113 BK / 10 | 291 |
| 01.060.1153.0 | 8113 BK / 11 | 291 |
| 01.060.1253.0 | 8113 BK / 12 | 291 |
| 01.060.1353.0 | 8113 BK / 13 | 291 |
| 01.060.1453.0 | 8113 BK / 14 | 291 |
| 01.060.1553.0 | 8113 BK / 15 | 291 |
| 01.060.1653.0 | 8113 BK / 16 | 291 |
| 01.060.3253.0 | 8113 BK / 2 OB | 291 |
| 01.060.3353.0 | 8113 BK / 3 OB | 291 |
| 01.060.3453.0 | 8113 BK / 4 OB | 291 |
| 01.060.3553.0 | 8113 BK / 5 OB | 291 |
| 01.060.3653.0 | 8113 BK / 6 OB | 291 |
| 01.060.3753.0 | 8113 BK / 7 OB | 291 |
| 01.060.3853.0 | 8113 BK / 8 OB | 291 |
| 01.060.3953.0 | 8113 BK / 9 OB | 291 |
| 01.060.4053.0 | 8113 BK / 10 OB | 291 |
| 01.060.4153.0 | 8113 BK / 11 OB | 291 |
| 01.060.4253.0 | 8113 BK / 12 OB | 291 |
| 01.060.4353.0 | 8113 BK / 13 OB | 291 |
| 01.060.4453.0 | 8113 BK / 14 OB | 291 |
| 01.060.4553.0 | 8113 BK / 15 OB | 291 |
| 01.060.4653.0 | 8113 BK / 16 OB | 291 |
| 01.108.3255.0 | WKI SH/U /V0 | 69 |
| 01.108.7653.0 | WKIF/SH/35 | 55 |
| 01.112.1453.0 | 9701 A SH S35 | 193 |
| 01.299.9753.0 | | 177 |
| 02.123.7001.0 | | 631 |
| 02.123.7021.0 | FUER 0,5 MM2 | 631 |
| 02.123.7101.0 | | 631 |
| 02.123.7121.0 | FUER 0,75-1 MM2 | 631 |
| 02.123.7201.0 | FUER 1,5 MM2 VERGOLD | 631 |
| 02.123.7221.0 | FUER 1,5 MM2 | 631 |
| 02.123.7301.0 | | 631 |
| 02.123.7321.0 | FUER 2,5 MM2 | 631 |
| 02.123.7401.0 | | 631 |
| 02.123.7421.0 | FUER 4 MM2 | 631 |
| 02.124.0900.0 | 0,2 -0,56 QMM | 683 |
| 02.124.0929.0 | 0,2 -0,56 QMM | 683 |
| 02.124.1000.0 | 0,5 -01,5 QMM | 683 |
| 02.124.1029.0 | 0,5 -1,5 QMM | 683 |
| 02.124.1400.0 | 0,5 -1,5 QMM VERGOLDET | 683 |
| 02.124.1429.0 | 0,5 -1,5 QMM VERGOLDET | 683 |
| 02.124.4000.0 | | 207 |
| 02.124.4029.0 | FEDERKONTAKT | 207 |
| 02.124.4100.0 | FEDERKONTAKT | 207 |
| 02.124.4129.0 | | 207 |
| 02.125.1121.0 | BUCHSENKONTAKT | 761 |
| 02.125.1600.0 | FEDERKONTAKT BAND | 291 |
| 02.125.1629.0 | FEDERKONTAKT | 291 |
| 02.125.1700.0 | FEDERKONTAKT BAND | 291 |
| 02.125.1729.0 | FEDERKONTAKT | 291 |
| 02.125.3129.8 | BUCHSENKONTAKT | 739 |
| 02.125.3229.8 | BUCHSENKONTAKT | 740 |
| 02.125.3329.8 | BUCHSENKONTAKT | 740 |
| 02.125.3429.8 | BUCHSENKONTAKT | 740 |
| 02.125.3529.8 | BUCHSENKONTAKT | 740 |
| 02.125.3629.8 | BUCHSENKONTAKT | 740 |
| 02.125.3729.8 | BUCHSENKONTAKT | 740 |
| 02.125.3829.8 | BUCHSENKONTAKT | 740 |
| 02.125.3929.8 | BUCHSENKONTAKT | 740 |
| 02.125.4029.8 | BUCHSENKONTAKT | 740 |
| 02.125.4129.8 | BUCHSENKONTAKT | 740 |
| 02.125.4229.8 | BUCHSENKONTAKT | 740 |
| 02.125.4329.8 | BUCHSENKONTAKT | 740 |
| 02.125.4429.8 | BUCHSENKONTAKT | 740 |
| 02.125.4529.8 | BUCHSENKONTAKT | 740 |
| 02.125.4629.7 | BUCHSENKONTAKT | 740 |
| 02.125.4729.7 | BUCHSENKONTAKT | 740 |
| 02.220.0121.0 | FKK18 / 1 | 217 |
| 02.220.0321.0 | FKK18 / 2 | 217 |
| 02.220.0421.0 | FKK18 / 3 | 217 |
| 04.007.1080.0 | BZ KL 28 / 1 - 99 | 214 |
| 04.007.3080.0 | BZ KL 29 / 1 - 55 | 214 |
| 04.007.4089.0 | BZ 8190 / 1 - 12 | 306 |
| 04.007.4189.0 | BZ 8190 / 13 - 24 | 306 |
| 04.007.4289.0 | BZ 8190 / 25 - 36 | 306 |
| 04.007.4389.0 | BZ 8190 / 37 - 48 | 306 |
| 04.007.4489.0 | BZ 8190 / 49 - 60 | 306 |
| 04.007.4589.0 | BZ 8190 / 61 - 72 | 306 |
| 04.007.4689.0 | BZ 8190 / 73 - 84 | 306 |
| 04.007.4789.0 | BZ 8190 / 85 - 96 | 306 |
| 04.007.4889.0 | BZ 8190 / 97 - 108 | 306 |
| 04.019.0289.0 | BEZ.BLATT PERF. | 47 |
| 04.019.0889.0 | BEZ.BLATT PERF. | 183 |
| 04.030.0080.0 | 8006 / 2 BZ | 260 |
| 04.030.0180.0 | 8006 / 3 BZ | 260 |
| 04.030.0280.0 | 8006 / 4 BZ | 260 |
| 04.030.0380.0 | 8006 / 5 BZ | 260 |
| 04.030.0480.0 | 8006 / 6 BZ | 260 |
| 04.030.1080.0 | 8006 / 12 BZ | 260 |
| 04.030.1180.0 | 8006 M BZ | 260 |
| 04.033.0080.0 | | 260 |
| 04.033.0180.0 | 8130 / 3 BZ | 260 |
| 04.033.0280.0 | 8130 / 4 BZ | 260 |
| 04.033.0380.0 | 8130 / 5 BZ | 260 |
| 04.033.0480.0 | 8130 / 6 BZ | 260 |
| 04.033.1080.0 | 8130 / 12 BZ | 260 |
| 04.033.1180.0 | 8130 M BZ | 260 |
| 04.070.0280.0 | 10E / 2 BZ | 260 |
| 04.070.0380.0 | 10E / 3 BZ | 260 |
| 04.070.0480.0 | 10E / 4 BZ | 260 |
| 04.070.0580.0 | 10E / 5 BZ | 260 |
| 04.070.0680.0 | 10E / 6 BZ | 260 |
| 04.070.1280.0 | 10E / 12 BZ | 260 |
| 04.070.1380.0 | 10E / M BZ | 260 |
| 04.071.0280.0 | | 260 |
| 04.071.0380.0 | | 260 |
| 04.071.0480.0 | | 260 |
| 04.071.0580.0 | | 260 |
| 04.071.0680.0 | | 260 |
| 04.071.1280.0 | 10E / 12 DBZ | 260 |
| 04.071.1380.0 | | 260 |
| 04.080.0080.0 | 8016 / 2 BZ | 260 |
| 04.080.0180.0 | 8016 / 3 BZ | 260 |
| 04.080.0280.0 | 8016 / 4 BZ | 260 |
| 04.080.0380.0 | 8016 / 5 BZ | 260 |
| 04.080.0480.0 | 8016 / 6 BZ | 260 |
| 04.080.1080.0 | 8016 / 12 BZ | 260 |
| 04.080.1180.0 | 8016 M BZ | 260 |
| 04.090.0280.0 | 16E / 2 BZ | 260 |
| 04.090.0380.0 | 16E / 3 BZ | 260 |
| 04.090.0480.0 | 16E / 4 BZ | 260 |
| 04.090.0580.0 | 16E / 5 BZ | 260 |
| 04.090.0680.0 | 16E / 6 BZ | 260 |
| 04.090.1280.0 | 16E / 12 BZ | 260 |
| 04.090.1380.0 | 16E / M BZ | 260 |
| 04.210.0652.0 | BEZ.KLAPPSCHILD | 183 |
| 04.210.0752.0 | BEZ.KLAPPSCHILD | 183 |
| 04.232.0051.0 | BZ 12 | 218 |
| 04.240.0953.0 | BEZ.-SCHILD | 392 |
| 04.241.0651.0 | 9003 C | 584 |
| 04.241.1150.0 | 9704 A | 181 |
| 04.241.1150.0 | 9704 A | 598 |
| 04.241.1150.0 | 9704 A | 791 |
| 04.242.0651.0 | | 592 |
| 04.242.0800.0 | | 349 |
| 04.242.0850.0 | 9705 A | 90 |
| 04.242.0850.0 | 9705 A | 321 |
| 04.242.0850.0 | 9705 A | 588 |
| 04.242.0850.0 | 9705 A | 790 |
| 04.242.1050.0 | 9003 C / 4 | 394 |
| 04.242.1050.0 | 9003 C / 4 | 584 |
| 04.242.1553.0 | 9705 AL | 90 |
| 04.242.1553.0 | 9705 AL | 394 |
| 04.242.1553.0 | 9705 AL | 410 |
| 04.242.1553.0 | 9705 AL | 790 |
| 04.242.2853.0 | 9705 A / 4 W | 790 |
| 04.242.3053.0 | 9705 A / 6,7/6-90GRAD | 790 |
| 04.242.3253.0 | | 204 |
| 04.242.3353.0 | 9705 A / 6.7/9-90GRAD 3 | 790 |
| 04.242.3453.0 | 9705 A / 6,7/6-90GRAD 5 | 790 |
| 04.242.3553.0 | 9705 A / 6,7/6-90GRAD 8 | 790 |
| 04.242.3653.0 | 9705 A / 6,7/6-90GRAD12 | 790 |
| 04.242.3853.0 | BEZ.SCHILDTRAEGER | 781 |
| 04.242.4253.0 | BEZ.SCHILDTRAEGER | 349 |
| 04.242.4453.0 | BEZ.SCHILDTRAEGER | 781 |
| 04.242.4653.0 | BEZ.SCHILDTRAEGER | 357 |
| 04.242.5053.0 | 9705 A / 5 / 10 | 91 |
| 04.242.5053.0 | 9705 A / 5 / 10 | 349 |
| 04.242.5053.0 | 9705 A / 5 / 10 | 596 |
| 04.242.5053.0 | 9705 A / 5 / 10 | 790 |
| 04.242.5153.0 | 9705 A L / 5/ 10 | 91 |
| 04.242.5153.0 | 9705 A L / 5/ 10 | 394 |
| 04.242.5153.0 | 9705 A L / 5/ 10 | 596 |
| 04.242.5153.0 | 9705 A L / 5/ 10 | 790 |
| 04.242.5853.0 | BEZ.SCHILDTRAEGER | 349 |
| 04.242.6053.0 | 9705 A / 6 / 10 | 91 |
| 04.242.6353.0 | 9705 A L / 6/ 10 | 91 |
| 04.242.6753.0 | 9705A/6,7/ 12 | 790 |
| 04.242.7553.0 | 9705 A / 7,5 / 10 | 351 |
| 04.242.8053.0 | 9705 A / 8 / 10 | 201 |
| 04.244.1853.0 | WIEBOX CN BZ | 502 |
| 04.249.1053.0 | BEZ.PLATTE | 499 |
| 04.249.1553.0 | BEZ.PLATTE | 499 |
| 04.249.2053.0 | BEZ.PLATTE | 499 |
| 04.249.4053.0 | BEZ.PLATTE | 499 |
| 04.312.0554.0 | ABDECKUNG | 584 |
| 04.312.0654.0 | ABDECKUNG | 584 |
| 04.312.2056.0 | ABDECKUNG | 125 |
| 04.312.3054.0 | ABDECKUNG | 585 |
| 04.312.3154.0 | | 586 |
| 04.312.3254.0 | ABDECKUNG | 587 |
| 04.312.3354.0 | ABDECKUNG | 585 |
| 04.312.3454.0 | ABDECKUNG | 586 |
| 04.312.3554.0 | ABDECKUNG | 587 |
| 04.325.1056.0 | ABDECKG.M.WARNZCH | 189 |
| 04.325.1156.0 | ABDECKG.M.WARNZCH | 189 |
| 04.325.1256.0 | ABDECKG.M.WARNZCH | 189 |
| 04.325.1356.0 | ABDECKG.M.WARNZCH | 191 |
| 04.325.1456.0 | ABDECKG.M.WARNZCH | 189 |
| 04.325.1656.0 | ABDECKG.M.WARNZCH | 189 |
| 04.325.8553.8 | FUER WKI 10/U | 69 |
| 04.325.8653.8 | FUER WKI 16/U | 79 |
| 04.325.8753.0 | | 86 |
| 04.325.8753.8 | | 79 |
| 04.326.0056.0 | ABDECKUNG | 152 |
| 04.326.1053.0 | ABDECKUNG | 128 |
| 04.326.2053.0 | | 310 |
| 04.326.2053.8 | AD VB 2,5 GELB | 101 |
| 04.326.2053.8 | AD VB 2,5 GELB | 312 |
| 04.326.2153.8 | AD VB 4 GELB | 78 |
| 04.326.2253.8 | AD VB 6 GELB | 103 |
| 04.326.2353.8 | AD VB 10 GELB | 82 |
| 04.326.2453.8 | AD VB 16 GELB | 69 |
| 04.326.2553.8 | AD VB 35 GELB | 105 |
| 04.326.2653.8 | AD VB 70 GELB | 105 |
| 04.326.2953.8 | AD VB 4 / 15 GELB | 114 |
| 04.326.3053.8 | AD VB WKM 2,5 / 15 GELB | 144 |
| 04.342.0556.0 | AD VB 5 / 10 | 120 |
| 04.342.0556.8 | AD VB 5 / 10 GELB | 116 |
| 04.342.0653.8 | | 140 |
| 04.342.0656.8 | AD VB 6/10 GELB | 112 |
| 04.342.1056.8 | AD VB 10/10 GELB | 78 |
| 04.342.2656.8 | AD VB 6 / 10 E GELB | 114 |
| 04.342.3556.8 | AD VB 5 / 10 P GELB | 102 |
| 04.342.3556.8 | AD VB 5 / 10 P GELB | 312 |
| 04.342.3656.8 | AD VB 6/10 P GELB | 103 |
| 04.342.3856.8 | AD VB 8/10 P GELB | 103 |
| 04.342.4056.8 | AD VB 10/10 P GELB | 103 |
| 04.342.5656.8 | AD VB 6 / 10 E P GELB | 174 |
| 04.343.4756.8 | ABDECKG.M.WARNZCH | 102 |
| 04.343.4856.8 | ABDECKG.M.WARNZCH | 69 |
| 04.343.4956.8 | ABDECKG.M.WARNZCH | 103 |
| 04.343.5056.8 | ABDECKG.M.WARNZCH | 103 |
| 04.343.5156.8 | ABDECKG.M.WARNZCH | 104 |
| 04.343.5256.8 | ABDECKG.M.WARNZCH | 105 |
| 04.343.5356.8 | ABDECKG M WARNZCH | 105 |
| 04.343.5456.8 | ABDECKG M WARNZCH | 105 |
| 04.343.5856.6 | | 86 |
| 04.343.5856.8 | | 82 |
| 04.343.6053.8 | ADF 2,5/4 GELB | 20 |
| 04.343.6053.8 | ADF 2,5/4 GELB | 308 |
| 04.343.6153.8 | ADF 4/4 GELB | 19 |
| 04.343.6253.8 | ADF 6/4 GELB | 21 |
| 04.343.6453.8 | ADF10/4 GELB | 21 |
| 04.343.6653.8 | ADF16/4 GELB | 21 |
| 04.343.6853.8 | ABDECKUNG | 36 |
| 04.343.6853.8 | ABDECKUNG | 308 |
| 04.343.8053.0 | AD VM-1,5/8 SCHWARZ | 45 |
| 04.343.8353.8 | ABDECKUNG | 33 |
| 04.343.9056.0 | | 310 |
| 04.343.9056.8 | ABDECKSTREIFEN | 134 |
| 04.343.9056.8 | ABDECKSTREIFEN | 312 |
| 04.343.9156.0 | | 310 |
| 04.343.9156.8 | ABDECKG.M.WARNZCH | 134 |
| 04.343.9156.8 | ABDECKG.M.WARNZCH | 312 |
| 04.344.0153.8 | .ADC 1 GELB | 232 |
| 04.344.0353.8 | ADC 2,5 GELB | 231 |
| 04.832.0051.0 | BZ 12 B | 218 |
| 04.841.0651.0 | 9003 C B | 584 |
| 04.841.1150.0 | 9704 A / 1 B | 181 |
| 04.841.1150.0 | 9704 A / 1 B | 395 |
| 04.841.1150.0 | 9704 A / 1 B | 598 |
| 04.841.1150.0 | 9704 A / 1 B | 791 |
| 04.841.1250.0 | 9704 A / 2 B | 181 |
| 04.841.1250.0 | 9704 A / 2 B | 395 |
| 04.841.1250.0 | 9704 A / 2 B | 598 |
| 04.841.1250.0 | 9704 A / 2 B | 791 |
| 04.841.1350.0 | 9704 A / 3 B | 181 |
| 04.841.1350.0 | 9704 A / 3 B | 395 |
| 04.841.1350.0 | 9704 A / 3 B | 598 |
| 04.841.1350.0 | 9704 A / 3 B | 791 |
| 04.841.1450.0 | 9704 A / 4 B | 181 |

# contents


| Part no. | Type | section / page |
|---|---|---|
| 04.841.1450.0 | 9704 A / 4 B | 395 |
| 04.841.1450.0 | 9704 A / 4 B | 598 |
| 04.841.1450.0 | 9704 A / 4 B | 791 |
| 04.841.1550.0 | 9704 A / 5 B | 181 |
| 04.841.1550.0 | 9704 A / 5 B | 395 |
| 04.841.1550.0 | 9704 A / 5 B | 598 |
| 04.841.1550.0 | 9704 A / 5 B | 791 |
| 04.841.1650.0 | 9704 A / 6 B | 181 |
| 04.841.1650.0 | 9704 A / 6 B | 395 |
| 04.841.1650.0 | 9704 A / 6 B | 598 |
| 04.841.1650.0 | 9704 A / 6 B | 791 |
| 04.841.1750.0 | 9704 A / 7 B | 181 |
| 04.841.1750.0 | 9704 A / 7 B | 395 |
| 04.841.1750.0 | 9704 A / 7 B | 598 |
| 04.841.1750.0 | 9704 A / 7 B | 791 |
| 04.841.1850.0 | 9704 A / 8 B | 181 |
| 04.841.1850.0 | 9704 A / 8 B | 395 |
| 04.841.1850.0 | 9704 A / 8 B | 598 |
| 04.841.1850.0 | 9704 A / 8 B | 791 |
| 04.841.1950.0 | 9704 A / 9 B | 181 |
| 04.841.1950.0 | 9704 A / 9 B | 395 |
| 04.841.1950.0 | 9704 A / 9 B | 598 |
| 04.841.1950.0 | 9704 A / 9 B | 791 |
| 04.841.2050.0 | 9704 A / 0 B | 181 |
| 04.841.2050.0 | 9704 A / 0 B | 395 |
| 04.841.2050.0 | 9704 A / 0 B | 598 |
| 04.841.2050.0 | 9704 A / 0 B | 791 |
| 04.841.2150.0 | 9704 A / 1-0 B | 181 |
| 04.841.2150.0 | 9704 A / 1-0 B | 349 |
| 04.841.2150.0 | 9704 A / 1-0 B | 598 |
| 04.841.2150.0 | 9704 A / 1-0 B | 791 |
| 04.841.2250.0 | 9704 A /AG B | 395 |
| 04.841.2250.0 | 9704 A /AG B | 598 |
| 04.841.2250.0 | 9704 A /AG B | 791 |
| 04.841.2350.0 | 9704 A /BG B | 395 |
| 04.841.2350.0 | 9704 A /BG B | 598 |
| 04.841.2350.0 | 9704 A /BG B | 791 |
| 04.841.2450.0 | 9704 A /CG B | 395 |
| 04.841.2450.0 | 9704 A /CG B | 598 |
| 04.841.2450.0 | 9704 A /CG B | 791 |
| 04.841.2550.0 | 9704 A /DG B | 395 |
| 04.841.2550.0 | 9704 A /DG B | 598 |
| 04.841.2550.0 | 9704 A /DG B | 791 |
| 04.841.2650.0 | 9704 A /EG B | 395 |
| 04.841.2650.0 | 9704 A /EG B | 598 |
| 04.841.2650.0 | 9704 A /EG B | 791 |
| 04.841.2750.0 | 9704 A /FG B | 395 |
| 04.841.2750.0 | 9704 A /FG B | 598 |
| 04.841.2750.0 | 9704 A /FG B | 791 |
| 04.841.2850.0 | 9704 A /GG B | 395 |
| 04.841.2850.0 | 9704 A /GG B | 598 |
| 04.841.2850.0 | 9704 A /GG B | 791 |
| 04.841.2950.0 | 9704 A /HG B | 395 |
| 04.841.2950.0 | 9704 A /HG B | 598 |
| 04.841.2950.0 | 9704 A /HG B | 791 |
| 04.841.3050.0 | 9704 A /IG B | 395 |
| 04.841.3050.0 | 9704 A /IG B | 598 |
| 04.841.3050.0 | 9704 A /IG B | 791 |
| 04.841.3150.0 | 9704 A /JG B | 395 |
| 04.841.3150.0 | 9704 A /JG B | 598 |
| 04.841.3150.0 | 9704 A /JG B | 791 |
| 04.841.3250.0 | 9704 A /KG B | 395 |
| 04.841.3250.0 | 9704 A /KG B | 598 |
| 04.841.3250.0 | 9704 A /KG B | 791 |
| 04.841.3350.0 | 9704 A /LG B | 395 |
| 04.841.3350.0 | 9704 A /LG B | 598 |
| 04.841.3350.0 | 9704 A /LG B | 791 |
| 04.841.3450.0 | 9704 A /MG B | 395 |
| 04.841.3450.0 | 9704 A /MG B | 598 |
| 04.841.3450.0 | 9704 A /MG B | 791 |
| 04.841.3550.0 | 9704 A /NG B | 395 |
| 04.841.3550.0 | 9704 A /NG B | 598 |
| 04.841.3550.0 | 9704 A /NG B | 791 |
| 04.841.3650.0 | 9704 A /OG B | 395 |
| 04.841.3650.0 | 9704 A /OG B | 598 |
| 04.841.3650.0 | 9704 A /OG B | 791 |
| 04.841.3750.0 | 9704 A /PG B | 395 |
| 04.841.3750.0 | 9704 A /PG B | 598 |
| 04.841.3750.0 | 9704 A /PG B | 791 |
| 04.841.3850.0 | 9704 A /QG B | 395 |
| 04.841.3850.0 | 9704 A /QG B | 598 |
| 04.841.3850.0 | 9704 A /QG B | 791 |
| 04.841.3950.0 | 9704 A /RG B | 395 |
| 04.841.3950.0 | 9704 A /RG B | 598 |
| 04.841.3950.0 | 9704 A /RG B | 791 |
| 04.841.4050.0 | 9704 A /SG B | 395 |
| 04.841.4050.0 | 9704 A /SG B | 598 |
| 04.841.4050.0 | 9704 A /SG B | 791 |
| 04.841.4150.0 | 9704 A /TG B | 395 |
| 04.841.4150.0 | 9704 A /TG B | 598 |
| 04.841.4150.0 | 9704 A /TG B | 791 |
| 04.841.4250.0 | 9704 A /UG B | 395 |
| 04.841.4250.0 | 9704 A /UG B | 598 |
| 04.841.4250.0 | 9704 A /UG B | 791 |
| 04.841.4350.0 | 9704 A /VG B | 395 |
| 04.841.4350.0 | 9704 A /VG B | 598 |
| 04.841.4350.0 | 9704 A /VG B | 791 |
| 04.841.4450.0 | 9704 A /WG B | 395 |
| 04.841.4450.0 | 9704 A /WG B | 598 |
| 04.841.4450.0 | 9704 A /WG B | 791 |
| 04.841.4550.0 | 9704 A /XG B | 395 |
| 04.841.4550.0 | 9704 A /XG B | 598 |
| 04.841.4550.0 | 9704 A /XG B | 791 |
| 04.841.4650.0 | 9704 A /YG B | 395 |
| 04.841.4650.0 | 9704 A /YG B | 598 |
| 04.841.4650.0 | 9704 A /YG B | 791 |
| 04.841.4750.0 | 9704 A /ZG B | 395 |
| 04.841.4750.0 | 9704 A /ZG B | 598 |
| 04.841.4750.0 | 9704 A /ZG B | 791 |
| 04.841.4850.0 | 9704 A /AK B | 395 |
| 04.841.4850.0 | 9704 A /AK B | 599 |
| 04.841.4850.0 | 9704 A /AK B | 791 |
| 04.841.4950.0 | 9704 A /BK B | 395 |
| 04.841.4950.0 | 9704 A /BK B | 599 |
| 04.841.4950.0 | 9704 A /BK B | 791 |
| 04.841.5050.0 | 9704 A /CK B | 395 |
| 04.841.5050.0 | 9704 A /CK B | 599 |
| 04.841.5050.0 | 9704 A /CK B | 791 |
| 04.841.5150.0 | 9704 A /DK B | 395 |
| 04.841.5150.0 | 9704 A /DK B | 599 |
| 04.841.5150.0 | 9704 A /DK B | 791 |
| 04.841.5250.0 | 9704 A /EK B | 395 |
| 04.841.5250.0 | 9704 A /EK B | 599 |
| 04.841.5250.0 | 9704 A /EK B | 791 |
| 04.841.5350.0 | 9704 A /FK B | 395 |
| 04.841.5350.0 | 9704 A /FK B | 599 |
| 04.841.5350.0 | 9704 A /FK B | 791 |
| 04.841.5450.0 | 9704 A /GK B | 395 |
| 04.841.5450.0 | 9704 A /GK B | 599 |
| 04.841.5450.0 | 9704 A /GK B | 791 |
| 04.841.5550.0 | 9704 A /HK B | 395 |
| 04.841.5550.0 | 9704 A /HK B | 599 |
| 04.841.5550.0 | 9704 A /HK B | 791 |
| 04.841.5650.0 | 9704 A /IK B | 395 |
| 04.841.5650.0 | 9704 A /IK B | 599 |
| 04.841.5650.0 | 9704 A /IK B | 791 |
| 04.841.5750.0 | 9704 A /JK B | 395 |
| 04.841.5750.0 | 9704 A /JK B | 791 |
| 04.841.5850.0 | 9704 A /KK B | 395 |
| 04.841.5850.0 | 9704 A /KK B | 791 |
| 04.841.5950.0 | 9704 A /LK B | 395 |
| 04.841.5950.0 | 9704 A /LK B | 791 |
| 04.841.6050.0 | 9704 A /MK B | 395 |
| 04.841.6050.0 | 9704 A /MK B | 599 |
| 04.841.6050.0 | 9704 A /MK B | 791 |
| 04.841.6150.0 | 9704 A /NK B | 395 |
| 04.841.6150.0 | 9704 A /NK B | 599 |
| 04.841.6150.0 | 9704 A /NK B | 791 |
| 04.841.6250.0 | 9704 A /OK B | 395 |
| 04.841.6250.0 | 9704 A /OK B | 599 |
| 04.841.6250.0 | 9704 A /OK B | 791 |
| 04.841.6350.0 | 9704 A /PK B | 395 |
| 04.841.6350.0 | 9704 A /PK B | 599 |
| 04.841.6350.0 | 9704 A /PK B | 791 |
| 04.841.6450.0 | 9704 A /QK B | 395 |
| 04.841.6450.0 | 9704 A /QK B | 599 |
| 04.841.6450.0 | 9704 A /QK B | 791 |
| 04.841.6550.0 | 9704 A /RK B | 395 |
| 04.841.6550.0 | 9704 A /RK B | 599 |
| 04.841.6550.0 | 9704 A /RK B | 791 |
| 04.841.6650.0 | 9704 A /SK B | 395 |
| 04.841.6650.0 | 9704 A /SK B | 599 |
| 04.841.6650.0 | 9704 A /SK B | 791 |
| 04.841.6750.0 | 9704 A /TK B | 395 |
| 04.841.6750.0 | 9704 A /TK B | 599 |
| 04.841.6750.0 | 9704 A /TK B | 791 |
| 04.841.6850.0 | 9704 A /UK B | 395 |
| 04.841.6850.0 | 9704 A /UK B | 599 |
| 04.841.6850.0 | 9704 A /UK B | 791 |
| 04.841.6950.0 | 9704 A /VK B | 395 |
| 04.841.6950.0 | 9704 A /VK B | 599 |
| 04.841.6950.0 | 9704 A /VK B | 791 |
| 04.841.7050.0 | 9704 A /WK B | 395 |
| 04.841.7050.0 | 9704 A /WK B | 599 |
| 04.841.7050.0 | 9704 A /WK B | 791 |
| 04.841.7150.0 | 9704 A /XK B | 395 |
| 04.841.7150.0 | 9704 A /XK B | 599 |
| 04.841.7150.0 | 9704 A /XK B | 791 |
| 04.841.7250.0 | 9704 A /YK B | 395 |
| 04.841.7250.0 | 9704 A /YK B | 599 |
| 04.841.7250.0 | 9704 A /YK B | 791 |
| 04.841.7350.0 | 9704 A /ZK B | 395 |
| 04.841.7350.0 | 9704 A /ZK B | 599 |
| 04.841.7350.0 | 9704 A /ZK B | 791 |
| 04.841.7450.0 | 9704 A /+ B | 181 |
| 04.841.7450.0 | 9704 A /+ B | 395 |
| 04.841.7450.0 | 9704 A /+ B | 599 |
| 04.841.7450.0 | 9704 A /+ B | 791 |
| 04.841.7550.0 | 9704 A /- B | 181 |
| 04.841.7550.0 | 9704 A /- B | 395 |
| 04.841.7550.0 | 9704 A /- B | 599 |
| 04.841.7550.0 | 9704 A /- B | 791 |
| 04.841.7650.0 | 9704 A // B | 181 |
| 04.841.7650.0 | 9704 A // B | 395 |
| 04.841.7650.0 | 9704 A // B | 599 |
| 04.841.7650.0 | 9704 A // B | 791 |
| 04.841.7750.0 | 9704 A /. B | 181 |
| 04.841.7750.0 | 9704 A /. B | 395 |
| 04.841.7750.0 | 9704 A /. B | 599 |
| 04.841.7750.0 | 9704 A /. B | 791 |
| 04.841.9050.0 | 111..BIS 000.. | 181 |
| 04.841.9050.0 | 111..BIS 000.. | 395 |
| 04.841.9050.0 | 111..BIS 000.. | 791 |
| 04.841.9150.0 | A BIS Z GB | 181 |
| 04.841.9150.0 | A BIS Z GB | 395 |
| 04.841.9150.0 | A BIS Z GB | 791 |
| 04.841.9250.0 | A BIS Z KB | 181 |
| 04.841.9250.0 | A BIS Z KB | 395 |
| 04.841.9250.0 | A BIS Z KB | 791 |
| 04.842.0153.0 | | 101 |
| 04.842.0651.0 | | 592 |
| 04.842.0850.0 | 9705 A B | 90 |
| 04.842.0850.0 | 9705 A B | 321 |
| 04.842.0850.0 | 9705 A B | 588 |
| 04.842.0850.0 | 9705 A B | 790 |
| 04.842.1553.0 | 9705 AL B | 90 |
| 04.842.1553.0 | 9705 AL B | 394 |
| 04.842.1553.0 | 9705 AL B | 596 |
| 04.842.1553.0 | 9705 AL B | 790 |
| 04.842.4953.0 | 9705A/5/ 9 B 1- 9 | 91 |
| 04.842.4953.0 | 9705A/5/ 9 B 1- 9 | 394 |
| 04.842.4953.0 | 9705A/5/ 9 B 1- 9 | 596 |
| 04.842.5053.0 | 9705 A / 5 / 10 B | 55 |
| 04.842.5053.0 | 9705 A / 5 / 10 B | 349 |
| 04.842.5053.0 | 9705 A / 5 / 10 B | 596 |
| 04.842.5053.0 | 9705 A / 5 / 10 B | 790 |
| 04.842.5153.0 | 9705 A L / 5/ 10 B | 790 |
| 04.842.5553.0 | 9705 A / 5 / 10 / 5 B | 55 |
| 04.842.5553.0 | 9705 A / 5 / 10 / 5 B | 394 |
| 04.842.5553.0 | 9705 A / 5 / 10 / 5 B | 596 |
| 04.842.5953.0 | 9705A/6/ 9 B 1- 9 | 91 |
| 04.842.6053.0 | 9705 A / 6 / 10 B | 69 |
| 04.842.6553.0 | 9705 A / 6 / 10 / 5 B | 69 |
| 04.842.6753.0 | 9705A/6,7/ 12 B | 790 |
| 04.842.7553.0 | 9705 A / 7,5 / 10 B | 351 |
| 04.842.7953.0 | 9705A/8/ 9 B 1- 9 | 201 |
| 04.842.8053.0 | 9705 A / 8 / 10 B | 189 |
| 04.842.8553.0 | 9705 A / 8 / 10 / 5 B | 91 |
| 04.845.0153.0 | 9705A/5/10 B 1- 10 | 91 |
| 04.845.0253.0 | 9705A/5/10 B 11- 20 | 91 |
| 04.845.0353.0 | 9705A/5/10 B 21- 30 | 91 |
| 04.845.0453.0 | 9705A/5/10 B 31- 40 | 91 |
| 04.845.0553.0 | 9705A/5/10 B 41- 50 | 91 |
| 04.845.0653.0 | 9705A/5/10 B 51- 60 | 91 |
| 04.845.0753.0 | 9705A/5/10 B 61- 70 | 91 |
| 04.845.0853.0 | 9705A/5/10 B 71- 80 | 91 |
| 04.845.0953.0 | 9705A/5/10 B 81- 90 | 91 |
| 04.845.1053.0 | 9705A/5/10 B 91-100 | 91 |
| 04.846.0153.0 | 9705A/6/10 B 1- 10 | 91 |
| 04.846.0253.0 | 9705A/6/10 B 11- 20 | 91 |
| 04.846.0353.0 | 9705A/6/10 B 21- 30 | 91 |
| 04.846.0453.0 | 9705A/6/10 B 31- 40 | 91 |
| 04.846.0553.0 | 9705A/6/10 B 41- 50 | 91 |
| 04.846.0653.0 | 9705A/6/10 B 51- 60 | 91 |
| 04.846.0753.0 | 9705A/6/10 B 61- 70 | 91 |
| 04.846.0853.0 | 9705A/6/10 B 71- 80 | 91 |
| 04.846.0953.0 | 9705A/6/10 B 81- 90 | 91 |
| 04.846.1053.0 | 9705A/6/10 B 91-100 | 91 |
| 04.848.0153.0 | 9705A/8/10 B 1- 10 | 201 |
| 04.848.0253.0 | 9705A/8/10 B 11- 20 | 201 |
| 04.848.0353.0 | 9705A/8/10 B 21- 30 | 201 |
| 04.848.0453.0 | 9705A/8/10 B 31- 40 | 201 |
| 04.848.0553.0 | 9705A/8/10 B 41- 50 | 201 |
| 04.848.0653.0 | 9705A/8/10 B 51- 60 | 201 |
| 04.848.0753.0 | 9705A/8/10 B 61- 70 | 201 |
| 04.848.0853.0 | 9705A/8/10 B 71- 80 | 201 |
| 04.848.0953.0 | 9705A/8/10 B 81- 90 | 201 |
| 04.848.1053.0 | 9705A/8/10 B 91-100 | 201 |
| 04.855.0053.0 | 9705A/5/10B SLZ | 91 |
| 04.855.0153.0 | 9705A/5/10B ERDZ | 91 |
| 04.855.0253.0 | 9705A/5/10 B + | 91 |
| 04.855.0253.5 | 9705A/5/10 B + ROT | 120 |
| 04.855.0353.0 | 9705A/5/10 B - | 91 |
| 04.855.0353.6 | 9705A/5/10 B - BLAU | 120 |
| 04.855.0453.0 | 9705A/5/10B L1 | 91 |
| 04.855.0553.0 | 9705A/5/10B L2 | 91 |
| 04.855.0653.0 | 9705A/5/10B L3 | 91 |
| 04.855.0753.0 | 9705A/5/10B PE | 91 |
| 04.855.0853.0 | 9705A/5/10B L1L2L3NPE.. | 91 |
| 04.855.0953.0 | 9705A/5/10B F1 | 91 |
| 04.855.1053.0 | 9705A/5/10B F2 | 91 |
| 04.855.3153.0 | 9705A/5/10B SL | 91 |
| 04.855.3253.0 | 9705A/5/10B N | 91 |
| 04.856.0053.0 | 9705A/6/10 B SLZ | 91 |
| 04.856.0153.0 | 9705A/6/10 B ERDZ | 91 |

# contents of part number

# contents PART NUMBER


| Part no. | Type | section / page |
|---|---|---|
| 04.856.0253.0 | 9705A/6/10B + | 91 |
| 04.856.0353.0 | 9705A/6/10B - | 91 |
| 04.856.0453.0 | 9705A/6/10 B L1 | 19 |
| 04.856.0553.0 | 9705A/6/10 B L2 | 91 |
| 04.856.0653.0 | 9705A/6/10 B L3 | 91 |
| 04.856.0753.0 | 9705A/6/10B PE | 91 |
| 04.856.0853.0 | 9705A/6/10B L1L2L3NPE.. | 91 |
| 04.856.0953.0 | 9705A/6/10B F1 | 91 |
| 04.856.1053.0 | 9705A/6/10B F2 | 91 |
| 04.856.3153.0 | 9705A/6/10B SL | 91 |
| 04.856.3253.0 | 9705A/6/10B N | 91 |
| 04.858.0053.0 | 9705A/8/10B SLZ | 201 |
| 04.858.0153.0 | 9705A/8/10B ERDZ | 201 |
| 04.858.0253.0 | 9705A/8/10B + | 201 |
| 04.858.0353.0 | 9705A/8/10B - | 201 |
| 04.858.0453.0 | 9705A/8/10B L1 | 201 |
| 04.858.0553.0 | 9705A/8/10B L2 | 201 |
| 04.858.0653.0 | 9705A/8/10B L3 | 201 |
| 04.858.0753.0 | 9705A/8/10B PE | 201 |
| 04.858.0853.0 | 9705A/8/10B L1L2L3NPE.. | 201 |
| 04.858.0953.0 | 9705A/8/10B F1 | 201 |
| 04.858.1053.0 | 9705A/8/10B F2 | 201 |
| 04.858.3153.0 | 9705A/8/10B SL | 201 |
| 04.858.3253.0 | 9705A/8/10B N | 201 |
| 05.084.0212.0 | | 390 |
| 05.091.0200.0 | | 47 |
| 05.502.0000.0 | HOCHPOL. | 683 |
| 05.502.0200.0 | AUSDRUECKWERKZEUG | 207 |
| 05.502.0410.0 | MOD.20POL. | 741 |
| 05.502.0500.0 | KLINGE | 207 |
| 05.502.0610.0 | MOD. 4POL. | 741 |
| 05.502.0710.0 | MOD.10POL. | 741 |
| 05.502.0810.0 | MOD. 5POL. | 741 |
| 05.502.0910.0 | MOD. 3POL. | 741 |
| 05.502.1010.0 | MODULLOESEWZ. | 741 |
| 05.502.2000.0 | CRIMPBACKEN A | 741 |
| 05.502.2000.0 | CRIMPBACKEN A | 798 |
| 05.502.2100.0 | CRIMPBACKEN B | 631 |
| 05.502.2100.0 | CRIMPBACKEN B | 798 |
| 05.502.2200.0 | CRIMPBACKEN C | 741 |
| 05.502.2200.0 | CRIMPBACKEN C | 798 |
| 05.502.2300.0 | CRIMPBACKEN D | 739 |
| 05.502.2300.0 | CRIMPBACKEN D | 798 |
| 05.502.2400.0 | CRIMPBACKEN E | 683 |
| 05.502.2400.0 | CRIMPBACKEN E | 798 |
| 05.502.2500.0 | | 291 |
| 05.502.3100.0 | KONT.AUFNAHME 1 | 739 |
| 05.502.3100.0 | KONT.AUFNAHME 1 | 798 |
| 05.502.3200.0 | KONT.AUFNAHME 2 | 683 |
| 05.502.3200.0 | KONT.AUFNAHME 2 | 798 |
| 05.502.3300.0 | KONT.AUFNAHME 3 | 631 |
| 05.502.3300.0 | KONT.AUFNAHME 3 | 798 |
| 05.502.3500.0 | F. 400/690V-SER. | 631 |
| 05.507.4021.0 | M 20 x 1,5 | 779 |
| 05.507.4053.0 | M 20 x 1,5 | 779 |
| 05.507.4121.0 | M 25 x 1,5 | 779 |
| 05.507.4153.0 | M 25 x 1,5 | 779 |
| 05.507.4221.0 | M 32 x 1,5 | 779 |
| 05.507.4253.0 | M 32 x 1,5 | 779 |
| 05.507.4321.0 | M 40 x 1,5 | 779 |
| 05.507.4353.0 | M 40 x 1,5 | 779 |
| 05.507.7621.0 | PG 13,5 - M 20 x 1,5 | 778 |
| 05.507.7721.0 | PG 16 - M 20 x 1,5 | 778 |
| 05.507.7821.0 | PG 21 - M 25 x 1,5 | 778 |
| 05.507.8121.0 | M 20 x 1,5 - PG 13,5 | 779 |
| 05.507.8221.0 | M 20 x 1,5 - PG 16 | 779 |
| 05.507.8321.0 | M 25 x 1,5 - PG 21 | 779 |
| 05.507.8421.0 | M 32 x 1,5 - PG 29 | 779 |
| 05.507.8621.0 | M 16 x 1,5 - M 20 x 1,5 | 778 |
| 05.507.8721.0 | M 20 x 1,5 - M 25 x 1,5 | 778 |
| 05.507.8821.0 | M 25 x 1,5 - M 32 x 1,5 | 778 |
| 05.507.8921.0 | M 32 x 1,5 - M 40 x 1,5 | 778 |
| 05.507.9021.0 | M 20 x 1,5 - M 16 x 1,5 | 778 |
| 05.507.9121.0 | M 25 x 1,5 - M 20 x 1,5 | 778 |
| 05.507.9221.0 | M 32 x 1,5 - M 25 x 1,5 | 778 |
| 05.507.9321.0 | M 40 x 1,5 - M 32 x 1,5 | 778 |
| 05.508.3121.0 | 9011 A | 191 |
| 05.508.3221.0 | 9011 B | 101 |
| 05.508.6521.0 | STECKERBUCHSE | 191 |
| 05.508.8621.0 | SCHRAUBBUCHSE | 197 |
| 05.508.8721.0 | SCHRAUBBUCHSE | 197 |
| 05.508.8821.0 | 9011 C | 176 |
| 05.508.882100 | | 197 |
| 05.508.8921.0 | 9011 D | 176 |
| 05.508.9721.0 | SCHRAUBBUCHSE | 197 |
| 05.509.6021.0 | STECKERBUCHSE | 176 |
| 05.511.2953.0 | | 148 |
| 05.511.2953.7 | | 148 |
| 05.511.2953.8 | | 148 |
| 05.511.2953.9 | | 148 |
| 05.513.4212.0 | SPERRBOLZ.M.FEDRG | 786 |
| 05.516.9510.0 | GLEITMUTTER | 215 |
| 05.522.0725.0 | 1039 W | 263 |
| 05.522.7356.0 | BEF.HALTER | 331 |
| 05.522.7756.0 | BEF.HALTER | 331 |

| Part no. | Type | section / page |
|---|---|---|
| 05.522.7856.0 | BEF.HALTER | 331 |
| 05.523.1610.0 | WINKEL RECHTS | 204 |
| 05.523.1710.0 | WINKEL LINKS | 204 |
| 05.543.7001.0 | | 631 |
| 05.543.7021.0 | FUER 0,5 MM2 | 631 |
| 05.543.7101.0 | | 631 |
| 05.543.7121.0 | FUER 0,75-1 MM2 | 631 |
| 05.543.7201.0 | FUER 1,5 MM2 VERGOLD | 631 |
| 05.543.7221.0 | FUER 1,5 MM2 | 631 |
| 05.543.7301.0 | | 631 |
| 05.543.7321.0 | FUER 2,5 MM2 | 631 |
| 05.543.7401.0 | | 631 |
| 05.543.7421.0 | FUER 4 MM2 | 631 |
| 05.543.9021.0 | FUER 0,5 MM2 KURZ | 655 |
| 05.543.9121.0 | FUER 0,75-1 MM2 | 655 |
| 05.543.9221.0 | FUER 1,5 MM2 KURZ | 655 |
| 05.543.9321.0 | FUER 2,5 MM2 KURZ | 655 |
| 05.543.9421.0 | FUER 4 MM2 | 655 |
| 05.544.0900.0 | 0,2 -0,56 QMM | 683 |
| 05.544.0929.0 | 0,2 -0,56 QMM | 683 |
| 05.544.1000.0 | 0,5 -1,5 QMM | 683 |
| 05.544.1029.0 | 0,5 -1,5 QMM | 683 |
| 05.544.1400.0 | 0,5 -1,5 QNN VERGOLDET | 683 |
| 05.544.1429.0 | 0,5 -1,5 QMM VERGOLDET | 683 |
| 05.544.3129.8 | STECKERKONTAKT | 739 |
| 05.544.3229.8 | STECKERKONTAKT | 740 |
| 05.544.3329.8 | STECKERKONTAKT | 740 |
| 05.544.3429.8 | STECKERKONTAKT | 740 |
| 05.544.3529.8 | STECKERKONTAKT | 740 |
| 05.544.3629.8 | STECKERKONTAKT | 740 |
| 05.544.3729.8 | STECKERKONTAKT | 740 |
| 05.544.3829.8 | STECKERKONTAKT | 740 |
| 05.544.3929.8 | STECKERKONTAKT | 740 |
| 05.544.4029.8 | STECKERKONTAKT | 740 |
| 05.544.4129.8 | STECKERKONTAKT | 740 |
| 05.544.4229.8 | STECKERKONTAKT | 740 |
| 05.544.4329.8 | STECKERKONTAKT | 740 |
| 05.544.4429.8 | STECKERKONTAKT | 740 |
| 05.544.4529.8 | STECKERKONTAKT | 740 |
| 05.544.4629.7 | STECKERKONTAKT | 740 |
| 05.544.4729.7 | STECKERKONTAKT | 740 |
| 05.544.5621.0 | STECKERKONTAKT | 761 |
| 05.549.0500.0 | HALTEFEDER | 128 |
| 05.549.1200.0 | KONTAKTFEDER | 177 |
| 05.555.8521.0 | FLACHSTECKER | 584 |
| 05.555.8621.0 | FLACHSTECKER | 584 |
| 05.555.8721.0 | FLACHSTECKER | 584 |
| 05.555.8821.0 | FLACHSTECKER | 584 |
| 05.555.8921.0 | FLACHSTECKER | 584 |
| 05.555.9121.0 | FLACHSTECKER | 584 |
| 05.561.0053.0 | CODIERAST STIFTL. | 36 |
| 05.561.0053.0 | CODIERAST STIFTL. | 284 |
| 05.561.1389.0 | | 412 |
| 05.561.4125.0 | VERB.-SCHIENE | 134 |
| 05.561.4125.0 | VERB.-SCHIENE | 310 |
| 05.561.6553.0 | LEL 2,5/1 WEISS | 19 |
| 05.561.6553.0 | LEL 2,5/1 WEISS | 308 |
| 05.561.6653.0 | LEL 2,5/2 GRAU | 20 |
| 05.561.6653.0 | LEL 2,5/2 GRAU | 308 |
| 05.561.6753.0 | LEL 2,5/3 SCHWARZ | 19 |
| 05.561.6753.0 | LEL 2,5/3 SCHWARZ | 308 |
| 05.561.8553.0 | LEL 4/1 WEISS | 20 |
| 05.561.8653.0 | LEL 4/2 GRAU | 20 |
| 05.561.8753.0 | LEL 4/3 SCHWARZ | 20 |
| 05.561.9153.0 | CODIERAST BU.LST. | 37 |
| 05.561.9153.0 | CODIERAST BU.LST. | 286 |
| 05.561.9453.0 | CODIERSTIFT-AST | 319 |
| 05.561.9453.5 | CODIERSTIFT-AST | 319 |
| 05.561.9553.0 | WIEBOX CN BL1 | 594 |
| 05.561.9653.0 | WIEBOX CN BL2 | 594 |
| 05.562.1389.0 | | 410 |
| 05.562.2453.0 | LEL 1,5/1 WEISS | 33 |
| 05.562.2453.0 | LEL 1,5/1 WEISS | 309 |
| 05.562.2553.0 | LEL 1,5/2 GRAU | 33 |
| 05.562.2553.0 | LEL 1,5/2 GRAU | 309 |
| 05.562.2653.0 | LEL 1,5/3 SCHWARZ | 33 |
| 05.562.2653.0 | LEL 1,5/3 SCHWARZ | 309 |
| 05.562.3183.0 | GUMMISTOPFEN KL. | 755 |
| 05.562.3283.0 | GUMMISTOPFEN GR. | 755 |
| 05.562.5957.1 | | 389 |
| 05.562.6557.1 | | 389 |
| 05.562.8257.1 | | 389 |
| 05.563.5453.0 | | 148 |
| 05.563.8053.0 | | 124 |
| 05.576.5853.0 | WK 2,5 U /8113 S-VS | 137 |
| 05.576.5853.0 | WK 2,5 U /8113 S-VS | 311 |
| 05.576.8312.0 | | 787 |
| 05.576.8412.0 | | 787 |
| 05.576.8512.0 | | 787 |
| 05.582.8153.0 | SCHNELLMONT.GRIFF | 175 |
| 05.582.8653.0 | F.STCKHUELS.6,3 BIS2,5Q | 175 |
| 05.582.8753.0 | | 175 |
| 05.583.0053.0 | TR.STUECK M. U-F | 584 |
| 05.583.0053.0 | TR.STUECK M. U-F | 675 |
| 05.583.0153.0 | TR.STUECK M. U-F | 586 |

| Part no. | Type | section / page |
|---|---|---|
| 05.584.0053.0 | CODIERSTUECK-AST | 137 |
| 05.584.0053.0 | CODIERSTUECK-AST | 311 |
| 05.584.8853.0 | TR.STUECK M. U-F | 590 |
| 05.584.8953.0 | TR.STUECK M. U-F | 590 |
| 05.584.9489.0 | SELBSTKLEBESCHILD | 183 |
| 05.590.0052.0 | 315 E | 182 |
| 05.590.3121.0 | 1036 R | 263 |
| 05.591.1255.0 | | 410 |
| 05.591.3089.0 | ETIKETTEN A4 | 416 |
| 05.591.3255.0 | RICOS DISK BASE | 410 |
| 05.591.3389.0 | RICOS MANUAL D | 410 |
| 05.592.0621.0 | SPERRBOLZ.M.FEDRG | 786 |
| 05.592.1152.0 | | 256 |
| 05.592.1953.0 | TRENNSTUECK | 215 |
| 05.592.7553.0 | FUER NYAF 1,5 MM2 | 138 |
| 05.592.7653.0 | FUER NYAF 2,5 MM2 | 138 |
| 05.593.4153.0 | SCHNELLMONT.GRIFF | 190 |
| 05.593.5853.0 | SCHNELLMONT.GRIFF | 190 |
| 05.593.5953.0 | SCHNELLMONT.GRIFF | 191 |
| 05.593.7756.0 | SPERRSTUECK | 331 |
| 05.593.8853.0 | BEF.HALTER | 331 |
| 05.594.3653.0 | RASTHEBEL | 331 |
| 05.594.5153.0 | CODIERSTUECK-AST | 219 |
| 05.594.5853.0 | SCHNELLMONT.GRIFF | 175 |
| 05.594.5953.0 | SCHNELLMONT.GRIFF | 175 |
| 05.594.6053.0 | SCHNELLMONT.GRIFF | 175 |
| 05.595.5900.0 | 2A | 128 |
| 05.595.6000.0 | 4A | 128 |
| 05.595.6100.0 | 6A | 128 |
| 05.595.6200.0 | 10A | 128 |
| 05.595.6300.0 | 16A | 128 |
| 05.595.6400.0 | 20A | 128 |
| 05.595.6500.0 | 25A | 128 |
| 05.595.6600.0 | 35A | 128 |
| 05.595.6700.0 | 50A | 128 |
| 05.595.9200.0 | 2A | 128 |
| 05.595.9300.0 | 4A | 128 |
| 05.595.9400.0 | 6A | 128 |
| 05.595.9500.0 | 10A | 128 |
| 05.596.6127.0 | 2,08 GELB | 797 |
| 05.599.2027.0 | AEI 1,5Z-N | 797 |
| 05.599.2853.0 | BEF.HALTER | 331 |
| 05.599.2953.0 | BEF.HALTER | 331 |
| 05.599.8053.0 | CODIERSTUECK-AST | 205 |
| 05.599.8053.0 | CODIERSTUECK-AST | 321 |
| 06.065.0021.0 | AM 5 X 12 D 933SZMS | 156 |
| 06.502.4000.0 | DIN 5264 A 0,6 x 3,5 | 20 |
| 06.502.4000.0 | DIN 5264 A 0,6 x 3,5 | 293 |
| 06.502.4000.0 | DIN 5264 A 0,6 x 3,5 | 799 |
| 06.502.4100.0 | DIN 5264 A 0,8 x 4,0 | 21 |
| 06.502.4200.0 | DIN 5264 A 1,0 x 5,5 | 21 |
| 06.502.4300.0 | DIN 5264 A 0,4 X 2,5 | 281 |
| 06.502.5000.0 | DIN 5264 B 0,6X3,5 M | 30 |
| 06.600.2027.0 | DIN 46228-E 0,5 -8 | 796 |
| 06.600.2127.0 | DIN 46228-E 0,75- 8 | 796 |
| 06.600.2227.0 | DIN 46228-E 1 - 8 | 796 |
| 06.600.2327.0 | DIN 46228-E 1,5 - 8 | 796 |
| 06.600.2427.0 | DIN 46228-E 1,5 -18 | 796 |
| 06.600.2527.0 | DIN 46228-E 2,5 - 8 | 796 |
| 06.600.2627.0 | DIN 46228-E 2,5 -18 | 796 |
| 06.600.2727.0 | DIN 46228-E 4 -10 | 796 |
| 06.600.2827.0 | DIN 46228-E 4 -18 | 796 |
| 06.600.2927.0 | DIN 46228-E 6 -12 | 796 |
| 06.600.3027.0 | DIN 46228-E 6 -18 | 796 |
| 06.600.3127.0 | DIN 46228-E10 -12 | 796 |
| 06.600.3227.0 | DIN 46228-E10 -18 | 796 |
| 06.600.3327.0 | DIN 46228-E16 -12 | 796 |
| 06.600.3427.0 | DIN 46228-E16 -18 | 796 |
| 06.600.3527.0 | DIN 46228-E25 -18 | 796 |
| 06.600.4027.0 | DIN 46228-A 0,5 - 6 | 796 |
| 06.600.4127.0 | DIN 46228-A 0,75- 6 | 796 |
| 06.600.4227.0 | DIN 46228-A 1 - 6 | 796 |
| 06.600.4327.0 | DIN 46228-A 1,5 - 7 | 796 |
| 06.600.4427.0 | DIN 46228-A 2,5 - 7 | 796 |
| 06.600.4527.0 | DIN 46228-A 4 - 9 | 796 |
| 06.600.4627.0 | DIN 46228-A 6 -10 | 796 |
| 06.600.4727.0 | DIN 46228-A10 -12 | 796 |
| 06.600.4827.0 | DIN 46228-A16 -12 | 796 |
| 06.600.4927.0 | DIN 46228-A25 -15 | 796 |
| 06.600.5027.0 | IN 46228-A35 -18 | 796 |
| 07.201.4227.0 | VB RFK 1 185 2 | 157 |
| 07.201.4327.0 | VB RFK 1 185 3 | 157 |
| 07.201.4427.0 | VB RFK 1 185 4 | 157 |
| 07.201.8227.0 | VB RFK 1 240 2 | 159 |
| 07.201.8327.0 | VB RFK 1 240 3 | 159 |
| 07.201.8427.0 | VB RFK 1 240 4 | 159 |
| 07.205.1227.0 | VB RFK 1 / 95 / 2 / 32 | 153 |
| 07.205.1327.0 | VB RFK 1 / 95 / 3 / 32 | 153 |
| 07.205.1427.0 | VB RFK 1 / 95 / 4 / 32 | 153 |
| 07.205.5227.0 | | 154 |
| 07.205.5327.0 | | 154 |
| 07.205.7227.0 | | 154 |
| 07.205.7327.0 | | 154 |
| 07.205.8227.0 | | 155 |
| 07.205.8327.0 | | 155 |

# contents


| Part no. | Type | section / page |
|---|---|---|
| 07.205.9227.0 | | 155 |
| 07.205.9327.0 | | 155 |
| 07.250.0027.0 | | 256 |
| 07.250.0227.0 | VB 11/ 1 / 2 | 258 |
| 07.250.0327.0 | | 258 |
| 07.250.0627.0 | VB 11/ 1 / 6 | 258 |
| 07.250.1027.0 | VB 11 / 1 / 12 | 258 |
| 07.250.1627.0 | VERBINDUNGSKAMM # | 256 |
| 07.250.2527.0 | VB 11/ 2 | 218 |
| 07.250.3027.0 | VERBINDUNGSKAMM | 128 |
| 07.250.3127.0 | VERBINDUNGSKAMM # | 128 |
| 07.253.0027.0 | VB 9786 M | 259 |
| 07.253.0227.0 | VB 9786 2 | 130 |
| 07.253.0327.0 | VB 9786 3 | 130 |
| 07.253.0427.0 | VB 9786 4 | 168 |
| 07.253.0627.0 | VB 9786 6 | 130 |
| 07.255.0027.0 | VB 0,5 WK 4..- M-70 | 168 |
| 07.255.0227.0 | VB 0,5 WK 4..- 2 | 168 |
| 07.255.0327.0 | VB 0,5 WK 4..- 3 | 168 |
| 07.255.0427.0 | VB 0,5 WK 4..- 4 | 168 |
| 07.255.0527.0 | VB 0,5 WK 4..- 5 | 168 |
| 07.255.0627.0 | VB 0,5 WK 4..- 6 | 168 |
| 07.255.0727.0 | VB 0,5 WK 4..- 7 | 168 |
| 07.255.0827.0 | VB 0,5 WK 4..- 8 | 168 |
| 07.255.0927.0 | VB 0,5 WK 4..- 9 | 168 |
| 07.255.1027.0 | VB 0,5 WK 4..-10 | 168 |
| 07.255.1127.0 | VB 0,5 WK 4..-11 | 168 |
| 07.255.1227.0 | VB 0,5 WK 4..-12 | 168 |
| 07.255.2027.0 | VB WK4 E M | 168 |
| 07.255.2227.0 | VB WK4 E - 2 | 168 |
| 07.255.2327.0 | VB WK4 E - 3 | 168 |
| 07.255.2427.0 | VB WK4 E - 4 | 168 |
| 07.255.2527.0 | VB WK4 E - 5 | 168 |
| 07.255.2627.0 | VB WK4 E - 6 | 168 |
| 07.255.2727.0 | VB WK4 E - 7 | 168 |
| 07.255.2827.0 | VB WK4 E - 8 | 168 |
| 07.255.2927.0 | VB WK4 E - 9 | 168 |
| 07.255.3027.0 | VB WK4 E - 10 | 168 |
| 07.255.3127.0 | VB WK 4E - 11 | 168 |
| 07.255.3227.0 | VB WK4 E - 12 | 168 |
| 07.255.4027.0 | VB 1 WK 4..- M-70 | 168 |
| 07.255.4227.0 | VB 1 WK 4..- 2 | 168 |
| 07.255.4327.0 | VB 1 WK 4..- 3 | 168 |
| 07.255.4427.0 | VB 1 WK 4..- 4 | 168 |
| 07.255.4527.0 | VB 1 WK 4..- 5 | 168 |
| 07.255.4627.0 | VB 1 WK 4..- 6 | 168 |
| 07.255.4727.0 | VB 1 WK 4..- 7 | 168 |
| 07.255.4827.0 | VB 1 WK 4..- 8 | 168 |
| 07.255.4927.0 | VB 1 WK 4..- 9 | 168 |
| 07.255.5027.0 | VB 1 WK 4..-10 | 168 |
| 07.255.5127.0 | VB 1 WK 4..-11 | 168 |
| 07.255.5227.0 | VB 1 WK 4..-12 | 168 |
| 07.256.4227.0 | VBS WK4 E - 2 | 168 |
| 07.256.4327.0 | VBS WK4 E - 3 | 168 |
| 07.256.4427.0 | VBS WK4 E - 4 | 168 |
| 07.256.4527.0 | VBS WK4 E - 5 | 168 |
| 07.256.4627.0 | VBS WK4 E - 6 | 168 |
| 07.256.4727.0 | VBS WK4 E - 7 | 168 |
| 07.256.4827.0 | VBS WK4 E - 8 | 168 |
| 07.256.4927.0 | VBS WK4 E - 9 | 168 |
| 07.256.5027.0 | VBS WK4 E - 10 | 168 |
| 07.256.5127.0 | VBS WK4 E - 11 | 168 |
| 07.256.5227.0 | VBS WK4 E - 12 | 168 |
| 07.256.8027.0 | VB 16 E / M | 259 |
| 07.256.8227.0 | VB 16 E / 2 POLIG | 259 |
| 07.257.0227.0 | VB WK2,5 KO - 2 | 120 |
| 07.257.0327.0 | VB WK2,5 KO - 3 | 120 |
| 07.257.2027.0 | VB WK2,5 KO - 20 | 120 |
| 07.300.2753.0 | ZWISCHENPLATTE | 374 |
| 07.300.4753.0 | AP 8185 TOP N | 349 |
| 07.310.3153.0 | 9701 / 6 | 190 |
| 07.310.3153.6 | 9701 / 6 BLAU | 190 |
| 07.310.3253.0 | 9701 / 8 | 191 |
| 07.310.3253.6 | 9701 / 8 BLAU | 191 |
| 07.310.3353.0 | 9701 / 12 | 191 |
| 07.310.3353.6 | 9701 / 12 BLAU | 191 |
| 07.310.3453.0 | 9702 / 6 | 190 |
| 07.310.3453.6 | 9702 / 6 BLAU | 190 |
| 07.310.3553.0 | 9702 / 8 | 191 |
| 07.310.3553.6 | 9702 / 8 BLAU | 191 |
| 07.310.3653.0 | 9702 / 12 | 191 |
| 07.310.3653.6 | 9702 / 12 BLAU | 191 |
| 07.310.3953.0 | 9701 / 10 | 191 |
| 07.310.3953.6 | 9701 / 10 BLAU | 191 |
| 07.310.4053.0 | 9702 / 10 | 191 |
| 07.310.4053.6 | 9702 / 10 BLAU | 191 |
| 07.310.4553.0 | 9701 / 6 ETK L | 193 |
| 07.310.5253.0 | 9701 B / 8 ETK | 193 |
| 07.310.5353.0 | 9701 B / 10 ETK | 193 |
| 07.310.5855.0 | 9701 A/6 1S KO TP 2/V0 | 141 |
| 07.310.8453.0 | ABSCHLUSSPLATTE | 584 |
| 07.310.8553.0 | ABSCHLUSSPLATTE | 584 |
| 07.310.9355.0 | AP 2,5-4 KO/V0 | 120 |
| 07.310.9455.0 | TW 2,5-4 KO/V0 | 120 |
| 07.310.9653.0 | ABSCHLUSSPLATTE | 591 |

| Part no. | Type | section / page |
|---|---|---|
| 07.310.9853.0 | AP 8113 SE | 303 |
| 07.311.0155.0 | AP 2,5 - 4 /V0 | 78 |
| 07.311.0155.6 | AP 2,5 - 4 BL/V0 | 78 |
| 07.311.0255.0 | AP 6 /V0 | 103 |
| 07.311.0255.6 | AP 6 BL/V0 | 103 |
| 07.311.0653.0 | APM 2,5 F. / 15 | 144 |
| 07.311.0753.0 | APM 4 SL / 15 | 145 |
| 07.311.0853.0 | APM 2,5 - 4 / 15 | 145 |
| 07.311.0853.6 | APM 2,5 - 4 / 15 BLAU | 145 |
| 07.311.1155.0 | TW 2,5 - 4 /V0 | 78 |
| 07.311.1155.6 | TW 2,5 - 4 BL/V0 | 78 |
| 07.311.1255.0 | TW 6 /V0 | 103 |
| 07.311.1255.6 | TW 6 BL/V0 | 103 |
| 07.311.1853.0 | TWM 2,5 - 4 /15 | 145 |
| 07.311.1853.6 | TW 2,5 - 4 /15 BLAU | 145 |
| 07.311.2053.0 | | 310 |
| 07.311.2053.8 | TS 2,5 GELB | 101 |
| 07.311.2053.8 | TS 2,5 GELB | 312 |
| 07.311.2153.8 | TS 4 GELB | 78 |
| 07.311.2253.8 | TS 6 GELB | 103 |
| 07.311.2353.8 | TS 10 GELB | 78 |
| 07.311.2453.8 | TS 16 GELB | 69 |
| 07.311.2853.8 | TSM 2,5 / 15 GELB | 144 |
| 07.311.2953.8 | TS 4 / 15 GELB | 112 |
| 07.311.3855.0 | AP 4 3S 1K / V0 | 138 |
| 07.311.4055.0 | AP 4 E /V0 | 114 |
| 07.311.4155.0 | AP 10/SI /V0 | 125 |
| 07.311.4255.0 | AP 4 S/V0 | 141 |
| 07.311.4355.0 | AP 4 S / IW/V0 | 141 |
| 07.311.4455.0 | AP 3 S/V0 | 140 |
| 07.311.4555.0 | AP 3 S / IW/V0 | 140 |
| 07.311.4655.0 | AP 5 S/V0 | 139 |
| 07.311.5055.0 | TW 4 E /V0 | 114 |
| 07.311.6155.0 | AP 4 TK /V0 | 122 |
| 07.311.6155.6 | AP 4 TK BL /V0 | 123 |
| 07.311.6355.0 | AP 4/D /V0 | 112 |
| 07.311.6355.6 | AP 4/D BL /V0 | 112 |
| 07.311.6455.0 | AP4 /D1 /2 /V0 | 112 |
| 07.311.6455.6 | | 112 |
| 07.311.6555.0 | API 4/2/V0 | 69 |
| 07.311.6655.0 | APN 10 /V0 | 103 |
| 07.311.6655.6 | APN 10 BL/V0 | 103 |
| 07.311.6755.0 | APN 16 /V0 | 104 |
| 07.311.6755.6 | APN 16 BL/V0 | 104 |
| 07.311.6855.0 | API 4/3/V0 | 74 |
| 07.311.6955.0 | TWI 4/V0 | 72 |
| 07.311.7655.0 | TWN 10 /V0 | 103 |
| 07.311.7655.6 | TWN 10 BL/V0 | 103 |
| 07.311.7755.0 | TWN 16 /V0 | 104 |
| 07.311.7755.6 | TWN 16 BL/V0 | 104 |
| 07.311.7855.0 | TWN 35 /V0 | 105 |
| 07.311.7855.6 | TWN 35 BL /V0 | 105 |
| 07.311.7955.0 | TWN 70 /V0 | 105 |
| 07.311.7955.6 | TWN 70 BL /V0 | 105 |
| 07.311.8155.0 | TW 4 TK... /V0 | 122 |
| 07.311.8353.0 | APIF 2,5 | 58 |
| 07.311.8453.8 | TSN16 GELB | 104 |
| 07.311.8553.8 | TSN AD 16 GELB | 104 |
| 07.311.8653.8 | TSI 35 GELB | 79 |
| 07.311.8855.0 | API 35/V0 | 79 |
| 07.311.8855.6 | API 35 BLAU/V0 | 79 |
| 07.311.9055.0 | AP 2,5 U/D/8113 S/V/V0 | 134 |
| 07.311.9055.0 | AP 2,5 U/D/8113 S/V/V0 | 312 |
| 07.311.9055.6 | AP2,5U/D/8113 S/V BL/V0 | 313 |
| 07.311.9155.0 | ZP 2,5 U/D/8113 S/V/V0 | 134 |
| 07.311.9155.0 | ZP 2,5 U/D/8113 S/V/V0 | 312 |
| 07.311.9155.6 | ZP2,5U/D/8113 S/V BL/V0 | 313 |
| 07.311.9455.0 | API 10 - 16/V0 | 78 |
| 07.311.9455.6 | API 10 - 16 BLAU/V0 | 78 |
| 07.311.9555.0 | API 10 - 16 SL/V0 | 82 |
| 07.311.9853.0 | | 137 |
| 07.311.9855.0 | AP 2,5U/8113S/H/V0 | 311 |
| 07.312.0053.0 | 9701 / 6 SL | 194 |
| 07.312.0153.0 | 9701 / 8 SL | 194 |
| 07.312.0253.0 | 9701 / 10 SL | 195 |
| 07.312.0353.0 | 9701 / 16 SL | 189 |
| 07.312.0555.0 | TW 2,5-4 K/U /V0 | 118 |
| 07.312.0855.0 | APN 16ETK /V0 | 107 |
| 07.312.0955.0 | APN 10ETK /V0 | 106 |
| 07.312.1155.0 | APN 4ETK /V0 | 106 |
| 07.312.1255.0 | TW 2,5-3 D/U /V0 | 118 |
| 07.312.1555.0 | AP 2,5 U/8113 S/V /V0 | 136 |
| 07.312.1555.0 | AP 2,5 U/8113 S/V /V0 | 310 |
| 07.312.1555.6 | AP 2,5 U/8113 S/V BL/V0 | 137 |
| 07.312.1655.0 | ZP 2,5 U/8113 S/V/V0 | 136 |
| 07.312.1655.0 | ZP 2,5 U/8113 S/V/V0 | 310 |
| 07.312.1655.6 | ZP 2,5 U/8113 S/V BL/V0 | 137 |
| 07.312.1655.6 | ZP 2,5 U/8113 S/V BL/V0 | 311 |
| 07.312.1755.0 | APN2,5E | 116 |
| 07.312.1855.0 | TWN2,5E | 116 |
| 07.312.1955.0 | API 10-16 ETK/1/V0 | 80 |
| 07.312.2153.0 | APF 2,5 - 4 | 20 |
| 07.312.2153.6 | APF 2,5 - 4 BLAU | 20 |
| 07.312.2153.7 | APF 2,5 - 4 GRUEN | 22 |
| 07.312.2253.0 | TWF 2,5 - 4 | 19 |

| Part no. | Type | section / page |
|---|---|---|
| 07.312.2253.6 | TWF 2,5 - 4 BLAU | 20 |
| 07.312.2353.0 | APF 2,5/D 1/2 | 26 |
| 07.312.2353.6 | APF 2,5/D 1/2 BLAU | 26 |
| 07.312.2353.7 | APF 2,5/D 1/2 GRUEN | 28 |
| 07.312.2453.0 | TWF 2,5/D 1/2 | 26 |
| 07.312.2453.6 | TWF 2,5/D 1/2 BLAU | 26 |
| 07.312.2553.0 | APF 2,5/D 2/2 | 26 |
| 07.312.2553.6 | APF 2,5/D 2/2 BLAU | 26 |
| 07.312.2553.7 | APF 2,5/D 2/2 GRUEN | 28 |
| 07.312.2653.0 | TWF 2,5/D 2/2 | 26 |
| 07.312.2653.6 | TWF 2,5/D 2/2 BLAU | 26 |
| 07.312.2853.0 | APF 4 TK | 38 |
| 07.312.3553.0 | APF 1,5 E | 33 |
| 07.312.3653.0 | TWF 1,5 E | 33 |
| 07.312.4153.0 | APF 2,5/D2 /8113 | 36 |
| 07.312.4153.0 | APF 2,5/D2 /8113 | 308 |
| 07.312.4153.6 | APF 2,5/d2/8113 BLAU | 36 |
| 07.312.4153.6 | APF 2,5/d2/8113 BLAU | 308 |
| 07.312.4353.0 | APF 4 TK. | 39 |
| 07.312.4655.0 | AP 2,5U/8113../V0 | 136 |
| 07.312.4655.0 | AP 2,5U/8113../V0 | 310 |
| 07.312.4753.0 | WKF 1,5E/8113/35 | 37 |
| 07.312.4753.0 | WKF 1,5E/8113/35 | 309 |
| 07.312.4853.0 | APF4/D1/2 | 27 |
| 07.312.4853.6 | APF4/D1/2 BLAU | 27 |
| 07.312.4853.7 | APF4/D1/2 GRUEN | 29 |
| 07.312.4953.0 | TWF 4/D1/2 | 27 |
| 07.312.4953.6 | TWF 4/D1/2 BLAU | 27 |
| 07.312.5053.0 | AP 1 - 2,5 | 232 |
| 07.312.5053.6 | AP 1 - 2,5 BLAU | 232 |
| 07.312.5053.7 | AP 1 - 2,5 GRUEN | 233 |
| 07.312.5153.0 | TW 1 - 2,5 | 232 |
| 07.312.5153.6 | TW 1 - 2,5 | 232 |
| 07.312.5253.0 | APC 1-2,5 D./TK. | 234 |
| 07.312.5253.6 | APC 1-2,5 D./TK. BLAU | 234 |
| 07.312.5253.7 | APC 1-2,5 D./TK.GRUEN | 235 |
| 07.312.5353.0 | TWC 1 - 2,5 D1. | 234 |
| 07.312.5353.6 | TWC 1 - 2,5 D1. BLAU | 234 |
| 07.312.5453.0 | APC 1-2,5 D2./E. | 231 |
| 07.312.5453.6 | APC 1-2,5 D 2./E. BLAU | 236 |
| 07.312.5453.7 | APC 1-2,5 D 2./E. GRUEN | 237 |
| 07.312.5553.0 | TWC 1 - 2,5 D2./ E | 231 |
| 07.312.5553.6 | TWC 1 - 2,5 D2./ E BLAU | 236 |
| 07.312.5653.0 | APF 4 NT | 24 |
| 07.312.5753.0 | APF 4 E | 30 |
| 07.312.5753.7 | APF 4 E GRUEN | 31 |
| 07.312.5853.0 | TWF 4 E | 30 |
| 07.312.5953.0 | | 40 |
| 07.312.6053.0 | | 177 |
| 07.340.0353.0 | TE / RFK 1 / 95 PA/V0 | 156 |
| 07.340.1053.0 | TE/RFK 1/150-240 PA/V0 | 157 |
| 07.340.1153.0 | TRENNWAND M.BEZ. | 152 |
| 07.340.1353.0 | TRENNWAND M.BEZ. | 152 |
| 07.340.2153.0 | BEZ.PLATTE | 152 |
| 07.340.2353.0 | BEZ.PLATTE | 152 |
| 07.340.3553.0 | | 154 |
| 07.340.3653.0 | | 154 |
| 07.340.3753.0 | | 155 |
| 07.340.4153.0 | ABSCHLUSSPL.M.BEZ | 152 |
| 07.340.4353.0 | ABSCHLUSSPL.M.BEZ | 152 |
| 07.409.7056.0 | DECKEL | 780 |
| 07.409.7156.0 | DECKEL | 780 |
| 07.409.7256.0 | DECKEL | 780 |
| 07.409.7356.0 | DECKEL | 780 |
| 07.413.3653.0 | LOCHSTREIFEN | 331 |
| 07.416.4553.0 | WIEBOX CN 19 EP | 594 |
| 07.416.4653.0 | WIEBOX CN 22 EP | 594 |
| 07.416.4753.0 | WIEBOX CN 26 EP | 595 |
| 07.416.4853.0 | WIEBOX CN 19 FK | 594 |
| 07.416.4856.0 | WIEBOX CN 19 FKG | 594 |
| 07.416.4953.0 | WIEBOX CN 22 FK | 594 |
| 07.416.4956.0 | WIEBOX CN 22 FKG | 594 |
| 07.416.5053.0 | WIEBOX CN 26 FK | 595 |
| 07.416.5056.0 | WIEBOX CN 26 FKG | 595 |
| 07.416.5153.0 | WIEBOX CN DK | 594 |
| 07.416.5253.0 | WIEBOX CN DU | 594 |
| 07.416.5353.0 | WIEBOX CN 19 DK | 594 |
| 07.416.5453.0 | WIEBOX CN 19 DU | 594 |
| 07.416.5653.0 | WIEBOX CN 22 DK | 594 |
| 07.416.5753.0 | WIEBOX CN 22 DU | 594 |
| 07.416.5853.0 | WIEBOX CN 26 DK | 595 |
| 07.416.5953.0 | WIEBOX CN 26 DU | 595 |
| 07.416.6353.0 | REDUZIERPL. 24/6 | 784 |
| 07.416.6453.0 | REDUZIERPL. 24/10 | 784 |
| 07.416.6553.0 | REDUZIERPL. 24/16 | 784 |
| 07.416.6853.0 | ABDECKPLATTE 6 | 784 |
| 07.416.6953.0 | ABDECKPLATTE 10 | 784 |
| 07.416.7053.0 | ABDECKPLATTE 16 | 784 |
| 07.416.7153.0 | ABDECKPLATTE 24 | 784 |
| 07.417.6729.0 | DECKEL | 713 |
| 07.417.6753.0 | DECKEL | 713 |
| 07.417.6829.0 | DECKEL M.DICHTUNG | 713 |
| 07.417.6853.0 | | 713 |
| 07.450.0187.0 | | 267 |
| 07.450.2487.0 | | 267 |

# contents of part number

# contents PART NUMBER


| Part no. | Type | section / page |
|---|---|---|
| 07.451.0180.0 | | 267 |
| 07.451.2480.0 | BZ KL 17 / 24 | 267 |
| 07.470.1380.0 | UNTERLEGPLATTE | 258 |
| 07.470.2256.0 | LEITERHALTER | 258 |
| 07.470.3256.0 | LEITERHALTER | 258 |
| 07.471.1380.0 | UNTERLEGPLATTE | 259 |
| 07.472.1380.0 | UNTERLEGPLATTE | 259 |
| 07.473.1380.0 | UNTERLEGPLATTE | 259 |
| 08.000.0106.0 | X L= 1000 MIT SCHIRM | 569 |
| 08.000.0106.1 | X L= 1500 MIT SCHIRM | 569 |
| 08.000.0106.2 | X L= 2000 MIT SCHIRM | 569 |
| 08.000.0106.3 | X L= 2500 MIT SCHIRM | 569 |
| 08.000.0106.4 | X L= 3000 MIT SCHIRM | 569 |
| 08.000.0106.5 | X L= 3500 MIT SCHIRM | 569 |
| 08.000.0106.6 | X L= 4000 MIT SCHIRM | 569 |
| 08.000.0106.7 | X L= 4500 MIT SCHIRM | 569 |
| 08.000.0106.8 | X L= 5000 MIT SCHIRM | 569 |
| 08.000.0106.9 | X L= 6000 MIT SCHIRM | 569 |
| 08.000.0107.0 | X L= 7000 MIT SCHIRM | 569 |
| 08.000.0107.1 | X L= 8000 MIT SCHIRM | 569 |
| 08.000.0107.2 | X L= 9000 MIT SCHIRM | 569 |
| 08.000.0107.3 | X L=10000 MIT SCHIRM | 569 |
| 08.000.0107.4 | X L= 1000 OHNE SCHIRM | 569 |
| 08.000.0107.5 | X L= 1500 OHNE SCHIRM | 569 |
| 08.000.0107.6 | X L= 2000 OHNE SCHIRM | 569 |
| 08.000.0107.7 | X L= 2500 OHNE SCHIRM | 569 |
| 08.000.0107.8 | X L= 3000 OHNE SCHIRM | 569 |
| 08.000.0108.0 | X L= 4000 OHNE SCHIRM | 569 |
| 08.000.0108.1 | X L= 4500 OHNE SCHIRM | 569 |
| 08.000.0108.2 | X L= 5000 OHNE SCHIRM | 569 |
| 08.000.0108.3 | X L= 6000 OHNE SCHIRM | 569 |
| 08.000.0108.4 | X L= 7000 OHNE SCHIRM | 569 |
| 08.000.0108.5 | X L= 8000 OHNE SCHIRM | 569 |
| 08.000.0108.6 | X L= 9000 OHNE SCHIRM | 569 |
| 08.000.0108.7 | X L=10000 OHNE SCHIRM | 569 |
| 08.000.0108.9 | Y BANDBREITE BIS 8M | 569 |
| 14.100.0170.0 | 547 | 261 |
| 14.100.0270.0 | 548 | 261 |
| 14.100.0370.0 | 549 | 261 |
| 14.200.0270.0 | 1032 | 262 |
| 14.200.0370.0 | 1033 | 262 |
| 14.200.0470.0 | 1033 A | 262 |
| 14.200.1270.0 | 1032 M 3.5 | 262 |
| 14.200.1370.0 | 1033 M 3.5 | 262 |
| 14.200.1470.0 | 1033 A M 3.5 | 262 |
| 14.201.0270.0 | 1032 DS | 262 |
| 14.201.0370.0 | 1033 DS | 262 |
| 14.201.0470.0 | 1033 A DS | 262 |
| 14.210.0270.0 | 2 DIN 46284 ST | 262 |
| 14.210.0370.0 | 3 DIN 46284 ST | 262 |
| 14.211.0270.0 | 2 D DIN 46284 ST | 262 |
| 14.211.0370.0 | 3 D DIN 46284 ST | 262 |
| 14.220.0270.0 | 1031 | 262 |
| 14.220.0370.0 | 1029 | 262 |
| 14.230.0270.0 | 1027 | 262 |
| 14.290.0440.0 | 1033 AP KR | 262 |
| 14.291.0440.0 | 1033 AP DS KR | 262 |
| 15.000.0253.0 | 8105 B / 2 C0 OB | 382 |
| 15.000.0353.0 | 8105 B / 3 C0 OB | 382 |
| 15.000.0453.0 | 8105 B / 4 C0 OB | 382 |
| 15.000.0553.0 | 8105 B / 5 C0 OB | 382 |
| 15.000.0653.0 | 8105 B / 6 C0 OB | 382 |
| 15.000.0753.0 | 8105 B / 7 C0 OB | 382 |
| 15.001.0253.0 | 8105 B / 2 C1 OB | 382 |
| 15.001.0353.0 | 8105 B / 3 C1 OB | 382 |
| 15.001.0453.0 | 8105 B / 4 C1 OB | 382 |
| 15.001.0553.0 | 8105 B / 5 C1 OB | 382 |
| 15.001.0653.0 | 8105 B / 6 C0 OB | 382 |
| 15.001.0753.0 | 8105 B / 7 C1 OB | 382 |
| 15.002.0253.0 | 8105 B / 2 C2 OB | 382 |
| 15.002.0353.0 | 8105 B / 3 C2 OB | 382 |
| 15.002.0453.0 | 8105 B / 4 C2 OB | 382 |
| 15.002.0553.0 | 8105 B / 5 C2 OB | 382 |
| 15.002.0653.0 | 8105 B / 6 C2 OB GR | 382 |
| 15.002.0753.0 | 8105 B / 7 C2 OB | 382 |
| 15.003.0253.0 | 8105 B / 2 C3 OB | 382 |
| 15.003.0353.0 | 8105 B / 3 C3 OB | 382 |
| 15.003.0453.0 | 8105 B / 4 C3 OB | 382 |
| 15.004.0253.0 | 8105 B / 2 C4 OB | 382 |
| 15.004.0353.0 | 8105 B / 3 C4 OB | 382 |
| 15.004.0453.0 | 8105 B / 4 C4 OB | 382 |
| 15.005.0253.0 | 8105 B / 2 C5 OB | 382 |
| 15.005.0353.0 | 8105 B / 3 C5 OB | 382 |
| 15.005.0453.0 | 8105 B / 4 C5 OB | 382 |
| 15.006.0253.0 | 8105 B / 2 C6 OB | 382 |
| 15.006.0353.0 | 8105 B / 3 C6 OB GR | 382 |
| 15.006.0453.0 | 8105 B / 4 C6 OB | 382 |
| 15.007.0253.0 | 8105 B / 2 C7 OB | 382 |
| 15.007.0353.0 | 8105 B / 3 C7 OB | 382 |
| 15.010.0253.0 | 8105 B / 2 C0 VL OB | 383 |
| 15.010.0353.0 | 8105 B / 3 C0 VL OB | 383 |
| 15.010.0453.0 | 8105 B / 4 C0 VL OB | 383 |
| 15.010.0553.0 | 8105 B / 5 C0 VL OB | 383 |
| 15.010.0653.0 | 8105 B / 6 C0 VL OB | 383 |
| 15.010.0753.0 | 8105 B / 7 C0 VL OB | 383 |
| 15.011.0253.0 | 8105 B / 2 C1 VL OB GR | 383 |
| 15.011.0353.0 | 8105 B / 3 C1 VL OB | 383 |
| 15.011.0453.0 | 8105 B / 4 C1 VL OB | 383 |
| 15.011.0553.0 | 8105 B / 5 C1 VL OB | 383 |
| 15.011.0653.0 | 8105 B / 6 C1 VL OB | 383 |
| 15.011.0753.0 | 8105 B / 7 C1 VL OB | 383 |
| 15.012.0253.0 | 8105 B / 2 C2 VL OB GR | 383 |
| 15.012.0353.0 | 8105 B / 3 C2 VL OB GR | 383 |
| 15.012.0453.0 | 8105 B / 4 C2 VL OB | 383 |
| 15.012.0553.0 | 8105 B / 5 C2 VL OB | 383 |
| 15.012.0653.0 | 8105 B / 6 C2 VL OB | 383 |
| 15.012.0753.0 | 8105 B / 7 C2 VL OB | 383 |
| 15.013.0253.0 | 8105 B / 2 C3 VL OB | 383 |
| 15.013.0353.0 | 8105 B / 3 C3 VL OB | 383 |
| 15.013.0453.0 | 8105 B / 4 C3 VL OB | 383 |
| 15.014.0253.0 | 8105 B / 2 C4 VL OB | 383 |
| 15.014.0353.0 | 8105 B / 3 C4 VL OB | 383 |
| 15.014.0453.0 | 8105 B / 4 C4 VL OB | 383 |
| 15.015.0253.0 | 8105 B / 2 C5 VL OB | 383 |
| 15.015.0353.0 | 8105 B / 3 C5 VL OB | 383 |
| 15.015.0453.0 | 8105 B / 4 C5 VL OB | 383 |
| 15.016.0253.0 | 8105 B / 2 C6 OB | 383 |
| 15.016.0353.0 | 8105 B / 3 C6 OB | 383 |
| 15.016.0453.0 | 8105 B / 4 C6 VL OB | 383 |
| 15.017.0253.0 | 8105 B / 2 C7 VL OB | 383 |
| 15.017.0353.0 | 8105 B / 3 C7 VL OB | 383 |
| 15.020.0253.0 | 8105 B / 2 C0 VR OB | 382 |
| 15.020.0353.0 | 8105 B / 3 C0 VR OB | 382 |
| 15.020.0453.0 | 8105 B / 4 C0 VR OB | 382 |
| 15.020.0553.0 | 8105 B / 5 C0 VR OB | 382 |
| 15.020.0653.0 | 8105 B / 6 C0 VR OB | 382 |
| 15.020.0753.0 | 8105 B / 7 C0 VR OB | 382 |
| 15.021.0253.0 | 8105 B / 2 C1 VR OB | 382 |
| 15.021.0353.0 | 8105 B / 3 C1 VR OB | 382 |
| 15.021.0453.0 | 8105 B / 4 C1 VR OB GR | 382 |
| 15.021.0553.0 | 8105 B / 5 C1 VR OB | 382 |
| 15.021.0653.0 | 8105 B / 6 C1 VR OB | 382 |
| 15.021.0753.0 | 8105 B / 7 C1 VR OB | 382 |
| 15.022.0253.0 | 8105 B / 2 C2 VR OB GR | 382 |
| 15.022.0353.0 | 8105 B / 3 C2 VR OB GR | 382 |
| 15.022.0453.0 | 8105 B / 4 C2 VR OB | 382 |
| 15.022.0553.0 | 8105 B / 5 C2 VR OB | 382 |
| 15.022.0653.0 | 8105 B / 6 C2 VR OB | 382 |
| 15.022.0753.0 | 8105 B / 7 C2 VR OB | 382 |
| 15.023.0253.0 | 8105 B / 2 C3 VR OB | 382 |
| 15.023.0353.0 | 8105 B / 3 C3 VR OB GR | 382 |
| 15.023.0453.0 | 8105 B / 4 C3 VR OB | 382 |
| 15.024.0253.0 | 8105 B / 2 C4 VR OB GR | 382 |
| 15.024.0353.0 | 8105 B / 3 C4 VR OB GR | 382 |
| 15.024.0453.0 | 8105 B / 4 C4 VR OB GR | 382 |
| 15.025.0253.0 | 8105 / B 2 C5 VR OB | 382 |
| 15.025.0353.0 | 8105 B / 3 C5 VR OB GR | 382 |
| 15.025.0453.0 | 8105 B / 4 C5 VR OB GR | 382 |
| 15.026.0253.0 | 8105 B / 2 C6 VR OB | 382 |
| 15.026.0353.0 | 8105 B / 3 C6 VR OB | 382 |
| 15.026.0453.0 | 8105 B / 4 C6 VR OB | 382 |
| 15.027.0253.0 | 8105 B / 2 C7 VR OB GR | 382 |
| 15.027.0353.0 | 8105 B / 3 C7 VR OB | 382 |
| 15.301.0258.9 | 8105 F / 2 G C1 OB NT | 383 |
| 15.301.0358.9 | 8105 F / 3 G C1 OB NT | 383 |
| 15.301.0458.9 | 8105 F / 4 G C1 OB NT | 383 |
| 15.301.0558.9 | 8105 F / 5 G C1 OB NT | 383 |
| 15.301.0658.9 | 8105 F / 6 G C1 OB NT | 383 |
| 15.301.0758.9 | 8105 F / 7 G C1 OB NT | 383 |
| 15.302.0258.9 | 8105 F / 2 G C2 OB NT | 383 |
| 15.302.0358.9 | 8105 F / 3 G C2 OB NT | 383 |
| 15.302.0458.9 | 8105 F / 4 G C2 OB NT | 383 |
| 15.302.0558.9 | 8105 F / 5 G C2 OB NT | 383 |
| 15.302.0658.9 | 8105 F / 6 G C2 OB NT | 383 |
| 15.302.0758.9 | 8105 F / 7 G C2 OB NT | 383 |
| 15.303.0258.9 | 8105 F / 2 G C3 OB NT | 383 |
| 15.303.0358.9 | 8105 F / 3 G C3 OB NT | 383 |
| 15.303.0458.9 | 8105 F / 4 G C3 OB NT | 383 |
| 15.304.0258.9 | 8105 F / 2 G C4 OB NT | 383 |
| 15.304.0358.9 | 8105 F / 3 G C4 OB NT | 383 |
| 15.304.0458.9 | 8105 F / 4 G C4 OB NT | 383 |
| 15.305.0258.9 | 8105 F / 2 G C5 OB NT | 383 |
| 15.305.0358.9 | 8105 F / 3 G C5 OB NT | 383 |
| 15.305.0458.9 | 8105 F / 4 G C5 OB NT | 383 |
| 15.306.0258.9 | 8105 F / 2 G C6 OB NT | 383 |
| 15.306.0358.9 | 8105 F / 3 G C6 OB NT | 383 |
| 15.306.0458.9 | 8105 F / 4 G C6 OB NT | 383 |
| 15.307.0258.9 | 8105 F / 2 G C7 OB NT | 383 |
| 15.307.0358.9 | 8105 F / 3 G C7 OB NT | 383 |
| 15.311.0258.9 | 8105 F / 2 W C1 OB NT | 383 |
| 15.311.0358.9 | 8105 F / 3 W C1 OB NT | 383 |
| 15.311.0458.9 | 8105 F / 4 W C1 OB NT | 383 |
| 15.311.0558.9 | 8105 F / 5 W C1 OB NT | 383 |
| 15.311.0658.9 | 8105 F / 6 W C1 OB NT | 383 |
| 15.311.0758.9 | 8105 F / 7 W C1 OB NT | 383 |
| 15.312.0258.9 | 8105 F / 2 W C2 OB NT | 383 |
| 15.312.0358.9 | 8105 F / 3 W C2 OB NT | 383 |
| 15.312.0458.9 | 8105 F / 4 W C2 OB NT | 383 |
| 15.312.0558.9 | 8105 F / 5 W C2 OB NT | 383 |
| 15.312.0658.9 | 8105 F / 6 W C2 OB NT | 383 |
| 15.312.0758.9 | 8105 F / 7 W C2 OB NT | 383 |
| 15.313.0258.9 | 8105 F / 2 W C3 OB NT | 383 |
| 15.313.0358.9 | 8105 F / 3 W C3 OB NT | 383 |
| 15.313.0458.9 | 8105 F / 4 W C3 OB NT | 383 |
| 15.314.0258.9 | 8105 F / 2 W C4 OB NT | 383 |
| 15.314.0358.9 | 8105 F / 3 W C4 OB NT | 383 |
| 15.314.0458.9 | 8105 F / 4 W C4 OB NT | 383 |
| 15.315.0258.9 | 8105 F / 2 W C5 OB NT | 383 |
| 15.315.0358.9 | 8105 F / 3 W C5 OB NT | 383 |
| 15.315.0458.9 | 8105 F / 4 W C5 OB NT | 383 |
| 15.316.0258.9 | 8105 F / 2 W C6 OB NT | 383 |
| 15.316.0358.9 | 8105 F / 3 W C6 OB NT | 383 |
| 15.316.0458.9 | 8105 F / 4 W C6 OB NT | 383 |
| 15.317.0258.9 | 8105 F / Z W C7 OB NT | 383 |
| 15.317.0358.9 | 8105 F / 3 W C7 OB NT | 383 |
| 15.800.8856.0 | | 391 |
| 15.800.9956.0 | | 389 |
| 19.230.0040.0 | KS0 11 / 1 Z KR | 216 |
| 21.304.0153.0 | 4E / 1 | 257 |
| 21.304.0253.0 | 4E / 2 | 257 |
| 21.304.0353.0 | 4E / 3 | 257 |
| 21.304.0453.0 | 4E / 4 | 257 |
| 21.304.0553.0 | 4E / 5 | 257 |
| 21.304.0653.0 | 4E / 6 | 257 |
| 21.304.0753.0 | 4E / 7 | 257 |
| 21.304.0853.0 | 4E / 8 | 257 |
| 21.304.0953.0 | 4E / 9 | 257 |
| 21.304.1053.0 | 4E / 10 | 257 |
| 21.304.1153.0 | 4E / 11 | 257 |
| 21.304.1253.0 | 4E | 257 |
| 21.305.0153.0 | 4E / 1 DS | 257 |
| 21.305.0253.0 | 4E / 2 DS | 257 |
| 21.305.0353.0 | 4E / 3 DS | 257 |
| 21.305.0453.0 | 4E / 4 DS | 257 |
| 21.305.0553.0 | 4E / 5 DS | 257 |
| 21.305.0653.0 | 4E / 6 DS | 257 |
| 21.305.0753.0 | 4E / 7 DS | 257 |
| 21.305.0853.0 | 4E / 8 DS | 257 |
| 21.305.0953.0 | 4E / 9 DS | 257 |
| 21.305.1053.0 | 4E / 10 DS | 257 |
| 21.305.1153.0 | 4E / 11 DS | 257 |
| 21.305.1253.0 | 4E DS | 257 |
| 21.310.0153.0 | 6E / 1 | 258 |
| 21.310.0253.0 | 6E / 2 | 258 |
| 21.310.0353.0 | 6E / 3 | 258 |
| 21.310.0453.0 | 6E / 4 | 258 |
| 21.310.0553.0 | MMLEISTE6E / 5 | 258 |
| 21.310.0653.0 | 6E / 6 | 258 |
| 21.310.0753.0 | 6E / 7 | 258 |
| 21.310.0853.0 | 6E / 8 | 258 |
| 21.310.0953.0 | 6E / 9 | 258 |
| 21.310.1053.0 | 6E / 10 | 258 |
| 21.310.1253.0 | 6E | 258 |
| 21.311.0153.0 | 6E / 1 DS | 258 |
| 21.311.0253.0 | 6E / 2 DS | 258 |
| 21.311.0353.0 | 6E / 3 DS | 258 |
| 21.311.0453.0 | 6E / 4 DS | 258 |
| 21.311.0553.0 | 6E / 5 DS | 258 |
| 21.311.0653.0 | 6E / 6 DS | 258 |
| 21.311.0753.0 | 6E / 7 DS | 258 |
| 21.311.0853.0 | 6E / 8 DS | 258 |
| 21.311.0953.0 | 6E / 9 DS | 258 |
| 21.311.1053.0 | 6E / 10 DS | 258 |
| 21.311.1253.0 | 6E DS | 258 |
| 21.312.0153.0 | 6E H / 1 | 257 |
| 21.312.0253.0 | 6E H / 2 | 257 |
| 21.312.0353.0 | 6E H / 3 | 257 |
| 21.312.0453.0 | 6E H / 4 | 257 |
| 21.312.0553.0 | 6E H / 5 | 257 |
| 21.312.0653.0 | 6E H / 6 | 257 |
| 21.312.0753.0 | 6E H / 7 | 257 |
| 21.312.0853.0 | 6E H / 8 | 257 |
| 21.312.0953.0 | 6E H / 9 | 257 |
| 21.312.1053.0 | 6E H / 10 | 257 |
| 21.312.1153.0 | 6E H / 11 | 257 |
| 21.312.1253.0 | 6E H | 257 |
| 21.313.0153.0 | 6E H / 1 DS | 257 |
| 21.313.0253.0 | 6E H / 2 DS | 257 |
| 21.313.0353.0 | 6E H / 3 DS | 257 |
| 21.313.0453.0 | 6E H / 4 DS | 257 |
| 21.313.0553.0 | 6E H / 5 DS | 257 |
| 21.313.0653.0 | 6E H / 6 DS | 257 |
| 21.313.0753.0 | 6E H / 7 DS | 257 |
| 21.313.0853.0 | 6E H / 8 DS | 257 |
| 21.313.0953.0 | 6E H / 9 DS | 257 |
| 21.313.1053.0 | 6E H / 10 DS | 257 |
| 21.313.1153.0 | 6E H / 11 DS | 257 |
| 21.313.1253.0 | 6E H DS | 257 |
| 21.330.5153.0 | 10E / 1 | 259 |
| 21.330.5253.0 | 10E / 2 | 259 |
| 21.330.5353.0 | 10E / 3 | 259 |
| 21.330.5453.0 | 10E / 4 | 259 |
| 21.330.5553.0 | 10E / 5 | 259 |
| 21.330.5653.0 | 10E / 6 | 259 |
| 21.330.5753.0 | 10E / 7 | 259 |

# contents


| Part no. | Type | section / page |
|---|---|---|
| 21.330.5853.0 | 10E / 8 | 259 |
| 21.330.5953.0 | 10E / 9 | 259 |
| 21.330.6053.0 | 10E / 10 | 259 |
| 21.330.6253.0 | 10E | 259 |
| 21.331.5153.0 | 10E / 1 DS | 259 |
| 21.331.5253.0 | 10E / 2 DS | 259 |
| 21.331.5353.0 | 10E / 3 DS | 259 |
| 21.331.5453.0 | 10E / 4 DS | 259 |
| 21.331.5553.0 | 10E / 5 DS | 259 |
| 21.331.5653.0 | 10E / 6 DS | 259 |
| 21.331.5753.0 | 10E / 7 DS | 259 |
| 21.331.5853.0 | 10E / 8 DS | 259 |
| 21.331.5953.0 | 10E / 9 DS | 259 |
| 21.331.6053.0 | 10E / 10 DS | 259 |
| 21.331.6253.0 | 10E DS | 259 |
| 21.340.3153.0 | 20E / 1 | 259 |
| 21.340.3253.0 | 20E / 2 | 259 |
| 21.340.3353.0 | 20E / 3 | 259 |
| 21.340.3453.0 | 20E / 4 | 259 |
| 21.340.3553.0 | 20E / 5 | 259 |
| 21.340.3653.0 | 20E / 6 | 259 |
| 21.340.3753.0 | 20E / 7 | 259 |
| 21.340.3853.0 | 20E / 8 | 259 |
| 21.340.3953.0 | 20E / 9 | 259 |
| 21.340.4053.0 | 20E / 10 | 259 |
| 21.340.4253.0 | 20E | 259 |
| 21.340.5153.0 | 16E / 1 | 259 |
| 21.340.5253.0 | 16E / 2 | 259 |
| 21.340.5353.0 | 16E / 3 | 259 |
| 21.340.5453.0 | 16E / 4 | 259 |
| 21.340.5553.0 | 16E / 5 | 259 |
| 21.340.5653.0 | 16E / 6 | 259 |
| 21.340.5753.0 | 16E / 7 | 259 |
| 21.340.5853.0 | 16E / 8 | 259 |
| 21.340.5953.0 | 16E / 9 | 259 |
| 21.340.6053.0 | 16E / 10 | 259 |
| 21.340.6253.0 | 16E | 259 |
| 21.341.3153.0 | 20E / 1 DS | 259 |
| 21.341.3253.0 | 20E / 2 DS | 259 |
| 21.341.3353.0 | 20E / 3 DS | 259 |
| 21.341.3453.0 | 20E / 4 DS | 259 |
| 21.341.3553.0 | 20E / 5 DS | 259 |
| 21.341.3653.0 | 20E / 6 DS | 259 |
| 21.341.3753.0 | 20E / 7 DS | 259 |
| 21.341.3853.0 | 20E / 8 DS | 259 |
| 21.341.3953.0 | 20E / 9 DS | 259 |
| 21.341.4053.0 | 20E / 10 DS | 259 |
| 21.341.4253.0 | 20E DS | 259 |
| 21.341.5153.0 | 16E / 1 DS | 259 |
| 21.341.5253.0 | 16E / 2 DS | 259 |
| 21.341.5353.0 | 16E / 3 DS | 259 |
| 21.341.5453.0 | 16E / 4 DS | 259 |
| 21.341.5553.0 | 16E / 5 DS | 259 |
| 21.341.5653.0 | 16E / 6 DS | 259 |
| 21.341.5753.0 | 16E / 7 DS | 259 |
| 21.341.5853.0 | 16E / 8 DS | 259 |
| 21.341.5953.0 | 16E / 9 DS | 259 |
| 21.341.6053.0 | 16E / 10 DS | 259 |
| 21.341.6253.0 | 16E DS | 259 |
| 22.310.0153.0 | 6ES / 1 | 258 |
| 22.310.0253.0 | 6ES / 2 | 258 |
| 22.310.0353.0 | 6ES / 3 | 258 |
| 22.310.0453.0 | 6ES / 4 | 258 |
| 22.310.0553.0 | 6ES / 5 | 258 |
| 22.310.0653.0 | 6ES / 6 | 258 |
| 22.310.0753.0 | 6ES / 7 | 258 |
| 22.310.0853.0 | 6ES / 8 | 258 |
| 22.310.0953.0 | 6ES / 9 | 258 |
| 22.310.1053.0 | 6ES / 10 | 258 |
| 22.310.1253.0 | 6ES | 258 |
| 25.000.0256.0 | LPST 1 / 2 | 330 |
| 25.000.0356.0 | LPST 1 / 3 | 330 |
| 25.000.0456.0 | LPST 1 / 4 | 330 |
| 25.000.0556.0 | LPST 1 / 5 | 330 |
| 25.000.0656.0 | LPST 1 / 6 | 330 |
| 25.000.0756.0 | LPST 1 / 7 | 330 |
| 25.000.0856.0 | LPST 1 / 8 | 330 |
| 25.000.0956.0 | LPST 1 / 9 | 330 |
| 25.000.1056.0 | LPST 1 / 10 | 330 |
| 25.000.1156.0 | LPST 1 / 11 | 330 |
| 25.000.1256.0 | LPST 1 / 12 | 330 |
| 25.000.1356.0 | LPST 1 / 13 | 330 |
| 25.000.1456.0 | LPST 1 / 14 | 330 |
| 25.000.1556.0 | LPST 1 / 15 | 330 |
| 25.000.1656.0 | LPST 1 / 16 | 330 |
| 25.001.0256.0 | LPSTL 1 / 2 | 330 |
| 25.001.0356.0 | LPSTL 1 / 3 | 330 |
| 25.001.0456.0 | LPSTL 1 / 4 | 330 |
| 25.001.0556.0 | LPSTL 1 / 5 | 330 |
| 25.001.0656.0 | LPSTL 1 / 6 | 330 |
| 25.001.0756.0 | LPSTL 1 / 7 | 330 |
| 25.001.0856.0 | LPSTL 1 / 8 | 330 |
| 25.001.0956.0 | LPSTL 1 / 9 | 330 |
| 25.001.1056.0 | LPSTL 1 / 10 | 330 |
| 25.001.1156.0 | LPSTL 1 / 11 | 330 |
| 25.001.1256.0 | LPSTL 1 / 12 | 330 |
| 25.001.1356.0 | LPSTL 1 / 13 | 330 |
| 25.001.1456.0 | LPSTL 1 / 14 | 330 |
| 25.001.1556.0 | LPSTL 1 / 15 | 330 |
| 25.001.1656.0 | LPSTL 1 / 16 | 330 |
| 25.002.0253.0 | DST85/ 2 | 328 |
| 25.002.0353.0 | DST85/ 3 | 328 |
| 25.002.0453.0 | DST85/ 4 | 328 |
| 25.002.0553.0 | DST85/ 5 | 328 |
| 25.002.0653.0 | DST85/ 6 | 328 |
| 25.002.0753.0 | DST85/ 7 | 328 |
| 25.002.0853.0 | DST85/ 8 | 328 |
| 25.002.0953.0 | DST85/ 9 | 328 |
| 25.002.1053.0 | DST85/10 | 328 |
| 25.002.1153.0 | DST85/11 | 328 |
| 25.002.1253.0 | DST85/12 | 328 |
| 25.003.0253.0 | DST85/ 2 OB | 328 |
| 25.003.0353.0 | DST85/ 3 OB | 328 |
| 25.003.0453.0 | DST85/ 4 OB | 328 |
| 25.003.0553.0 | DST85/ 5 OB | 328 |
| 25.003.0653.0 | DST85/ 6 OB | 328 |
| 25.003.0753.0 | DST85/ 7 OB | 328 |
| 25.003.0853.0 | DST85/ 8 OB | 328 |
| 25.003.0953.0 | DST85/ 9 OB | 328 |
| 25.003.1053.0 | DST85/10 OB | 328 |
| 25.003.1153.0 | DST85/11 OB | 328 |
| 25.003.1253.0 | DST85/12 OB | 328 |
| 25.004.0253.0 | DSTLF85/ 2 | 328 |
| 25.004.0353.0 | DSTLF85/ 3 | 328 |
| 25.004.0453.0 | DSTLF85/ 4 | 328 |
| 25.004.0553.0 | DSTLF85/ 5 | 328 |
| 25.004.0653.0 | DSTLF85/ 6 | 328 |
| 25.004.0753.0 | DSTLF85/ 7 | 328 |
| 25.004.0853.0 | DSTLF85/ 8 | 328 |
| 25.004.0953.0 | DSTLF85/ 9 | 328 |
| 25.004.1053.0 | DSTLF85/10 | 328 |
| 25.004.1153.0 | DSTLF85/11 | 328 |
| 25.004.1253.0 | DSTLF85/12 | 328 |
| 25.005.0253.0 | DSTLF85/ 2 OB | 328 |
| 25.005.0353.0 | DSTLF85/ 3 OB | 328 |
| 25.005.0453.0 | DSTLF85/ 4 OB | 328 |
| 25.005.0553.0 | DSTLF85/ 5 OB | 328 |
| 25.005.0653.0 | DSTLF85/ 6 OB | 328 |
| 25.005.0753.0 | DSTLF85/ 7 OB | 328 |
| 25.005.0853.0 | DSTLF85/ 8 OB | 328 |
| 25.005.0953.0 | DSTLF85/ 9 OB | 328 |
| 25.005.1053.0 | DSTLF85/10 OB | 328 |
| 25.005.1153.0 | DSTLF85/11 OB | 328 |
| 25.005.1253.0 | DSTLF85/12 OB | 328 |
| 25.010.0256.0 | LPST 1 / 2 OB | 330 |
| 25.010.0356.0 | LPST 1 / 3 OB | 330 |
| 25.010.0456.0 | LPST 1 / 4 OB | 330 |
| 25.010.0556.0 | LPST 1 / 5 OB | 330 |
| 25.010.0656.0 | LPST 1 / 6 OB | 330 |
| 25.010.0756.0 | LPST 1 / 7 OB | 330 |
| 25.010.0856.0 | LPST 1 / 8 OB | 330 |
| 25.010.0956.0 | LPST 1 / 9 OB | 330 |
| 25.010.1056.0 | LPST 1 / 10 OB | 330 |
| 25.010.1156.0 | LPST 1 / 11 OB | 330 |
| 25.010.1256.0 | LPST 1 / 12 OB | 330 |
| 25.010.1356.0 | LPST 1 / 13 OB | 330 |
| 25.010.1456.0 | LPST 1 / 14 OB | 330 |
| 25.010.1556.0 | LPST 1 / 15 OB | 330 |
| 25.010.1656.0 | LPST 1 / 16 OB | 330 |
| 25.130.0253.0 | 8190 / 2 | 358 |
| 25.130.0353.0 | 8190 / 3 | 358 |
| 25.130.0453.0 | 8190 / 4 | 358 |
| 25.130.0553.0 | 8190 / 5 | 358 |
| 25.130.0653.0 | 8190 / 6 | 358 |
| 25.130.0753.0 | 8190 / 7 | 358 |
| 25.130.0853.0 | 8190 / 8 | 358 |
| 25.130.0953.0 | 8190 / 9 | 358 |
| 25.130.1053.0 | 8190 / 10 | 358 |
| 25.130.1153.0 | 8190 / 11 | 358 |
| 25.130.1253.0 | 8190 / 12 | 358 |
| 25.130.1353.0 | 8190 / 13 | 358 |
| 25.130.1453.0 | 8190 / 14 | 358 |
| 25.130.1553.0 | 8190 / 15 | 358 |
| 25.130.1653.0 | 8190 / 16 | 358 |
| 25.130.3253.0 | 8190 E / 2 / 4 | 368 |
| 25.130.3353.0 | 8190 E / 3 / 6 | 368 |
| 25.130.3453.0 | 8190 E / 4 / 8 | 368 |
| 25.130.3553.0 | 8190 E / 5 / 10 | 368 |
| 25.130.3653.0 | 8190 E / 6 / 12 | 368 |
| 25.130.3753.0 | 8190 E / 7 / 14 | 368 |
| 25.130.3853.0 | 8190 E / 8 / 16 | 368 |
| 25.130.3953.0 | 8190 E / 9 / 18 | 368 |
| 25.130.4053.0 | 8190 E / 10 / 20 | 368 |
| 25.130.4153.0 | 8190 E / 11 / 22 | 368 |
| 25.130.4253.0 | 8190 E / 12 / 24 | 368 |
| 25.131.0253.0 | 8190 / 2 OB | 358 |
| 25.131.0353.0 | 8190 / 3 OB | 358 |
| 25.131.0453.0 | 8190 / 4 OB | 358 |
| 25.131.0553.0 | 8190 / 5 OB | 358 |
| 25.131.0653.0 | 8190 / 6 OB | 358 |
| 25.131.0753.0 | 8190 / 7 OB | 358 |
| 25.131.0853.0 | 8190 / 8 OB | 358 |
| 25.131.0953.0 | 8190 / 9 OB | 358 |
| 25.131.1053.0 | 8190 / 10 OB | 358 |
| 25.131.1153.0 | 8190 / 11 OB | 358 |
| 25.131.1253.0 | 8190 / 12 OB | 358 |
| 25.131.1353.0 | 8190 / 13 OB | 358 |
| 25.131.1453.0 | 8190 / 14 OB | 358 |
| 25.131.1553.0 | 8190 / 15 OB | 358 |
| 25.131.1653.0 | 8190 / 16 OB | 358 |
| 25.131.3253.0 | 8190 E / 2 / 4 OB | 368 |
| 25.131.3353.0 | 8190 E / 3 / 6 OB | 368 |
| 25.131.3453.0 | 8190 E / 4 / 8 OB | 368 |
| 25.131.3553.0 | 8190 E / 5 / 10 OB | 368 |
| 25.131.3653.0 | 8190 E / 6 / 12 OB | 368 |
| 25.131.3753.0 | 8190 E / 7 / 14 OB | 368 |
| 25.131.3853.0 | 8190 E / 8 / 16 OB | 368 |
| 25.131.3953.0 | 8190 E / 9 / 18 OB | 368 |
| 25.131.4053.0 | 8190 E / 10 / 20 OB | 368 |
| 25.131.4153.0 | 8190 E / 11 / 22 OB | 368 |
| 25.131.4253.0 | 8190 E / 12 / 24 OB | 368 |
| 25.132.0253.0 | 8190 / 4 / 2 | 358 |
| 25.132.0353.0 | 8190 / 6 / 3 | 358 |
| 25.132.0453.0 | 8190 / 8 / 4 | 358 |
| 25.132.0553.0 | 8190 / 10 / 5 | 358 |
| 25.132.0653.0 | 8190 / 12 / 6 | 358 |
| 25.132.0753.0 | 8190 / 14 / 7 | 358 |
| 25.132.0853.0 | 8190 / 16 / 8 | 358 |
| 25.132.0953.0 | 8190 / 18 / 9 | 358 |
| 25.132.1053.0 | 8190 / 20 / 10 | 358 |
| 25.132.1153.0 | 8190 / 22 / 11 | 358 |
| 25.132.1253.0 | 8190 / 24 / 12 | 358 |
| 25.133.0253.0 | 8190 / 4 / 2 OB | 358 |
| 25.133.0353.0 | 8190 / 6 / 3 OB | 358 |
| 25.133.0453.0 | 8190 / 8 / 4 OB | 358 |
| 25.133.0553.0 | 8190 / 10 / 5 OB | 358 |
| 25.133.0653.0 | 8190 / 12 / 6 OB | 358 |
| 25.133.0753.0 | 8190 / 14 / 7 OB | 358 |
| 25.133.0853.0 | 8190 / 16 / 8 OB | 358 |
| 25.133.0953.0 | 8190 / 18 / 9 OB | 358 |
| 25.133.1053.0 | 8190 / 20 / 10 OB | 358 |
| 25.133.1153.0 | 8190 / 22 / 11 OB | 358 |
| 25.133.1253.0 | 8190 / 24 / 12 OB | 358 |
| 25.150.0253.0 | 8390 / 2 | 359 |
| 25.150.0353.0 | 8390 / 3 | 359 |
| 25.150.0453.0 | 8390 / 4 | 359 |
| 25.150.0553.0 | 8390 / 5 | 359 |
| 25.150.0653.0 | 8390 / 6 | 359 |
| 25.150.0753.0 | 8390 / 7 | 359 |
| 25.150.0853.0 | 8390 / 8 | 359 |
| 25.150.0953.0 | 8390 / 9 | 359 |
| 25.150.1053.0 | 8390 / 10 | 359 |
| 25.150.1153.0 | 8390 / 11 | 359 |
| 25.150.1253.0 | 8390 / 12 | 359 |
| 25.151.0253.0 | 8390 / 2 OB | 359 |
| 25.151.0353.0 | 8390 / 3 OB | 359 |
| 25.151.0453.0 | 8390 / 4 OB | 359 |
| 25.151.0553.0 | 8390 / 5 OB | 359 |
| 25.151.0653.0 | 8390 / 6 OB | 359 |
| 25.151.0753.0 | 8390 / 7 OB | 359 |
| 25.151.0853.0 | 8390 / 8 OB | 359 |
| 25.151.0953.0 | 8390 / 9 OB | 359 |
| 25.151.1053.0 | 8390 / 10 OB | 359 |
| 25.151.1153.0 | 8390 / 11 OB | 359 |
| 25.151.1253.0 | 8390 / 12 OB | 359 |
| 25.153.0253.0 | 8195 D/ 2/ 6 | 372 |
| 25.153.0353.0 | 8195 D/ 3/ 9 | 372 |
| 25.153.0453.0 | 8195 D/ 4/12 | 372 |
| 25.153.0553.0 | 8195 D/ 5/15 | 372 |
| 25.153.0653.0 | 8195 D/ 6/18 | 372 |
| 25.153.0753.0 | 8195 D/ 7/21 | 372 |
| 25.153.0853.0 | 8195 D/ 8/24 | 372 |
| 25.153.0953.0 | 8195 D/ 9/27 | 372 |
| 25.153.1053.0 | 8195 D/ 10/30 | 372 |
| 25.153.2253.0 | 8195 D/ 2/ 6 OB | 372 |
| 25.153.2353.0 | 8195 D/ 3/ 9 OB | 372 |
| 25.153.2453.0 | 8195 D/ 4/12 OB | 372 |
| 25.153.2553.0 | 8195 D/ 5/15 OB | 372 |
| 25.153.2653.0 | 8195 D/ 6/18 OB | 372 |
| 25.153.2753.0 | 8195 D/ 7/21 OB | 372 |
| 25.153.2853.0 | 8195 D/ 8/24 OB | 372 |
| 25.153.2953.0 | 8195 D/ 9/27 OB | 372 |
| 25.153.3053.0 | 8195 D/ 10/30 OB | 372 |
| 25.153.4253.0 | 8195 D/ 2/ 6 VB1 | 372 |
| 25.153.4353.0 | 8195 D/ 3/ 9 VB1 | 372 |
| 25.153.4453.0 | 8195 D/ 4/12 VB1 | 372 |
| 25.153.4553.0 | 8195 D/ 5/15 VB1 | 372 |
| 25.153.4653.0 | 8195 D/ 6/18 VB1 | 372 |
| 25.153.4753.0 | 8195 D/ 7/21 VB1 | 372 |
| 25.153.4853.0 | 8195 D/ 8/24 VB1 | 372 |
| 25.153.4953.0 | 8195 D/ 9/27 VB1 | 372 |
| 25.153.5053.0 | 8195 D/ 10/30 VB1 | 372 |
| 25.153.6253.0 | 8195 D/ 2/ 6 VB1 OB | 372 |
| 25.153.6353.0 | 8195 D/ 3/ 9 VB1 OB | 372 |
| 25.153.6453.0 | 8195 D/ 4/12 VB1 OB | 372 |

# contents of part number

# contents PART NUMBER


| Part no. | Type | section / page |
|---|---|---|
| 25.153.6553.0 | 8195 D/ 5/15 VB1 OB | 372 |
| 25.153.6653.0 | 8195 D/ 6/18 VB1 OB | 372 |
| 25.153.6753.0 | 8195 D/ 7/21 VB1 OB | 372 |
| 25.153.6853.0 | 8195 D/ 8/24 VB1 OB | 372 |
| 25.153.6953.0 | 8195 D/ 9/27 VB1 OB | 372 |
| 25.153.7053.0 | 8195 D/ 10/30 VB1 OB | 372 |
| 25.154.0253.0 | 8195 V/ 2/ 8 | 373 |
| 25.154.0353.0 | 8195 v/ 3/12 | 373 |
| 25.154.0453.0 | 8195 V/ 4/16 | 373 |
| 25.154.0553.0 | 8195 V/ 5/20 | 373 |
| 25.154.0653.0 | 8195 V/ 6/24 | 373 |
| 25.154.0753.0 | 8195 V/ 7/28 | 373 |
| 25.154.0853.0 | 8195 V/ 8/32 | 373 |
| 25.154.0953.0 | 8195 V/ 9/36 | 373 |
| 25.154.1053.0 | 8195 V/ 10/40 | 373 |
| 25.154.2253.0 | 8195 V/ 2/ 8 OB | 373 |
| 25.154.2353.0 | 81195 V/ 3/12 OB | 373 |
| 25.154.2453.0 | 8195 V/ 4/16 OB | 373 |
| 25.154.2553.0 | 8195 V/ 5/20 OB | 373 |
| 25.154.2653.0 | 8195 V/ 6/24 OB | 373 |
| 25.154.2753.0 | 8195 V/ 7/28 OB | 373 |
| 25.154.2853.0 | 8195 V/ 8/32 OB | 373 |
| 25.154.2953.0 | 8195 V/ 9/36 OB | 373 |
| 25.154.3053.0 | 8195 V/ 10/40 OB | 373 |
| 25.154.4253.0 | 8195 V/ 2/ 8 VB1 | 373 |
| 25.154.4353.0 | 8195 V/ 3/12 VB1 | 373 |
| 25.154.4453.0 | 8195 V/ 4/16 VB1 | 373 |
| 25.154.4553.0 | 8195 V/ 5/20 VB1 | 373 |
| 25.154.4653.0 | 8195 V/ 6/24 VB1 | 373 |
| 25.154.4753.0 | 8195 V/ 7/28 VB1 | 373 |
| 25.154.4853.0 | 8195 V/ 8/32 VB1 | 373 |
| 25.154.4953.0 | 8195 V/ 9/36 VB1 | 373 |
| 25.154.5053.0 | 8195 V/ 10/40 VB1 | 373 |
| 25.154.6253.0 | 8195 V/ 2/ 8 VB1 OB | 373 |
| 25.154.6353.0 | 8195 V/ 3/12 VB1 OB | 373 |
| 25.154.6453.0 | 8195 V/ 4/16 VB1 OB | 373 |
| 25.154.6553.0 | 8195 V/ 5/20 VB1 OB | 373 |
| 25.154.6653.0 | 8195 V/ 6/24 VB1 OB | 373 |
| 25.154.6753.0 | 8195 V/ 7/28 VP1 OB | 373 |
| 25.154.6853.0 | 8195 V/ 8/32 VB1 OB | 373 |
| 25.154.6953.0 | 8195 V/ 9/36 VB1 OB | 373 |
| 25.154.7053.0 | 8591 V/ 10/40 VB1 OB | 373 |
| 25.155.0253.0 | 8191 R / 2 Z OB | 342 |
| 25.155.0353.0 | 8191 R / 3 Z OB | 342 |
| 25.155.0453.0 | 8191 R / 4 Z OB | 342 |
| 25.155.0553.0 | 8191 R / 5 Z OB | 342 |
| 25.155.0653.0 | 8191 R / 6 Z OB | 342 |
| 25.155.0753.0 | 8191 R / 7 Z OB | 342 |
| 25.155.0853.0 | 8191 R / 8 Z OB | 342 |
| 25.155.0953.0 | 8191 R / 9 Z OB | 342 |
| 25.155.1053.0 | 8191 R / 10 Z OB | 342 |
| 25.155.1153.0 | 8191 R / 11 Z OB | 342 |
| 25.155.1253.0 | 8191 R / 12 Z OB | 342 |
| 25.155.1353.0 | 8191 R / 13 Z OB | 342 |
| 25.155.1453.0 | 8191 R / 14 Z OB | 342 |
| 25.155.2253.0 | 8191 R / 2 Z | 342 |
| 25.155.2353.0 | 8191 R / 3 Z | 342 |
| 25.155.2453.0 | 8191 R / 4 Z | 342 |
| 25.155.2553.0 | 8191 R / 5 Z | 342 |
| 25.155.2653.0 | 8191 R / 6 Z | 342 |
| 25.155.2753.0 | 8191 R / 7 Z | 342 |
| 25.155.2853.0 | 8191 R / 8 Z | 342 |
| 25.155.2953.0 | 8191 R / 9 Z | 342 |
| 25.155.3053.0 | 8191 R / 10 Z | 342 |
| 25.155.3153.0 | 8191 R / 11 Z | 342 |
| 25.155.3253.0 | 8191 R / 12 Z | 342 |
| 25.155.3353.0 | 8191 R / 13 Z | 342 |
| 25.155.3453.0 | 8191 R / 14 Z | 342 |
| 25.156.0253.0 | 8291 R / 2 Z OB | 342 |
| 25.156.0353.0 | 8291 R / 3 Z OB | 342 |
| 25.156.0453.0 | 8291 R/ 4 Z OB | 342 |
| 25.156.0553.0 | 8291 R / 5 Z OB | 342 |
| 25.156.0653.0 | 8291 R / 6 Z OB | 342 |
| 25.156.0753.0 | 8291 R / 7 Z OB | 342 |
| 25.156.0853.0 | 8291 R / 8 Z OB | 342 |
| 25.156.0953.0 | 8291 R / 9 Z OB | 342 |
| 25.156.1053.0 | 8291 R / 10 Z OB | 342 |
| 25.156.1153.0 | 8291 R / 11 Z OB | 342 |
| 25.156.1253.0 | 8291 R / 12 Z OB | 342 |
| 25.156.1353.0 | 8291 R / 13 Z OB | 342 |
| 25.156.1453.0 | 8291 R / 14 Z OB | 342 |
| 25.156.2253.0 | 8291 R / 2 Z | 342 |
| 25.156.2353.0 | 8291 R / 3 Z | 342 |
| 25.156.2453.0 | 8291 R / 4 Z | 342 |
| 25.156.2553.0 | 8291 R / 5 Z | 342 |
| 25.156.2653.0 | 8291 R / 6 Z | 342 |
| 25.156.2753.0 | 8291 R / 7 Z | 342 |
| 25.156.2853.0 | 8291 R / 8 Z | 342 |
| 25.156.2953.0 | 8291 R / 9 Z | 342 |
| 25.156.3053.0 | 8291 R / 10 Z | 342 |
| 25.156.3153.0 | 8291 R / 11 Z | 342 |
| 25.156.3253.0 | 8291 R / 12 Z | 342 |
| 25.156.3353.0 | 8291 R / 13 Z | 342 |
| 25.156.3453.0 | 8291 R / 14 Z | 342 |
| 25.157.0253.0 | 8191 R / 3/ 2 Z OB | 343 |
| 25.157.0353.0 | 8191 R / 5/ 3 Z OB | 343 |
| 25.157.0453.0 | 8191 R / 7/ 4 Z OB | 343 |
| 25.157.0553.0 | 8191 R / 9/ 5 Z OB | 343 |
| 25.157.0653.0 | 8191 R / 11/ 6 Z OB | 343 |
| 25.157.0753.0 | 8191 R / 13/ 7 Z OB | 343 |
| 25.157.1253.0 | 8191 R / 3/ 2 Z | 343 |
| 25.157.1353.0 | 8191 R / 5/ 3 Z | 343 |
| 25.157.1453.0 | 8191 R / 7/ 4 Z | 343 |
| 25.157.1553.0 | 8191 R / 9/ 5 Z | 343 |
| 25.157.1653.0 | 8191 R / 11/ 6 Z | 343 |
| 25.157.1753.0 | 8191 R / 13/ 7 Z | 343 |
| 25.157.4253.0 | 8291 R / 3/ 2 Z OB | 343 |
| 25.157.4353.0 | 8291 R / 5/ 3 Z OB | 343 |
| 25.157.4453.0 | 8291 R / 7/ 4 Z OB | 343 |
| 25.157.4553.0 | 8291 R / 9/ 5 Z OB | 343 |
| 25.157.4653.0 | 8291 R / 11/ 6 Z OB | 343 |
| 25.157.4753.0 | 8291R / 13/ 7 Z OB | 343 |
| 25.157.5253.0 | 8291 R / 3/ 2 Z | 343 |
| 25.157.5353.0 | 8291 R / 5/ 3 Z | 343 |
| 25.157.5453.0 | 8291 R / 7/ 4 Z | 343 |
| 25.157.5553.0 | 8291 R / 9/ 5 Z | 343 |
| 25.157.5653.0 | 8291 R / 11/ 6 Z | 343 |
| 25.157.5753.0 | 8291 R / 13/ 7 Z | 343 |
| 25.160.0253.0 | 8191 / 2 | 344 |
| 25.160.0353.0 | 8191 / 3 | 344 |
| 25.160.0453.0 | 8191 / 4 | 344 |
| 25.160.0553.0 | 8191 / 5 | 344 |
| 25.160.0653.0 | 8191 / 6 | 344 |
| 25.160.0753.0 | 8191 / 7 | 344 |
| 25.160.0853.0 | 8191 / 8 | 344 |
| 25.160.0953.0 | 8191 / 9 | 344 |
| 25.160.1053.0 | 8191 / 10 | 344 |
| 25.160.1153.0 | 8191 / 11 | 344 |
| 25.160.1253.0 | 8191 / 12 | 344 |
| 25.160.1353.0 | 8191 / 13 | 344 |
| 25.160.1453.0 | 8191 / 14 | 344 |
| 25.160.1553.0 | 8191 / 15 | 344 |
| 25.160.1653.0 | 8191 / 16 | 344 |
| 25.160.6253.0 | 8191 / 2 ZW | 345 |
| 25.160.6353.0 | 8191 / 3 ZW | 345 |
| 25.160.6453.0 | 8191 / 4 ZW | 345 |
| 25.160.6553.0 | 8191 / 5 ZW | 345 |
| 25.160.6653.0 | 8191 / 6 ZW | 345 |
| 25.160.6753.0 | 8191 / 7 ZW | 345 |
| 25.160.6853.0 | 8191 / 8 ZW | 345 |
| 25.160.6953.0 | 8191 / 9 ZW | 345 |
| 25.160.7053.0 | 8191 / 10 ZW | 345 |
| 25.160.7153.0 | 8191 / 11 ZW | 345 |
| 25.160.7253.0 | 8191 / 12 ZW | 345 |
| 25.160.7353.0 | 8191 / 13 ZW | 345 |
| 25.160.7453.0 | 8191 / 14 ZW | 345 |
| 25.160.7553.0 | 8191 / 15 ZW | 345 |
| 25.160.7653.0 | 8191 / 16 ZW | 345 |
| 25.161.0253.0 | 8191 / 2 OB | 344 |
| 25.161.0353.0 | 8191 / 3 OB | 344 |
| 25.161.0453.0 | 8191 / 4 OB | 344 |
| 25.161.0553.0 | 8191 / 5 OB | 344 |
| 25.161.0653.0 | 8191 / 6 OB | 344 |
| 25.161.0753.0 | 8191 / 7 OB | 344 |
| 25.161.0853.0 | 8191 / 8 OB | 344 |
| 25.161.0953.0 | 8191 / 9 OB | 344 |
| 25.161.1053.0 | 8191 / 10 OB | 344 |
| 25.161.1153.0 | 8191 / 11 OB | 344 |
| 25.161.1253.0 | 8191 / 12 OB | 344 |
| 25.161.1353.0 | 8191 / 13 OB | 344 |
| 25.161.1453.0 | 8191 / 14 OB | 344 |
| 25.161.1553.0 | 8191 / 15 OB | 344 |
| 25.161.1653.0 | 8191 / 16 OB | 344 |
| 25.161.2553.0 | 8191 / 2 WVR OB | 594 |
| 25.161.2653.0 | 8191 / 3 WVR OB | 594 |
| 25.161.2853.0 | 8191 / 2 WVL OB | 594 |
| 25.161.2953.0 | 8191 / 3 WVL OB | 594 |
| 25.161.6253.0 | 8191 / 2 ZW OB | 345 |
| 25.161.6353.0 | 8191 / 3 ZW OB | 345 |
| 25.161.6453.0 | 8191 / 4 ZW OB | 345 |
| 25.161.6553.0 | 8191 / 5 ZW OB | 345 |
| 25.161.6653.0 | 8191 / 6 ZW OB | 345 |
| 25.161.6753.0 | 8191 / 7 ZW OB | 345 |
| 25.161.6853.0 | 8191 / 8 ZW OB | 345 |
| 25.161.6953.0 | 8191 / 9 ZW OB | 345 |
| 25.161.7053.0 | 8191 / 10 ZW OB | 345 |
| 25.161.7153.0 | 8191 / 11 ZW OB | 345 |
| 25.161.7253.0 | 8191 / 12 ZW OB | 345 |
| 25.161.7353.0 | 8191 / 13 ZW OB | 345 |
| 25.161.7453.0 | 8191 / 14 ZW OB | 345 |
| 25.161.7553.0 | 8191 / 15 ZW OB | 345 |
| 25.161.7653.0 | 8191 / 16 ZW OB | 345 |
| 25.162.0253.0 | 8291 / 2 | 344 |
| 25.162.0353.0 | 8291 / 3 | 344 |
| 25.162.0453.0 | 8291 / 4 | 344 |
| 25.162.0553.0 | 8291 / 5 | 344 |
| 25.162.0653.0 | 8291 / 6 | 344 |
| 25.162.0753.0 | 8291 / 7 | 344 |
| 25.162.0853.0 | 8291 / 8 | 344 |
| 25.162.0953.0 | 8291 / 9 | 344 |
| 25.162.1053.0 | 8291 / 10 | 344 |
| 25.162.1153.0 | 8291 / 11 | 344 |
| 25.162.1253.0 | 8291 / 12 | 344 |
| 25.162.1353.0 | 8291 / 13 | 344 |
| 25.162.1453.0 | 8291 / 14 | 344 |
| 25.162.1553.0 | 8291 / 15 | 344 |
| 25.162.1653.0 | 8291 / 16 | 344 |
| 25.162.6253.0 | 8291 / 2 ZW | 345 |
| 25.162.6353.0 | 8291 / 3 ZW | 345 |
| 25.162.6453.0 | 8291 / 4 ZW | 345 |
| 25.162.6553.0 | 8291 / 5 ZW | 345 |
| 25.162.6653.0 | 8291 / 6 ZW | 345 |
| 25.162.6753.0 | 8291 / 7 ZW | 345 |
| 25.162.6853.0 | 8291 / 8 ZW | 345 |
| 25.162.6953.0 | 8291 / 9 ZW | 345 |
| 25.162.7053.0 | 8291 / 10 ZW | 345 |
| 25.162.7153.0 | 8291 / 11 ZW | 345 |
| 25.162.7253.0 | 8291 / 12 ZW | 345 |
| 25.162.7353.0 | | 345 |
| 25.162.7453.0 | 8291 / 14 ZW | 345 |
| 25.162.7553.0 | 8291 / 15 ZW | 345 |
| 25.162.7653.0 | 8291 / 16 ZW | 345 |
| 25.163.0253.0 | 8291 / 2 OB | 344 |
| 25.163.0353.0 | 8291 / 3 OB | 344 |
| 25.163.0453.0 | 8291 / 4 OB | 344 |
| 25.163.0553.0 | 8291 / 5 OB | 344 |
| 25.163.0653.0 | 8291 / 6 OB | 344 |
| 25.163.0753.0 | 8291 / 7 OB | 344 |
| 25.163.0853.0 | 8291 / 8 OB | 344 |
| 25.163.0953.0 | 8291 / 9 OB | 344 |
| 25.163.1053.0 | 8291 / 10 OB | 344 |
| 25.163.1153.0 | 8291 / 11 OB | 344 |
| 25.163.1253.0 | 8291 / 12 OB | 344 |
| 25.163.1353.0 | 8291 / 13 OB | 344 |
| 25.163.1453.0 | 8291 / 14 OB | 344 |
| 25.163.1553.0 | 8291 / 15 OB | 344 |
| 25.163.1653.0 | 8291 / 16 OB | 344 |
| 25.163.6253.0 | 8291 / 2 ZW OB | 345 |
| 25.163.6353.0 | 8291 / 3 ZW OB | 345 |
| 25.163.6453.0 | 8291 / 4 ZW OB | 345 |
| 25.163.6553.0 | 8291 / 5 ZW OB | 345 |
| 25.163.6653.0 | 8291 / 6 ZW OB | 345 |
| 25.163.6753.0 | 8291 / 7 ZW OB | 345 |
| 25.163.6853.0 | 8291 / 8 ZW OB | 345 |
| 25.163.6953.0 | 8291 / 9 ZW OB | 345 |
| 25.163.7053.0 | 8291 / 10 ZW OB | 345 |
| 25.163.7153.0 | 8291 / 11 ZW OB | 345 |
| 25.163.7253.0 | 8291 / 12 ZW OB | 345 |
| 25.163.7353.0 | 8291 / 13 ZW OB | 345 |
| 25.163.7453.0 | 8291 / 14 ZW OB | 345 |
| 25.163.7553.0 | 8291 / 15 ZW OB | 345 |
| 25.163.7653.0 | 8291 / 16 ZW OB | 345 |
| 25.164.0253.0 | 8391 / 2 | 346 |
| 25.164.0353.0 | 8391 / 3 | 346 |
| 25.164.3253.0 | 8391 / 2 Z | 347 |
| 25.164.3353.0 | 8391 / 3 Z | 347 |
| 25.164.6253.0 | 8391 / 2 ZW | 347 |
| 25.164.6353.0 | 8391 / 3 ZW | 347 |
| 25.165.0253.0 | 8391 / 2 OB | 346 |
| 25.165.0353.0 | 8391 / 3 OB | 346 |
| 25.165.3253.0 | 8391 / 2 Z OB | 346 |
| 25.165.3353.0 | 8391 / 3 Z OB | 346 |
| 25.165.6253.0 | 8391 / 2 ZW OB | 347 |
| 25.165.6353.0 | 8391 / 3 ZW OB | 347 |
| 25.166.0253.0 | 8491 / 2 | 346 |
| 25.166.0353.0 | 8491 / 3 | 346 |
| 25.166.3253.0 | 8491 / 2 Z | 347 |
| 25.166.3353.0 | 8491 / 3 Z | 347 |
| 25.166.6253.0 | 8491 / 2 ZW | 347 |
| 25.166.6353.0 | 8491 / 3 ZW | 347 |
| 25.167.0253.0 | 8491 / 2 OB | 346 |
| 25.167.0353.0 | 8491 / 3 OB | 346 |
| 25.167.3253.0 | 8491 / 2 Z OB | 346 |
| 25.167.3353.0 | 8491 / 3 Z OB | 346 |
| 25.167.6253.0 | 8491 / 2 ZW OB | 347 |
| 25.167.6353.0 | 8491 / 3 ZW OB | 347 |
| 25.168.0253.0 | 8191 / 3/ 2 | 344 |
| 25.168.0353.0 | 8191 / 5/ 3 | 344 |
| 25.168.2253.0 | 8191 / 3/ 2 Z | 345 |
| 25.168.2353.0 | 8191 / 5/ 3 Z | 345 |
| 25.168.4253.0 | 8191 / 3/ 2 ZW | 345 |
| 25.168.4353.0 | 8191 / 5/ 3 ZW | 345 |
| 25.168.6253.0 | 8191 / 3/ 2 ZN | 344 |
| 25.168.6353.0 | 8191 / 5/ 3 ZN | 344 |
| 25.169.0253.0 | 8191 / 3/ 2 OB | 344 |
| 25.169.0353.0 | 8191 / 5/ 3 OB | 344 |
| 25.169.2253.0 | 8191 / 3/ 2 Z OB | 345 |
| 25.169.2353.0 | 8191 / 5/ 3 Z OB | 345 |
| 25.169.4253.0 | 8191 / 3/ 2 ZW OB | 345 |
| 25.169.4353.0 | 8191 / 5/ 3 ZW OB | 345 |
| 25.169.6253.0 | 8191 / 3/ 2 ZN OB | 344 |
| 25.169.6353.0 | 8191 / 5/ 3 ZN OB | 344 |
| 25.170.0253.0 | 8191 / 2 ZN | 344 |
| 25.170.0353.0 | 8191 / 3 ZN | 344 |
| 25.171.0253.0 | 8191 / 2 ZN OB | 344 |

# contents


| Part no. | Type | section / page |
|---|---|---|
| 25.171.0353.0 | 8191 / 3 ZN OB | 344 |
| 25.172.0253.0 | 8291 / 2 ZN | 344 |
| 25.172.0353.0 | 8291 / 3 ZN | 344 |
| 25.173.0253.0 | 8291 / 2 ZN OB | 344 |
| 25.173.0353.0 | 8291 / 3 ZN OB | 344 |
| 25.174.0253.0 | 8391 / 2 ZN | 347 |
| 25.174.0353.0 | 8391 / 3 ZN | 347 |
| 25.175.0253.0 | 8391 / 2 ZN OB | 346 |
| 25.175.0353.0 | 8391 / 3 ZN OB | 346 |
| 25.176.0253.0 | 8491 / 2 ZN | 347 |
| 25.176.0353.0 | 8491 / 3 ZN | 347 |
| 25.177.0253.0 | 8491 / 2 ZN OB | 346 |
| 25.177.0353.0 | 8491 / 3 ZN OB | 346 |
| 25.178.0253.0 | 8191 E / 2 / 4 | 366 |
| 25.178.0353.0 | 8191 E / 3 / 6 | 366 |
| 25.178.0453.0 | 8191 E / 4 / 8 | 366 |
| 25.178.0553.0 | 8191 E / 5 / 10 | 366 |
| 25.178.0653.0 | 8191 E / 6 / 12 | 366 |
| 25.178.0753.0 | 8191 E / 7 / 14 | 366 |
| 25.178.0853.0 | 8191 E / 8 / 16 | 366 |
| 25.178.0953.0 | 8191 E / 9 / 18 | 366 |
| 25.178.1053.0 | 8191 E / 10 / 20 | 366 |
| 25.178.1153.0 | 8191 E / 11 / 22 | 366 |
| 25.178.1253.0 | 8191 E / 12 / 24 | 366 |
| 25.178.4253.0 | 8191 E / 2 / 4 ZN | 366 |
| 25.178.4353.0 | 8191 E / 3 / 6 ZN | 366 |
| 25.178.5253.0 | 8191 E / 2 / 4 OB | 366 |
| 25.178.5353.0 | 8191 E / 3 / 6 OB | 366 |
| 25.178.5453.0 | 8191 E / 4 / 8 OB | 366 |
| 25.178.5553.0 | 8191 E / 5 / 10 OB | 366 |
| 25.178.5653.0 | 8191 E / 6 / 12 OB | 366 |
| 25.178.5753.0 | 8191 E / 7 / 14 OB | 366 |
| 25.178.5853.0 | 8191 E / 8 / 16 OB | 366 |
| 25.178.5953.0 | 8191 E / 9 / 18 OB | 366 |
| 25.178.6053.0 | 8191 E / 10 / 20 OB | 366 |
| 25.178.6153.0 | 8191 E / 11 / 22 OB | 366 |
| 25.178.6253.0 | 8191 E / 12 / 24 OB | 366 |
| 25.178.9253.0 | 8191 E / 2 / 4 ZN OB | 366 |
| 25.178.9353.0 | 8191 E / 3 / 6 ZN OB | 366 |
| 25.179.0253.0 | 8291 E / 2 / 4 | 366 |
| 25.179.0353.0 | 8291 E / 3 / 6 | 366 |
| 25.179.0453.0 | 8291 E / 4 / 8 | 366 |
| 25.179.0553.0 | 8291 E / 5 / 10 | 366 |
| 25.179.0653.0 | 8291 E / 6 / 12 | 366 |
| 25.179.0753.0 | 8291 E / 7 / 12 | 366 |
| 25.179.0853.0 | 8291 E / 8 / 16 | 366 |
| 25.179.0953.0 | 8291 E / 9 / 18 | 366 |
| 25.179.1053.0 | 8291 E / 10 / 20 | 366 |
| 25.179.1153.0 | 8291 E / 11 / 22 | 366 |
| 25.179.1253.0 | 8291 E / 12 / 24 | 366 |
| 25.179.4253.0 | 8291 E / 2 / 4 ZN | 366 |
| 25.179.4353.0 | 8291 E / 3 / 6 ZN | 366 |
| 25.179.5253.0 | 8291 E / 2 / 4 OB | 366 |
| 25.179.5353.0 | 8291 E / 3 / 6 OB | 366 |
| 25.179.5453.0 | 8291 E / 4 / 8 OB | 366 |
| 25.179.5553.0 | 8291 E / 5 / 10 OB | 366 |
| 25.179.5653.0 | 8291 E / 6 / 12 OB | 366 |
| 25.179.5753.0 | 8291 E / 7 / 14 OB | 366 |
| 25.179.5853.0 | 8291 E/ 8 / 16 OB | 366 |
| 25.179.5953.0 | 8291 E/ 9 / 18 OB | 366 |
| 25.179.6053.0 | 8291 E / 10 / 20 OB | 366 |
| 25.179.6153.0 | 8291 E / 11 / 22 OB | 366 |
| 25.179.6253.0 | 8291 E / 12 / 24 OB | 366 |
| 25.179.9253.0 | 8291 E / 2 / 4 ZN OB | 366 |
| 25.179.9353.0 | 8291 E / 3 / 6 ZN OB | 366 |
| 25.180.0253.0 | 8191 D / 2 / 6 | 370 |
| 25.180.0353.0 | 8191 D / 3 / 9 | 370 |
| 25.180.0453.0 | 8191 D / 4 / 12 | 370 |
| 25.180.0553.0 | 8191 D / 5 / 15 | 370 |
| 25.180.0653.0 | 8191 D / 6 / 18 | 370 |
| 25.180.0753.0 | 8191 D / 7 / 21 | 370 |
| 25.180.0853.0 | 8191 D / 8 / 24 | 370 |
| 25.180.0953.0 | | 370 |
| 25.180.1053.0 | 8191 D / 10 / 30 | 370 |
| 25.180.1153.0 | 8191 D / 11 / 33 | 370 |
| 25.180.1253.0 | 8191 D / 12 / 36 | 370 |
| 25.180.4253.0 | 8191 D / 2 / 6 ZN | 370 |
| 25.180.4353.0 | 8191 D / 3 / 9 ZN | 370 |
| 25.180.5253.0 | 8191 D / 2 / 6 OB | 370 |
| 25.180.5353.0 | 8191 D / 3 / 9 OB | 370 |
| 25.180.5453.0 | 8191 D / 4 / 12 OB | 370 |
| 25.180.5553.0 | 8191 D / 5 / 15 OB | 370 |
| 25.180.5653.0 | 8191 D / 6 / 18 OB | 370 |
| 25.180.5753.0 | 8191 D / 7 / 21 OB | 370 |
| 25.180.5853.0 | 8191 D / 8 / 24 OB | 370 |
| 25.180.5953.0 | 8191 D / 9 / 27 OB | 370 |
| 25.180.6053.0 | 8191 D / 10 / 30 OB | 370 |
| 25.180.6153.0 | 8191 D / 11 / 33 OB | 370 |
| 25.180.6253.0 | 8191 D / 12 / 36 OB | 370 |
| 25.180.9253.0 | 8191 D / 2 / 6 ZN OB | 370 |
| 25.180.9353.0 | 8191 D / 3 / 9 ZN OB | 370 |
| 25.181.0253.0 | 8291 D / 2 / 6 | 370 |
| 25.181.0353.0 | 8291 D / 3 / 9 | 370 |
| 25.181.0453.0 | 8291 D / 4 / 12 | 370 |
| 25.181.0553.0 | 8291 D / 5 / 15 | 370 |
| 25.181.0653.0 | 8291 D / 6 / 18 | 370 |
| 25.181.0753.0 | 8291 D / 7 / 21 | 370 |
| 25.181.0853.0 | 8291 D / 8 / 24 | 370 |
| 25.181.0953.0 | 8291 D / 9 / 27 | 370 |
| 25.181.1053.0 | 8291 D / 10 / 30 | 370 |
| 25.181.1153.0 | 8291 D / 11 / 33 | 370 |
| 25.181.1253.0 | 8291 D / 12 / 36 | 370 |
| 25.181.4253.0 | 8291 D / 2 / 6 ZN | 370 |
| 25.181.4353.0 | 8291 D / 3 / 9 ZN | 370 |
| 25.181.5253.0 | 8291 D / 2 / 6 OB | 370 |
| 25.181.5353.0 | 8291 D / 3 / 9 OB | 370 |
| 25.181.5453.0 | 8291 D / 4 / 12 OB | 370 |
| 25.181.5553.0 | 8291 D / 5 / 15 OB | 370 |
| 25.181.5653.0 | 8291 D / 6 / 18 OB | 370 |
| 25.181.5753.0 | 8291 D / 7 / 21 OB | 370 |
| 25.181.5853.0 | 8291 D / 8 / 24 OB | 370 |
| 25.181.5953.0 | 8291 D / 9 / 27 OB | 370 |
| 25.181.6053.0 | 8291 D / 10 / 30 OB | 370 |
| 25.181.6153.0 | 8291 D / 11 / 33 OB | 370 |
| 25.181.6253.0 | 8291 D / 12 / 36 OB | 370 |
| 25.181.9253.0 | 8291 D / 2 / 6 ZN OB | 370 |
| 25.181.9353.0 | 8291 D / 3 / 9 ZN OB | 370 |
| 25.190.0253.0 | 8192 / 2 | 338 |
| 25.190.0353.0 | 8192 / 3 | 338 |
| 25.190.0453.0 | 8192 / 4 | 338 |
| 25.190.0553.0 | 8192 / 5 | 338 |
| 25.190.0653.0 | 8192 / 6 | 338 |
| 25.190.0753.0 | 8192 / 7 | 338 |
| 25.190.0853.0 | 8192 / 8 | 338 |
| 25.190.0953.0 | 8192 / 9 | 338 |
| 25.190.1053.0 | 8192 / 10 | 338 |
| 25.190.1153.0 | 8192 / 11 | 338 |
| 25.190.1253.0 | 8192 / 12 | 338 |
| 25.190.1353.0 | 8192 / 13 | 338 |
| 25.190.1453.0 | 8192 / 14 | 338 |
| 25.190.1553.0 | 8192 / 15 | 338 |
| 25.190.1653.0 | 8192 / 16 | 338 |
| 25.190.9253.0 | 8192 / 2 ZN | 338 |
| 25.190.9353.0 | 8192 / 3 ZN | 338 |
| 25.191.0253.0 | 8192 / 2 OB | 338 |
| 25.191.0353.0 | 8192 / 3 OB | 338 |
| 25.191.0453.0 | 8192 / 4 OB | 338 |
| 25.191.0553.0 | 8192 / 5 OB | 338 |
| 25.191.0653.0 | 8192 / 6 OB | 338 |
| 25.191.0753.0 | 8192 / 7 OB | 338 |
| 25.191.0853.0 | 8192 / 8 OB | 338 |
| 25.191.0953.0 | 8192 / 9 OB | 338 |
| 25.191.1053.0 | 8192 / 10 OB | 338 |
| 25.191.1153.0 | 8192 / 11 OB | 338 |
| 25.191.1253.0 | 8192 / 12 OB | 338 |
| 25.191.1353.0 | 8192 / 13 OB | 338 |
| 25.191.1453.0 | 8192 / 14 OB | 338 |
| 25.191.1553.0 | 8192 / 15 OB | 338 |
| 25.191.1653.0 | 8192 / 16 OB | 338 |
| 25.191.6253.0 | 8192 / 2 ZW OB | 339 |
| 25.191.6353.0 | 8192 / 3 ZW OB | 339 |
| 25.191.6453.0 | 8192 / 4 ZW OB | 339 |
| 25.191.6553.0 | 8192 / 5 ZW OB | 339 |
| 25.191.6653.0 | 8192 / 6 ZW OB | 339 |
| 25.191.6753.0 | 8192 / 7 ZW OB | 339 |
| 25.191.6853.0 | 8192 / 8 ZW OB | 339 |
| 25.191.6953.0 | 8192 / 9 ZW OB | 339 |
| 25.191.7053.0 | 8192 / 10 ZW OB | 339 |
| 25.191.7153.0 | 8192 / 11 ZW OB | 339 |
| 25.191.7253.0 | 8192 / 12 ZW OB | 339 |
| 25.191.7353.0 | 8192 / 13 ZW OB | 339 |
| 25.191.7453.0 | 8192 / 14 ZW OB | 339 |
| 25.191.7553.0 | 8192 / 15 ZW OB | 339 |
| 25.191.7653.0 | 8192 / 16 ZW OB | 339 |
| 25.191.9253.0 | 8192 / 2 ZN OB | 338 |
| 25.191.9353.0 | 8192 / 3 ZN OB | 338 |
| 25.192.0253.0 | 8292 / 2 | 338 |
| 25.192.0353.0 | 8292 / 3 | 338 |
| 25.192.0453.0 | 8292 / 4 | 338 |
| 25.192.0553.0 | 8292 / 5 | 338 |
| 25.192.0653.0 | 8292 / 6 | 338 |
| 25.192.0753.0 | 8292 / 7 | 338 |
| 25.192.0853.0 | 8292 / 8 | 338 |
| 25.192.0953.0 | 8292 / 9 | 338 |
| 25.192.1053.0 | 8292 / 10 | 338 |
| 25.192.1153.0 | 8292 / 11 | 338 |
| 25.192.1253.0 | 8292 / 12 | 338 |
| 25.192.1353.0 | 8292 / 13 | 338 |
| 25.192.1453.0 | 8292 / 14 | 338 |
| 25.192.1553.0 | 8292 / 15 | 338 |
| 25.192.1653.0 | 8292 / 16 | 338 |
| 25.192.9253.0 | 8292 / 2 ZN | 338 |
| 25.192.9353.0 | 8292 / 3 ZN | 338 |
| 25.193.0253.0 | 8292 / 2 OB | 338 |
| 25.193.0353.0 | 8292 / 3 OB | 338 |
| 25.193.0453.0 | 8292 / 4 OB | 338 |
| 25.193.0553.0 | 8292 / 5 OB | 338 |
| 25.193.0653.0 | 8292 / 6 OB | 338 |
| 25.193.0753.0 | 8292 / 7 OB | 338 |
| 25.193.0853.0 | 8292 / 8 .OB | 338 |
| 25.193.0953.0 | 8292 / 9 OB | 338 |
| 25.193.1053.0 | 8292 / 10 OB | 338 |
| 25.193.1153.0 | 8292 / 11 OB | 338 |
| 25.193.1253.0 | 8292 / 12 OB | 338 |
| 25.193.1353.0 | 8292 / 13 OB | 338 |
| 25.193.1453.0 | 8292 / 14 OB | 338 |
| 25.193.1553.0 | 8292 / 15 OB | 338 |
| 25.193.1653.0 | 8292 / 16 OB | 338 |
| 25.193.6253.0 | 8292 / 2 ZW OB | 339 |
| 25.193.6353.0 | 8292 / 3 ZW OB | 339 |
| 25.193.6453.0 | 8292 / 4 ZW OB | 339 |
| 25.193.6553.0 | 8292 / 5 ZW OB | 339 |
| 25.193.6653.0 | 8292 / 6 ZW OB | 339 |
| 25.193.6753.0 | 8292 / 7 ZW OB | 339 |
| 25.193.6853.0 | 8292 / 8 ZW OB | 339 |
| 25.193.6953.0 | 8292 / 9 ZW OB | 339 |
| 25.193.7053.0 | 8292 / 10 ZW OB | 339 |
| 25.193.7153.0 | 8292 / 11 ZW OB | 339 |
| 25.193.7253.0 | 8292 / 12 ZW OB | 339 |
| 25.193.7353.0 | 8292 / 13 ZW OB | 339 |
| 25.193.7453.0 | 8292 / 14 ZW OB | 339 |
| 25.193.7553.0 | 8292 / 15 ZW OB | 339 |
| 25.193.7653.0 | 8292 / 16 ZW OB | 339 |
| 25.193.9253.0 | 8292 / 2 ZN OB | 338 |
| 25.193.9353.0 | 8292 / 3 ZN OB | 338 |
| 25.194.0253.0 | 8593 / 2 | 336 |
| 25.194.0353.0 | 8593 / 3 | 336 |
| 25.194.0453.0 | 8593 / 4 | 336 |
| 25.194.0553.0 | 8593 / 5 | 336 |
| 25.194.0653.0 | 8593 / 6 | 336 |
| 25.194.0753.0 | 8593 / 7 | 336 |
| 25.194.0853.0 | 8593 / 8 | 336 |
| 25.194.0953.0 | 8593 / 9 | 336 |
| 25.194.1053.0 | 8593 / 10 | 336 |
| 25.194.1153.0 | 8593 / 11 | 336 |
| 25.194.1253.0 | 8593 / 12 | 336 |
| 25.194.1353.0 | 8593 / 13 | 336 |
| 25.194.1453.0 | 8593 / 14 | 336 |
| 25.194.1553.0 | 8593 / 15 | 336 |
| 25.194.1653.0 | 8593 / 16 | 336 |
| 25.194.9253.0 | 8593 / 2 ZN | 336 |
| 25.194.9353.0 | 8593 / 3 ZN | 336 |
| 25.195.0253.0 | 8593 / 2 OB | 336 |
| 25.195.0353.0 | 8593 / 3 OB | 336 |
| 25.195.0453.0 | 8593 / 4 OB | 336 |
| 25.195.0553.0 | 8593 / 5 OB | 336 |
| 25.195.0653.0 | 8593 / 6 OB | 336 |
| 25.195.0753.0 | 8593 / 7 OB | 336 |
| 25.195.0853.0 | 8593 / 8 OB | 336 |
| 25.195.0953.0 | 8593 / 9 OB | 336 |
| 25.195.1053.0 | 8593 / 10 OB | 336 |
| 25.195.1153.0 | 8593 / 11 OB | 336 |
| 25.195.1253.0 | 8593 / 12 OB | 336 |
| 25.195.1353.0 | 8593 / 13 OB | 336 |
| 25.195.1453.0 | 8593 / 14 OB | 336 |
| 25.195.1553.0 | 8593 / 15 OB | 336 |
| 25.195.1653.0 | 8593 / 16 OB | 336 |
| 25.195.9253.0 | 8593 / 2 ZN OB | 336 |
| 25.195.9353.0 | 8593 / 3 ZN OB | 336 |
| 25.196.0253.0 | 8893 / 2 | 336 |
| 25.196.0353.0 | 8893 / 3 | 336 |
| 25.196.0453.0 | 8893 / 4 | 336 |
| 25.196.0553.0 | 8893 / 5 | 336 |
| 25.196.0653.0 | 8893 / 6 | 336 |
| 25.196.0753.0 | 8893 / 7 | 336 |
| 25.196.0853.0 | 8893 / 8 | 336 |
| 25.196.0953.0 | 8893 / 9 | 336 |
| 25.196.1053.0 | 8893 / 10 | 336 |
| 25.196.1153.0 | 8893 / 11 | 336 |
| 25.196.1253.0 | 8893 / 12 | 336 |
| 25.196.1353.0 | 8893 / 13 | 336 |
| 25.196.1453.0 | 8893 / 14 | 336 |
| 25.196.1553.0 | 8893 / 15 | 336 |
| 25.196.1653.0 | 8893 / 16 | 336 |
| 25.196.9253.0 | 8893 / 2 ZN | 336 |
| 25.196.9353.0 | 8893 / 3 ZN | 336 |
| 25.197.0253.0 | 8893 / 2 OB | 336 |
| 25.197.0353.0 | 8893 / 3 OB | 336 |
| 25.197.0453.0 | 8893 / 4 OB | 336 |
| 25.197.0553.0 | 8893 / 5 OB | 336 |
| 25.197.0653.0 | 8893 / 6 OB | 336 |
| 25.197.0753.0 | 8893 / 7 OB | 336 |
| 25.197.0853.0 | 8893 / 8 OB | 336 |
| 25.197.0953.0 | 8893 / 9 OB | 336 |
| 25.197.1053.0 | 8893 / 10 OB | 336 |
| 25.197.1153.0 | 8893 / 11 OB | 336 |
| 25.197.1253.0 | 8893 / 12 OB | 336 |
| 25.197.1353.0 | 8893 / 13 OB | 336 |
| 25.197.1453.0 | 8893 / 14 OB | 336 |
| 25.197.1553.0 | 8893 / 15 OB | 336 |
| 25.197.1653.0 | 8893 / 16 OB | 336 |
| 25.197.9253.0 | 8893 / 2 ZN OB | 336 |
| 25.197.9353.0 | 8893 / 3 ZN OB | 336 |
| 25.198.0253.0 | 8192 E / 2 / 4 | 364 |
| 25.198.0353.0 | 8192 E / 3 / 6 | 364 |

# contents of part number

# contents PART NUMBER


| Part no. | Type | section / page |
|---|---|---|
| 25.198.0453.0 | 8192 E / 4 / 8 | 364 |
| 25.198.0553.0 | 8192 E / 5 / 10 | 364 |
| 25.198.0653.0 | 8192 E / 6 / 12 | 364 |
| 25.198.0753.0 | 8192 E / 7 / 14 | 364 |
| 25.198.0853.0 | 8192 E / 8 / 16 | 364 |
| 25.198.0953.0 | 8192 E / 9 / 18 | 364 |
| 25.198.1053.0 | 8192 E / 10 / 20 | 364 |
| 25.198.1153.0 | 8192 E / 11 / 22 | 364 |
| 25.198.1253.0 | 8192 E / 12 / 24 | 364 |
| 25.198.4253.0 | 8192 E / 2 / 4 ZN | 364 |
| 25.198.4353.0 | 8192 E / 3 / 6 ZN | 364 |
| 25.198.5253.0 | 8192 E / 2 / 4 OB | 364 |
| 25.198.5353.0 | 8192 E / 3 / 6 OB | 364 |
| 25.198.5453.0 | 8192 E / 4 / 8 OB | 364 |
| 25.198.5553.0 | 8192 E / 5 / 10 OB | 364 |
| 25.198.5653.0 | 8192 E / 6 / 12 OB | 364 |
| 25.198.5753.0 | 8192 E / 7 / 14 OB | 364 |
| 25.198.5853.0 | 8192 E / 8 / 16 OB | 364 |
| 25.198.5953.0 | 8192 E / 9 / 18 OB | 364 |
| 25.198.6053.0 | 8192 E / 10 / 20 OB | 364 |
| 25.198.6153.0 | 8192 E / 11 / 22 OB | 364 |
| 25.198.6253.0 | 8192 E / 12 / 24 OB | 364 |
| 25.198.9253.0 | 8192 E / 2 / 4 ZN OB | 364 |
| 25.198.9353.0 | 8192 E / 3 / 6 ZN OB | 364 |
| 25.199.0253.0 | 8292 E / 2 / 4 | 364 |
| 25.199.0353.0 | 8292 E / 3 / 6 | 364 |
| 25.199.0453.0 | 8292 E / 4 / 8 | 364 |
| 25.199.0553.0 | 8292 E / 5 / 10 | 364 |
| 25.199.0653.0 | 8292 E / 6 / 12 | 364 |
| 25.199.0753.0 | 8292 E / 7 / 14 | 364 |
| 25.199.0853.0 | 8292 E / 8 / 16 | 364 |
| 25.199.0953.0 | 8292 E / 9 / 18 | 364 |
| 25.199.1053.0 | 8292 E / 10 / 20 | 364 |
| 25.199.1153.0 | 8292 E / 11 / 22 | 364 |
| 25.199.1253.0 | 8292 E / 12 / 24 | 364 |
| 25.199.4253.0 | 8292 E / 2 / 4 ZN | 364 |
| 25.199.4353.0 | 8292 E / 3 / 6 ZN | 364 |
| 25.199.5253.0 | 8292 E / 2 / 4 OB | 364 |
| 25.199.5353.0 | 8292 E / 3 / 6 OB | 364 |
| 25.199.5453.0 | 8292 E / 4 / 8 OB | 364 |
| 25.199.5553.0 | 8292 E / 5 / 10 OB | 364 |
| 25.199.5653.0 | 8292 E / 6 / 12 OB | 364 |
| 25.199.5753.0 | 8292 E / 7 / 14 OB | 364 |
| 25.199.5853.0 | 8292 E / 8 / 16 OB | 364 |
| 25.199.5953.0 | 8292 E / 9 / 18 OB | 364 |
| 25.199.6053.0 | 8292 E / 10 / 20 OB | 364 |
| 25.199.6153.0 | 8292 E / 11 / 22 OB | 364 |
| 25.199.6253.0 | 8292 E / 12 / 24 OB | 364 |
| 25.199.9253.0 | 8292 E / 2 / 4 ZN OB | 364 |
| 25.199.9353.0 | 8292 E / 3 / 6 ZN OB | 364 |
| 25.220.0253.0 | 8113 B / 2 TOP | 296 |
| 25.220.0353.0 | 8113 B / 3 TOP | 296 |
| 25.220.0453.0 | 8113 B / 4 TOP | 296 |
| 25.220.0553.0 | 8113 B / 5 TOP | 296 |
| 25.220.0653.0 | 8113 B / 6 TOP | 296 |
| 25.220.0753.0 | 8113 B / 7 TOP | 296 |
| 25.220.0853.0 | 8113 B / 8 TOP | 296 |
| 25.220.0953.0 | 8113 B / 9 TOP | 296 |
| 25.220.1053.0 | 8113 B / 10 TOP | 296 |
| 25.220.1153.0 | 8113 B / 11 TOP | 296 |
| 25.220.1253.0 | 8113 B / 12 TOP | 296 |
| 25.220.1353.0 | 8113 B / 13 TOP | 296 |
| 25.220.1453.0 | 8113 B / 14 TOP | 296 |
| 25.220.1553.0 | 8113 B / 15 TOP | 296 |
| 25.220.1653.0 | 8113 B / 16 TOP | 296 |
| 25.220.3253.0 | 8113 B / 2 TOP OB | 296 |
| 25.220.3353.0 | 8113 B / 3 TOP OB | 296 |
| 25.220.3453.0 | 8113 B / 4 TOP OB | 296 |
| 25.220.3553.0 | 8113 B / 5 TOP OB | 296 |
| 25.220.3653.0 | 8113 B / 6 TOP OB | 296 |
| 25.220.3753.0 | 8113 B / 7 TOP OB | 296 |
| 25.220.3853.0 | 8113 B / 8 TOP OB | 296 |
| 25.220.3953.0 | 8113 B / 9 TOP OB | 296 |
| 25.220.4053.0 | 8113 B / 10 TOP OB | 296 |
| 25.220.4153.0 | 8113 B / 11 TOP OB | 296 |
| 25.220.4253.0 | 8113 B / 12 TOP OB | 296 |
| 25.220.4353.0 | 8113 B / 13 TOP OB | 296 |
| 25.220.4453.0 | 8113 B / 14 TOP OB | 296 |
| 25.220.4553.0 | 8113 B / 15 TOP OB | 296 |
| 25.220.4653.0 | 8113 B / 16 TOP OB | 296 |
| 25.230.0253.0 | | 296 |
| 25.230.0353.0 | | 296 |
| 25.230.0453.0 | | 296 |
| 25.230.0553.0 | | 296 |
| 25.230.0653.0 | | 296 |
| 25.230.0753.0 | | 296 |
| 25.230.0853.0 | | 296 |
| 25.230.0953.0 | | 296 |
| 25.230.1053.0 | | 296 |
| 25.230.1153.0 | | 296 |
| 25.230.1253.0 | | 296 |
| 25.230.1353.0 | | 296 |
| 25.230.1453.0 | | 296 |
| 25.230.1553.0 | | 296 |
| 25.230.1653.0 | | 296 |

| Part no. | Type | section / page |
|---|---|---|
| 25.230.3253.0 | 8113 B / 2 TOP LED OB | 296 |
| 25.230.3353.0 | 8113 B / 3 TOP LED OB | 296 |
| 25.230.3453.0 | 8113 B / 4 TOP LED OB | 296 |
| 25.230.3553.0 | 8113 B / 5 TOP LED OB | 296 |
| 25.230.3653.0 | 8113 B / 6 TOP LED OB | 296 |
| 25.230.3753.0 | 8113 B / 7 TOP LED OB | 296 |
| 25.230.3853.0 | 8113 B / 8 TOP LED OB | 296 |
| 25.230.3953.0 | 8113 B / 9 TOP LED OB | 296 |
| 25.230.4053.0 | 8113 B / 10 TOP LED OB | 296 |
| 25.230.4153.0 | 8113 B / 11 TOP LED OB | 296 |
| 25.230.4253.0 | 8113 B / 12 TOP LED OB | 296 |
| 25.230.4353.0 | | 296 |
| 25.230.4453.0 | | 296 |
| 25.230.4553.0 | 8113 B / 15 TOP LED OB | 296 |
| 25.230.4653.0 | 8113 B / 16 TOP LED OB | 296 |
| 25.240.0253.0 | 8213 B / 2 TOP | 296 |
| 25.240.0353.0 | 8213 B / 3 TOP | 296 |
| 25.240.0453.0 | 8213 B / 4 TOP | 296 |
| 25.240.0553.0 | 8213 B / 5 TOP | 296 |
| 25.240.0653.0 | 8213 B / 6 TOP | 296 |
| 25.240.0753.0 | 8213 B / 7 TOP | 296 |
| 25.240.0853.0 | 8213 B / 8 TOP | 296 |
| 25.240.0953.0 | 8213 B / 9 TOP | 296 |
| 25.240.1053.0 | 8213 B / 10 TOP | 296 |
| 25.240.1153.0 | 8213 B / 11 TOP | 296 |
| 25.240.1253.0 | 8213 B / 12 TOP | 296 |
| 25.240.1353.0 | 8213 B / 13 TOP | 296 |
| 25.240.1453.0 | 8213 B / 14 TOP | 296 |
| 25.240.1553.0 | 8213 B / 15 TOP | 296 |
| 25.240.1653.0 | 8213 B / 16 TOP | 296 |
| 25.240.3253.0 | 8213 B / 2 TOP OB | 296 |
| 25.240.3353.0 | 8213 B / 3 TOP OB | 296 |
| 25.240.3453.0 | 8213 B / 4 TOP OB | 296 |
| 25.240.3553.0 | 8213 B / 5 TOP OB | 296 |
| 25.240.3653.0 | 8213 B / 6 TOP OB | 296 |
| 25.240.3753.0 | 8213 B / 7 TOP OB | 296 |
| 25.240.3853.0 | 8213 B / 8 TOP OB | 296 |
| 25.240.3953.0 | 8213 B / 9 TOP OB | 296 |
| 25.240.4053.0 | 8213 B / 10 TOP OB | 296 |
| 25.240.4153.0 | 8213 B / 11 TOP OB | 296 |
| 25.240.4253.0 | 8213 B / 12 TOP OB | 296 |
| 25.240.4353.0 | 8213 B / 13 TOP OB | 296 |
| 25.240.4453.0 | 8213 B / 14 TOP OB | 296 |
| 25.240.4553.0 | 8213 B / 15 TOP OB | 296 |
| 25.240.4653.0 | 8213 B / 16 TOP OB | 296 |
| 25.303.0253.0 | 8213 S 2 DFWW | 305 |
| 25.303.0353.0 | 8213 S / 3 DFWW | 305 |
| 25.303.0453.0 | 8213 S / 4 DFWW | 305 |
| 25.303.0553.0 | 8213 S / 5 DFWW | 305 |
| 25.303.0653.0 | 8213 S / 6 DFWW | 305 |
| 25.303.0753.0 | 8213 S / 7 DFWW | 305 |
| 25.303.0853.0 | 8213 S / 8 DFWW | 305 |
| 25.303.0953.0 | 8213 S / 9 DFWW | 305 |
| 25.303.1053.0 | 8213 S / 10 DFWW | 305 |
| 25.303.1153.0 | 8213 S / 11 DFWW | 305 |
| 25.303.1253.0 | 8213 S / 12 DFWW | 305 |
| 25.303.1353.0 | 8213 S / 13 DFWW | 305 |
| 25.303.1453.0 | 8213 s / 14 DFWW | 305 |
| 25.303.1553.0 | 8213 S / 15 DFWW | 305 |
| 25.303.1653.0 | 8213 S / 16 DFWW | 305 |
| 25.303.3253.0 | 8213 S / 2 DFLS | 305 |
| 25.303.3353.0 | 8213 S / 3 DFLS | 305 |
| 25.303.3453.0 | 8213 S / 4 DFLS | 305 |
| 25.303.3553.0 | 8213 S / 5 DFLS | 305 |
| 25.303.3653.0 | 8213 S / 6 DFLS | 305 |
| 25.303.3753.0 | 8213 S / 7 DFLS | 305 |
| 25.303.3853.0 | 8213 S / 8 DFLS | 305 |
| 25.303.3953.0 | 8213 S / 9 DFLS | 305 |
| 25.303.4053.0 | 8213 S / 10 DFLS | 305 |
| 25.303.4153.0 | 8213 S / 11 DFLS | 305 |
| 25.303.4253.0 | 8213 S / 12 DFLS | 305 |
| 25.303.4353.0 | 8213 S / 13 DFLS | 305 |
| 25.303.4453.0 | 8213 S / 14 DFLS | 305 |
| 25.303.4553.0 | 8213 S / 15 DFLS | 305 |
| 25.303.4653.0 | 8213 S / 16 DFLS | 305 |
| 25.313.0253.0 | 8213 S / 2 DFWW M | 305 |
| 25.313.0353.0 | 8213 S / 3 DFWW M | 305 |
| 25.313.0453.0 | 8213 S / 4 DFWW M | 305 |
| 25.313.0553.0 | 8213 S / 5 DFWW M | 305 |
| 25.313.0653.0 | 8213 S / 6 DFWW M | 305 |
| 25.313.0753.0 | 8213 S / 7 DFWW M | 305 |
| 25.313.0853.0 | 8213 S / 8 DFWW M | 305 |
| 25.313.0953.0 | 8213 S / 9 DFWW M | 305 |
| 25.313.1053.0 | 8213 S / 10 DFWW M | 305 |
| 25.313.1153.0 | 8213 S / 11 DFWW M | 305 |
| 25.313.1253.0 | 8213 S / 12 DFWW M | 305 |
| 25.313.1353.0 | 8213 S / 13 DFWW M | 305 |
| 25.313.1453.0 | 8213 S / 14 DFWW M | 305 |
| 25.313.1553.0 | 8213 S / 15 DFWW M | 305 |
| 25.313.1653.0 | 8213 S / 16 DFWW M | 305 |
| 25.313.3253.0 | 8213 S / 2 DFLS M | 305 |
| 25.313.3353.0 | 8213 S / 3 DFLS M | 305 |
| 25.313.3453.0 | 8213 S / 4 DFLS M | 305 |
| 25.313.3553.0 | 8213 S / 5 DFLS M | 305 |
| 25.313.3653.0 | 8213 S / 6 DFLS M | 305 |

| Part no. | Type | section / page |
|---|---|---|
| 25.313.3753.0 | 8213 S / 7 DFLS M | 305 |
| 25.313.3853.0 | 8213 S / 8 DFLS M | 305 |
| 25.313.3953.0 | 8213 S / 9 DFLS M | 305 |
| 25.313.4053.0 | 8213 S / 10 DFLS M | 305 |
| 25.313.4153.0 | 8213 S / 11 DFLS M | 305 |
| 25.313.4253.0 | 8213 S / 12 DFLS M | 305 |
| 25.313.4353.0 | 8213 S / 13 DFLS M | 305 |
| 25.313.4453.0 | 8213 S / 14 DFLS M | 305 |
| 25.313.4553.0 | 8213 S / 15 DFLS M | 305 |
| 25.313.4653.0 | 8213 S / 16 DFLS M | 305 |
| 25.320.0253.0 | 8113 B / 2 | 286 |
| 25.320.0353.0 | 8113 B / 3 | 286 |
| 25.320.0453.0 | 8113 B / 4 | 286 |
| 25.320.0553.0 | 8113 B / 5 | 286 |
| 25.320.0653.0 | 8113 B / 6 | 286 |
| 25.320.0753.0 | 8113 B / 7 | 286 |
| 25.320.0853.0 | 8113 B / 8 | 286 |
| 25.320.0953.0 | 8113 B / 9 | 286 |
| 25.320.1053.0 | 8113 B / 10 | 286 |
| 25.320.1153.0 | 8113 B / 11 | 286 |
| 25.320.1253.0 | 8113 B / 12 | 286 |
| 25.320.1353.0 | 8113 B / 13 | 286 |
| 25.320.1453.0 | 8113 B / 14 | 286 |
| 25.320.1553.0 | 8113 B / 15 | 286 |
| 25.320.1653.0 | 8113 B / 16 | 286 |
| 25.320.3253.0 | 8113 B / 2 OB | 286 |
| 25.320.3353.0 | 8113 B / 3 OB | 286 |
| 25.320.3453.0 | 8113 B / 4 OB | 286 |
| 25.320.3553.0 | 8113 B / 5 OB | 286 |
| 25.320.3653.0 | 8113 B / 6 OB | 286 |
| 25.320.3753.0 | 8113 B / 7 OB | 286 |
| 25.320.3853.0 | 8113 B / 8 OB | 286 |
| 25.320.3953.0 | 8113 B / 9 OB | 286 |
| 25.320.4053.0 | 8113 B / 10 OB | 286 |
| 25.320.4153.0 | 8113 B / 11 OB | 286 |
| 25.320.4253.0 | 8113 B / 12 OB | 286 |
| 25.320.4353.0 | 8113 B / 13 OB | 286 |
| 25.320.4453.0 | 8113 B / 14 OB | 286 |
| 25.320.4553.0 | 8113 B / 15 OB | 286 |
| 25.320.4653.0 | 8113 B / 16 OB | 286 |
| 25.322.0253.0 | 8113 B / 2 F | 286 |
| 25.322.0353.0 | 8113 B / 3 F | 286 |
| 25.322.0453.0 | 8113 B / 4 F | 286 |
| 25.322.0553.0 | 8113 B / 5 F | 286 |
| 25.322.0653.0 | 8113 B / 6 F | 286 |
| 25.322.0753.0 | 8113 B / 7 F | 286 |
| 25.322.0853.0 | 8113 B / 8 F | 286 |
| 25.322.0953.0 | 8113 B / 9 F | 286 |
| 25.322.1053.0 | 8113 B / 10 F | 286 |
| 25.322.1153.0 | 8113 B / 11 F | 286 |
| 25.322.1253.0 | 8113 B / 12 F | 286 |
| 25.322.1353.0 | 8113 B / 13 F | 286 |
| 25.322.1453.0 | 8113 B / 14 F | 286 |
| 25.322.1553.0 | 8113 B / 15 F | 286 |
| 25.322.1653.0 | 8113 B / 16 F | 286 |
| 25.322.3253.0 | 8113 B / 2 F OB | 286 |
| 25.322.3353.0 | 8113 B / 3 F OB | 286 |
| 25.322.3453.0 | 8113 B / 4 F OB | 286 |
| 25.322.3553.0 | 8113 B / 5 F OB | 286 |
| 25.322.3653.0 | 8113 B / 6 F OB | 286 |
| 25.322.3753.0 | 8113 B / 7 F OB | 286 |
| 25.322.3853.0 | 8113 B / 8 F OB | 286 |
| 25.322.3953.0 | 8113 B / 9 F OB | 286 |
| 25.322.4053.0 | 8113 B / 10 F OB | 286 |
| 25.322.4153.0 | 8113 B / 11 F OB | 286 |
| 25.322.4253.0 | 8113 B / 12 F OB | 286 |
| 25.322.4353.0 | 8113 B / 13 F OB | 286 |
| 25.322.4453.0 | 8113 B / 14 F OB | 286 |
| 25.322.4553.0 | 8113 B / 15 F OB | 286 |
| 25.322.4653.0 | 8113 B / 16 F OB | 286 |
| 25.323.0253.0 | 8213 B / 2 F | 286 |
| 25.323.0353.0 | 8213 B / 3 F | 286 |
| 25.323.0453.0 | 8213 B / 4 F | 286 |
| 25.323.0553.0 | 8213 B / 5 F | 286 |
| 25.323.0653.0 | 8213 B / 6 F | 286 |
| 25.323.0753.0 | 8213 B / 7 F | 286 |
| 25.323.0853.0 | 8213 B / 8 F | 286 |
| 25.323.0953.0 | 8213 B / 9 F | 286 |
| 25.323.1053.0 | 8213 B / 10 F | 286 |
| 25.323.1153.0 | 8213 B / 11 F | 286 |
| 25.323.1253.0 | 8213 B / 12 F | 286 |
| 25.323.1353.0 | 8213 B / 13 F | 286 |
| 25.323.1453.0 | 8213 B / 14 F | 286 |
| 25.323.1553.0 | 8213 B / 15 F | 286 |
| 25.323.1653.0 | 8213 B / 16 F | 286 |
| 25.323.3253.0 | 8213 B / 2 F OB | 286 |
| 25.323.3353.0 | 8213 B / 3 F OB | 286 |
| 25.323.3453.0 | 8213 B / 4 F OB | 286 |
| 25.323.3501.0 | 8213 B / 5 F OB GOLD | 411 |
| 25.323.3553.0 | 8213 B / 5 F OB | 286 |
| 25.323.3653.0 | 8213 B / 6 F OB | 286 |
| 25.323.3753.0 | 8213 B / 7 F OB | 286 |
| 25.323.3853.0 | 8213 B / 8 F OB | 286 |
| 25.323.3953.0 | 8213 B / 9 F OB | 286 |
| 25.323.4053.0 | 8213 B / 10 F OB | 286 |

# contents


| Part no. | Type | section / page |
|---|---|---|
| 25.323.4153.0 | 8213 B / 11 F OB | 286 |
| 25.323.4253.0 | 8213 B / 12 F OB | 286 |
| 25.323.4353.0 | 8213 B / 13 F OB | 286 |
| 25.323.4453.0 | 8213 B / 14 F OB | 286 |
| 25.323.4553.0 | 8213 B / 15 F OB | 286 |
| 25.323.4653.0 | 8213 B / 16 F OB | 286 |
| 25.324.0253.0 | 8313 B / 2 F | 288 |
| 25.324.0353.0 | 8313 B / 3 F | 288 |
| 25.324.0453.0 | 8313 B / 4 F | 288 |
| 25.324.0553.0 | 8313 B / 5 F | 288 |
| 25.324.0653.0 | 8313 B / 6 F | 288 |
| 25.324.0753.0 | 8313 B / 7 F | 288 |
| 25.324.0853.0 | 8313 B / 8 F | 288 |
| 25.324.0953.0 | 8313 B / 9 F | 288 |
| 25.324.1053.0 | 8313 B / 10 F | 288 |
| 25.324.1153.0 | 8313 B / 11 F | 288 |
| 25.324.1253.0 | 8313 B / 12 F | 288 |
| 25.324.2253.0 | 8313 B / 2 F OB | 288 |
| 25.324.2353.0 | 8313 B / 3 F OB | 288 |
| 25.324.2453.0 | 8313 B / 4 F OB | 288 |
| 25.324.2553.0 | 8313 B / 5 F OB | 288 |
| 25.324.2653.0 | 8313 B / 6 F OB | 288 |
| 25.324.2753.0 | 8313 B / 7 F OB | 288 |
| 25.324.2853.0 | 8313 B / 8 F OB | 288 |
| 25.324.2953.0 | 8313 B / 9 F OB | 288 |
| 25.324.3053.0 | 8313 B / 10 F OB | 288 |
| 25.324.3153.0 | 8313 B / 11 F OB | 288 |
| 25.324.3253.0 | 8313 B / 12 F OB | 288 |
| 25.324.4253.0 | 8413 B / 2 F | 288 |
| 25.324.4353.0 | 8413 B / 3 F | 288 |
| 25.324.4453.0 | 8413 B / 4 F | 288 |
| 25.324.4553.0 | 8413 B / 5 F | 288 |
| 25.324.4653.0 | 8413 B / 6 F | 288 |
| 25.324.4753.0 | 8413 B / 7 F | 288 |
| 25.324.4853.0 | 8413 B / 8 F | 288 |
| 25.324.4953.0 | 8413 B / 9 F | 288 |
| 25.324.5053.0 | 8413 B / 10 F | 288 |
| 25.324.5153.0 | 8413 B / 11 F | 288 |
| 25.324.5253.0 | 8413 B / 12 F | 288 |
| 25.324.6253.0 | 8413 B / 2 F OB | 288 |
| 25.324.6353.0 | 8413 B / 3 F OB | 288 |
| 25.324.6453.0 | 8413 B / 4 F OB | 288 |
| 25.324.6553.0 | 8413 B / 5 F OB | 288 |
| 25.324.6653.0 | 8413 B / 6 F OB | 288 |
| 25.324.6753.0 | 8413 B / 7 F OB | 288 |
| 25.324.6853.0 | 8413 B / 8 F OB | 288 |
| 25.324.6953.0 | 8413 B / 9 F OB | 288 |
| 25.324.7053.0 | 8413 B / 10 F OB | 288 |
| 25.324.7153.0 | 8413 B / 11 F OB | 288 |
| 25.324.7253.0 | 8413 B / 12 F OB | 288 |
| 25.325.0253.0 | 8113 B / 2 VR | 289 |
| 25.325.0353.0 | 8113 B / 3 VR | 289 |
| 25.325.0453.0 | 8113 B / 4 VR | 289 |
| 25.325.0553.0 | 8113 B / 5 VR | 289 |
| 25.325.0653.0 | 8113 B / 6 VR | 289 |
| 25.325.0753.0 | 8113 B / 7 VR | 289 |
| 25.325.0853.0 | 8113 B / 8 VR | 289 |
| 25.325.0953.0 | 8113 B / 9 VR | 289 |
| 25.325.1053.0 | 8113 B / 10 VR | 289 |
| 25.325.1153.0 | 8113 B / 11 VR | 289 |
| 25.325.1253.0 | 8113 B / 12 VR | 289 |
| 25.325.1353.0 | 8113 B / 13 VR | 289 |
| 25.325.1453.0 | 8113 B / 14 VR | 289 |
| 25.325.1553.0 | 8113 B / 15 VR | 289 |
| 25.325.1653.0 | 8113 B / 16 VR | 289 |
| 25.325.3253.0 | 8113 B / 2 VR OB | 289 |
| 25.325.3353.0 | 8113 B / 3 VR OB | 289 |
| 25.325.3453.0 | 8113 B / 4 VR OB | 289 |
| 25.325.3553.0 | 8113 B / 5 VR OB | 289 |
| 25.325.3653.0 | 8113 B / 6 VR OB | 289 |
| 25.325.3753.0 | 8113 B / 7 VR OB | 289 |
| 25.325.3853.0 | 8113 B / 8 VR OB | 289 |
| 25.325.3953.0 | 8113 B / 9 VR OB | 289 |
| 25.325.4053.0 | 8113 B / 10 VR OB | 289 |
| 25.325.4153.0 | 8113 B / 11 VR OB | 289 |
| 25.325.4253.0 | 8113 B / 12 VR OB | 289 |
| 25.325.4353.0 | 8113 B / 13 VR OB | 289 |
| 25.325.4453.0 | 8113 B / 14 VR OB | 289 |
| 25.325.4553.0 | 8113 B / 15 VR OB | 289 |
| 25.325.4653.0 | 8113 B / 16 VR OB | 289 |
| 25.326.0253.0 | 8113 B / 2 VL | 289 |
| 25.326.0353.0 | 8113 B / 3 VL | 289 |
| 25.326.0453.0 | 8113 B / 4 VL | 289 |
| 25.326.0553.0 | 8113 B / 5 VL | 289 |
| 25.326.0653.0 | 8113 B / 6 VL | 289 |
| 25.326.0753.0 | 8113 B / 7 VL | 289 |
| 25.326.0853.0 | 8113 B / 8 VL | 289 |
| 25.326.0953.0 | 8113 B / 9 VL | 289 |
| 25.326.1053.0 | 8113 B / 10 VL | 289 |
| 25.326.1153.0 | 8113 B / 11 VL | 289 |
| 25.326.1253.0 | 8113 B / 12 VL | 289 |
| 25.326.1353.0 | 8113 B / 13 VL | 289 |
| 25.326.1453.0 | 8113 B / 14 VL | 289 |
| 25.326.1553.0 | 8113 B / 15 VL | 289 |
| 25.326.1653.0 | 8113 B / 16 VL | 289 |
| 25.326.3253.0 | 8113 B / 2 VL OB | 289 |
| 25.326.3353.0 | 8113 B / 3 VL OB | 289 |
| 25.326.3453.0 | 8113 B / 4 VL OB | 289 |
| 25.326.3553.0 | 8113 B / 5 VL OB | 289 |
| 25.326.3653.0 | 8113 B / 6 VL OB | 289 |
| 25.326.3753.0 | 8113 B / 7 VL OB | 289 |
| 25.326.3853.0 | 8113 B / 8 VL OB | 289 |
| 25.326.3953.0 | 8113 B / 9 VL OB | 289 |
| 25.326.4053.0 | 8113 B / 10 VL OB | 289 |
| 25.326.4153.0 | 8113 B / 11 VL OB | 289 |
| 25.326.4253.0 | 8113 B / 12 VL OB | 289 |
| 25.326.4353.0 | 8113 B / 13 VL OB | 289 |
| 25.326.4453.0 | 8113 B / 14 VL OB | 289 |
| 25.326.4553.0 | 8113 B / 15 VL OB | 289 |
| 25.326.4653.0 | 8113 B / 16 VL OB | 289 |
| 25.330.3253.0 | 8113 S / 2 G OB | 297 |
| 25.330.3353.0 | 8113 S / 3 G OB | 297 |
| 25.330.3453.0 | 8113 S / 4 G OB | 297 |
| 25.330.3553.0 | 8113 S / 5 G OB | 297 |
| 25.330.3653.0 | 8113 S / 6 G OB | 297 |
| 25.330.3753.0 | 8113 S / 7 G OB | 297 |
| 25.330.3853.0 | 8113 S / 8 G OB | 297 |
| 25.330.3953.0 | 8113 S / 9 G OB | 297 |
| 25.330.4053.0 | 8113 S / 10 G OB | 297 |
| 25.330.4153.0 | 8113 S / 11 G OB | 297 |
| 25.330.4253.0 | 8113 S / 12 G OB | 297 |
| 25.330.4353.0 | 8113 S / 13 G OB | 297 |
| 25.330.4453.0 | 8113 S / 14 G OB | 297 |
| 25.330.4553.0 | 8113 S / 15 G OB | 297 |
| 25.330.4653.0 | 8113 S / 16 G OB | 297 |
| 25.332.3253.0 | 8113 S / 2 W OB | 298 |
| 25.332.3353.0 | 8113 S / 3 W OB | 298 |
| 25.332.3453.0 | 8113 S / 4 W OB | 298 |
| 25.332.3553.0 | 8113 S / 5 W OB | 298 |
| 25.332.3653.0 | 8113 S / 6 W OB | 298 |
| 25.332.3753.0 | 8113 S / 7 W OB | 298 |
| 25.332.3853.0 | 8113 S / 8 W OB | 298 |
| 25.332.3953.0 | 8113 S / 9 W OB | 298 |
| 25.332.4053.0 | 8113 S / 10 W OB | 298 |
| 25.332.4153.0 | 8113 S / 11 W OB | 298 |
| 25.332.4253.0 | 8113 S / 12 W OB | 298 |
| 25.332.4353.0 | 8113 S / 13 W OB | 298 |
| 25.332.4453.0 | 8113 S / 14 W OB | 298 |
| 25.332.4553.0 | 8113 S / 15 W OB | 298 |
| 25.332.4653.0 | 8113 S / 16 W OB | 298 |
| 25.334.3253.0 | 8113 S E / 2 G OB | 303 |
| 25.334.3353.0 | 8113 S E / 3 G OB | 303 |
| 25.336.3253.0 | 8113 S E / 2 W OB | 303 |
| 25.336.3353.0 | 8113 S E / 3 W OB | 303 |
| 25.338.3253.0 | 8113 S / 2 GF OB | 298 |
| 25.338.3353.0 | 8113 S / 3 GF OB | 298 |
| 25.338.3453.0 | 8113 S / 4 GF OB | 298 |
| 25.338.3553.0 | 8113 S / 5 GF OB | 298 |
| 25.338.3653.0 | 8113 S / 6 GF OB | 298 |
| 25.338.3753.0 | 8113 S / 7 GF OB | 298 |
| 25.338.3853.0 | 8113 S / 8 GF OB | 298 |
| 25.338.3953.0 | 8113 S / 9 GF OB | 298 |
| 25.338.4053.0 | 8113 S / 10 GF OB | 298 |
| 25.338.4153.0 | 8113 S / 11 GF OB | 298 |
| 25.338.4253.0 | 8113 S / 12 GF OB | 298 |
| 25.338.4353.0 | 8113 S / 13 GF OB | 298 |
| 25.338.4453.0 | 8113 S / 14 GF OB | 298 |
| 25.338.4553.0 | 8113 S / 15 GF OB | 298 |
| 25.338.4653.0 | 8113 S / 16 GF OB | 298 |
| 25.339.3253.0 | 8113 S / 2 WF OB | 299 |
| 25.339.3353.0 | 8113 S / 3 WF OB | 299 |
| 25.339.3453.0 | 8113 S / 4 WF OB | 299 |
| 25.339.3553.0 | 8113 S / 5 WF OB | 299 |
| 25.339.3653.0 | 8113 S / 6 WF OB | 299 |
| 25.339.3753.0 | 8113 S / 7 WF OB | 299 |
| 25.339.3853.0 | 8113 S / 8 WF OB | 299 |
| 25.339.3953.0 | 8113 S / 9 WF OB | 299 |
| 25.339.4053.0 | 8113 S / 10 WF OB | 299 |
| 25.339.4153.0 | 8113 S / 11 WF OB | 299 |
| 25.339.4253.0 | 8113 S / 12 WF OB | 299 |
| 25.339.4353.0 | 8113 S / 13 WF OB | 299 |
| 25.339.4453.0 | 8113 S / 14 WF OB | 299 |
| 25.339.4553.0 | 8113 S / 15 WF OB | 299 |
| 25.339.4653.0 | 8113 / 16 WF OB | 299 |
| 25.340.0253.0 | 8213 B / 2 | 286 |
| 25.340.0353.0 | 8213 B / 3 | 286 |
| 25.340.0453.0 | 8213 B / 4 | 286 |
| 25.340.0553.0 | 8213 B / 5 | 286 |
| 25.340.0653.0 | 8213 B / 6 | 286 |
| 25.340.0753.0 | 8213 B / 7 | 286 |
| 25.340.0853.0 | 8213 B / 8 | 286 |
| 25.340.0953.0 | 8213 B / 9 | 286 |
| 25.340.1053.0 | 8213 B / 10 | 286 |
| 25.340.1153.0 | 8213 B / 11 | 286 |
| 25.340.1253.0 | 8213 B / 12 | 286 |
| 25.340.1353.0 | 8213 B / 13 | 286 |
| 25.340.1453.0 | 8213 B / 14 | 286 |
| 25.340.1553.0 | 8213 B / 15 | 286 |
| 25.340.1653.0 | 8213 B / 16 | 286 |
| 25.340.3253.0 | 8213 B / 2 OB | 286 |
| 25.340.3353.0 | 8213 B / 3 OB | 286 |
| 25.340.3453.0 | 8213 B / 4 OB | 286 |
| 25.340.3553.0 | 8213 B / 5 OB | 286 |
| 25.340.3653.0 | 8213 B / 6 OB | 286 |
| 25.340.3753.0 | 8213 B / 7 OB | 286 |
| 25.340.3853.0 | 8213 B / 8 OB | 286 |
| 25.340.3953.0 | 8213 B / 9 OB | 286 |
| 25.340.4053.0 | 8213 B / 10 OB | 286 |
| 25.340.4153.0 | 8213 B / 11 OB | 286 |
| 25.340.4253.0 | 8213 B / 12 OB | 286 |
| 25.340.4353.0 | 8213 B / 13 OB | 286 |
| 25.340.4453.0 | 8213 B / 14 OB | 286 |
| 25.340.4553.0 | 8213 B / 15 OB | 286 |
| 25.340.4653.0 | 8213 B / 16 OB | 286 |
| 25.342.0253.0 | 8213 BL / 2 G | 295 |
| 25.342.0353.0 | 8213 BL / 3 G | 295 |
| 25.342.0453.0 | 8213 BL / 4 G | 295 |
| 25.342.0553.0 | 8213 BL / 5 G | 295 |
| 25.342.0653.0 | 8213 BL / 6 G | 295 |
| 25.342.0753.0 | 8213 BL / 7 G | 295 |
| 25.342.0853.0 | 8213 BL / 8 G | 295 |
| 25.342.0953.0 | 8213 BL / 9 G | 295 |
| 25.342.1053.0 | 8213 BL / 10 G | 295 |
| 25.342.1153.0 | 8213 BL / 11 G | 295 |
| 25.342.1253.0 | 8213 BL / 12 G | 295 |
| 25.342.1353.0 | 8213 BL / 13 G | 295 |
| 25.342.1453.0 | 8213 BL / 14 G | 295 |
| 25.342.1553.0 | 8213 BL / 15 G | 295 |
| 25.342.1653.0 | 8213 BL / 16 G | 295 |
| 25.342.3253.0 | 8213 BL / 2 G OB | 295 |
| 25.342.3353.0 | 8213 BL / 3 G OB | 295 |
| 25.342.3453.0 | 8213 BL / 4 G OB | 295 |
| 25.342.3553.0 | 8213 BL / 5 G OB | 295 |
| 25.342.3653.0 | 8213 BL / 6 G OB | 295 |
| 25.342.3753.0 | 8213 BL / 7 G OB | 295 |
| 25.342.3853.0 | 8213 BL / 8 G OB | 295 |
| 25.342.3953.0 | 8213BL / 9 G OB | 295 |
| 25.342.4053.0 | 8213 BL / 10 G OB | 295 |
| 25.342.4153.0 | 8213 BL / 11 G OB | 295 |
| 25.342.4253.0 | 8213 BL / 12 G OB | 295 |
| 25.342.4353.0 | 8213 BL / 13 G OB | 295 |
| 25.342.4453.0 | 8213 BL / 14 G OB | 295 |
| 25.342.4553.0 | 8213 BL / 15 G OB | 295 |
| 25.342.4653.0 | 8213 BL / 16 G OB | 295 |
| 25.343.0253.0 | 8213 BL / 2 W | 295 |
| 25.343.0353.0 | 8213 BL / 3 W | 295 |
| 25.343.0453.0 | 8213 BL / 4 W | 295 |
| 25.343.0553.0 | 8213 BL / 5 W | 295 |
| 25.343.0653.0 | 8213 BL / 6 W | 295 |
| 25.343.0753.0 | 8213 BL / 7 W | 295 |
| 25.343.0853.0 | 8213 BL / 8 W | 295 |
| 25.343.0953.0 | 8213 BL / 9 W | 295 |
| 25.343.1053.0 | 8213 BL / 10 W | 295 |
| 25.343.1153.0 | 8213 BL / 11 W | 295 |
| 25.343.1253.0 | 8213 BL / 12 W | 295 |
| 25.343.1353.0 | 8213 BL / 13 W | 295 |
| 25.343.1453.0 | 8213 BL / 14 W | 295 |
| 25.343.1553.0 | 8213 BL / 15 W | 295 |
| 25.343.1653.0 | 8213 BL / 16 W | 295 |
| 25.343.3253.0 | 8213 BL / 2 W OB | 295 |
| 25.343.3353.0 | 8213 BL / 3 W OB | 295 |
| 25.343.3453.0 | 8213 BL / 4 W OB | 295 |
| 25.343.3553.0 | 8213 BL / 5 W OB | 295 |
| 25.343.3653.0 | 8213 BL / 6 W OB | 295 |
| 25.343.3753.0 | 8213 BL / 7 W OB | 295 |
| 25.343.3853.0 | 8213 BL / 8 W OB | 295 |
| 25.343.3953.0 | 8213 BL / 9W OB | 295 |
| 25.343.4053.0 | 8213 BL / 10 W OB | 295 |
| 25.343.4153.0 | 8213 BL / 11 W OB | 295 |
| 25.343.4253.0 | 8213 BL / 12 W OB | 295 |
| 25.343.4353.0 | 8213 BL / 13 W OB | 295 |
| 25.343.4453.0 | 8213 BL / 14 W OB | 295 |
| 25.343.4553.0 | 8213 BL / 15 W OB | 295 |
| 25.343.4653.0 | 8213 BL / 16 W OB | 295 |
| 25.345.0253.0 | 8213 B / 2 VR | 289 |
| 25.345.0353.0 | 8213 B / 3 VR | 289 |
| 25.345.0453.0 | 8213 B / 4 VR | 289 |
| 25.345.0553.0 | 8213 B / 5 VR | 289 |
| 25.345.0653.0 | 8213 B / 6 VR | 289 |
| 25.345.0753.0 | 8213 B / 7 VR | 289 |
| 25.345.0853.0 | 8213 B / 8 VR | 289 |
| 25.345.0953.0 | 8213 B / 9 VR | 289 |
| 25.345.1053.0 | 8213 B / 10 VR | 289 |
| 25.345.1153.0 | 8213 B / 11 VR | 289 |
| 25.345.1253.0 | 8213 B / 12 VR | 289 |
| 25.345.1353.0 | 8213 B / 13 VR | 289 |
| 25.345.1453.0 | 8213 B / 14 VR | 289 |
| 25.345.1553.0 | 8213 B / 15 VR | 289 |
| 25.345.1653.0 | 8213 B / 16 VR | 289 |
| 25.345.3253.0 | 8213 B / 2 VR OB | 289 |
| 25.345.3353.0 | 8213 B / 3 VR OB | 289 |
| 25.345.3453.0 | 8213 B / 4 VR OB | 289 |
| 25.345.3553.0 | 8213 B / 5 VR OB | 289 |
| 25.345.3653.0 | 8213 B / 6 VR OB | 289 |
| 25.345.3753.0 | 8213 B / 7 VR OB | 289 |

# contents of part number

# contents PART NUMBER


| Part no. | Type | section / page |
|---|---|---|
| 25.345.3853.0 | 8213 B / 8 VR OB | 289 |
| 25.345.3953.0 | 8213 B / 9 VR OB | 289 |
| 25.345.4053.0 | 8213 B / 10 VR OB | 289 |
| 25.345.4153.0 | 8213 B / 11 VR OB | 289 |
| 25.345.4253.0 | 8213 B / 12 VR OB | 289 |
| 25.345.4353.0 | 8213 B / 13 VR OB | 289 |
| 25.345.4453.0 | 8213 B / 14 VR OB | 289 |
| 25.345.4553.0 | 8213 B / 15 VR OB | 289 |
| 25.345.4653.0 | 8213 B / 16 VR OB | 289 |
| 25.346.0253.0 | 8213 B / 2 VL | 289 |
| 25.346.0353.0 | 8213 B / 3 VL | 289 |
| 25.346.0453.0 | 8213 B / 4 VL | 289 |
| 25.346.0553.0 | 8213 B / 5 VL | 289 |
| 25.346.0653.0 | 8213 B / 6 VL | 289 |
| 25.346.0753.0 | 8213 B / 7 VL | 289 |
| 25.346.0853.0 | 8213 B / 8 VL | 289 |
| 25.346.0953.0 | 8213 B / 9 VL | 289 |
| 25.346.1053.0 | 8213 B / 10 VL | 289 |
| 25.346.1153.0 | 8213 B / 11 VL | 289 |
| 25.346.1253.0 | 8213 B / 12 VL | 289 |
| 25.346.1353.0 | 8213 B / 13 VL | 289 |
| 25.346.1453.0 | 8213 B / 14 VL | 289 |
| 25.346.1553.0 | 8213 B / 15 VL | 289 |
| 25.346.1653.0 | 8213 B / 16 VL | 289 |
| 25.346.3253.0 | 8213 B / 2 VL OB | 289 |
| 25.346.3353.0 | 8213 B / 3 VL OB | 289 |
| 25.346.3453.0 | 8213 B / 4 VL OB | 289 |
| 25.346.3553.0 | 8213 B / 5 VL OB | 289 |
| 25.346.3653.0 | 8213 B / 6 VL OB | 289 |
| 25.346.3753.0 | 8213 B / 7 VL OB | 289 |
| 25.346.3853.0 | 8213 B / 8 VL OB | 289 |
| 25.346.3953.0 | 8213 B / 9 VL OB | 289 |
| 25.346.4053.0 | 8213 B / 10 VL OB | 289 |
| 25.346.4153.0 | 8213 B / 11 VL OB | 289 |
| 25.346.4253.0 | 8213 B / 12 VL OB | 289 |
| 25.346.4353.0 | 8213 B / 13 VL OB | 289 |
| 25.346.4453.0 | 8213 B / 14 VL OB | 289 |
| 25.346.4553.0 | 8213 B / 15 VL OB | 289 |
| 25.346.4653.0 | 8213 B / 16 VL OB | 289 |
| 25.350.3253.0 | 8213 S / 2 G OB | 297 |
| 25.350.3353.0 | 8213 S / 3 G OB | 297 |
| 25.350.3453.0 | 8213 S / 4 G OB | 297 |
| 25.350.3553.0 | 8213 S / 5 G OB | 297 |
| 25.350.3653.0 | 8213 S / 6 G OB | 297 |
| 25.350.3753.0 | 8213 S / 7 G OB | 297 |
| 25.350.3853.0 | 8213 S / 8 G OB | 297 |
| 25.350.3953.0 | 8213 S / 9 G OB | 297 |
| 25.350.4053.0 | 8213 S / 10 G OB | 297 |
| 25.350.4153.0 | 8213 S / 11 G OB | 297 |
| 25.350.4253.0 | 8213 S / 12 G OB | 297 |
| 25.350.4353.0 | 8213 S / 13 G OB | 297 |
| 25.350.4453.0 | 8213 S / 14 G OB | 297 |
| 25.350.4553.0 | 8213 S / 15 G OB | 297 |
| 25.350.4653.0 | 8213 S / 16 G OB | 297 |
| 25.352.3253.0 | 8213 S / 2 W OB | 298 |
| 25.352.3353.0 | 8213 S / 3 W OB | 298 |
| 25.352.3453.0 | 8213 S / 4 W OB | 298 |
| 25.352.3553.0 | 8213 S / 5 W OB | 298 |
| 25.352.3653.0 | 8213 S / 6 W OB | 298 |
| 25.352.3753.0 | 8213 S / 7 W OB | 298 |
| 25.352.3853.0 | 8213 S / 8 W OB | 298 |
| 25.352.3953.0 | 8213 S / 9 W OB | 298 |
| 25.352.4053.0 | 8213 S / 10 W OB | 298 |
| 25.352.4153.0 | 8213 S / 11 W OB | 298 |
| 25.352.4253.0 | 8213 S / 12 W OB | 298 |
| 25.352.4353.0 | 8213 S / 13 W OB | 298 |
| 25.352.4453.0 | 8213 S / 14 W OB | 298 |
| 25.352.4553.0 | 8213 S / 15 W OB | 298 |
| 25.352.4653.0 | 8213 S / 16 W OB | 298 |
| 25.354.3253.0 | 8213 S E / 2 G OB | 303 |
| 25.354.3353.0 | 8213 S E / 3 G OB | 303 |
| 25.356.3253.0 | 8213 S E / 2 W OB | 303 |
| 25.356.3353.0 | 8213 S E / 3 W OB | 303 |
| 25.358.3253.0 | 8213 S / 2 WF OB | 299 |
| 25.358.3353.0 | 8213 S / 3 WF OB | 299 |
| 25.358.3453.0 | 8213 S / 4 WF OB | 299 |
| 25.358.3553.0 | 8213 S / 5 WF OB | 299 |
| 25.358.3653.0 | 8213 S / 6 WF OB | 299 |
| 25.358.3753.0 | 8213 S / 7 WF OB | 299 |
| 25.358.3853.0 | 8213 S / 8 WF OB | 299 |
| 25.358.3953.0 | 8213 S / 9 WF OB | 299 |
| 25.358.4053.0 | 8213 S / 10 WF OB | 299 |
| 25.358.4153.0 | 8213 S / 11 WF OB | 299 |
| 25.358.4253.0 | 8213 S / 12 WF OB | 299 |
| 25.358.4353.0 | 8213 S / 13 WF OB | 299 |
| 25.358.4453.0 | 8213 S / 14 WF OB | 299 |
| 25.358.4553.0 | 8213 S / 15 WF OB | 299 |
| 25.358.4653.0 | 8213 S / 16 WF OB | 299 |
| 25.359.3253.0 | 8213 S / 2 GF OB | 298 |
| 25.359.3353.0 | 8213 S / 3 GF OB | 298 |
| 25.359.3453.0 | 8213 S / 4 GF OB | 298 |
| 25.359.3553.0 | 8213 S / 5 GF OB | 298 |
| 25.359.3653.0 | 8213 S / 6 GF OB | 298 |
| 25.359.3753.0 | 8213 S / 7 GF OB | 298 |
| 25.359.3853.0 | 8213 S / 8 GF OB | 298 |
| 25.359.3953.0 | 8213 S / 9 GF OB | 298 |
| 25.359.4053.0 | 8213 S / 10 GF OB | 298 |
| 25.359.4153.0 | 8213 S / 11 GF OB | 298 |
| 25.359.4253.0 | 8213 S / 12 GF OB | 298 |
| 25.359.4353.0 | 8213 S / 13 GF OB | 298 |
| 25.359.4453.0 | 8213 S / 14 GF OB | 298 |
| 25.359.4553.0 | 8213 S / 15 GF OB | 298 |
| 25.359.4653.0 | 8213 S / 16 GF OB | 298 |
| 25.360.0253.0 | 8313 B / 2 | 288 |
| 25.360.0353.0 | 8313 B / 3 | 288 |
| 25.360.0453.0 | 8313 B / 4 | 288 |
| 25.360.0553.0 | 8313 B / 5 | 288 |
| 25.360.0653.0 | 8313 B / 6 | 288 |
| 25.360.0753.0 | 8313 B / 7 | 288 |
| 25.360.0853.0 | 8313 B / 8 | 288 |
| 25.360.0953.0 | 8313 B / 9 | 288 |
| 25.360.1053.0 | 8313 B / 10 | 288 |
| 25.360.1153.0 | 8313 B / 11 | 288 |
| 25.360.1253.0 | 8313 B / 12 | 288 |
| 25.360.3253.0 | 8313 B / 2 OB | 288 |
| 25.360.3353.0 | 8313 B / 3 OB | 288 |
| 25.360.3453.0 | 8313 B / 4 OB | 288 |
| 25.360.3553.0 | 8313 B / 5 OB | 288 |
| 25.360.3653.0 | 8313 B / 6 OB | 288 |
| 25.360.3753.0 | 8313 B / 7 OB | 288 |
| 25.360.3853.0 | 8313 B / 8 OB | 288 |
| 25.360.3953.0 | 8313 B / 9 OB | 288 |
| 25.360.4053.0 | 8313 B / 10 OB | 288 |
| 25.360.4153.0 | 8313 B / 11 OB | 288 |
| 25.360.4253.0 | 8313 B / 12 OB | 288 |
| 25.370.3253.0 | 8313 S / 2 G OB | 300 |
| 25.370.3353.0 | 8313 S / 3 G OB | 300 |
| 25.370.3453.0 | 8313 S / 4 G OB | 300 |
| 25.370.3553.0 | 8313 S / 5 G OB | 300 |
| 25.370.3653.0 | 8313 S / 6 G OB | 300 |
| 25.370.3753.0 | 8313 S / 7 G OB | 300 |
| 25.370.3853.0 | 8313 S / 8 G OB | 300 |
| 25.370.3953.0 | 8313 S / 9 G OB | 300 |
| 25.370.4053.0 | 8313 S / 10 G OB | 300 |
| 25.370.4153.0 | 8313 S / 11 G OB | 300 |
| 25.370.4253.0 | 8313 S / 12 G OB | 300 |
| 25.372.3253.0 | 8313 S / 2 W OB | 301 |
| 25.372.3353.0 | 8313 S / 3 W OB | 301 |
| 25.372.3453.0 | 8313 S / 4 W OB | 301 |
| 25.372.3553.0 | 8313 S / 5 W OB | 301 |
| 25.372.3653.0 | 8313 S / 6 W OB | 301 |
| 25.372.3753.0 | 8313 S / 7 W OB | 301 |
| 25.372.3853.0 | 8313 S / 8 W OB | 301 |
| 25.372.3953.0 | 8313 S / 9 W OB | 301 |
| 25.372.4053.0 | 8313 S / 10 W OB | 301 |
| 25.372.4153.0 | 8313 S / 11 W OB | 301 |
| 25.372.4253.0 | 8313 S / 12 W OB | 301 |
| 25.374.2253.0 | 8313 S / 2 WF OB | 301 |
| 25.374.2353.0 | 8313 S / 3 WF OB | 301 |
| 25.374.2453.0 | 8313 S / 4 WF OB | 301 |
| 25.374.2553.0 | 8313 S / 5 WF OB | 301 |
| 25.374.2653.0 | 8313 S / 6 WF OB | 301 |
| 25.374.2753.0 | 8313 S / 7 WF OB | 301 |
| 25.374.2853.0 | 8313 S / 8 WF OB | 301 |
| 25.374.2953.0 | 8313 S / 9 WF OB | 301 |
| 25.374.3053.0 | 8313 S / 10 WF OB | 301 |
| 25.374.3153.0 | 8313 S / 11 WF OB | 301 |
| 25.374.3253.0 | 8313 S / 12 WF OB | 301 |
| 25.374.6253.0 | 8313 S / 2 GF OB | 300 |
| 25.374.6353.0 | 8313 S / 3 GF OB | 300 |
| 25.374.6453.0 | 8313 S / 4 GF OB | 300 |
| 25.374.6553.0 | 8313 S / 5 GF OB | 300 |
| 25.374.6653.0 | 8313 S / 6 GF OB | 300 |
| 25.374.6753.0 | 8313 S / 7 GF OB | 300 |
| 25.374.6853.0 | 8313 S / 8 GF OB | 300 |
| 25.374.6953.0 | 8313 S / 9 GF OB | 300 |
| 25.374.7053.0 | 8313 S / 10 GF OB | 300 |
| 25.374.7153.0 | 8313 S / 11 GF OB | 300 |
| 25.374.7253.0 | 8313 S / 12 GF OB | 300 |
| 25.380.0253.0 | 8413 B / 2 | 288 |
| 25.380.0353.0 | 8413 B / 3 | 288 |
| 25.380.0453.0 | 8413 B / 4 | 288 |
| 25.380.0553.0 | 8413 B / 5 | 288 |
| 25.380.0653.0 | 8413 B / 6 | 288 |
| 25.380.0753.0 | 8413 B / 7 | 288 |
| 25.380.0853.0 | 8413 B / 8 | 288 |
| 25.380.0953.0 | 8413 B / 9 | 288 |
| 25.380.1053.0 | 8413 B / 10 | 288 |
| 25.380.1153.0 | 8413 B / 11 | 288 |
| 25.380.1253.0 | 8413 B / 12 | 288 |
| 25.380.3253.0 | 8413 B / 2 OB | 288 |
| 25.380.3353.0 | 8413 B / 3 OB | 288 |
| 25.380.3453.0 | 8413 B / 4 OB | 288 |
| 25.380.3553.0 | 8413 B / 5 OB | 288 |
| 25.380.3653.0 | 8413 B / 6 OB | 288 |
| 25.380.3753.0 | 8413 B / 7 OB | 288 |
| 25.380.3853.0 | 8413 B / 8 OB | 288 |
| 25.380.3953.0 | 8413 B / 9 OB | 288 |
| 25.380.4053.0 | 8413 B / 10 OB | 288 |
| 25.380.4153.0 | 8413 B / 11 OB | 288 |
| 25.380.4253.0 | 8413 B / 12 OB | 288 |
| 25.385.0253.0 | 8413 B / 2 VR | 290 |
| 25.385.0353.0 | 8413 B / 3 VR | 290 |
| 25.385.0453.0 | 8413 B / 4 VR | 290 |
| 25.385.0553.0 | 8413 B / 5 VR | 290 |
| 25.385.0653.0 | 8413 B / 6 VR | 290 |
| 25.385.0753.0 | 8413 B / 7 VR | 290 |
| 25.385.0853.0 | 8413 B / 8 VR | 290 |
| 25.385.0953.0 | 8413 B / 9 VR | 290 |
| 25.385.1053.0 | 8413 B / 10 VR | 290 |
| 25.385.1153.0 | 8413 B / 11 VR | 290 |
| 25.385.1253.0 | 8413 B / 12 VR | 290 |
| 25.385.2253.0 | 8413 B / 2 VR OB | 290 |
| 25.385.2353.0 | 8413 B / 3 VR OB | 290 |
| 25.385.2453.0 | 8413 B / 4 VR OB | 290 |
| 25.385.2553.0 | 8413 B / 5 VR OB | 290 |
| 25.385.2653.0 | 8413 B / 6 VR OB | 290 |
| 25.385.2753.0 | 8413 B / 7 VR OB | 290 |
| 25.385.2853.0 | 8413 B / 8 VR OB | 290 |
| 25.385.2953.0 | 8413 B / 9 VR OB | 290 |
| 25.385.3053.0 | 8413 B / 10 VR OB | 290 |
| 25.385.3153.0 | 8413 B / 11 VR OB | 290 |
| 25.385.3253.0 | 8413 B / 12 VR OB | 290 |
| 25.386.0253.0 | 8413 B / 2 VL | 290 |
| 25.386.0353.0 | 8413 B / 3 VL | 290 |
| 25.386.0453.0 | 8413 B / 4 VL | 290 |
| 25.386.0553.0 | 8413 B / 5 VL | 290 |
| 25.386.0653.0 | 8413 B / 6 VL | 290 |
| 25.386.0753.0 | 8413 B / 7 VL | 290 |
| 25.386.0853.0 | 8413 B / 8 VL | 290 |
| 25.386.0953.0 | 8413 B / 9 VL | 290 |
| 25.386.1053.0 | 8413 B / 10 VL | 290 |
| 25.386.1153.0 | 8413 B / 11 VL | 290 |
| 25.386.1253.0 | 8413 B / 12 VL | 290 |
| 25.386.2253.0 | 8413 B / 2 VL OB | 290 |
| 25.386.2353.0 | 8413 B / 3 VL OB | 290 |
| 25.386.2453.0 | 8413 B / 4 VL OB | 290 |
| 25.386.2553.0 | 8413 B / 5 VL OB | 290 |
| 25.386.2653.0 | 8413 B / 6 VL OB | 290 |
| 25.386.2753.0 | 8413 B / 7 VL OB | 290 |
| 25.386.2853.0 | 8413 B / 8 VL OB | 290 |
| 25.386.2953.0 | 8413 B / 9 VL OB | 290 |
| 25.386.3053.0 | 8413 B / 10 VL OB | 290 |
| 25.386.3153.0 | 8413 B / 11 VL OB | 290 |
| 25.386.3253.0 | 8413 B / 12 VL OB | 290 |
| 25.390.3253.0 | 8413 S / 2 G OB | 300 |
| 25.390.3353.0 | 8413 S / 3 G OB | 300 |
| 25.390.3453.0 | 8413 S / 4 G OB | 300 |
| 25.390.3553.0 | 8413 S / 5 G OB | 300 |
| 25.390.3653.0 | 8413 S / 6 G OB | 300 |
| 25.390.3753.0 | 8413 S / 7 G OB | 300 |
| 25.390.3853.0 | 8413 S / 8 G OB | 300 |
| 25.390.3953.0 | 8413 S / 9 G OB | 300 |
| 25.390.4053.0 | 8413 S / 10 G OB | 300 |
| 25.390.4153.0 | 8413 S / 11 G OB | 300 |
| 25.390.4253.0 | 8413 S / 12 G OB | 300 |
| 25.392.3253.0 | 8413 S / 2 W OB | 301 |
| 25.392.3353.0 | 8413 S / 3 W OB | 301 |
| 25.392.3453.0 | 8413 S / 4 W OB | 301 |
| 25.392.3553.0 | 8413 S / 5 W OB | 301 |
| 25.392.3653.0 | 8413 S / 6 W OB | 301 |
| 25.392.3753.0 | 8413 S / 7 W OB | 301 |
| 25.392.3853.0 | 8413 S / 8 W OB | 301 |
| 25.392.3953.0 | 8413 S / 9 W OB | 301 |
| 25.392.4053.0 | 8413 S / 10 W OB | 301 |
| 25.392.4153.0 | 8413 S / 11 W OB | 301 |
| 25.392.4253.0 | 8413 S / 12 W OB | 301 |
| 25.394.3253.0 | 8113 S / 2 S OB GR | 302 |
| 25.394.3353.0 | 8113 S / 3 S OB GR | 302 |
| 25.394.3453.0 | 8113 S / 4 S OB GR | 302 |
| 25.394.3553.0 | 8113 S / 5 S OB GR | 302 |
| 25.394.3653.0 | 8113 S / 6 S OB GR | 302 |
| 25.394.3753.0 | 8113 S / 7 S OB GR | 302 |
| 25.394.3853.0 | 8113 S / 8 S OB GR | 302 |
| 25.394.3953.0 | 8113 S / 9 S OB GR | 302 |
| 25.394.4053.0 | 8113 S / 10 S OB GR | 302 |
| 25.394.4153.0 | 8113 S / 11 S OB GR | 302 |
| 25.394.4253.0 | 8113 S / 12 S OB GR | 302 |
| 25.394.4353.0 | 8113 S / 13 S OB GR | 302 |
| 25.394.4453.0 | 8113 S / 14 S OB GR | 302 |
| 25.394.4553.0 | 8113 S / 15 S OB GR | 302 |
| 25.394.4653.0 | 8113 S / 16 S OB GR | 302 |
| 25.395.3253.0 | 8113 S / 2 S1 OB GR | 302 |
| 25.395.3353.0 | 8113 S / 3 S1 OB | 302 |
| 25.395.3453.0 | 8113 S / 4 S1 OB | 302 |
| 25.395.3553.0 | 8113 S / 5 S1 OB | 302 |
| 25.395.3653.0 | 8113 S / 6 S1 OB | 302 |
| 25.395.3753.0 | 8113 S / 7 S1 OB | 302 |
| 25.395.3853.0 | 8113 S / 8 S1 OB | 302 |
| 25.395.3953.0 | 8113 S / 9 S1 OB | 302 |
| 25.395.4053.0 | 8113 S / 10 S1 OB | 302 |
| 25.395.4153.0 | 8113 S / 11 S1 OB | 302 |
| 25.395.4253.0 | 8113 S / 12 S1 OB GR | 302 |
| 25.395.4353.0 | 8113 S / 13 S1 OB | 302 |
| 25.395.4453.0 | 8113 S / 14 S1 OB | 302 |

# contents


| Part no. | Type | section / page |
|---|---|---|
| 25.395.4553.0 | 8113 S / 15 S1 OB | 302 |
| 25.395.4653.0 | 8113 S / 16 S1 OB | 302 |
| 25.396.3253.0 | 8213 S / 2 S OB GR | 302 |
| 25.396.3353.0 | 8213 S / 3 S OB GR | 302 |
| 25.396.3453.0 | 8213 S / 4 S OB GR | 302 |
| 25.396.3553.0 | 8213 S / 5 S OB GR | 302 |
| 25.396.3653.0 | 8213 S / 6 S OB GR | 302 |
| 25.396.3753.0 | 8213 S / 7 S OB GR | 302 |
| 25.396.3853.0 | 8213 S / 8 S OB GR | 302 |
| 25.396.3953.0 | 8213 S / 9 S OB GR | 302 |
| 25.396.4053.0 | 8213 S / 10 S OB GR | 302 |
| 25.396.4153.0 | 8213 S / 11 S OB GR | 302 |
| 25.396.4253.0 | 8213 S / 12 S OB GR | 302 |
| 25.396.4353.0 | 8213 S / 13 S OB GR | 302 |
| 25.396.4453.0 | 8213 S / 14 S OB GR | 302 |
| 25.396.4553.0 | 8213 S / 15 S OB GR | 302 |
| 25.396.4653.0 | 8213 S / 16 S OB GR | 302 |
| 25.397.3253.0 | 8213 S / 2 S1 OB GR | 302 |
| 25.397.3353.0 | 8213 S / 3 S1 OB GR | 302 |
| 25.397.3453.0 | 8213 S / 4 S1 OB GR | 302 |
| 25.397.3553.0 | 8213 S / 5 S1 OB GR | 302 |
| 25.397.3653.0 | 8213 S / 6 S1 OB GR | 302 |
| 25.397.3753.0 | 8213 S / 7 S1 OB GR | 302 |
| 25.397.3853.0 | 8213 S / 8 S1 OB GR | 302 |
| 25.397.3953.0 | 8213 S / 9 S1 OB GR | 302 |
| 25.397.4053.0 | 8213 S / 10 S1 OB GR | 302 |
| 25.397.4153.0 | 8213 S / 11 S1 OB GR | 302 |
| 25.397.4253.0 | 8213 S / 12 S1 OB GR | 302 |
| 25.397.4353.0 | 8213 S / 13 S1 OB GR | 302 |
| 25.397.4453.0 | 8213 S / 14 S1 OB GR | 302 |
| 25.397.4553.0 | 8213 S / 15 S1 OB GR | 302 |
| 25.397.4653.0 | 8213 S / 16 S1 OB GR | 302 |
| 25.398.2253.0 | 8413 S / 2 WF OB | 301 |
| 25.398.2353.0 | 8413 S / 3 WF OB | 301 |
| 25.398.2453.0 | 8413 S / 4 WF OB | 301 |
| 25.398.2553.0 | 8413 S / 5 WF OB | 301 |
| 25.398.2653.0 | 8413 S / 6 WF OB | 301 |
| 25.398.2753.0 | 8413 S / 7 WF OB | 301 |
| 25.398.2853.0 | 8413 S / 8 WF OB | 301 |
| 25.398.2953.0 | 8413 S / 9 WF OB | 301 |
| 25.398.3053.0 | 8413 S / 10 WF OB | 301 |
| 25.398.3153.0 | 8413 S / 11 WF OB | 301 |
| 25.398.3253.0 | 8413 S / 12 WF OB | 301 |
| 25.398.6253.0 | 8413 S / 2 GF OB | 300 |
| 25.398.6353.0 | 8413 S / 3 GF OB | 300 |
| 25.398.6453.0 | 8413 S / 4 GF OB | 300 |
| 25.398.6553.0 | 8413 S / 5 GF OB | 300 |
| 25.398.6653.0 | 8413 S / 6 GF OB | 300 |
| 25.398.6753.0 | 8413 S / 7 GF OB | 300 |
| 25.398.6853.0 | 8413 S / 8 GF OB | 300 |
| 25.398.6953.0 | 8413 S / 9 GF OB | 300 |
| 25.398.7053.0 | 8413 S / 10 GF OB | 300 |
| 25.398.7153.0 | 8413 S / 11 GF OB | 300 |
| 25.398.7253.0 | 8413 S / 12 GF OB | 300 |
| 25.399.9853.0 | 8113 BSK /2 0,75 OB | 392 |
| 25.399.9853.5 | 8113 B / 2 SK0.75 OB | 392 |
| 25.399.9853.8 | 8113 B / 2 SK0.75 OB | 392 |
| 25.470.0253.0 | 8520 B / 2 OB | 324 |
| 25.470.0353.0 | 8520 B / 3 OB | 324 |
| 25.470.0453.0 | 8520 B / 4 OB | 324 |
| 25.470.0553.0 | 8520 B / 5 OB | 324 |
| 25.470.0653.0 | 8520 B / 6 OB | 324 |
| 25.470.0753.0 | 8520 B / 7 OB | 324 |
| 25.470.0853.0 | 8520 B / 8 OB | 324 |
| 25.470.0953.0 | 8520 B / 9 OB | 324 |
| 25.470.1053.0 | 8520 B / 10 OB | 324 |
| 25.470.1153.0 | 8520 B / 11 OB | 324 |
| 25.470.1253.0 | 8520 B / 12 OB | 324 |
| 25.470.1353.0 | 8520 B / 13 OB | 324 |
| 25.470.1453.0 | 8520 B / 14 OB | 324 |
| 25.470.1553.0 | 8520 B / 15 OB | 324 |
| 25.470.1653.0 | 8520 B / 16 OB | 324 |
| 25.470.3253.0 | | 324 |
| 25.470.3353.0 | 8520 B / 3 | 324 |
| 25.470.3453.0 | | 324 |
| 25.470.3553.0 | | 324 |
| 25.470.3653.0 | | 324 |
| 25.470.3753.0 | 8520 B / 7 | 324 |
| 25.470.3853.0 | 8520 B / 8 | 324 |
| 25.470.3953.0 | | 324 |
| 25.470.4053.0 | | 324 |
| 25.470.4153.0 | 8520 B / 11 | 324 |
| 25.470.4253.0 | | 324 |
| 25.470.4353.0 | 8520 B / 13 | 324 |
| 25.470.4453.0 | 8520 B / 14 | 324 |
| 25.470.4553.0 | 8520 B / 15 | 324 |
| 25.470.4653.0 | 8520 B / 16 | 324 |
| 25.471.0253.0 | 8520 BL / 2 W OB | 325 |
| 25.471.0353.0 | 8520 BL / 3 W OB | 325 |
| 25.471.0453.0 | | 325 |
| 25.471.0553.0 | | 325 |
| 25.471.0653.0 | | 325 |
| 25.471.0753.0 | 8520 BL / 7 W OB | 325 |
| 25.471.0853.0 | | 325 |
| 25.471.0953.0 | | 325 |
| 25.471.1053.0 | | 325 |
| 25.471.1153.0 | 8520 BL / 11 W OB | 325 |
| 25.471.1253.0 | | 325 |
| 25.471.1353.0 | 8520 BL / 13 W OB | 325 |
| 25.471.1453.0 | 8520 BL / 14 W OB | 325 |
| 25.471.1553.0 | 8520 BL / 15 W OB | 325 |
| 25.471.1653.0 | | 325 |
| 25.471.3253.0 | | 325 |
| 25.471.3353.0 | | 325 |
| 25.471.3453.0 | | 325 |
| 25.471.3553.0 | | 325 |
| 25.471.3653.0 | 8520 BL / 6 W | 325 |
| 25.471.3753.0 | 8520 BL / 7 W | 325 |
| 25.471.3853.0 | | 325 |
| 25.471.3953.0 | | 325 |
| 25.471.4053.0 | | 325 |
| 25.471.4153.0 | 8520 BL / 11 W | 325 |
| 25.471.4253.0 | | 325 |
| 25.471.4353.0 | 8520 BL / 13 W | 325 |
| 25.471.4453.0 | 8520 BL / 14 W | 325 |
| 25.471.4553.0 | 8520 BL / 15 W | 325 |
| 25.471.4653.0 | 8520 BL / 16 W | 325 |
| 25.472.0253.0 | | 325 |
| 25.472.0353.0 | 8520 BL / 3 G OB | 325 |
| 25.472.0453.0 | 8520 BL / 4 G OB | 325 |
| 25.472.0553.0 | | 325 |
| 25.472.0653.0 | 8520 BL / 6 G OB | 325 |
| 25.472.0753.0 | 8520 BL / 7 G OB | 325 |
| 25.472.0853.0 | | 325 |
| 25.472.0953.0 | | 325 |
| 25.472.1053.0 | | 325 |
| 25.472.1153.0 | 8520 BL / 11 G OB | 325 |
| 25.472.1253.0 | | 325 |
| 25.472.1353.0 | 8520 BL / 13 G OB | 325 |
| 25.472.1453.0 | 8520 BL / 14 G OB | 325 |
| 25.472.1553.0 | 8520 BL / 15 G OB | 325 |
| 25.472.1653.0 | | 325 |
| 25.472.3253.0 | | 325 |
| 25.472.3353.0 | | 325 |
| 25.472.3453.0 | | 325 |
| 25.472.3553.0 | | 325 |
| 25.472.3653.0 | | 325 |
| 25.472.3753.0 | 8520 BL / 7 G | 325 |
| 25.472.3853.0 | | 325 |
| 25.472.3953.0 | | 325 |
| 25.472.4053.0 | | 325 |
| 25.472.4153.0 | 8520 BL / 11 G | 325 |
| 25.472.4253.0 | | 325 |
| 25.472.4353.0 | 8520 BL / 13 G | 325 |
| 25.472.4453.0 | 8520 BL / 14 G | 325 |
| 25.472.4553.0 | 8520 BL / 15 G | 325 |
| 25.472.4653.0 | 8520 BL / 16 G | 325 |
| 25.500.0253.0 | 8134 / 2 | 360 |
| 25.500.0353.0 | 8134 / 3 | 360 |
| 25.500.0453.0 | 8134 / 4 | 360 |
| 25.500.0553.0 | 8134 / 5 | 360 |
| 25.500.0653.0 | 8134 / 6 | 360 |
| 25.500.0753.0 | 8134 / 7 | 360 |
| 25.500.0853.0 | 8134 / 8 | 360 |
| 25.500.0953.0 | 8134 / 9 | 360 |
| 25.500.1053.0 | 8134 / 10 | 360 |
| 25.500.1153.0 | 8134 / 11 | 360 |
| 25.500.1253.0 | 8134 / 12 | 360 |
| 25.500.1353.0 | 8134 / 13 | 360 |
| 25.500.1453.0 | 134/ 14 | 360 |
| 25.500.1553.0 | 8134 / 15 | 360 |
| 25.500.1653.0 | 8134 / 16 | 360 |
| 25.500.6253.0 | 8134 / 2 ZN | 360 |
| 25.500.6353.0 | 8134 / 3 ZN | 360 |
| 25.501.0253.0 | 8134 / 2 OB | 360 |
| 25.501.0353.0 | 8134 / 3 OB | 360 |
| 25.501.0453.0 | 8134 / 4 OB | 360 |
| 25.501.0553.0 | 8134 / 5 OB | 360 |
| 25.501.0653.0 | 8134 / 6 OB | 360 |
| 25.501.0753.0 | 8134 / 7 OB | 360 |
| 25.501.0853.0 | 8134 / 8 OB | 360 |
| 25.501.0953.0 | 8134 / 9 OB | 360 |
| 25.501.1053.0 | 8134 / 10 OB | 360 |
| 25.501.1153.0 | 8134 / 11 OB | 360 |
| 25.501.1253.0 | 8134 / 12 OB | 360 |
| 25.501.1353.0 | 8134 / 13 OB | 360 |
| 25.501.1453.0 | 8134 / 14 OB | 360 |
| 25.501.1553.0 | 8134 / 15 OB | 360 |
| 25.501.1653.0 | 8134 / 16 OB | 360 |
| 25.501.6253.0 | 8134 / 2 ZN OB | 360 |
| 25.501.6353.0 | 8134 / 3 ZN OB | 360 |
| 25.502.0253.0 | 8234 / 2 | 360 |
| 25.502.0353.0 | 8234 / 3 | 360 |
| 25.502.0453.0 | 8234 / 4 | 360 |
| 25.502.0553.0 | 8234 / 5 | 360 |
| 25.502.0653.0 | 8234 / 6 | 360 |
| 25.502.0753.0 | 8234 / 7 | 360 |
| 25.502.0853.0 | 8234 / 8 | 360 |
| 25.502.0953.0 | 8234 / 9 | 360 |
| 25.502.1053.0 | 8234 / 10 | 360 |
| 25.502.1153.0 | 8234 / 11 | 360 |
| 25.502.1253.0 | 8234 / 12 | 360 |
| 25.502.1353.0 | 8234 / 13 | 360 |
| 25.502.1453.0 | 8234 / 14 | 360 |
| 25.502.1553.0 | 8234 / 15 | 360 |
| 25.502.1653.0 | 8234 / 16 | 360 |
| 25.502.6253.0 | 8234 / 2 ZN | 360 |
| 25.502.6353.0 | 8234 / 3 ZN | 360 |
| 25.503.0253.0 | 8234 / 2 OB | 360 |
| 25.503.0353.0 | 8234 / 3 OB | 360 |
| 25.503.0453.0 | 8234 / 4 OB | 360 |
| 25.503.0553.0 | 8234 / 5 OB | 360 |
| 25.503.0653.0 | 8234 / 6 OB | 360 |
| 25.503.0753.0 | 8234 / 7 OB | 360 |
| 25.503.0853.0 | 8234 / 8 OB | 360 |
| 25.503.0953.0 | 8234 / 9 OB | 360 |
| 25.503.1053.0 | 8234 / 10 OB | 360 |
| 25.503.1153.0 | 8234 / 11 OB | 360 |
| 25.503.1253.0 | 8234 / 12 OB | 360 |
| 25.503.1353.0 | 8234 / 13 OB | 360 |
| 25.503.1453.0 | 8234 / 14 OB | 360 |
| 25.503.1553.0 | 8234 / 15 OB | 360 |
| 25.503.1653.0 | 8234 / 16 OB | 360 |
| 25.503.6253.0 | 8234 / 2 ZN OB | 360 |
| 25.503.6353.0 | 8234 / 3 ZN OB | 360 |
| 25.520.0253.0 | 8135 / 2 | 362 |
| 25.520.0353.0 | 8135 / 3 | 362 |
| 25.520.0453.0 | 8135 / 4 | 362 |
| 25.520.0553.0 | 8135 / 5 | 362 |
| 25.520.0653.0 | 8135 / 6 | 362 |
| 25.520.0753.0 | 8135 / 7 | 362 |
| 25.520.0853.0 | 8135 / 8 | 362 |
| 25.520.0953.0 | 8135 / 9 | 362 |
| 25.520.1053.0 | 8135 / 10 | 362 |
| 25.520.1153.0 | 8135 / 11 | 362 |
| 25.520.1253.0 | 8135 / 12 | 362 |
| 25.520.1353.0 | 8135 / 13 | 362 |
| 25.520.1453.0 | 8135 / 14 | 362 |
| 25.520.1553.0 | 8135 / 15 | 362 |
| 25.520.1653.0 | 8135 / 16 | 362 |
| 25.520.6253.0 | 8135 / 2 ZN | 362 |
| 25.520.6353.0 | 8135 / 3 ZN | 362 |
| 25.521.0253.0 | 8135 / 2 OB | 362 |
| 25.521.0353.0 | 8135 / 3 OB | 362 |
| 25.521.0453.0 | 8135 / 4 OB | 362 |
| 25.521.0553.0 | 8135 / 5 OB | 362 |
| 25.521.0653.0 | 8135 / 6 OB | 362 |
| 25.521.0753.0 | 8135 / 7 OB | 362 |
| 25.521.0853.0 | 8135 / 8 OB | 362 |
| 25.521.0953.0 | 8135 / 9 OB | 362 |
| 25.521.1053.0 | 8135 / 10 OB | 362 |
| 25.521.1153.0 | 8135 / 11 OB | 362 |
| 25.521.1253.0 | 8135 / 12 OB | 362 |
| 25.521.1353.0 | 8135 / 13 OB | 362 |
| 25.521.1453.0 | 8135 / 14 OB | 362 |
| 25.521.1553.0 | 8135 / 15 OB | 362 |
| 25.521.1653.0 | 8135 / 16 OB | 362 |
| 25.521.6253.0 | 8135 / 2 ZN OB | 362 |
| 25.521.6353.0 | 8135 / 3 ZN OB | 362 |
| 25.522.0253.0 | 8235 / 2 | 362 |
| 25.522.0353.0 | 8235 / 3 | 362 |
| 25.522.0453.0 | 8235 / 4 | 362 |
| 25.522.0553.0 | 8235 / 5 | 362 |
| 25.522.0653.0 | 8235 / 6 | 362 |
| 25.522.0753.0 | 8235 / 7 | 362 |
| 25.522.0853.0 | 8235 / 8 | 362 |
| 25.522.0953.0 | 8235 / 9 | 362 |
| 25.522.1053.0 | 8235 / 10 | 362 |
| 25.522.1153.0 | 8235 / 11 | 362 |
| 25.522.1253.0 | 8235 / 12 | 362 |
| 25.522.1353.0 | 8235 / 13 | 362 |
| 25.522.1453.0 | 8235 / 14 | 362 |
| 25.522.1553.0 | 8235 / 15 | 362 |
| 25.522.1653.0 | 8235 / 16 | 362 |
| 25.522.6253.0 | 8235 / 2 ZN | 362 |
| 25.522.6353.0 | 8235 / 3 ZN | 362 |
| 25.523.0253.0 | 8235 / 2 OB | 362 |
| 25.523.0353.0 | 8235 / 3 OB | 362 |
| 25.523.0453.0 | 8235 / 4 OB | 362 |
| 25.523.0553.0 | 8235 / 5 OB | 362 |
| 25.523.0653.0 | 8235 / 6 OB | 362 |
| 25.523.0753.0 | 8235 / 7 OB | 362 |
| 25.523.0853.0 | 8235 / 8 OB | 362 |
| 25.523.0953.0 | 8235 / 9 OB | 362 |
| 25.523.1053.0 | 8235 / 10 OB | 362 |
| 25.523.1153.0 | 8235 / 11 OB | 362 |
| 25.523.1253.0 | 8235 / 12 OB | 362 |
| 25.523.1353.0 | 8235 / 13 OB | 362 |
| 25.523.1453.0 | 8235 / 14 OB | 362 |
| 25.523.1553.0 | 8235 / 15 OB | 362 |
| 25.523.1653.0 | 8235 / 16 OB | 362 |
| 25.523.6253.0 | 8235 / 2 ZN OB | 362 |
| 25.523.6353.0 | 8235 / 3 ZN OB | 362 |
| 25.600.2253.0 | 8142 / 2 | 318 |
| 25.600.2353.0 | 8142 / 3 | 318 |

# contents of part number

# contents PART NUMBER


| Part no. | Type | section / page |
|---|---|---|
| 25.600.2453.0 | 8142 / 4 | 318 |
| 25.600.2553.0 | 8142 / 5 | 318 |
| 25.600.2653.0 | 8142 / 6 | 318 |
| 25.600.2753.0 | 8142 / 7 | 318 |
| 25.600.2853.0 | 8142 / 8 | 318 |
| 25.600.2953.0 | 8142 / 9 | 318 |
| 25.600.3053.0 | 8142 / 10 | 318 |
| 25.600.3153.0 | 8142 / 11 | 318 |
| 25.600.3253.0 | 8142 / 12 | 318 |
| 25.600.3353.0 | 8142 / 13 | 318 |
| 25.600.3453.0 | 8142 / 14 | 318 |
| 25.600.3553.0 | 8142 / 15 | 318 |
| 25.600.3653.0 | 8142 / 16 | 318 |
| 25.600.5253.0 | 8543 / 2 | 316 |
| 25.600.5353.0 | 8543 / 3 | 316 |
| 25.600.5453.0 | 8543 / 4 | 316 |
| 25.600.5553.0 | 8543 / 5 | 316 |
| 25.600.5653.0 | 8543 / 6 | 316 |
| 25.600.5753.0 | 8543 / 7 | 316 |
| 25.600.5853.0 | 8543 / 8 | 316 |
| 25.600.5953.0 | 8543 / 9 | 316 |
| 25.600.6053.0 | 8543 / 10 | 316 |
| 25.600.6153.0 | 8543 / 11 | 316 |
| 25.600.6253.0 | 8543 / 12 | 316 |
| 25.600.6353.0 | 8543 / 13 | 316 |
| 25.600.6453.0 | 8543 / 14 | 316 |
| 25.600.6553.0 | 8543 / 15 | 316 |
| 25.600.6653.0 | 8543 / 16 | 316 |
| 25.601.1253.0 | 8142 / 4 / 2 | 318 |
| 25.601.1353.0 | 8142 / 6 / 3 | 318 |
| 25.601.1453.0 | 8142 / 8 / 4 | 318 |
| 25.601.1553.0 | 8142 / 10 / 5 | 318 |
| 25.601.1653.0 | 8142 / 12 / 6 | 318 |
| 25.601.1753.0 | 8142 / 14 / 7 | 318 |
| 25.601.1853.0 | 8142 / 16 / 8 | 318 |
| 25.602.2253.0 | 8142 / 2 OB | 318 |
| 25.602.2353.0 | 8142 / 3 OB | 318 |
| 25.602.2453.0 | 8142 / 4 OB | 318 |
| 25.602.2553.0 | 8142 / 5 OB | 318 |
| 25.602.2653.0 | 8142 / 6 OB | 318 |
| 25.602.2753.0 | 8142 / 7 OB | 318 |
| 25.602.2853.0 | 8142 / 8 OB | 318 |
| 25.602.2953.0 | 8142 / 9 OB | 318 |
| 25.602.3053.0 | 8142 / 10 OB | 318 |
| 25.602.3153.0 | 8142 / 11 OB | 318 |
| 25.602.3253.0 | 8142 / 12 OB | 318 |
| 25.602.3353.0 | 8142 / 13 OB | 318 |
| 25.602.3453.0 | 8142 / 14 OB | 318 |
| 25.602.3553.0 | 8142 / 15 OB | 318 |
| 25.602.3653.0 | 8142 / 16 OB | 318 |
| 25.602.5253.0 | 8543 / 2 OB | 316 |
| 25.602.5353.0 | 8543 / 3 OB | 316 |
| 25.602.5453.0 | 8543 / 4 OB | 316 |
| 25.602.5553.0 | 8543 / 5 OB | 316 |
| 25.602.5653.0 | 8543 / 6 OB | 316 |
| 25.602.5753.0 | 8543 / 7 OB | 316 |
| 25.602.5853.0 | 8543 / 8 OB | 316 |
| 25.602.5953.0 | 8543 / 9 OB | 316 |
| 25.602.6053.0 | 8543 / 10 OB | 316 |
| 25.602.6153.0 | 8543 / 11 OB | 316 |
| 25.602.6253.0 | 8543 / 12 OB | 316 |
| 25.602.6353.0 | 8543 / 13 OB | 316 |
| 25.602.6453.0 | 8543 / 14 OB | 316 |
| 25.602.6553.0 | 8543 / 15 OB | 316 |
| 25.602.6653.0 | 8543 / 16 OB | 316 |
| 25.603.1253.0 | 8142 / 4 / 2 OB | 318 |
| 25.603.1353.0 | 8142 / 6 / 3 OB | 318 |
| 25.603.1453.0 | 8142 / 8 / 4 OB | 318 |
| 25.603.1553.0 | 8142 / 10 / 5 OB | 318 |
| 25.603.1653.0 | 8142 / 12 / 6 OB | 318 |
| 25.603.1753.0 | 8142 / 14 / 7 OB | 318 |
| 25.603.1853.0 | 8142 / 16 / 8 OB | 318 |
| 25.620.0253.0 | 8813 B / 2 | 280 |
| 25.620.0353.0 | 8813 B / 3 | 280 |
| 25.620.0453.0 | 8813 B / 4 | 280 |
| 25.620.0553.0 | 8813 B / 5 | 280 |
| 25.620.0653.0 | 8813 B / 6 | 280 |
| 25.620.0753.0 | 8813 B / 7 | 280 |
| 25.620.0853.0 | 8813 B / 8 | 280 |
| 25.620.0953.0 | 8813 B / 9 | 280 |
| 25.620.1053.0 | 8813 B / 10 | 280 |
| 25.620.1153.0 | 8813 B / 11 | 280 |
| 25.620.1253.0 | 8813 B / 12 | 280 |
| 25.620.1353.0 | 8813 B / 13 | 280 |
| 25.620.1453.0 | 8813 B / 14 | 280 |
| 25.620.1553.0 | 8813 B / 15 | 280 |
| 25.620.1653.0 | 8813 B / 16 | 280 |
| 25.620.3253.0 | 8813 B / 2 OB | 280 |
| 25.620.3353.0 | 8813 B / 3 OB | 280 |
| 25.620.3453.0 | 8813 B / 4 OB | 280 |
| 25.620.3553.0 | 8813 B / 5 OB | 280 |
| 25.620.3653.0 | 8813 B / 6 OB | 280 |
| 25.620.3753.0 | 8813 B / 7 OB | 280 |
| 25.620.3853.0 | 8813 B / 8 OB | 280 |
| 25.620.3953.0 | 8813 B / 9 OB | 280 |
| 25.620.4053.0 | 8813 B / 10 OB | 280 |
| 25.620.4153.0 | 8813 B / 11 OB | 280 |
| 25.620.4253.0 | 8813 B / 12 OB | 280 |
| 25.620.4353.0 | 8813 B / 13 OB | 280 |
| 25.620.4453.0 | 8813 B / 14 OB | 280 |
| 25.620.4553.0 | 8813 B / 15 OB | 280 |
| 25.620.4653.0 | 8813 B / 16 OB | 280 |
| 25.621.0253.0 | 8813 B / 2 F | 280 |
| 25.621.0353.0 | 8813 B / 3 F | 280 |
| 25.621.0453.0 | 8813 B / 4 F | 280 |
| 25.621.0553.0 | 8813 B / 5 F | 280 |
| 25.621.0653.0 | 8813 B / 6 F | 280 |
| 25.621.0753.0 | 8813 B / 7 F | 280 |
| 25.621.0853.0 | 8813 B / 8 F | 280 |
| 25.621.0953.0 | 8813 B / 9 F | 280 |
| 25.621.1053.0 | 8813 B / 10 F | 280 |
| 25.621.1153.0 | 8813 B / 11 F | 280 |
| 25.621.1253.0 | 8813 B / 12 F | 280 |
| 25.621.1353.0 | 8813 B / 13 F | 280 |
| 25.621.1453.0 | 8813 B / 14 F | 280 |
| 25.621.1553.0 | 8813 B / 15 F | 280 |
| 25.621.1653.0 | 8813 B / 16 F | 280 |
| 25.621.3253.0 | 8813 B / 2 F OB | 280 |
| 25.621.3353.0 | 8813 B / 3 F OB | 280 |
| 25.621.3453.0 | 8813 B / 4 F OB | 280 |
| 25.621.3553.0 | 8813 B / 5 F OB | 280 |
| 25.621.3653.0 | 8813 B / 6 F OB | 280 |
| 25.621.3753.0 | 8813 B / 7 F OB | 280 |
| 25.621.3853.0 | 8813 B / 8 F OB | 280 |
| 25.621.3953.0 | 8813 B / 9 F OB | 280 |
| 25.621.4053.0 | 8813 B / 10 F OB | 280 |
| 25.621.4153.0 | 8813 B / 11 F OB | 280 |
| 25.621.4253.0 | 8813 B / 12 F OB | 280 |
| 25.621.4353.0 | 8813 B / 13 F OB | 280 |
| 25.621.4453.0 | 8813 B / 14 F OB | 280 |
| 25.621.4553.0 | 8813 B / 15 F OB | 280 |
| 25.621.4653.0 | 8813 B / 16 F OB | 280 |
| 25.622.0253.0 | 8813 B / 2 VR | 282 |
| 25.622.0353.0 | 8813 B / 3 VR | 282 |
| 25.622.0453.0 | 8813 B / 4 VR | 282 |
| 25.622.0553.0 | 8813 B/ 5 VR | 282 |
| 25.622.0653.0 | 8813 B / 6 VR | 282 |
| 25.622.0753.0 | 8813 B / 7 VR | 282 |
| 25.622.0853.0 | 8813 B / 8 VR | 282 |
| 25.622.0953.0 | 8813 B / 9 VR | 282 |
| 25.622.1053.0 | 8813 B / 10 VR | 282 |
| 25.622.1153.0 | 8813 B / 11 VR | 282 |
| 25.622.1253.0 | 8813 B / 12 VR | 282 |
| 25.622.1353.0 | 8813 B / 13 VR | 282 |
| 25.622.1453.0 | 8813 B / 14 VR | 282 |
| 25.622.1553.0 | 8813 B / 15 VR | 282 |
| 25.622.1653.0 | 8813 B / 16 VR | 282 |
| 25.622.3253.0 | 8813 B / 2 VR OB | 282 |
| 25.622.3353.0 | 8813 B / 3 VR OB | 282 |
| 25.622.3453.0 | 8813 B / 4 VR OB | 282 |
| 25.622.3553.0 | 8813 B / 5 VR OB | 282 |
| 25.622.3653.0 | 8813 B / 6 VR OB | 282 |
| 25.622.3753.0 | 8813 B / 7 VR OB | 282 |
| 25.622.3853.0 | 8813 B / 8 VR OB | 282 |
| 25.622.3953.0 | 8813 B / 9 VR OB | 282 |
| 25.622.4053.0 | 8813 B / 10 VR OB | 282 |
| 25.622.4153.0 | 8813 B / 11 VR OB | 282 |
| 25.622.4253.0 | 8813 B / 12 VR OB | 282 |
| 25.622.4353.0 | 8813B / 13 VR OB | 282 |
| 25.622.4453.0 | 8813 B / 14 VR OB | 282 |
| 25.622.4553.0 | 8813 B / 15 VR OB | 282 |
| 25.622.4653.0 | 8813 B / 16 VR OB | 282 |
| 25.623.0253.0 | 8813 B / 2 VR F | 283 |
| 25.623.0353.0 | 8813 B / 3 VR F | 283 |
| 25.623.0453.0 | 8813 B / 4 VR F | 283 |
| 25.623.0553.0 | 8813 B / 5 VR F | 283 |
| 25.623.0653.0 | 8813 B / 6 VR F | 283 |
| 25.623.0753.0 | 8813 B / 7 VR F | 283 |
| 25.623.0853.0 | 8813 B / 8 VR F | 283 |
| 25.623.0953.0 | 8813 B / 9 VR F | 283 |
| 25.623.1053.0 | 8813 B / 10 VR F | 283 |
| 25.623.1153.0 | 8813 B / 11 VR F | 283 |
| 25.623.1253.0 | 8813 B / 12 VR F | 283 |
| 25.623.1353.0 | 8813 B / 13 VR F | 283 |
| 25.623.1453.0 | 8813 B / 14 VR F | 283 |
| 25.623.1553.0 | 8813 B / 15 VR F | 283 |
| 25.623.3253.0 | 8813 B / 2 VR F OB | 283 |
| 25.623.3353.0 | 8813 B / 3 VR F OB | 283 |
| 25.623.3453.0 | 8813 B / 4 VR F OB | 283 |
| 25.623.3553.0 | 8813 B / 5 VR F OB | 283 |
| 25.623.3653.0 | 8813 B / 6 VR F OB | 283 |
| 25.623.3753.0 | 8813 B / 7 VR F OB | 283 |
| 25.623.3853.0 | 8813 B / 8 VR F OB | 283 |
| 25.623.3953.0 | 8813 B / 9 VR F OB | 283 |
| 25.623.4053.0 | 8813 B / 10 VR F OB | 283 |
| 25.623.4153.0 | 8813 B / 11 VR F OB | 283 |
| 25.623.4253.0 | 8813 B / 12 VR F OB | 283 |
| 25.623.4353.0 | 8813 B / 13 VR F OB | 283 |
| 25.623.4453.0 | 8813 B / 14 VR F OB | 283 |
| 25.623.4553.0 | 8813 B / 15 VR F OB | 283 |
| 25.623.4653.0 | 8813 B / 16 VR F OB | 283 |
| 25.624.0253.0 | 8813 B / 2 VL | 282 |
| 25.624.0353.0 | 8813 B / 3 VL | 282 |
| 25.624.0453.0 | 8813 B / 4 VL | 282 |
| 25.624.0553.0 | 8813 B / 5 VL | 282 |
| 25.624.0653.0 | 8813 B / 6 VL | 282 |
| 25.624.0753.0 | 8813 B / 7 VL | 282 |
| 25.624.0853.0 | 8813 B / 8 VL | 282 |
| 25.624.0953.0 | 8813 B / 9 VL | 282 |
| 25.624.1053.0 | 8813 B / 10 VL | 282 |
| 25.624.1153.0 | 8813 B / 11 VL | 282 |
| 25.624.1253.0 | 8813 B / 12 VL | 282 |
| 25.624.1353.0 | 8813 B / 13 VL | 282 |
| 25.624.1453.0 | 8813 B / 14 VL | 282 |
| 25.624.1553.0 | 8813 B / 15 VL | 282 |
| 25.624.1653.0 | 8813 B / 16 VL | 282 |
| 25.624.3253.0 | 8813 B / 2 VL OB | 282 |
| 25.624.3353.0 | 8813 B / 3 VL OB | 282 |
| 25.624.3453.0 | 8813 B / 4 VL OB | 282 |
| 25.624.3553.0 | 8813 B / 5 VL OB | 282 |
| 25.624.3653.0 | 8813 B / 6 VL OB | 282 |
| 25.624.3753.0 | 8813 B / 7 VL OB | 282 |
| 25.624.3853.0 | 8813 B / 8 VL OB | 282 |
| 25.624.3953.0 | 8813 B / 9 VL OB | 282 |
| 25.624.4053.0 | 8813 B / 10 VL OB | 282 |
| 25.624.4153.0 | 8813 B / 11 VL OB | 282 |
| 25.624.4253.0 | 8813 B / 12 VL OB | 282 |
| 25.624.4353.0 | 8813 B / 13 VL OB | 282 |
| 25.624.4453.0 | 8813 B / 14 VL OB | 282 |
| 25.624.4553.0 | 8813 B / 15 VL OB | 282 |
| 25.624.4653.0 | 8813 B / 16 VL OB | 282 |
| 25.625.0253.0 | 8813 B / 2 VL F | 283 |
| 25.625.0353.0 | 8813 B / 3 VL F | 283 |
| 25.625.0453.0 | 8813 B / 4 VL F | 283 |
| 25.625.0553.0 | 8813 B / 5 VL F | 283 |
| 25.625.0653.0 | 8813 B / 6 VL F | 283 |
| 25.625.0753.0 | 8813 B / 7 VL F | 283 |
| 25.625.0853.0 | 8813 B / 8 VL F | 283 |
| 25.625.0953.0 | 8813 B / 9 VL F | 283 |
| 25.625.1053.0 | 8813 B / 10 VL F | 283 |
| 25.625.1153.0 | 8813 B / 11 VL F | 283 |
| 25.625.1253.0 | 8813 B / 12 VL F | 283 |
| 25.625.1353.0 | 8813 B / 13 VL F | 283 |
| 25.625.1453.0 | 8813 B / 14 VL F | 283 |
| 25.625.1553.0 | 8813 B / 15 VL F | 283 |
| 25.625.1653.0 | 8813 B / 16 VL F | 283 |
| 25.625.3253.0 | 8813 B / 2 VL F OB | 283 |
| 25.625.3353.0 | 8813 B / 3 VL F OB | 283 |
| 25.625.3453.0 | 8813 B / 4 VL F OB | 283 |
| 25.625.3553.0 | 8813 B / 5 VL F OB | 283 |
| 25.625.3653.0 | 8813 B / 6 VL F OB | 283 |
| 25.625.3753.0 | 8813 B / 7 VL F OB | 283 |
| 25.625.3853.0 | 8813 B / 8 VL F OB | 283 |
| 25.625.3953.0 | 8813 B / 9 VL F OB | 283 |
| 25.625.4053.0 | 8813 B / 10 VL F OB | 283 |
| 25.625.4153.0 | 8813 B / 11 VL F OB | 283 |
| 25.625.4253.0 | 8813 B / 12 VL F OB | 283 |
| 25.625.4353.0 | 8813 B / 13 VL F OB | 283 |
| 25.625.4453.0 | 8813 B / 14 VL F OB | 283 |
| 25.625.4553.0 | 8813 B / 15 VL F OB | 283 |
| 25.625.4653.0 | 8813 B / 16 VL F OB | 283 |
| 25.626.0253.0 | 8813 S / 2 G | 284 |
| 25.626.0353.0 | 8813 S / 3 G | 284 |
| 25.626.0453.0 | 8813 S / 4 G | 284 |
| 25.626.0553.0 | 8813 S / 5 G | 284 |
| 25.626.0653.0 | 8813 S / 6 G | 284 |
| 25.626.0753.0 | 8813 S / 7 G | 284 |
| 25.626.0853.0 | 8813 S / 8 G | 284 |
| 25.626.0953.0 | 8813 S / 9 G | 284 |
| 25.626.1053.0 | 8813 S / 10 G | 284 |
| 25.626.1153.0 | 8813 S / 11 G | 284 |
| 25.626.1253.0 | 8813 S / 12 G | 284 |
| 25.626.1353.0 | 8813 S / 13 G | 284 |
| 25.626.1453.0 | 8813 S / 14 G | 284 |
| 25.626.1553.0 | 8813 S / 15 G | 284 |
| 25.626.1653.0 | 8813 S / 16 G | 284 |
| 25.626.3253.0 | 8813 S / 2 GF | 285 |
| 25.626.3353.0 | 8813 S / 3 GF | 285 |
| 25.626.3453.0 | 8813 S / 4 GF | 285 |
| 25.626.3553.0 | 8813 S / 5 GF | 285 |
| 25.626.3653.0 | 8813 S / 6 GF | 285 |
| 25.626.3753.0 | 8813 S / 7 GF | 285 |
| 25.626.3853.0 | 8813 S / 8 GF | 285 |
| 25.626.3953.0 | 8813 S / 9 GF | 285 |
| 25.626.4053.0 | 8813 S / 10 GF | 285 |
| 25.626.4153.0 | 8813 S / 11 GF | 285 |
| 25.626.4253.0 | 8813 S / 12 GF | 285 |
| 25.626.4353.0 | 8813 S / 13 GF | 285 |
| 25.626.4453.0 | 8813 S / 14 GF | 285 |
| 25.626.4553.0 | 8813 S / 15 GF | 285 |
| 25.626.4653.0 | 8813 S / 16 GF | 285 |
| 25.627.0253.0 | 8813 S / 2 W | 284 |
| 25.627.0353.0 | 8813 S / 3 W | 284 |
| 25.627.0453.0 | 8813 S / 4 W | 284 |
| 25.627.0553.0 | 8813 S / 5 W | 284 |

# contents


| Part no. | Type | section / page |
|---|---|---|
| 25.627.0653.0 | 8813 S / 6 W | 284 |
| 25.627.0753.0 | 8813 S / 7 W | 284 |
| 25.627.0853.0 | 8813 S / 8 W | 284 |
| 25.627.0953.0 | 8813 S / 9 W | 284 |
| 25.627.1053.0 | 8813 S / 10 W | 284 |
| 25.627.1153.0 | 8813 S / 11 W | 284 |
| 25.627.1253.0 | 8813 S / 12 W | 284 |
| 25.627.1353.0 | 8813 S / 13 W | 284 |
| 25.627.1453.0 | 8813 S / 14 W | 284 |
| 25.627.1553.0 | 8813 S / 15 W | 284 |
| 25.627.1653.0 | 8813 S / 16 W | 284 |
| 25.627.3253.0 | 8813 S / 2 WF | 285 |
| 25.627.3353.0 | 8813 S / 3 WF | 285 |
| 25.627.3453.0 | 8813 S / 4 WF | 285 |
| 25.627.3553.0 | 8813 S / 5 WF | 285 |
| 25.627.3653.0 | 8813 S / 6 WF | 285 |
| 25.627.3753.0 | 8813 S / 7 WF | 285 |
| 25.627.3853.0 | 8813 S / 8 WF | 285 |
| 25.627.3953.0 | 8813 S / 9 WF | 285 |
| 25.627.4053.0 | 8813 S / 10 WF | 285 |
| 25.627.4153.0 | 8813 S / 11 WF | 285 |
| 25.627.4253.0 | 8813 S / 12 WF | 285 |
| 25.627.4353.0 | 8813 S / 13 WF | 285 |
| 25.627.4453.0 | 8813 S / 14 WF | 285 |
| 25.627.4553.0 | 8813 S / 15 WF | 285 |
| 25.627.4653.0 | 8813 S / 16 WF | 285 |
| 25.630.0253.0 | 8513 BFK/ 2 TOP | 281 |
| 25.630.0353.0 | 8513 BFK/ 3 TOP | 281 |
| 25.630.0453.0 | 8513 BFK/ 4 TOP | 281 |
| 25.630.0553.0 | 8513 BFK/ 5 TOP | 281 |
| 25.630.0653.0 | 8513 BFK/ 6 TOP | 281 |
| 25.630.0753.0 | 8513 BFK/ 7 TOP | 281 |
| 25.630.0853.0 | 8513 BFK/ 8 TOP | 281 |
| 25.630.0953.0 | 8513 BFK/ 9 TOP | 281 |
| 25.630.1053.0 | 8513 BDK/10 TOP | 281 |
| 25.630.1153.0 | 8513 BFK/11 TOP | 281 |
| 25.630.1253.0 | 8513 BFK/12 TOP | 281 |
| 25.630.1353.0 | 8513 BFK/13 TOP | 281 |
| 25.630.1453.0 | 8513 BFK/14 TOP | 281 |
| 25.630.1553.0 | 8513 BFK/15 TOP | 281 |
| 25.630.1653.0 | 8513 BFK/16 TOP | 281 |
| 25.630.3253.0 | 8513 BFK/ 2 TOP OB | 281 |
| 25.630.3353.0 | 8513 BFK/ 3 TOP OB | 281 |
| 25.630.3453.0 | 8513 BFK/ 4 TOP OB | 281 |
| 25.630.3553.0 | 8513 BFK/ 5 TOP OB | 281 |
| 25.630.3653.0 | 8513 BFK/ 6 TOP OB | 281 |
| 25.630.3753.0 | 8513 BFK/ 7 TOP OB | 281 |
| 25.630.3853.0 | 8513 BFK/ 8 TOP OB | 281 |
| 25.630.3953.0 | 8513 BFK/ 9 TOP OB | 281 |
| 25.630.4053.0 | 8513 BFK/10 TOP OB | 281 |
| 25.630.4153.0 | 8513 BFK/11 TOP OB | 281 |
| 25.630.4253.0 | 8513 BFK/12 TOP OB | 281 |
| 25.630.4353.0 | 8513 BFK/13 TOP OB | 281 |
| 25.630.4453.0 | 8513 BFK/14 TOP OB | 281 |
| 25.630.4553.0 | 8513 BFK/15 TOP OB | 281 |
| 25.630.4653.0 | 8513 BFK/16 TOP OB | 281 |
| 25.640.0253.0 | 8513 B / 2 | 280 |
| 25.640.0353.0 | 8513 B / 3 | 280 |
| 25.640.0453.0 | 8513 B / 4 | 280 |
| 25.640.0553.0 | 8513 B / 5 | 280 |
| 25.640.0653.0 | 8513 B / 6 | 280 |
| 25.640.0753.0 | 8513 B / 7 | 280 |
| 25.640.0853.0 | 8513 B / 8 | 280 |
| 25.640.0953.0 | 8513 B / 9 | 280 |
| 25.640.1053.0 | 8513 B / 10 | 280 |
| 25.640.1153.0 | 8513 B / 11 | 280 |
| 25.640.1253.0 | 8513 B / 12 | 280 |
| 25.640.1353.0 | 8513 B / 13 | 280 |
| 25.640.1453.0 | 8513 B / 14 | 280 |
| 25.640.1553.0 | 8513 B / 15 | 280 |
| 25.640.1653.0 | 8513 B / 16 | 280 |
| 25.640.3253.0 | 8513 B / 2 OB | 280 |
| 25.640.3353.0 | 8513 B / 3 OB | 280 |
| 25.640.3453.0 | 8513 B / 4 OB | 280 |
| 25.640.3553.0 | 8513 B / 5 OB | 280 |
| 25.640.3653.0 | 8513 B / 6 OB | 280 |
| 25.640.3753.0 | 8513 B / 7 OB | 280 |
| 25.640.3853.0 | 8513 B / 8 OB | 280 |
| 25.640.3953.0 | 8513 B / 9 OB | 280 |
| 25.640.4053.0 | 8513 B / 10 OB | 280 |
| 25.640.4153.0 | 8513 B / 11 OB | 280 |
| 25.640.4253.0 | 8513 B / 12 OB | 280 |
| 25.640.4353.0 | 8513 B / 13 OB | 280 |
| 25.640.4453.0 | 8513 B / 14 OB | 280 |
| 25.640.4553.0 | 8513 B / 15 OB | 280 |
| 25.640.4653.0 | 8513 B / 16 OB | 280 |
| 25.641.0253.0 | 8513 B / 2 F | 280 |
| 25.641.0353.0 | 8513 B / 3 F | 280 |
| 25.641.0453.0 | 8513 B / 4 F | 280 |
| 25.641.0553.0 | 8513 B / 5 F | 280 |
| 25.641.0653.0 | 8513 B / 6 F | 280 |
| 25.641.0753.0 | 8513 B / 7 F | 280 |
| 25.641.0853.0 | 8513 B / 8 F | 280 |
| 25.641.0953.0 | 8513 B / 9 F | 280 |
| 25.641.1053.0 | 8513 B / 10 F | 280 |
| 25.641.1153.0 | 8513 B / 11 F | 280 |
| 25.641.1253.0 | 8513 B / 12 F | 280 |
| 25.641.1353.0 | 8513 B / 13 F | 280 |
| 25.641.1453.0 | 8513 B / 14 F | 280 |
| 25.641.1553.0 | 8513 B / 15 F | 280 |
| 25.641.1653.0 | 8513 B / 16 F | 280 |
| 25.641.3253.0 | 8513 B / 2 F OB | 280 |
| 25.641.3353.0 | 8513 B / 3 F OB | 280 |
| 25.641.3453.0 | 8513 B / 4 F OB | 280 |
| 25.641.3553.0 | 8513 B / 5 F OB | 280 |
| 25.641.3653.0 | 8513 B / 6 F OB | 280 |
| 25.641.3753.0 | 8513 B / 7 F OB | 280 |
| 25.641.3853.0 | 8513 B / 8 F OB | 280 |
| 25.641.3953.0 | 8513 B / 9 F OB | 280 |
| 25.641.4053.0 | 8513 B / 10 F OB | 280 |
| 25.641.4153.0 | 8513 B / 11 F OB | 280 |
| 25.641.4253.0 | 8513 B / 12 F OB | 280 |
| 25.641.4353.0 | 8513 B / 13 F OB | 280 |
| 25.641.4453.0 | 8513 B / 14 F OB | 280 |
| 25.641.4553.0 | 8513 B / 15 F OB | 280 |
| 25.641.4653.0 | 8513 B / 16 F OB | 280 |
| 25.642.0253.0 | | 281 |
| 25.642.0353.0 | | 281 |
| 25.642.0453.0 | | 281 |
| 25.642.0553.0 | | 281 |
| 25.642.0653.0 | | 281 |
| 25.642.0753.0 | | 281 |
| 25.642.0853.0 | | 281 |
| 25.642.0953.0 | | 281 |
| 25.642.1053.0 | | 281 |
| 25.642.1153.0 | | 281 |
| 25.642.1253.0 | 8513 SUFK / 12 | 281 |
| 25.642.1353.0 | | 281 |
| 25.642.1453.0 | | 281 |
| 25.642.1553.0 | | 281 |
| 25.642.1653.0 | | 281 |
| 25.642.3253.0 | 8513 SUFK / 2 OB | 281 |
| 25.642.3353.0 | 8513 SUFK / 3 OB | 281 |
| 25.642.3453.0 | 8513 SUFK / 4 OB | 281 |
| 25.642.3553.0 | 8513 SUFK / 5 OB | 281 |
| 25.642.3653.0 | 8513 SUFK / 6 OB | 281 |
| 25.642.3753.0 | 8513 SUFK / 7 OB | 281 |
| 25.642.3853.0 | 8513 SUFK / 8 OB | 281 |
| 25.642.3953.0 | 8513 SUFK / 9 OB | 281 |
| 25.642.4053.0 | 8513 SUFK / 10 OB | 281 |
| 25.642.4153.0 | 8513 SUFK / 11 OB | 281 |
| 25.642.4253.0 | 8513 SUFK / 12 OB | 281 |
| 25.642.4353.0 | | 281 |
| 25.642.4453.0 | | 281 |
| 25.642.4553.0 | | 281 |
| 25.642.4653.0 | | 281 |
| 25.646.0253.0 | 8513 S / 2 G | 284 |
| 25.646.0353.0 | 8513 S / 3 G | 284 |
| 25.646.0453.0 | 8513 S / 4 G | 284 |
| 25.646.0553.0 | 8513 S / 5 G | 284 |
| 25.646.0653.0 | 8513 S / 6 G | 284 |
| 25.646.0753.0 | 8513 S / 7 G | 284 |
| 25.646.0853.0 | 8513 S / 8 G | 284 |
| 25.646.0953.0 | 8513 S / 9 G | 284 |
| 25.646.1053.0 | 8513 S / 10 G | 284 |
| 25.646.1153.0 | 8513 S / 11 G | 284 |
| 25.646.1253.0 | 8513 S / 12 G | 284 |
| 25.646.1353.0 | 8513 S / 13 G | 284 |
| 25.646.1453.0 | 8513 S / 14 G | 284 |
| 25.646.1553.0 | 8513 S / 15 G | 284 |
| 25.646.1653.0 | 8513 S / 16 G | 284 |
| 25.646.3253.0 | 8513 S / 2 G F | 285 |
| 25.646.3353.0 | 8513 S / 3 GF | 285 |
| 25.646.3453.0 | 8513 S / 4 GF | 285 |
| 25.646.3553.0 | 8513 S / 5 GF | 285 |
| 25.646.3653.0 | 8513 S / 6 GF | 285 |
| 25.646.3753.0 | 8513 S / 7 GF | 285 |
| 25.646.3853.0 | 8513 S / 8 GF | 285 |
| 25.646.3953.0 | 8513 S / 9 GF | 285 |
| 25.646.4053.0 | 8513 S / 10 GF | 285 |
| 25.646.4153.0 | 8513 S / 11 GF | 285 |
| 25.646.4253.0 | 8513 S / 12 G F | 285 |
| 25.646.4353.0 | 8513 S / 13 GF | 285 |
| 25.646.4453.0 | 8513 S / 14 GF | 285 |
| 25.646.4553.0 | 8513 S / 15 GF | 285 |
| 25.646.4653.0 | 8513 S / 16 GF | 285 |
| 25.647.0253.0 | 8513 S / 2 W | 284 |
| 25.647.0353.0 | 8513 S / 3 W | 284 |
| 25.647.0453.0 | 8513 S / 4 W | 284 |
| 25.647.0553.0 | 8513 S / 5 W | 284 |
| 25.647.0653.0 | 8513 S / 6 W | 284 |
| 25.647.0753.0 | 8513 S / 7 W | 284 |
| 25.647.0853.0 | 8513 S / 8 W | 284 |
| 25.647.0953.0 | 8513 S / 9 W | 284 |
| 25.647.1053.0 | 8513 S / 10 W | 284 |
| 25.647.1153.0 | 8513 S / 11 W | 284 |
| 25.647.1253.0 | 8513 S / 12 W | 284 |
| 25.647.1353.0 | 513 S / 13 W | 284 |
| 25.647.1453.0 | 8513 S / 14 W | 284 |
| 25.647.1553.0 | 8513 S / 15 W | 284 |
| 25.647.1653.0 | 8513 S / 16 W | 284 |
| 25.647.3253.0 | 8513 S / 2 W F | 285 |
| 25.647.3353.0 | 8513 S / 3 WF | 285 |
| 25.647.3453.0 | 8513 S / 4 WF | 285 |
| 25.647.3553.0 | 8513 S / 5 WF | 285 |
| 25.647.3653.0 | 8513 S / 6 WF | 285 |
| 25.647.3753.0 | 8513 S / 7 WF | 285 |
| 25.647.3853.0 | 8513 S / 8 WF | 285 |
| 25.647.3953.0 | 8513 S / 9 WF | 285 |
| 25.647.4053.0 | 8513 S / 10 WF | 285 |
| 25.647.4153.0 | 8513 S / 11 WF | 285 |
| 25.647.4253.0 | 8513 S / 12 W F | 285 |
| 25.647.4353.0 | 8513 S / 13 WF | 285 |
| 25.647.4453.0 | 8513 S / 14 WF | 285 |
| 25.647.4553.0 | 8513 S / 15 WF | 285 |
| 25.647.4653.0 | 8513 S / 16 WF | 285 |
| 25.700.0153.0 | 8375/ 1/ 7,5 | 374 |
| 25.720.1353.0 | 8276 | 378 |
| 25.720.1453.0 | 8276 TKS | 378 |
| 25.741.0053.0 | 8185/ 1 TOP V | 349 |
| 25.741.0153.0 | 8185/ 1 TOP H | 350 |
| 25.741.0253.0 | 8185/ 2 TOP V | 349 |
| 25.741.0353.0 | 8185/ 3 TOP V | 349 |
| 25.741.0453.0 | 8185/ 4 TOP V | 349 |
| 25.741.0553.0 | 8185/ 5 TOP V | 349 |
| 25.741.0653.0 | 8185/ 6 TOP V | 349 |
| 25.741.0753.0 | 8185/ 7 TOP V | 349 |
| 25.741.0853.0 | 8185/ 8 TOP V | 349 |
| 25.741.0953.0 | 8185/ 9 TOP V | 349 |
| 25.741.1053.0 | 8185/ 10 TOP V | 349 |
| 25.741.1153.0 | 8185/ 11 TOP V | 349 |
| 25.741.1253.0 | 8185/ 12 TOP V | 349 |
| 25.741.1353.0 | 8185 TOP V | 349 |
| 25.741.1453.0 | 8185/ 14 TOP V | 349 |
| 25.741.1553.0 | 8185 TOP V | 349 |
| 25.741.1653.0 | 8185/ 16 TOP V | 349 |
| 25.741.3253.0 | 8185/ 2 TOP H | 350 |
| 25.741.3353.0 | 8185/ 3 TOP H | 350 |
| 25.741.3453.0 | 8185/ 4 TOP H | 350 |
| 25.741.3553.0 | 8185/ 5 TOP H | 350 |
| 25.741.3653.0 | 8185/ 6 TOP H | 350 |
| 25.741.3753.0 | 8185/ 7 TOP H | 350 |
| 25.741.3853.0 | 8185/ 8 TOP H | 350 |
| 25.741.3953.0 | 8185 TOP H | 350 |
| 25.741.4053.0 | 8185/ 10 TOP H | 350 |
| 25.741.4153.0 | 8185 TOP H | 350 |
| 25.741.4253.0 | 8185/ 12 TOP H | 350 |
| 25.741.4353.0 | 8185 TOP H | 350 |
| 25.741.4453.0 | 8185 TOP H | 350 |
| 25.741.4553.0 | 8185 TOP H | 350 |
| 25.741.4653.0 | 8185/ 16 TOP H | 350 |
| 25.751.0053.0 | 8285/ 1 TOP V | 349 |
| 25.751.0153.0 | 8285/ 1 TOP H | 350 |
| 25.751.0253.0 | 8285/ 2 TOP V | 349 |
| 25.751.0353.0 | 8285/ 3 TOP V | 349 |
| 25.751.0453.0 | 8285/ 4 TOP V | 349 |
| 25.751.0553.0 | 8285/ 5 TOP V | 349 |
| 25.751.0653.0 | 8285/ 6 TOP V | 349 |
| 25.751.0753.0 | 8285 TOP V | 349 |
| 25.751.0853.0 | 8285/ 8 TOP V | 349 |
| 25.751.0953.0 | 8285 TOP V | 349 |
| 25.751.1053.0 | 8285/ 10 TOP V | 349 |
| 25.751.1153.0 | 8285 TOP V | 349 |
| 25.751.1253.0 | 8285/ 12 TOP V | 349 |
| 25.751.1353.0 | 8285 TOP V | 349 |
| 25.751.1453.0 | 8285 TOP V | 349 |
| 25.751.1553.0 | 8285/ 15 TOP V | 349 |
| 25.751.1653.0 | 8285 TOP V | 349 |
| 25.751.3253.0 | 8285/ 2 TOP H | 350 |
| 25.751.3353.0 | 8285/ 3 TOP H | 350 |
| 25.751.3453.0 | 8285/ 4 TOP H | 350 |
| 25.751.3553.0 | 8285/ 5 TOP H | 350 |
| 25.751.3653.0 | 8285/ 6 TOP H | 350 |
| 25.751.3753.0 | 8285 TOP H | 350 |
| 25.751.3853.0 | 8285 TOP H | 350 |
| 25.751.3953.0 | 8285 TOP H | 350 |
| 25.751.4053.0 | 8285/ 10 TOP H | 350 |
| 25.751.4153.0 | 8285 TOP H | 350 |
| 25.751.4253.0 | 8285 TOP H | 350 |
| 25.751.4353.0 | 8285 TOP H | 350 |
| 25.751.4453.0 | 8285 TOP H | 350 |
| 25.751.4553.0 | 8285 TOP H | 350 |
| 25.751.4653.0 | 8285/ 16 TOP H | 350 |
| 25.761.0053.0 | 8385/ 1 TOP V | 351 |
| 25.761.0153.0 | 8385/ 1 TOP H | 352 |
| 25.761.0253.0 | 8385/ 2 TOP V | 351 |
| 25.761.0353.0 | 8385/ 3 TOP V | 351 |
| 25.761.0453.0 | 8385 TOP V | 351 |
| 25.761.0553.0 | 8385 TOP V | 351 |
| 25.761.0653.0 | 8385/ 6 TOP V | 351 |
| 25.761.0753.0 | 8385 TOP V | 351 |
| 25.761.0853.0 | 8385 TOP V | 351 |
| 25.761.3253.0 | 8385 TOP H | 352 |
| 25.761.3353.0 | 8385/ 3 TOP H | 352 |
| 25.761.3453.0 | 8385 TOP H | 352 |

# contents of part number

# contents PART NUMBER


| Part no. | Type | section / page |
|---|---|---|
| 25.761.3553.0 | 8385 TOP H | 352 |
| 25.761.3653.0 | 8385 TOP H | 352 |
| 25.761.3753.0 | 8385 TOP H | 352 |
| 25.761.3853.0 | 8385 TOP H | 352 |
| 25.771.0053.0 | 8485/ 1 TOP V | 351 |
| 25.771.0153.0 | 8485/ 1 TOP H | 352 |
| 25.771.0253.0 | 8485/ 2 TOP V | 351 |
| 25.771.0353.0 | 8485/ 3 TOP V | 351 |
| 25.771.0453.0 | 8485/ 4 TOP V | 351 |
| 25.771.0553.0 | 8485/ 5 TOP V | 351 |
| 25.771.0653.0 | 8485 TOP V | 351 |
| 25.771.0753.0 | 8485 TOP V | 351 |
| 25.771.0853.0 | 8485 TOP V | 351 |
| 25.771.3253.0 | 8485/ 2 TOP H | 352 |
| 25.771.3353.0 | 8485/ 3 TOP H | 352 |
| 25.771.3453.0 | 8485 TOP H | 352 |
| 25.771.3553.0 | 8485 TOP H | 352 |
| 25.771.3653.0 | 8485/ 6 TOP H | 352 |
| 25.771.3753.0 | 8485 TOP H | 352 |
| 25.771.3853.0 | 8485 TOP H | 352 |
| 25.780.0253.0 | 8158 / 2 TOP V OB | 353 |
| 25.780.0353.0 | 8158 / 3 TOP V OB | 353 |
| 25.780.0453.0 | 8158 / 4 TOP V OB | 353 |
| 25.780.0553.0 | 8158 / 5 TOP V OB | 353 |
| 25.780.0653.0 | 8158 / 6 TOP V OB | 353 |
| 25.780.0753.0 | 8158 / 7 TOP V OB | 353 |
| 25.780.0853.0 | 8158 / 8 TOP V OB | 353 |
| 25.780.0953.0 | 8158 / 9 TOP V OB | 353 |
| 25.780.1053.0 | 8158 / 10 TOP V OB | 353 |
| 25.780.1153.0 | 8158 / 11 TOP V OB | 353 |
| 25.780.1253.0 | 8158 / 12 TOP V OB | 353 |
| 25.780.1353.0 | 8158 / 13 TOP V OB | 353 |
| 25.780.1453.0 | 8158 / 14 TOP V OB | 353 |
| 25.780.1553.0 | 8158 / 15 TOP V OB | 353 |
| 25.780.1653.0 | 8158 / 16 TOP V OB | 353 |
| 25.781.0253.0 | 8258 / 2 TOP V OB | 353 |
| 25.781.0353.0 | 8258 / 3 TOP V OB | 353 |
| 25.781.0453.0 | 8258 / 4 TOP V OB | 353 |
| 25.781.0553.0 | 8258 / 5 TOP V OB | 353 |
| 25.781.0653.0 | 8258 / 6 TOP V OB | 353 |
| 25.781.0753.0 | 8258 / 7 TOP V OB | 353 |
| 25.781.0853.0 | 8258 / 8 TOP V OB | 353 |
| 25.781.0953.0 | 8258 / 9 TOP V OB | 353 |
| 25.781.1053.0 | 8258 / 10 TOP V OB | 353 |
| 25.781.1153.0 | 8258 / 11 TOP V OB | 353 |
| 25.781.1253.0 | 8258 / 12 TOP V OB | 353 |
| 25.781.1353.0 | 8258 / 13 TOP V OB | 353 |
| 25.781.1453.0 | 8258 / 14 TOP V OB | 353 |
| 25.781.1553.0 | 8258 / 15 TOP V OB | 353 |
| 25.781.1653.0 | 8258 / 16 TOP V OB | 353 |
| 25.782.0253.0 | 8358 / 2 TOP V OB | 354 |
| 25.782.0353.0 | 8358 / 3 TOP V OB | 354 |
| 25.782.0453.0 | 8358 / 4 TOP V OB | 354 |
| 25.782.0553.0 | 8358 / 5 TOP V OB | 354 |
| 25.782.0653.0 | 8358 / 6 TOP V OB | 354 |
| 25.782.0753.0 | 8358 / 7 TOP V OB | 354 |
| 25.782.0853.0 | 8358 / 8 TOP V OB | 354 |
| 25.782.0953.0 | 8358 / 9 TOP V OB | 354 |
| 25.782.1053.0 | 8358 / 10 TOP V OB | 354 |
| 25.782.1153.0 | 8358 / 11 TOP V OB | 354 |
| 25.782.1253.0 | 8358 / 12 TOP V OB | 354 |
| 25.782.1353.0 | 8358 / 13 TOP V OB | 354 |
| 25.782.1453.0 | 8358 / 14 TOP V OB | 354 |
| 25.782.1553.0 | 8358 / 15 TOP V OB | 354 |
| 25.782.1653.0 | 8358 / 16 TOP V OB | 354 |
| 25.783.0253.0 | 8458 / 2 TOP V OB | 354 |
| 25.783.0353.0 | 8458 / 3 TOP V OB | 354 |
| 25.783.0453.0 | 8458 / 4 TOP V OB | 354 |
| 25.783.0553.0 | 8458 / 5 TOP V OB | 354 |
| 25.783.0653.0 | 8458 / 6 TOP V OB | 354 |
| 25.783.0753.0 | 8458 / 7 TOP V OB | 354 |
| 25.783.0853.0 | 8458 / 8 TOP V OB | 354 |
| 25.783.0953.0 | 8458 / 9 TOP V OB | 354 |
| 25.783.1053.0 | 8458 / 10 TOP V OB | 354 |
| 25.783.1153.0 | 8458 / 11 TOP V OB | 354 |
| 25.783.1253.0 | 8458 / 12 TOP V OB | 354 |
| 25.783.1353.0 | 8458 / 13 TOP V OB | 354 |
| 25.783.1453.0 | 8458 / 14 TOP V OB | 354 |
| 25.783.1553.0 | 8458 / 15 TOP V OB | 354 |
| 25.783.1653.0 | 8458 / 16 TOP V OB | 354 |
| 25.790.0253.0 | 8158 / 2 TOP H OB | 353 |
| 25.790.0353.0 | 8158 / 3 TOP H OB | 353 |
| 25.790.0453.0 | 8158 / 4 TOP H OB | 353 |
| 25.790.0553.0 | 8158 / 5 TOP H OB | 353 |
| 25.790.0653.0 | 8158 / 6 TOP H OB | 353 |
| 25.790.0753.0 | 8158 / 7 TOP H OB | 353 |
| 25.790.0853.0 | 8158 / 8 TOP H OB | 353 |
| 25.790.0953.0 | 8158 / 9 TOP H OB | 353 |
| 25.790.1053.0 | 8158 / 10 TOP H OB | 353 |
| 25.790.1153.0 | 8158 / 11 TOP H OB | 353 |
| 25.790.1253.0 | 8158 / 12 TOP H OB | 353 |
| 25.790.1353.0 | 8158 / 13 TOP H OB | 353 |
| 25.790.1453.0 | 8158 / 14 TOP H OB | 353 |
| 25.790.1553.0 | 8158 / 15 TOP H OB | 353 |
| 25.790.1653.0 | 8158 / 16 TOP H OB | 353 |
| 25.791.0253.0 | 8258 / 2 TOP H OB | 353 |
| 25.791.0353.0 | 8258 / 3 TOP H OB | 353 |
| 25.791.0453.0 | 8258 / 4 TOP H OB | 353 |
| 25.791.0553.0 | 8258 / 5 TOP H OB | 353 |
| 25.791.0653.0 | 8258 / 6 TOP H OB | 353 |
| 25.791.0753.0 | 8258 / 7 TOP H OB | 353 |
| 25.791.0853.0 | 8258 / 8 TOP H OB | 353 |
| 25.791.0953.0 | 8258 / 9 TOP H OB | 353 |
| 25.791.1053.0 | 8258 / 10 TOP H OB | 353 |
| 25.791.1153.0 | 8258 / 11 TOP H OB | 353 |
| 25.791.1253.0 | 8258 / 12 TOP H OB | 353 |
| 25.791.1353.0 | 8258 / 13 TOP H OB | 353 |
| 25.791.1453.0 | 8258 / 14 TOP H OB | 353 |
| 25.791.1553.0 | 8258 / 15 TOP H OB | 353 |
| 25.791.1653.0 | 8258 / 16 TOP H OB | 353 |
| 25.792.0253.0 | 8358 / 2 TOP H OB | 354 |
| 25.792.0353.0 | 8358 / 3 TOP H OB | 354 |
| 25.792.0453.0 | 8358 / 4 TOP H OB | 354 |
| 25.792.0553.0 | 8358 / 5 TOP H OB | 354 |
| 25.792.0653.0 | 8358 / 6 TOP H OB | 354 |
| 25.792.0753.0 | 8358 / 7 TOP H OB | 354 |
| 25.792.0853.0 | 8358 / 8 TOP H OB | 354 |
| 25.792.0953.0 | 8358 / 9 TOP H OB | 354 |
| 25.792.1053.0 | 8358 / 10 TOP H OB | 354 |
| 25.792.1153.0 | 8358 / 11 TOP H OB | 354 |
| 25.792.1253.0 | 8358 / 12 TOP H OB | 354 |
| 25.792.1353.0 | 8358 / 13 TOP H OB | 354 |
| 25.792.1453.0 | 8358 / 14 TOP H OB | 354 |
| 25.792.1553.0 | 8358 / 15 TOP H OB | 354 |
| 25.792.1653.0 | 8358 / 16 TOP H OB | 354 |
| 25.793.0253.0 | 8458 / 2 TOP H OB | 354 |
| 25.793.0353.0 | 8458 / 3 TOP H OB | 354 |
| 25.793.0453.0 | 8458 / 4 TOP H OB | 354 |
| 25.793.0553.0 | 8458 / 5 TOP H OB | 354 |
| 25.793.0653.0 | 8458 / 6 TOP H OB | 354 |
| 25.793.0753.0 | 8458 / 7 TOP H OB | 354 |
| 25.793.0853.0 | 8458 / 8 TOP H OB | 354 |
| 25.793.0953.0 | 8458 / 9 TOP H OB | 354 |
| 25.793.1053.0 | 8458 / 10 TOP H OB | 354 |
| 25.793.1153.0 | 8458 / 11 TOP H OB | 354 |
| 25.793.1253.0 | 8458 / 12 TOP H OB | 354 |
| 25.793.1353.0 | 8458 / 13 TOP H OB | 354 |
| 25.793.1453.0 | 8458 / 14 TOP H OB | 354 |
| 25.793.1553.0 | 8458 / 15 TOP H OB | 354 |
| 25.793.1653.0 | 8458 / 16 TOP H OB | 354 |
| 25.820.0253.0 | 8113 BFK / 2 TOP K | 37 |
| 25.820.0253.0 | 8113 BFK / 2 TOP K | 292 |
| 25.820.0353.0 | 8113 BFK / 3 TOP K | 292 |
| 25.820.0453.0 | 8113 BFK / 4 TOP K | 37 |
| 25.820.0453.0 | 8113 BFK / 4 TOP K | 292 |
| 25.820.0553.0 | 8113 BFK / 5 TOP K | 37 |
| 25.820.0553.0 | 8113 BFK / 5 TOP K | 292 |
| 25.820.0653.0 | 8113 BFK / 6 TOP K | 37 |
| 25.820.0653.0 | 8113 BFK / 6 TOP K | 292 |
| 25.820.0753.0 | 8113 BFK / 7 TOP K | 37 |
| 25.820.0753.0 | 8113 BFK / 7 TOP K | 292 |
| 25.820.0853.0 | 8113 BFK / 8 TOP K | 37 |
| 25.820.0853.0 | 8113 BFK / 8 TOP K | 292 |
| 25.820.0953.0 | 8113 BFK / 9 TOP K | 37 |
| 25.820.0953.0 | 8113 BFK / 9 TOP K | 292 |
| 25.820.1053.0 | 8113 BFK /10 TOP K | 37 |
| 25.820.1053.0 | 8113 BFK /10 TOP K | 292 |
| 25.820.1153.0 | 8113 BFK /11 TOP K | 37 |
| 25.820.1153.0 | 8113 BFK /11 TOP K | 292 |
| 25.820.1253.0 | 8113 BFK /12 TOP K | 37 |
| 25.820.1253.0 | 8113 BFK /12 TOP K | 292 |
| 25.820.1353.0 | 8113 BFK /13 TOP K | 37 |
| 25.820.1353.0 | 8113 BFK /13 TOP K | 292 |
| 25.820.1453.0 | 8113 BFK /14 TOP K | 37 |
| 25.820.1453.0 | 8113 BFK /14 TOP K | 292 |
| 25.820.1553.0 | 8113 BFK /15 TOP K | 37 |
| 25.820.1553.0 | 8113 BFK /15 TOP K | 292 |
| 25.820.1653.0 | 8113 BFK /16 TOP K | 37 |
| 25.820.1653.0 | 8113 BFK /16 TOP K | 292 |
| 25.820.3253.0 | 8113 BFK / 2 TOP K OB | 37 |
| 25.820.3253.0 | 8113 BFK / 2 TOP K OB | 292 |
| 25.820.3353.0 | 8113 BFK / 3 TOP K OB | 37 |
| 25.820.3353.0 | 8113 BFK / 3 TOP K OB | 292 |
| 25.820.3453.0 | 8113 BFK / 4 TOP K OB | 37 |
| 25.820.3453.0 | 8113 BFK / 4 TOP K OB | 292 |
| 25.820.3553.0 | 8113 BFK / 5 TOP K OB | 37 |
| 25.820.3553.0 | 8113 BFK / 5 TOP K OB | 292 |
| 25.820.3653.0 | 8113 BFK / 6 TOP K OB | 37 |
| 25.820.3653.0 | 8113 BFK / 6 TOP K OB | 292 |
| 25.820.3753.0 | 8113 BFK / 7 TOP K OB | 37 |
| 25.820.3753.0 | 8113 BFK / 7 TOP K OB | 292 |
| 25.820.3853.0 | 8113 BFK / 8 TOP K OB | 37 |
| 25.820.3853.0 | 8113 BFK / 8 TOP K OB | 292 |
| 25.820.3953.0 | 8113 BFK / 9 TOP K OB | 37 |
| 25.820.3953.0 | 8113 BFK / 9 TOP K OB | 292 |
| 25.820.4053.0 | 8113 BFK /10 TOP K OB | 37 |
| 25.820.4053.0 | 8113 BFK /10 TOP K OB | 292 |
| 25.820.4153.0 | 8113 BFK /11 TOP K OB | 37 |
| 25.820.4153.0 | 8113 BFK /11 TOP K OB | 292 |
| 25.820.4253.0 | 8113 BFK /12 TOP K OB | 37 |
| 25.820.4253.0 | 8113 BFK /12 TOP K OB | 292 |
| 25.820.4353.0 | 8113 BFK /13 TOP K OB | 37 |
| 25.820.4353.0 | 8113 BFK /13 TOP K OB | 292 |
| 25.820.4453.0 | 8113 BFK /14 TOP K OB | 37 |
| 25.820.4453.0 | 8113 BFK /14 TOP K OB | 292 |
| 25.820.4553.0 | 8113 BFK /15 TOP K OB | 37 |
| 25.820.4553.0 | 8113 BFK /15 TOP K OB | 292 |
| 25.820.4653.0 | 8113 BFK /16 TOP K OB | 37 |
| 25.820.4653.0 | 8113 BFK /16 TOP K OB | 292 |
| 25.821.0253.0 | | 292 |
| 25.821.0353.0 | | 292 |
| 25.821.0453.0 | | 292 |
| 25.821.0553.0 | | 292 |
| 25.821.0653.0 | | 292 |
| 25.821.0753.0 | | 292 |
| 25.821.0853.0 | | 292 |
| 25.821.0953.0 | | 292 |
| 25.821.1053.0 | | 292 |
| 25.821.1153.0 | | 292 |
| 25.821.1253.0 | | 292 |
| 25.821.1353.0 | | 292 |
| 25.821.1453.0 | | 292 |
| 25.821.1553.0 | | 292 |
| 25.821.1653.0 | | 292 |
| 25.821.3253.0 | | 292 |
| 25.821.3353.0 | | 292 |
| 25.821.3453.0 | 8113 BFK / 4 TOP K F OB | 292 |
| 25.821.3553.0 | | 292 |
| 25.821.3653.0 | | 292 |
| 25.821.3753.0 | | 292 |
| 25.821.3853.0 | | 292 |
| 25.821.3953.0 | | 292 |
| 25.821.4053.0 | | 292 |
| 25.821.4153.0 | | 292 |
| 25.821.4253.0 | | 292 |
| 25.821.4353.0 | | 292 |
| 25.821.4453.0 | | 292 |
| 25.821.4553.0 | | 292 |
| 25.821.4653.0 | | 292 |
| 25.840.0253.0 | 8213 BFK / 2 TOP K | 292 |
| 25.840.0353.0 | 8213 BFK / 3 TOP K | 292 |
| 25.840.0453.0 | 8213 BFK / 4 TOP K | 292 |
| 25.840.0553.0 | 8213 BFK / 5 TOP K | 292 |
| 25.840.0653.0 | 8213 BFK / 6 TOP K | 292 |
| 25.840.0753.0 | 8213 BFK / 7 TOP K | 292 |
| 25.840.0853.0 | 8213 BFK / 8 TOP K | 292 |
| 25.840.0953.0 | 8213 BFK / 9 TOP K | 292 |
| 25.840.1053.0 | 8213 BFK /10 TOP K | 292 |
| 25.840.1153.0 | 8213 BFK /11 TOP K | 292 |
| 25.840.1253.0 | 8213 BFK /12 TOP K | 292 |
| 25.840.1353.0 | 8213 BFK /13 TOP K | 292 |
| 25.840.1453.0 | 8213 BFK /14 TOP K | 292 |
| 25.840.1553.0 | 8213 BFK /15 TOP K | 292 |
| 25.840.1653.0 | 8213 BFK /16 TOP K | 292 |
| 25.840.3253.0 | 8213 BFK / 2 TOP K OB | 292 |
| 25.840.3353.0 | 8213 BFK / 3 TOP K OB | 292 |
| 25.840.3453.0 | 13 BFK / 4 TOP K OB | 292 |
| 25.840.3553.0 | 8213 BFK / 5 TOP K OB | 292 |
| 25.840.3653.0 | 8213 BFK / 6 TOP K OB | 292 |
| 25.840.3753.0 | 8213 BFK / 7 TOP K OB | 292 |
| 25.840.3853.0 | 8213 BFK / 8 TOP K OB | 292 |
| 25.840.3953.0 | 8213 BFK / 9 TOP K OB | 292 |
| 25.840.4053.0 | 8213 BFK /10 TOP K OB | 292 |
| 25.840.4153.0 | 8213 BFK /11 TOP K OB | 292 |
| 25.840.4253.0 | 8213 BFK /12 TOP K OB | 292 |
| 25.840.4353.0 | 8213 BFK /13 TOP K OB | 292 |
| 25.840.4453.0 | 8213 BFK /14 TOP K OB | 292 |
| 25.840.4553.0 | 8213 BFK /15 TOP K OB | 292 |
| 25.840.4653.0 | 8213 BFK /16 TOP K OB | 292 |
| 25.841.0253.0 | | 292 |
| 25.841.0353.0 | | 292 |
| 25.841.0453.0 | | 292 |
| 25.841.0553.0 | | 292 |
| 25.841.0653.0 | | 292 |
| 25.841.0753.0 | | 292 |
| 25.841.0853.0 | | 292 |
| 25.841.0953.0 | | 292 |
| 25.841.1053.0 | | 292 |
| 25.841.1153.0 | | 292 |
| 25.841.1253.0 | 8213 BFK/12 TOP K F | 292 |
| 25.841.1353.0 | | 292 |
| 25.841.1453.0 | | 292 |
| 25.841.1553.0 | | 292 |
| 25.841.1653.0 | | 292 |
| 25.841.3253.0 | | 292 |
| 25.841.3353.0 | | 292 |
| 25.841.3453.0 | | 292 |
| 25.841.3553.0 | | 292 |
| 25.841.3653.0 | | 292 |
| 25.841.3753.0 | | 292 |
| 25.841.3853.0 | | 292 |
| 25.841.3953.0 | | 292 |
| 25.841.4053.0 | | 292 |
| 25.841.4153.0 | | 292 |
| 25.841.4253.0 | | 292 |

# contents


| Part no. | Type | section / page |
|---|---|---|
| 25.841.4353.0 | | 292 |
| 25.841.4453.0 | | 292 |
| 25.841.4553.0 | | 292 |
| 25.841.4653.0 | | 292 |
| 25.857.0253.0 | 8213 SUFK/ 2 TOP | 293 |
| 25.857.0353.0 | 8213 SUFK/ 3 TOP | 293 |
| 25.857.0453.0 | 8213 SUFK/ 4 TOP | 293 |
| 25.857.0553.0 | 8213 SUFK/ 5 TOP | 293 |
| 25.857.0653.0 | 8213 SUFK/ 6 TOP | 293 |
| 25.857.0753.0 | 8213 SUFK/ 7 TOP | 293 |
| 25.857.0853.0 | 8213 SUFK/ 8 TOP | 293 |
| 25.857.0953.0 | 8213 SUFK/ 9 TOP | 293 |
| 25.857.1053.0 | 8213 SUFK/10 TOP | 293 |
| 25.857.1153.0 | 8213 SUFK/11 TOP | 293 |
| 25.857.1253.0 | 8213 SUFK/12 TOP | 293 |
| 25.857.1353.0 | 8213 SUFK/13 TOP | 293 |
| 25.857.1453.0 | 8213 SUFK/14 TOP | 293 |
| 25.857.1553.0 | 8213 SUFK/15 TOP | 293 |
| 25.857.1653.0 | 8213 SUFK/16 TOP | 293 |
| 25.857.3253.0 | 8213 SUFK/ 2 TOP OB | 293 |
| 25.857.3353.0 | 8213 SUFK/ 3 TOP OB | 293 |
| 25.857.3453.0 | 8213 SUFK/ 4 TOP OB | 293 |
| 25.857.3553.0 | 8213 SUFK/ 5 TOP OB | 293 |
| 25.857.3653.0 | 8213 SUFK/ 6 TOP OB | 293 |
| 25.857.3753.0 | 8213 SUFK/ 7 TOP OB | 293 |
| 25.857.3853.0 | 8213 SUFK/ 8 TOP OB | 293 |
| 25.857.3953.0 | 8213 SUFK/ 9 TOP OB | 293 |
| 25.857.4053.0 | 8213 SUFK/10 TOP OB | 293 |
| 25.857.4153.0 | 8213 SUFK/11 TOP OB | 293 |
| 25.857.4253.0 | 8213 SUFK/12 TOP OB | 293 |
| 25.857.4353.0 | 8213 SUFK/13 TOP OB | 293 |
| 25.857.4453.0 | 8213 SUFK/14 TOP OB | 293 |
| 25.857.4553.0 | 8213 SUFK/15 TOP OB | 293 |
| 25.857.4653.0 | 8213 SUFK/16 TOP OB | 293 |
| 25.880.0253.0 | 8413 BFK / 2 TOP K | 294 |
| 25.880.0353.0 | 8413 BFK / 3 TOP K | 294 |
| 25.880.0453.0 | 8413 BFK / 4 TOP K | 294 |
| 25.880.0553.0 | 8413 BFK / 5 TOP K | 294 |
| 25.880.0653.0 | 8413 BFK / 6 TOP K | 294 |
| 25.880.0753.0 | 8413 BFK / 7 TOP K | 294 |
| 25.880.0853.0 | 8413 BFK / 8 TOP K | 294 |
| 25.880.0953.0 | 8413 BFK / 9 TOP K | 294 |
| 25.880.1053.0 | 8413 BFK /10 TOP K | 294 |
| 25.880.1153.0 | 8413 BFK /11 TOP K | 294 |
| 25.880.1253.0 | 8413 BFK /12 TOP K | 294 |
| 25.880.3253.0 | 8413 BFK / 2 TOP K OB | 294 |
| 25.880.3353.0 | 8413 BFK / 3 TOP K OB | 294 |
| 25.880.3453.0 | 8413 BFK / 4 TOP K OB | 294 |
| 25.880.3553.0 | 8413 BFK / 5 TOP K OB | 294 |
| 25.880.3653.0 | 8413 BFK / 6 TOP K OB | 294 |
| 25.880.3753.0 | 8413 BFK / 7 TOP K OB | 294 |
| 25.880.3853.0 | 8413 BFK / 8 TOP K OB | 294 |
| 25.880.3953.0 | 8413 BFK / 9 TOP K OB | 294 |
| 25.880.4053.0 | 8413 BFK /10 TOP K OB | 294 |
| 25.880.4153.0 | 8413 BFK /11 TOP K OB | 294 |
| 25.880.4253.0 | 8413 BFK /12 TOP K OB | 294 |
| 25.881.0253.0 | 8413 BFK / 2 TOP K F | 294 |
| 25.881.0353.0 | 8413 BFK / 3 TOP K F | 294 |
| 25.881.0453.0 | 8413 BFK / 4 TOP K F | 294 |
| 25.881.0553.0 | 8413 BFK / 5 TOP K F | 294 |
| 25.881.0653.0 | 8413 BFK / 6 TOP K F | 294 |
| 25.881.0753.0 | 8413 BFK / 7 TOP K F | 294 |
| 25.881.0853.0 | 8413 BFK / 8 TOP K F | 294 |
| 25.881.0953.0 | 8413 BFK / 9 TOP K F | 294 |
| 25.881.1053.0 | 8413 BFK /10 TOP K F | 294 |
| 25.881.1153.0 | 8413 BFK /11 TOP K F | 294 |
| 25.881.1253.0 | 8413 BFK /12 TOP K F | 294 |
| 25.881.3253.0 | 8413 BFK / 2 TOP K F OB | 294 |
| 25.881.3353.0 | 8413 BFK / 3 TOP K F OB | 294 |
| 25.881.3453.0 | 8413 BFK / 4 TOP K F OB | 294 |
| 25.881.3553.0 | 8413 BFK / 5 TOP K F OB | 294 |
| 25.881.3653.0 | 8413 BFK / 6 TOP K F OB | 294 |
| 25.881.3753.0 | 8413 BFK / 7 TOP K F OB | 294 |
| 25.881.3853.0 | 8413 BFK / 8 TOP K F OB | 294 |
| 25.881.3953.0 | 8413 BFK / 9 TOP K F OB | 294 |
| 25.881.4053.0 | 8413 BFK /10 TOP K F OB | 294 |
| 25.881.4153.0 | 8413 BFK /11 TOP K F OB | 294 |
| 25.881.4253.0 | 8413 BFK /12 TOP K F OB | 294 |
| 26.500.2053.0 | RV2 S/6 | 206 |
| 26.500.2153.0 | RV2 S/3 L | 206 |
| 26.500.2253.0 | RV2 S/3 TP1 | 207 |
| 26.500.2353.0 | RV2 S/4 BLAU | 206 |
| 26.500.2453.0 | RV2 S/2 L BLAU | 206 |
| 26.500.2553.0 | RV2 S/2 TP1 BLAU | 207 |
| 26.500.4053.0 | RV2 A/6 | 208 |
| 26.500.4153.0 | RV2 A/3 L | 208 |
| 26.500.4253.0 | RV2 A/3 TP1 | 209 |
| 26.500.4353.0 | RV2 A/4 BLAU | 208 |
| 26.500.4453.0 | RV A/2 L BLAU | 208 |
| 26.500.4553.0 | RV2 A/2 TP1 BLAU | 209 |
| 27.000.0253.0 | 8292 H / 2 OB | 341 |
| 27.000.0353.0 | 8292 H / 3 OB | 341 |
| 27.000.2253.0 | 8292 EH / 2 OB | 340 |
| 27.000.2353.0 | 8292 EH / 3 OB | 340 |
| 27.000.4253.0 | 8292 DH / 2 OB | 340 |

| Part no. | Type | section / page |
|---|---|---|
| 27.000.4353.0 | 8292 DH / 3 OB | 340 |
| 27.002.0253.0 | 7572 L4 / 2 OB | 376 |
| 27.002.0353.0 | 7572 L4 / 3 OB | 376 |
| 27.002.2253.0 | 7572 L2 / 2 OB | 376 |
| 27.002.2353.0 | 7572 L2 / 3 OB | 376 |
| 27.002.4253.0 | 7572 L2 / 3 / 2 OB | 377 |
| 27.002.4353.0 | 7572 L2 / 5 / 3 OB | 377 |
| 27.002.6153.0 | | 375 |
| 27.002.6353.0 | 7573 L2 / 3 W OB | 375 |
| 27.002.6453.0 | 7573 L2 / 4 W OB | 375 |
| 27.334.0253.0 | | 304 |
| 27.334.0353.0 | | 304 |
| 27.334.0453.0 | | 304 |
| 27.334.0553.0 | 8113 SEG/ 5/10 G OB | 304 |
| 27.334.0653.0 | | 304 |
| 27.334.0753.0 | | 304 |
| 27.334.0853.0 | | 304 |
| 27.334.0953.0 | | 304 |
| 27.334.1053.0 | 8113 SEG/10/20 G OB | 304 |
| 27.334.1153.0 | | 304 |
| 27.334.1253.0 | | 304 |
| 27.334.1353.0 | | 304 |
| 27.334.1453.0 | | 304 |
| 27.334.1553.0 | | 304 |
| 27.334.1653.0 | | 304 |
| 27.336.0253.0 | | 304 |
| 27.336.0353.0 | | 304 |
| 27.336.0453.0 | | 304 |
| 27.336.0553.0 | 8113 SEG/ 5/10 W OB | 304 |
| 27.336.0653.0 | | 304 |
| 27.336.0753.0 | | 304 |
| 27.336.0853.0 | | 304 |
| 27.336.0953.0 | | 304 |
| 27.336.1053.0 | 8113 SEG/10/20 W OB | 304 |
| 27.336.1153.0 | | 304 |
| 27.336.1253.0 | | 304 |
| 27.336.1353.0 | | 304 |
| 27.336.1453.0 | | 304 |
| 27.336.1553.0 | | 304 |
| 27.336.1653.0 | | 304 |
| 27.341.3253.0 | | 287 |
| 27.341.3353.0 | | 287 |
| 27.341.3453.0 | | 287 |
| 27.341.3553.0 | 8213 B / 5 S OB | 287 |
| 27.341.3653.0 | | 287 |
| 27.341.3753.0 | | 287 |
| 27.341.3853.0 | | 287 |
| 27.341.3953.0 | | 287 |
| 27.341.4053.0 | 8213 B / 10 S OB | 287 |
| 27.341.4153.0 | | 287 |
| 27.341.4253.0 | | 287 |
| 27.341.4353.0 | | 287 |
| 27.341.4453.0 | | 287 |
| 27.341.4553.0 | | 287 |
| 27.341.4653.0 | | 287 |
| 27.354.0253.0 | | 304 |
| 27.354.0353.0 | | 304 |
| 27.354.0453.0 | | 304 |
| 27.354.0553.0 | 8213 SEG/ 5/10 G OB | 304 |
| 27.354.0653.0 | | 304 |
| 27.354.0753.0 | | 304 |
| 27.354.0853.0 | | 304 |
| 27.354.0953.0 | | 304 |
| 27.354.1053.0 | 8213 SEG/10/20 G OB | 304 |
| 27.354.1153.0 | | 304 |
| 27.354.1253.0 | | 304 |
| 27.354.1353.0 | | 304 |
| 27.354.1453.0 | | 304 |
| 27.354.1553.0 | | 304 |
| 27.354.1653.0 | | 304 |
| 27.356.0253.0 | | 304 |
| 27.356.0353.0 | | 304 |
| 27.356.0453.0 | | 304 |
| 27.356.0553.0 | 8213 SEG/ 5/10 W OB | 304 |
| 27.356.0653.0 | | 304 |
| 27.356.0753.0 | | 304 |
| 27.356.0853.0 | | 304 |
| 27.356.0953.0 | | 304 |
| 27.356.1053.0 | 8213 SEG/10/20 W OB | 304 |
| 27.356.1153.0 | | 304 |
| 27.356.1253.0 | | 304 |
| 27.356.1353.0 | | 304 |
| 27.356.1453.0 | | 304 |
| 27.356.1553.0 | | 304 |
| 27.356.1653.0 | | 304 |
| 27.703.0253.0 | | 356 |
| 27.703.0353.0 | 8486 / 3 TOP V OB | 356 |
| 27.703.0453.0 | 8486 / 4 TOP V OB | 356 |
| 27.713.0253.0 | | 356 |
| 27.713.0353.0 | 8486 / 3 TOP H OB | 356 |
| 27.713.0453.0 | 8486 / 4 TOP H OB | 356 |
| 27.714.0253.0 | | 355 |
| 27.714.0353.0 | 7386 / 3 TOP H OB | 355 |
| 27.714.0453.0 | | 355 |
| 27.714.0553.0 | | 355 |

| Part no. | Type | section / page |
|---|---|---|
| 27.714.0653.0 | 7386 / 6 TOP H OB | 355 |
| 27.714.0753.0 | | 355 |
| 27.714.0853.0 | | 355 |
| 27.720.0153.0 | | 348 |
| 27.720.0253.0 | | 348 |
| 27.720.0353.0 | | 348 |
| 27.720.0453.0 | | 348 |
| 27.720.0553.0 | 8152 / 5 TOP V OB | 348 |
| 27.720.0653.0 | | 348 |
| 27.720.0753.0 | | 348 |
| 27.720.0853.0 | | 348 |
| 27.720.0953.0 | | 348 |
| 27.720.1053.0 | 8152 / 10 TOP V OB | 348 |
| 27.730.0153.0 | | 348 |
| 27.730.0253.0 | | 348 |
| 27.730.0353.0 | | 348 |
| 27.730.0453.0 | | 348 |
| 27.730.0553.0 | 8152 / 5 TOP H OB | 348 |
| 27.730.0653.0 | | 348 |
| 27.730.0753.0 | | 348 |
| 27.730.0853.0 | | 348 |
| 27.730.0953.0 | | 348 |
| 27.730.1053.0 | 8152 / 10 TOP H OB | 348 |
| 28.121.0240.0 | KBD 1 / 2 KR | 266 |
| 28.121.0340.0 | KBD 1 / 3 KR | 266 |
| 28.121.0440.0 | KBD 1 / 4 KR | 266 |
| 28.121.0540.0 | KBD 1 / 5 KR | 266 |
| 28.121.0640.0 | KBD 1 / 6 KR | 266 |
| 28.121.0740.0 | | 266 |
| 28.121.0840.0 | KBD 1 / 8 KR | 266 |
| 28.121.1040.0 | KBD 1 /10 KR | 266 |
| 28.121.1240.0 | KBD 1 /12 KR | 266 |
| 29.130.1353.0 | KL 58 / 3 / 1 | 268 |
| 29.130.1553.0 | KL 58 / 5 / 1 | 268 |
| 29.130.1653.0 | KL 58 / 6 / 1 | 268 |
| 29.130.2353.0 | | 268 |
| 29.130.2553.0 | | 268 |
| 29.130.2653.0 | | 268 |
| 29.131.1353.0 | KL 58 / 3 S / 1 | 269 |
| 29.131.1553.0 | KL 58 / 5 S / 1 | 269 |
| 29.131.1653.0 | KL 58 / 6 S / 1 | 269 |
| 29.131.2353.0 | KL 58 / 3 S R / 1 | 269 |
| 29.131.2553.0 | KL 58 / 5 S R / 1 | 269 |
| 29.131.2653.0 | KL 58 / 6 S R / 1 | 269 |
| 29.400.0453.0 | KL 16 / 4 PA | 256 |
| 29.400.0653.0 | KL 16 / 6 PA | 256 |
| 29.400.0853.0 | KL 16 / 8 PA | 256 |
| 29.400.1253.0 | KL 16 / 12 PA | 256 |
| 29.400.1653.0 | KL 16 / 16 PA | 256 |
| 29.400.2053.0 | KL 16 / 20 PA | 256 |
| 29.401.0453.0 | KL 16 / 4 PA DS | 256 |
| 29.401.0653.0 | KL 16 / 6 PA DS | 256 |
| 29.401.0853.0 | KL 16 / 8 PA DS | 256 |
| 29.401.1253.0 | KL 16 / 12 PA DS | 256 |
| 29.401.1653.0 | KL 16 / 16 PA DS | 256 |
| 29.401.2053.0 | KL 16 / 20 PA DS | 256 |
| 29.500.0253.0 | KL 20 / 2 PA | 264 |
| 29.500.0353.0 | KL 20 / 4 PA | 264 |
| 29.500.1253.0 | KL 20 / 2 DS PA | 264 |
| 29.500.1353.0 | KL 20 / 4 DS PA | 264 |
| 29.500.3053.0 | KL 30 / 3 PA | 265 |
| 29.500.4053.0 | KL 30 / 3 DS PA | 265 |
| 29.500.9253.0 | KL 24 / 2 | 265 |
| 29.500.9353.0 | KL 24 / 3 | 265 |
| 29.500.9453.0 | KL 24 / 4 | 265 |
| 29.500.9553.0 | KL 24 / 5 | 265 |
| 29.502.9353.0 | KL 24 / 3 SL | 265 |
| 29.502.9553.0 | KL 24 / 5 SL | 265 |
| 29.608.0153.0 | KL17 N/ 1 /S6,3 | 267 |
| 29.608.0253.0 | KL17 N/ 2 /S6,3 | 267 |
| 29.608.0353.0 | KL17 N/ 3 /S6,3 | 267 |
| 29.608.0453.0 | KL17 N/ 4 /S6,3 | 267 |
| 29.608.0553.0 | KL17 N/ 5 S6,3 | 267 |
| 29.608.0653.0 | KL17 N/ 6 /S6,3 | 267 |
| 29.608.0753.0 | KL17 N/ 7 /S6,3 | 267 |
| 29.608.0853.0 | KL17 N/ 8 /S6,3 | 267 |
| 29.608.0953.0 | KL17 N/ 9 /S6,3 | 267 |
| 29.608.1053.0 | KL17 N/10 /S6,3 | 267 |
| 29.608.1153.0 | KL17 N/11 /S6,3 | 267 |
| 29.608.1253.0 | KL17 N/12 /S6,3 | 267 |
| 29.608.1353.0 | KL17 N/13 /S6,3 | 267 |
| 29.608.1453.0 | KL17 N/14 /S6,3 | 267 |
| 29.608.1553.0 | KL17N/15 /S6,3 | 267 |
| 29.608.1653.0 | KL17 N/16 /S6,3 | 267 |
| 29.608.1753.0 | KL17 N/17 /S6,3 | 267 |
| 29.608.1853.0 | KL17 N/18 /S6,3 | 267 |
| 29.608.1953.0 | KL17 N/19 /S6,3 | 267 |
| 29.608.2053.0 | KL17 N/20 /S6,3 | 267 |
| 29.608.2153.0 | KL17 N/21 /S6,3 | 267 |
| 29.608.2253.0 | KL17 N/22 /S6,3 | 267 |
| 29.608.2353.0 | KL17 N/23 /S6,3 | 267 |
| 29.608.2453.0 | KL17 N/24 /S6,3 | 267 |
| 29.608.3153.0 | KL17 N/ 1 K/S6,3 | 267 |
| 29.608.3253.0 | KL17 N/ 2 K/S6,3 | 267 |
| 29.608.3353.0 | KL17 N/ 3 K/S6,3 | 267 |

# contents of part number

# contents PART NUMBER


| Part no. | Type | section / page |
|---|---|---|
| 29.608.3453.0 | KL17 N/ 4 K/S6,3 | 267 |
| 29.608.3553.0 | KL17 N/ 5 K/S6,3 | 267 |
| 29.608.3653.0 | KL17 N/ 6 K/S6,3 | 267 |
| 29.608.3753.0 | KL17 N/ 7 K/S6,3 | 267 |
| 29.608.3853.0 | KL17 N/ 8 K/S6,3 | 267 |
| 29.608.3953.0 | KL17 N/ 9 K/S6,3 | 267 |
| 29.608.4053.0 | KL17 N/10 K/S6,3 | 267 |
| 29.608.4153.0 | KL17 N/11 K/S6,3 | 267 |
| 29.608.4253.0 | KL17 N/12 K/S6,3 | 267 |
| 29.608.4353.0 | KL17 N/13 K/S6,3 | 267 |
| 29.608.4453.0 | KL17 N/14 K/S6,3 | 267 |
| 29.608.4553.0 | KL17 N/15 K/S6,3 | 267 |
| 29.608.4653.0 | KL17 N/16 K/S6,3 | 267 |
| 29.608.4753.0 | | 267 |
| 29.608.4853.0 | | 267 |
| 29.608.4953.0 | | 267 |
| 29.608.5053.0 | KL17 N/20 K/S6,3 | 267 |
| 29.608.5153.0 | | 267 |
| 29.608.5253.0 | | 267 |
| 29.608.5353.0 | | 267 |
| 29.608.5453.0 | | 267 |
| 30.400.0675.0 | 1038 A | 263 |
| 30.400.1075.0 | 1038 B | 263 |
| 30.400.1675.0 | 1038 C | 263 |
| 30.401.0475.0 | 1038 A DS | 263 |
| 30.401.0675.0 | 1038 B DS | 263 |
| 30.401.1075.0 | 1038 C DS | 263 |
| 30.494.0010.0 | WAK4/1 | 216 |
| 30.494.0010.6 | WAK4/1 BL | 216 |
| 30.494.0010.7 | WAK4/1 GN | 216 |
| 30.494.0110.0 | WAK4/3 | 216 |
| 30.494.0110.6 | WAK4/3 BL | 216 |
| 30.494.0110.7 | WAK4/3 GN | 216 |
| 30.494.1010.0 | WAK16/1 | 216 |
| 30.494.1010.6 | WAK16/1 BL | 216 |
| 30.494.1010.7 | WAK16/1 GN | 216 |
| 30.494.1110.0 | WAK25/3 | 216 |
| 30.494.1110.6 | WAK25/3 BL | 193 |
| 30.494.1110.7 | WAK25/3 GN | 216 |
| 30.494.2510.0 | WAK35/3 | 216 |
| 30.494.2510.6 | WAK35/3 BL | 193 |
| 30.494.2510.7 | WAK35/3 GN | 216 |
| 30.494.3021.0 | | 80 |
| 30.494.3021.6 | WAK16/2 BL/V0 | 24 |
| 30.494.4021.6 | WAK35/2 BL/V0 | 107 |
| 30.494.4121.0 | WAK35/2 BLANK | 24 |
| 30.494.4121.6 | | 81 |
| 30.494.4210.0 | | 213 |
| 32.530.0053.0 | | 154 |
| 32.540.0053.0 | | 154 |
| 32.550.0053.0 | | 155 |
| 32.560.0053.0 | | 155 |
| 32.630.0042.0 | BK M 6 / 32 | 152 |
| 32.640.0042.0 | BK M 8 / 32 | 152 |
| 32.650.0042.0 | BK M 10 / 32 | 153 |
| 33.011.0653.0 | KL 28 / 6 DS PA | 214 |
| 33.041.0653.0 | KL 29 / 6 DS PA | 214 |
| 37.702.7453.0 | WKF 1.5 KOI 3L | 44 |
| 37.702.7553.0 | WKF 1.5 KOI 3L/SL | 44 |
| 37.702.7653.0 | WKF 1.5 KOA 2L/SL | 45 |
| 37.702.7753.0 | WKF 1.5 KOE | 45 |
| 37.702.8453.0 | WKF 1.5 KOI 3L-PGE | 44 |
| 37.702.8553.0 | WKF 1.5 KOI 3L/SL-PGE | 44 |
| 37.702.8653.0 | WKF 1.5 KOA 2L/SL-PGE | 45 |
| 37.702.8753.0 | WKF 1.5 KOE-PGN | 45 |
| 54.003.7553.0 | 9700 A / 5 S35 | 189 |
| 54.003.7553.6 | 9700 A / 5 S35 BLAU | 189 |
| 54.004.7553.0 | 9700 A / 6 S35 | 189 |
| 54.004.7553.6 | 9700 A / 6 S35 BLAU | 190 |
| 54.004.7753.0 | 9700 A / 6 ETK S35 | 189 |
| 54.010.7553.0 | 9700 A / 8 S35 | 189 |
| 54.010.7553.6 | 9700 A / 8 S35 BLAU | 191 |
| 54.010.7753.0 | 9700 A / 8 ETK S35 | 189 |
| 54.016.7553.0 | 9700 A / 10 S35 | 189 |
| 54.016.7553.6 | 9700 A / 10 S35 BLAU | 191 |
| 54.016.7753.0 | 9700 A / 10 ETK S35 | 189 |
| 54.025.7553.0 | 9700 A / 12 S35 | 191 |
| 54.025.7553.6 | 9700 A / 12 S35 BLAU | 191 |
| 54.035.7553.0 | 9700 A / 16 S35 | 189 |
| 54.035.7553.6 | 9700 A / 16 S35 BLAU | 189 |
| 54.904.4055.0 | 9700 B/30 SI E14/S32/V0 | 129 |
| 54.925.4055.0 | 9700 B/30 SI E18/S32/V0 | 129 |
| 55.503.1053.0 | WKM 2,5 / 15/V0 | 145 |
| 55.503.1053.6 | WKM 2,5 / 15 BLAU/V0 | 145 |
| 55.503.1253.0 | WKM 2,5 F1 / 15/V0 | 144 |
| 55.503.1353.0 | WKM 2,5 F2 / 15/V0 | 144 |
| 55.504.1053.0 | WKM 4 / 15/V0 | 145 |
| 55.504.1053.6 | WKM 4 / 15 BLAU/V0 | 145 |
| 55.504.9153.0 | WKM 4 SL / 15/V0 | 145 |
| 55.703.0053.0 | | 40 |
| 55.703.0053.6 | | 40 |
| 55.703.9053.0 | | 40 |
| 56.004.9053.0 | 9700 A / 6 SL 2 S35 | 189 |
| 56.010.9053.0 | 9700 A / 8 SL 2 S35 | 189 |
| 56.016.9053.0 | 9700 A / 10 SL 2 S35 | 189 |
| 56.035.9053.0 | 9700 A / 16 SL 2 S35 | 189 |
| 56.035.9453.0 | 9700 A / 16 PEN2 S35 | 195 |
| 56.106.0053.0 | | 149 |
| 56.106.0553.0 | | 148 |
| 56.106.0653.0 | | 148 |
| 56.301.0053.0 | WKC 1 /35 | 231 |
| 56.301.0053.6 | WKC 1 /35 BLAU | 231 |
| 56.301.2053.0 | WKC 1 TKM/35 | 231 |
| 56.301.2053.6 | WKC 1 TKM/35 BLAU | 240 |
| 56.301.4053.0 | WKC 1 TKG/35 | 231 |
| 56.301.5053.0 | WKC 1 D1/2/35 | 231 |
| 56.301.5053.6 | WKC 1 D1/2/35 BLAU | 234 |
| 56.301.5153.0 | WKC 1 D2/2/35 | 231 |
| 56.301.5153.6 | WKC 1 D2/2/35 BLAU | 236 |
| 56.301.7053.0 | WKC 1 E/35 | 231 |
| 56.301.7053.6 | | 238 |
| 56.301.9053.0 | WKC 1 SL/35 | 231 |
| 56.301.9153.0 | WKC 1 /D2/2/SL/35 | 237 |
| 56.301.9353.0 | WKC 1 D1/2/SL/35 | 235 |
| 56.303.0053.0 | WKC 2,5 /35 | 231 |
| 56.303.0053.6 | WKC 2,5 /35 BLAU | 231 |
| 56.303.2053.0 | WKC 2,5 TKM/35 | 231 |
| 56.303.2053.6 | WKC 2,5 TKM/35 BLAU | 240 |
| 56.303.4053.0 | WKC 2,5 TKG/35 | 231 |
| 56.303.5053.0 | WKC 2,5 D1/2/35 | 231 |
| 56.303.5053.6 | WKC 2,5 D1/2/35 BLAU | 234 |
| 56.303.5153.0 | WKC 2,5 D2/2/35 | 231 |
| 56.303.5153.6 | WKC 2,5 D2/2/35 BLAU | 236 |
| 56.303.7053.0 | WKC 2,5 E/35 | 231 |
| 56.303.7053.6 | | 238 |
| 56.303.7153.5 | WKC 2,5 E/35/1D/2G ROT | 239 |
| 56.303.7153.9 | WKC2,5E/35/1D/2G ORANGE | 239 |
| 56.303.7253.5 | | 239 |
| 56.303.7353.5 | | 239 |
| 56.303.7453.9 | | 239 |
| 56.303.7553.5 | WKC 2,5 E/35 ROT | 239 |
| 56.303.7553.9 | WKC 2,5 E/35 ORANGE | 239 |
| 56.303.7953.5 | WKC 2,5 E/35 G2 | 239 |
| 56.303.8053.9 | | 239 |
| 56.303.8253.5 | WKC 2,5 E/35 GO | 239 |
| 56.303.8353.5 | WKC 2,5 E/35 G-URL | 239 |
| 56.303.9053.0 | WKC 2,5 SL/35 | 231 |
| 56.303.9153.0 | WKC 2,5 D2/2/SL/35 | 231 |
| 56.303.9353.0 | WKC 2,5 D1/2/SL/35 | 235 |
| 56.303.xx53.5 | | 239 |
| 56.303.xx53.9 | | 239 |
| 56.351.0153.0 | | 246 |
| 56.351.0153.6 | | 246 |
| 56.351.9053.0 | | 247 |
| 56.353.0153.0 | | 246 |
| 56.353.0153.6 | | 246 |
| 56.353.9053.0 | | 247 |
| 56.395.0055.0 | RFK 1 / 95 F S35/V0 | 156 |
| 56.395.0155.0 | RFK 1 / 95 K S35/V0 | 156 |
| 56.395.0255.0 | RFK 1 / 95 FK S35/V0 | 156 |
| 56.395.1055.0 | RFK 1 / 95 FM S35/V0 | 156 |
| 56.395.1255.0 | RFK 1 / 95 FMK S35/V0 | 156 |
| 56.397.0155.0 | | 157 |
| 56.397.0255.0 | | 157 |
| 56.397.1255.0 | RFK 1 / 150 FMK S35/V0 | 157 |
| 56.398.0055.0 | RFK 1 / 185 F S35/V0 | 158 |
| 56.398.1055.0 | RFK 1 / 185 FM S35/V0 | 158 |
| 56.399.0055.0 | RFK 1 / 240 F S35/V0 | 159 |
| 56.399.0155.0 | RFK 1 / 240 K S35/V0 | 159 |
| 56.399.0255.0 | RFK 1 / 240 FK S35/V0 | 159 |
| 56.399.1055.0 | RFK 1 / 240 FM S35/V0 | 159 |
| 56.399.1255.0 | RFK 1 / 240 FMK S35/V0 | 159 |
| 56.404.8855.0 | WKI 4 TKG-D-SL /V0 | 74 |
| 56.404.9155.0 | WKI 4 NTN-D-SL /V0 | 74 |
| 56.404.9255.0 | WKI 4 NT -D-SL GL/V0 | 73 |
| 56.404.9455.0 | WKI 4 N-D-SL /V0 | 69 |
| 56.404.9555.0 | WKI 4 NT -D-SL /V0 | 69 |
| 56.404.9655.0 | WKI 4 DU /V0 | 72 |
| 56.404.9755.0 | WKI 4 D-D /V0 | 69 |
| 56.404.9855.0 | WKI 4 D-D-SL /V0 | 69 |
| 56.503.7355.0 | WK 2,5-4 KI SL /V0 | 119 |
| 56.503.7455.0 | WK 2,5-4 KI SL-NGN /V0 | 119 |
| 56.503.7555.0 | WK 2,5-4 KI SL-PGN /V0 | 119 |
| 56.503.7655.0 | WK 2,5-4 KI SL-PRT /V0 | 119 |
| 56.503.8355.0 | WK 2,5-3 D SL /V0 | 119 |
| 56.503.8455.0 | WK 2,5-3 D SL-NGN /V0 | 119 |
| 56.503.8555.0 | WK 2,5-3 D SL-PGN /V0 | 119 |
| 56.510.9255.0 | WKI 10 SL / 35/V0 | 82 |
| 56.510.9455.0 | WKI 10 PEN/35/V0 | 84 |
| 56.516.9255.0 | WKI 16 SL / 35/V0 | 69 |
| 56.516.9455.0 | WKI 16 PEN/35/V0 | 84 |
| 56.535.9255.0 | WKI 35 SL / 35/V0 | 83 |
| 56.535.9455.0 | WKI 35 PEN/35/V0 | 85 |
| 56.702.2053.0 | WKF 1,5E/8113/35 | 37 |
| 56.702.2053.0 | WKF 1,5E/8113/35 | 309 |
| 56.702.7053.0 | WKF 1,5 E / 35 | 33 |
| 56.703.0053.0 | WKF 2,5 / 35 | 19 |
| 56.703.0053.6 | WKF 2,5 / 35 BLAU | 19 |
| 56.703.2053.0 | WKF 2,5/D2 35/8113 | 36 |
| 56.703.2053.0 | WKF 2,5/D2 35/8113 | 308 |
| 56.703.2053.6 | WKF 2,5/D2/ 35/8113 BL | 36 |
| 56.703.2053.6 | WKF 2,5/D2/ 35/8113 BL | 308 |
| 56.703.5053.0 | WKF 2,5/D1/2/35 | 19 |
| 56.703.5053.6 | WKF 2,5/D1/2/35 BLAU | 19 |
| 56.703.5153.0 | WKF 2,5/D2/2/35 | 19 |
| 56.703.5153.6 | WKF 2,5/D2/2/35 BLAU | 19 |
| 56.703.5253.0 | WKF 2,5 / D / D / 35 | 27 |
| 56.703.9053.0 | WKF 2,5 SL / 35 | 19 |
| 56.703.9153.0 | WKF 2,5 / D 2/2 / SL/35 | 19 |
| 56.703.9253.0 | WKF 2,5 / D2/SL35/8113 | 36 |
| 56.703.9253.0 | WKF 2,5 / D2/SL35/8113 | 308 |
| 56.703.9353.0 | WKF 2,5 / D 1/2 /SL/35 | 28 |
| 56.703.9453.0 | WKIF 2,5 N-D-SL | 55 |
| 56.703.9553.0 | WKIF 2,5 NT-D-SL | 55 |
| 56.703.9653.0 | WKIF 2,5 D | 58 |
| 56.703.9753.0 | WKIF 2,5 D-D | 55 |
| 56.703.9853.0 | WKIF 2,5 D-D-SL | 55 |
| 56.704.0053.0 | WKF 4 / 35 | 19 |
| 56.704.0053.6 | WKF 4 / 35 BLAU | 19 |
| 56.704.2053.0 | WKF 4 TKM / 35 | 39 |
| 56.704.4053.0 | WKF 4 TKG / 35 | 38 |
| 56.704.5053.0 | WKF 4/D1/2/35 | 27 |
| 56.704.5053.6 | WKF 4/D1/2/35 BLAU | 27 |
| 56.704.6953.1 | ETAGENKLEMME | 30 |
| 56.704.7053.0 | WKF 4 E/35 | 30 |
| 56.704.7153.5 | | 32 |
| 56.704.7153.9 | | 32 |
| 56.704.7253.5 | | 32 |
| 56.704.7353.5 | | 32 |
| 56.704.7453.9 | | 32 |
| 56.704.7553.5 | | 32 |
| 56.704.7553.9 | | 32 |
| 56.704.7953.5 | | 32 |
| 56.704.8053.9 | | 32 |
| 56.704.8153.0 | WKF 4 NT / 35 | 24 |
| 56.704.8253.5 | | 32 |
| 56.704.8353.5 | | 32 |
| 56.704.9053.0 | WKF 4 SL / 35/V0 | 19 |
| 56.704.9253.0 | WKF 4 E/SL/35 | 31 |
| 56.704.9353.0 | WKF 4/D1/2/SL/35 | 29 |
| 56.704.9953.0 | | 31 |
| 56.704.XX53.5 | | 32 |
| 56.704.XX53.9 | | 32 |
| 56.706.0053.0 | WKF 6/35 | 21 |
| 56.706.0053.6 | WKF 6/35 BLAU | 21 |
| 56.706.9053.0 | WKF 6SL/35 | 23 |
| 56.710.0053.0 | WKF 10/35 | 21 |
| 56.710.0053.6 | WKF 10/35 BLAU | 21 |
| 56.710.9053.0 | WKF 10SL/35 | 23 |
| 56.716.0053.0 | WKF 16/35 | 21 |
| 56.716.0053.6 | WKF 16/35 BLAU | 21 |
| 56.716.1153.0 | WKIF 16/35 GRAU | 25 |
| 56.716.1153.6 | WKIF 16/35 BLAU | 25 |
| 56.716.8153.0 | WKIF 16 NT/35 | 25 |
| 56.716.9053.0 | WKF 16SL/35 | 23 |
| 56.716.9153.0 | WKIF 16 SL/35 | 25 |
| 56.904.4055.0 | 9700 B/30 SI E14/S35/V0 | 128 |
| 56.925.4055.0 | 9700 B/30 SI E18/S35/V0 | 128 |
| 57.007.0053.0 | SSW-V.24//TTY | 553 |
| 57.007.0153.0 | SSW-V.24//RS422 | 553 |
| 57.007.0253.0 | SSW-V.24//RS485 | 554 |
| 57.110.1555.0 | 9760 U/8 TKE 220 V/V0 | 133 |
| 57.110.1655.0 | 9760 U/8 TKE 48 V/V0 | 133 |
| 57.403.6955.1 | WKN2,5E / U VB SW/V0 | 116 |
| 57.403.7055.0 | WKN2,5E / U V0 | 116 |
| 57.404.6255.9 | WK 4 E/U LED+PO 24LD/V0 | 115 |
| 57.404.6955.1 | WK 4E/UVB SW/V0 | 114 |
| 57.404.7055.0 | WK 4E/U /V0 | 114 |
| 57.404.7255.5 | WK 4 E/U LD +P O 24/V0 | 115 |
| 57.404.7455.9 | WK 4 E/U LD -P O 24/V0 | 115 |
| 57.404.7955.5 | WK 4 E / U G2/V0 | 115 |
| 57.404.8055.9 | WK 4 E / U G-ULR/V0 | 115 |
| 57.404.8155.9 | WK 4 E / U GU/V0 | 115 |
| 57.404.8255.5 | WK 4 E / U GO/V0 | 115 |
| 57.404.8355.5 | WK 4 E / U G-URL/V0 | 115 |
| 57.404.8455.5 | WK 4 E / U LD 42V/V0 | 115 |
| 57.404.8755.5 | WK 4 E/U LDG +P O 24/V0 | 115 |
| 57.404.8855.9 | WK 4 E / U G2/1/V0 | 115 |
| 57.404.XX55.5 | | 115 |
| 57.404.XX55.9 | | 115 |
| 57.503.0055.0 | WK 2,5 / U /V0 | 101 |
| 57.503.0055.6 | WK 2,5 / U BL / V0 | 102 |
| 57.503.2055.0 | WK 2,5U/8113S/H/V0 | 137 |
| 57.503.2055.0 | WK 2,5U/8113S/H/V0 | 311 |
| 57.503.2155.0 | WK2,5U/D/8113S/V.../V0 | 134 |
| 57.503.2155.0 | WK2,5U/D/8113S/V.../V0 | 312 |
| 57.503.2255.0 | WK2,5U/D/8113S/V/LD25V0 | 134 |
| 57.503.2255.0 | WK2,5U/D/8113S/V/LD25V0 | 312 |
| 57.503.2355.0 | WK2,5U/D/8113S/V/LD50V0 | 135 |
| 57.503.2355.0 | WK2,5U/D/8113S/V/LD50V0 | 313 |
| 57.503.2555.6 | WK2,5U/D/8113S/V/VK/V0 | 135 |
| 57.503.2555.6 | WK2,5U/D/8113S/V/VK/V0 | 313 |
| 57.503.2655.0 | WK2,5U / 8113S/V... /V0 | 136 |
| 57.503.2655.6 | | 310 |
| 57.503.2755.0 | WK2,5U/8113S/V/LED25/V0 | 136 |

# contents


| Part no. | Type | section / page |
|---|---|---|
| 57.503.2755.0 | WK2,5U/8113S/V/LED25/V0 | 310 |
| 57.503.2855.0 | WK2,5U/8113S/V/LED50/V0 | 137 |
| 57.503.2855.0 | WK2,5U/8113S/V/LED50/V0 | 311 |
| 57.503.3055.6 | WK2,5U/8113S/V/VK/V0 | 137 |
| 57.503.3055.6 | WK2,5U/8113S/V/VK/V0 | 311 |
| 57.503.7055.0 | WK 2,5-4 KOI /U /V0 | 120 |
| 57.503.7155.0 | WK 2,5-4 KOI /U-NGN /V0 | 120 |
| 57.503.7255.0 | WK 2,5-4 KOI /U-PGN /V0 | 121 |
| 57.503.7855.0 | WK 2,5-4 KI/U /V0 | 118 |
| 57.503.7955.0 | WK 2,5-4 KI/U-NGN /V0 | 118 |
| 57.503.8055.0 | WK2,5-4 KI/U-PGN /V0 | 118 |
| 57.503.8855.0 | WK 2,5-3 D/U /V0 | 118 |
| 57.503.8955.0 | WK 2,5-3 D/U-NGN /V0 | 118 |
| 57.503.9055.0 | WK 2,5-3 D/U-PGN /V0 | 118 |
| 57.504.0055.0 | WK 4 / U /V0 | 69 |
| 57.504.0055.6 | WK 4 / U BL / V0 | 69 |
| 57.504.1055.0 | WK 4 / U F1/V0 | 142 |
| 57.504.1155.0 | WK 4 / U F2/V0 | 142 |
| 57.504.1655.0 | WK 4 SI-D/U 5 X25/V0 | 126 |
| 57.504.1755.0 | WK 4 SI-D/U 5 X20/V0 | 126 |
| 57.504.2055.0 | WK 4 TKM/U /V0 | 101 |
| 57.504.2055.6 | WK 4 TKM/U BL /V0 | 123 |
| 57.504.2355.0 | WK 4 TKM P3/U /V0 | 123 |
| 57.504.2755.0 | WK 4 3-6 S 1K/IW/U/V0 | 139 |
| 57.504.2855.0 | WK 4 5S2,8 1K/IW/U/V0 | 139 |
| 57.504.3655.0 | WK / 5-10S / U/V0 | 139 |
| 57.504.3755.0 | WK 4 3-6 S 1K / U / V0 | 138 |
| 57.504.3855.0 | WK 4 5S2,8 1K / U/V0 | 138 |
| 57.504.4055.0 | WK 4 TKG/U /V0 | 101 |
| 57.504.4455.0 | WK 4 TKS D / U V0 | 123 |
| 57.504.4555.0 | WK 4 TKG-TRST / U/V0 | 123 |
| 57.504.4855.0 | WK 4 TKG-TRST P3/ U/V0 | 123 |
| 57.504.5055.0 | WK 4/D1/2U/V0 | 112 |
| 57.504.5055.6 | WK 4 / D 1/2 U/V0 BLAU | 112 |
| 57.504.5155.0 | WK 4/D2/2U/V0 | 112 |
| 57.504.5155.6 | WK 4/D2/2U BL/V0 | 112 |
| 57.504.5255.0 | WK 4/D E U/V0 | 113 |
| 57.504.6255.0 | WK / 4-8S / U/V0 | 141 |
| 57.504.6355.0 | WK / 4-8S / IW / U/V0 | 141 |
| 57.504.6655.0 | WK / 3-6S / U/V0 | 140 |
| 57.504.6755.0 | WK / 3-6S / IW / U/V0 | 140 |
| 57.504.7355.0 | WK 4 / 3-6S KO/U/V0 | 141 |
| 57.504.8155.0 | WKN 4ETK/U/V0 | 69 |
| 57.504.9055.0 | WK 4 SL / U /V0 | 69 |
| 57.504.9155.0 | WK 4/D2/2SLU /V0 | 113 |
| 57.504.9255.0 | WK 4E SL/U /V0 | 115 |
| 57.506.0055.0 | WK 6 / U /V0 | 101 |
| 57.506.0055.6 | WK 6 / U BL / V0 | 101 |
| 57.506.9055.0 | WK 6 SL / U /V0 | 101 |
| 57.510.0155.0 | WKN 10/U /V0 | 101 |
| 57.510.0155.6 | WKN10 / U BL / V0 | 101 |
| 57.510.1155.0 | WKI 10 / U/V0 | 78 |
| 57.510.1155.6 | WKI 10 / U BLAU/V0 | 78 |
| 57.510.8155.0 | WKN 10ETK/U/V0 | 106 |
| 57.510.8255.0 | WKI 10 ETK/U/V0 | 80 |
| 57.510.9055.0 | WKN10 SL/U /V0 | 101 |
| 57.516.0155.0 | WKN16 / U /V0 | 104 |
| 57.516.0155.6 | WKN16 / U BL / V0 | 104 |
| 57.516.1155.0 | WKI 16 / U/V0 | 69 |
| 57.516.1155.6 | WKI 16 / U BLAU/V0 | 69 |
| 57.516.8155.0 | WKN 16ETK/U/V0 | 107 |
| 57.516.8255.0 | WKI 16 ETK/U/V0 | 69 |
| 57.516.9055.0 | WKN16 SL/U /V0 | 109 |
| 57.535.0155.0 | WKN35 / U /V0 | 101 |
| 57.535.0155.6 | WKN35 / U BL / V0 | 101 |
| 57.535.1155.0 | WKI 35 / U/V0 | 79 |
| 57.535.1155.6 | WKI 35 / U BLAU/V0 | 79 |
| 57.535.9055.0 | WKN35 SL/U / V0 | 101 |
| 57.570.0155.0 | WKN70 / U /V0 | 105 |
| 57.570.0155.6 | WKN70 / U BL / V0 | 105 |
| 57.570.9055.0 | WKN 70 SL/U | 110 |
| 57.597.0155.0 | WKN150 / U /V0 | 105 |
| 57.597.0155.6 | WKN150/ U BL / V0 | 105 |
| 57.603.0055.0 | WKB 2,5 / U/V0 | 204 |
| 57.603.3555.0 | WKB 2,5 / B / U/V0 | 205 |
| 57.800.0053.0 | 24 V 1 SCHLIESSER | 448 |
| 57.800.0353.0 | 220 V AC 1 SCHLIESSER | 450 |
| 57.800.5053.0 | 24/48V 1 UMSCHALTER | 448 |
| 57.800.5153.0 | 110/220V 1 UMSCHALTER | 450 |
| 57.800.7053.0 | 24 V 2 UMSCHALTER | 449 |
| 57.801.0053.0 | WEG LEERG. F. 4A | 592 |
| 57.801.5053.0 | WEG LEERG. F. 4A | 592 |
| 57.801.5153.0 | WEG LEERG. F. 6A | 593 |
| 57.801.5253.0 | WEG LEERG. F. 8A | 593 |
| 57.802.1053.0 | UET +- 10 V | 506 |
| 57.802.1153.0 | UET-P +- 10 V | 507 |
| 57.802.1353.0 | UET-P +- 20 MA | 507 |
| 57.802.1453.0 | UET-P +- 199MV | 507 |
| 57.802.2053.0 | UET/LCD +- 10 V | 506 |
| 57.802.2153.0 | UET-P/LCD +-10 V | 507 |
| 57.802.2253.0 | UET/LCD +- 20 MA | 506 |
| 57.802.2353.0 | UET-P/LCD +-20MA | 507 |
| 57.802.3053.0 | SR 4-20 MA/UE 9,5-40VDC | 452 |
| 57.803.8053.0 | KSQ 10 V | 509 |
| 57.806.0053.0 | AKB 10 V / 20MA | 504 |
| 57.806.0253.0 | AKB 20MA / 10 V | 504 |
| 57.806.0353.0 | AKB 4-20MA / 10 V | 504 |
| 57.806.0653.0 | AKT 10 V / 20MA | 505 |
| 57.806.0753.0 | AKT 20MA / 10 V | 505 |
| 57.806.0853.0 | AKT 4-20MA / 10 V | 505 |
| 57.806.0953.0 | AKT 10 V /4-20MA | 505 |
| 57.806.1053.0 | AKT +- 10 V /+-10 V | 505 |
| 57.806.1153.0 | AKT 20MA / 20MA | 505 |
| 57.806.1253.0 | AKT 20MA /4-20MA | 505 |
| 57.806.1353.0 | AKT 4-20MA / 20MA | 505 |
| 57.806.1553.0 | AKB 10 V /4-20MA | 504 |
| 57.806.2153.0 | AKT -+ 10 V /4-20MA | 505 |
| 57.806.2253.0 | AKT -+ 10 V /0-10 V | 505 |
| 57.806.2653.0 | AKT 0-10 V /-+10 V | 505 |
| 57.806.2753.0 | AKT 0-20MA /-+10 V | 505 |
| 57.806.5553.0 | AKT 4-20MA /-+10 V | 505 |
| 57.806.5653.0 | | 505 |
| 57.904.0055.0 | 9785U/10 OHM/V0 | 130 |
| 57.904.0155.0 | 9785U/20 OHM/V0 | 130 |
| 57.904.0255.0 | 9785U/50 OHM/V0 | 130 |
| 57.904.0355.0 | 9785U/100 OHM/V0 | 130 |
| 57.904.0455.0 | 9785U/200 OHM/V0 | 130 |
| 57.904.0555.0 | 9785U/500 OHM/V0 | 130 |
| 57.904.0655.0 | 9785U/1 KOHM/V0 | 130 |
| 57.904.0755.0 | 9785U/2 KOHM/V0 | 130 |
| 57.904.0855.0 | 9785U/5 KOHM/V0 | 130 |
| 57.904.0955.0 | 9785U/10 KOHM/V0 | 130 |
| 57.904.1055.0 | 9785U/20 KOHM/V0 | 130 |
| 57.904.1155.0 | 9785U/50 KOHM/V0 | 130 |
| 57.904.2055.0 | 9786U/12/V0 | 131 |
| 57.904.3955.0 | 9785U/10 OHM-SPT/V0 | 130 |
| 57.904.4155.0 | 9785U/20 OHM-SPT/V0 | 130 |
| 57.904.4255.0 | 9785U/50 OHM-SPT/V0 | 130 |
| 57.904.4355.0 | 9785U/100 OHM-SPT/V0 | 130 |
| 57.904.4455.0 | 9785U/200 OHM-SPT/V0 | 130 |
| 57.904.4555.0 | 9785U/500 OHM-SPT/V0 | 130 |
| 57.904.4655.0 | 9785U/1 KOHM-SPT/V0 | 130 |
| 57.904.4755.0 | 9785U/2 KOHM-SPT/V0 | 130 |
| 57.904.4855.0 | 9785U/5 KOHM-SPT/V0 | 130 |
| 57.904.4955.0 | 9785U/10 KOHM-SPT/V0 | 130 |
| 57.904.5055.0 | 9785U/20 KOHM-SPT/V0 | 130 |
| 57.904.5155.0 | 9785U/50 KOHM-SPT/V0 | 130 |
| 57.904.5355.0 | WK 4 / THSI5 U/V0 | 124 |
| 57.904.5455.0 | WK 4/THSI 5 LED 12U /V0 | 124 |
| 57.904.5555.0 | WK 4/THSI 5 LED 24U /V0 | 124 |
| 57.904.5655.0 | WK 4/THSI 5 LED 60U /V0 | 124 |
| 57.904.5755.0 | WK 4/THSI 5 GL 250U /V0 | 124 |
| 57.904.5855.0 | WK 4/THSI 5 GL 500U /V0 | 124 |
| 57.904.6355.0 | WK 4/THSI6,3 U /V0 | 124 |
| 57.904.6455.0 | WK 4/THSI6,3 LED 12U/V0 | 124 |
| 57.904.6555.0 | WK 4/THSI6,3 LED 24U/V0 | 124 |
| 57.904.6655.0 | WK 4/THSI6,3 LED 60U/V0 | 124 |
| 57.904.6755.0 | WK 4/THSI6,3 GL 250U/V0 | 124 |
| 57.904.6855.0 | WK 4/THSI6,3 GL 500U/V0 | 124 |
| 57.904.7055.0 | 9786U/TSK NICR-CUNI/V0 | 132 |
| 57.904.7155.0 | 9786U/TSK FE-CUNI/V0 | 132 |
| 57.904.7255.0 | 9786U/TSK NICR-NI/V0 | 132 |
| 57.904.7355.0 | 9786U/TSK CU-CUNI/V0 | 132 |
| 57.904.7455.0 | 9786U/TSK E-CU-A-CU/V0 | 132 |
| 57.910.4955.0 | WK 10/SI U D/V0 | 125 |
| 57.910.5055.0 | WK 10/SI U 5 X 20 /V0 | 101 |
| 57.910.5155.0 | WK 10/SI U 5 X 25 /V0 | 125 |
| 57.910.5255.0 | WK 10/SI U 5 X 30 /V0 | 125 |
| 57.910.5355.0 | WK 10/SI U 6,3 X 32 /V0 | 125 |
| 57.910.5455.0 | WK 10/SI U 5X20M.NGL/V0 | 125 |
| 57.910.5755.0 | WK 10/SIU6,3X32M.NGL/V0 | 125 |
| 57.910.5855.0 | WK 10/SI U 5X20M.GLB/V0 | 125 |
| 57.910.6155.0 | WK 10/SIU6,3X32M.GLB/V0 | 125 |
| 59.195.0055.0 | RFK 1 / 95 F PA/V0 | 156 |
| 59.195.0155.0 | RFK 1 / 95 K PA/V0 | 156 |
| 59.195.0255.0 | RFK 1 / 95 FK PA/V0 | 156 |
| 59.195.1055.0 | RFK 1 / 95 FM PA/V0 | 156 |
| 59.195.1255.0 | RFK 1 / 95 FMK PA/V0 | 156 |
| 59.197.0155.0 | RFK 1 / 150 K PA/V0 | 157 |
| 59.197.0255.0 | RFK 1 / 150 FK PA/V0 | 157 |
| 59.197.1255.0 | RFK 1 / 150 FMK PA/V0 | 157 |
| 59.198.0055.0 | RFK 1 / 185 F PA/V0 | 158 |
| 59.198.1055.0 | RFK 1 / 185 FM PA/V0 | 158 |
| 59.199.0055.0 | RFK 1 / 240 F PA/V0 | 159 |
| 59.199.0155.0 | RFK 1 / 240 K PA/V0 | 159 |
| 59.199.0255.0 | RFK 1 / 240 FK PA/V0 | 159 |
| 59.199.1055.0 | RFK 1 / 240 FM PA/V0 | 159 |
| 59.199.1255.0 | RFK 1 / 240 FMK PA/V0 | 159 |
| 59.900.2052.0 | 9290 L | 220 |
| 59.900.2053.6 | 9290 L BLAU | 220 |
| 59.900.2552.0 | 9290 S | 220 |
| 69.332.0000.0 | TS M4 / M6-32 | 219 |
| 69.335.0253.0 | TS M3 S35 | 219 |
| 69.335.0453.0 | TS M4 S35 | 219 |
| 69.335.0553.0 | TS M5 S35 | 219 |
| 69.335.0653.0 | TS M6 S35 | 219 |
| 69.700.0953.0 | VM WKF K0..9 | 45 |
| 69.700.1853.0 | VM WKF K0..18 | 45 |
| 69.920.0553.0 | 300 / 9708 / 2 S35 | 47 |
| 69.920.1053.0 | WEF 1 BS/35 | 47 |
| 69.920.1153.0 | | 47 |
| 70.000.0653.0 | KL.ADA. BU. 6WL | 689 |
| 70.005.0653.0 | KL.ADA. BU. 6WR | 689 |
| 70.010.0653.0 | KL.ADA. ST. 6WL | 689 |
| 70.015.0653.0 | KL.ADA. ST. 6WR | 689 |
| 70.060.1628.0 | DATENEINF.OT. 16P | 755 |
| 70.100.0653.3 | KL.ADA. BU. 6WL | 631 |
| 70.100.0653.4 | KL.ADA. BU. 6WL | 631 |
| 70.100.1053.3 | KL.ADA. BU.10WL | 631 |
| 70.100.1053.4 | KL.ADA. BU.10WL | 631 |
| 70.100.1653.3 | KL.ADA. BU.16WL | 631 |
| 70.100.1653.4 | KL.ADA. BU.16WL | 631 |
| 70.100.2453.3 | KL.ADA. BU.24WL | 631 |
| 70.100.2453.4 | KL.ADA. BU.24WL | 631 |
| 70.101.0653.0 | KL.ADA. BUF 6WL | 631 |
| 70.101.1053.0 | KL.ADA. BUF10WL | 631 |
| 70.101.1653.0 | KL.ADA. BUF16WL | 631 |
| 70.101.2453.0 | KL.ADA. BUF24WL | 631 |
| 70.105.0653.3 | KL.ADA. BU. 6WR | 631 |
| 70.105.0653.4 | KL.ADA. BU. 6WR | 631 |
| 70.105.1053.3 | KL.ADA. BU.10WR | 631 |
| 70.105.1053.4 | KL.ADA. BU.10WR | 631 |
| 70.105.1653.3 | KL.ADA. BU.16WR | 631 |
| 70.105.1653.4 | KL.ADA. BU.16WR | 631 |
| 70.105.2453.3 | KL.ADA. BU.24WR | 631 |
| 70.105.2453.4 | KL.ADA. BU.24WR | 631 |
| 70.106.0653.0 | KL.ADA. BUF 6WR | 631 |
| 70.106.1053.0 | KL.ADA. BUF10WR | 631 |
| 70.106.1653.0 | KL.ADA. BUF16WR | 631 |
| 70.106.2453.0 | KL.ADA. BUF24WR | 631 |
| 70.110.0653.3 | KL.ADA. ST. 6WL | 631 |
| 70.110.0653.4 | KL.ADA. ST. 6WL | 631 |
| 70.110.1053.3 | KL.ADA. ST.10WL | 631 |
| 70.110.1053.4 | KL.ADA. ST.10WL | 631 |
| 70.110.1653.3 | KL.ADA. ST.16WL | 631 |
| 70.110.1653.4 | KL.ADA. ST.16WL | 631 |
| 70.110.2453.3 | KL.ADA. ST.24WL | 631 |
| 70.110.2453.4 | KL.ADA. ST.24WL | 631 |
| 70.111.0653.0 | KL.ADA. STF 6WL | 631 |
| 70.111.1053.0 | KL.ADA. STF10WL | 631 |
| 70.111.1653.0 | KL.ADA. STF10WL | 631 |
| 70.111.2453.0 | KL.ADA. STF24WL | 631 |
| 70.115.0653.3 | KL.ADA. ST. 6WR | 631 |
| 70.115.0653.4 | KL.ADA. ST. 6WR | 631 |
| 70.115.1053.3 | KL.ADA. ST.10WR | 631 |
| 70.115.1053.4 | KL.ADA. ST.10WR | 631 |
| 70.115.1653.3 | KL.ADA. ST.16WR | 631 |
| 70.115.1653.4 | KL.ADA. ST.16WR | 631 |
| 70.115.2453.3 | KL.ADA. ST.24WR | 631 |
| 70.115.2453.4 | KL.ADA. ST.24WR | 631 |
| 70.116.0653.0 | KL.ADA. STF 6WR | 631 |
| 70.116.1053.0 | KL.ADA. STF10WR | 631 |
| 70.116.1653.0 | KL.ADA. STF16WR | 631 |
| 70.116.2453.0 | KL.ADA. STF24WR | 631 |
| 70.120.0353.3 | KL.ADA. BU. 3WL | 643 |
| 70.120.0353.4 | KL.ADA. BU. 3WL | 643 |
| 70.120.0653.3 | KL.ADA. BU. 6WL | 643 |
| 70.120.0653.4 | KL.ADA. BU. 6WL | 643 |
| 70.120.1053.3 | KL.ADA. BU.10WL | 643 |
| 70.120.1053.4 | KL.ADA. BU.10WL | 643 |
| 70.121.0353.0 | KL.ADAP.BUF 3P WL | 643 |
| 70.121.0653.0 | KL.ADAP.BUF 6P WL | 643 |
| 70.121.1053.0 | KL.ADAP.BUF10P WL | 643 |
| 70.125.0353.3 | KL.ADA. BU. 3WR | 643 |
| 70.125.0353.4 | KL.ADA. BU. 3WR | 643 |
| 70.125.0653.3 | KL.ADA. BU. 6WR | 643 |
| 70.125.0653.4 | KL.ADA. BU. 6WR | 643 |
| 70.125.1053.3 | KL.ADA. BU.10WR | 643 |
| 70.125.1053.4 | KL.ADA. BU.10WR | 643 |
| 70.126.0353.0 | KL.ADAP.BUF 3P WR | 643 |
| 70.126.0653.0 | KL.ADAP.BUF 6P WR | 643 |
| 70.126.1053.0 | KL.ADAP.BUF10P WR | 643 |
| 70.130.0353.3 | KL.ADA. ST. 3WL | 643 |
| 70.130.0353.4 | KL.ADA. ST. 3WL | 643 |
| 70.130.0653.3 | KL.ADA. ST. 6WL | 643 |
| 70.130.0653.4 | KL.ADA. ST. 6WL | 643 |
| 70.130.1053.3 | KL.ADA. ST.10WL | 643 |
| 70.130.1053.4 | KL.ADA. ST.10WL | 643 |
| 70.131.0353.0 | KL.ADAP.STF 3P WL | 643 |
| 70.131.0653.0 | KL.ADAP.STF 6P WL | 643 |
| 70.131.1053.0 | KL.ADAP.STF10P WL | 643 |
| 70.135.0353.3 | KL.ADA. ST. 3WR | 643 |
| 70.135.0353.4 | KL.ADA. ST. 3WR | 643 |
| 70.135.0653.3 | KL.ADA. ST. 6WR | 643 |
| 70.135.0653.4 | KL.ADA. ST. 6WR | 643 |
| 70.135.1053.3 | KL.ADA. ST.10WR | 643 |
| 70.135.1053.4 | KL.ADA. ST.10WR | 643 |
| 70.136.0353.0 | KL.ADAP.STF 3P WR | 643 |
| 70.136.0653.0 | KL.ADAP.BUF 3P WR | 643 |
| 70.136.1053.0 | KL.ADAP.BUF 3P WR | 643 |
| 70.200.0653.0 | BUCHSENEINSATZ | 689 |
| 70.210.0653.0 | STECKEREINSATZ | 689 |
| 70.300.0640.0 | BUCHSENEINSATZ | 631 |
| 70.300.1040.0 | BUCHSENEINSATZ | 631 |
| 70.300.1640.0 | BUCHSENEINSATZ | 631 |

# contents of part number

# contents PART NUMBER


| Part no. | Type | section / page |
|---|---|---|
| 70.300.2440.0 | BUCHSENEINSATZ | 631 |
| 70.300.3253.0 | BUCHSENEINSATZ | 631 |
| 70.300.4840.0 | BUCHSENEINSATZ | 631 |
| 70.301.0640.0 | BU.EINSATZ VERGOL | 631 |
| 70.301.1040.0 | BU.EINSATZ VERGOL | 631 |
| 70.301.1640.0 | BU.EINSATZ VERGOL | 631 |
| 70.301.2440.0 | BU.EINSTAZ VERGOL | 631 |
| 70.310.0640.0 | STECKEREINSATZ | 631 |
| 70.310.1040.0 | STECKEREINSATZ | 631 |
| 70.310.1640.0 | STECKEREINSATZ | 631 |
| 70.310.2440.0 | STECKEREINSATZ | 631 |
| 70.310.3253.0 | STECKEREINSATZ | 631 |
| 70.310.4840.0 | STECKEREINSATZ | 631 |
| 70.311.0640.0 | ST.EINSATZ VERGOL | 631 |
| 70.311.1040.0 | ST.EINSATZ VERGOL | 631 |
| 70.311.1640.0 | ST.EINSATZ VERGOL | 631 |
| 70.311.2440.0 | ST.EINSATZ VERGOL | 631 |
| 70.320.0628.0 | GEHAEUSEUNTERTEIL | 634 |
| 70.320.0628.9 | GEHAEUSEUNTERTEIL | 770 |
| 70.320.0638.0 | GEH.UT. 6 POL. | 684 |
| 70.320.1028.0 | GEHAEUSEUNTERTEIL | 638 |
| 70.320.1028.9 | GEHAEUSEUNTERTEIL | 770 |
| 70.320.1038.0 | GEH.UT. 10 POL. | 684 |
| 70.320.1628.0 | GEHAEUSEUNTERTEIL | 638 |
| 70.320.1628.9 | GEHAEUSEUNTERTEIL | 770 |
| 70.320.1638.0 | GEH.UT. 16 POL. | 684 |
| 70.320.2428.0 | GEHAEUSEUNTERTEIL | 638 |
| 70.320.2428.9 | GEHAEUSEUNTERTEIL | 770 |
| 70.320.2438.0 | GEH.UT. 24 POL. | 684 |
| 70.320.3228.0 | GEHAEUSEUNTERTEIL | 638 |
| 70.320.4828.0 | GEHAEUSEUNTERTEIL | 634 |
| 70.320.4828.9 | GEHAEUSEUNTERTEIL | 770 |
| 70.325.0628.0 | GEHAEUSEUNTERTEIL | 635 |
| 70.325.0628.9 | GEHAEUSEUNTERTEIL | 771 |
| 70.325.1028.0 | GEHAEUSEUNTERTEIL | 639 |
| 70.325.1028.9 | GEHAEUSEUNTERTEIL | 771 |
| 70.325.1628.0 | GEHAEUSEUNTERTEIL | 639 |
| 70.325.1628.9 | GEHAEUSEUNTERTEIL | 771 |
| 70.325.2428.0 | GEHAEUSEUNTERTEIL | 639 |
| 70.325.2428.9 | GEHAEUSEUNTERTEIL | 771 |
| 70.325.4828.0 | GEHAEUSEUNTERTEIL | 635 |
| 70.325.4828.9 | GEHAEUSEUNTERTEIL | 771 |
| 70.330.0628.9 | GEHAEUSEUNTERTEIL | 770 |
| 70.330.0635.0 | GEHAEUSEUNTERTEIL | 634 |
| 70.330.0635.1 | GEHAEUSEUNTERTEIL | 634 |
| 70.330.1028.9 | GEHAEUSEUNTERTEIL | 770 |
| 70.330.1035.0 | GEHAEUSEUNTERTEIL | 638 |
| 70.330.1035.1 | GEHAEUSEUNTERTEIL | 638 |
| 70.330.1635.0 | GEHAEUSEUNTERTEIL | 638 |
| 70.330.1635.1 | GEHAEUSEUNTERTEIL | 638 |
| 70.330.2428.9 | GEHAEUSEUNTERTEIL | 770 |
| 70.330.2435.0 | GEHAEUSEUNTERTEIL | 638 |
| 70.330.2435.1 | GEHAEUSEUNTERTEIL | 638 |
| 70.331.0628.9 | GEHAEUSEUNTERTEIL | 770 |
| 70.331.0635.0 | GEHAEUSEUNTERTEIL | 634 |
| 70.331.0635.1 | GEHAEUSEUNTERTEIL | 634 |
| 70.331.1028.9 | GEHAEUSEUNTERTEIL | 770 |
| 70.331.1035.0 | GEHAEUSEUNTERTEIL | 638 |
| 70.331.1035.1 | GEHAEUSEUNTERTEIL | 638 |
| 70.331.1635.0 | GEHAEUSEUNTERTEIL | 638 |
| 70.331.1635.1 | GEHAEUSEUNTERTEIL | 638 |
| 70.331.2428.9 | GEHAEUSEUNTERTEIL | 770 |
| 70.331.2435.0 | GEHAEUSEUNTERTEIL | 638 |
| 70.331.2435.1 | GEHAEUSEUNTERTEIL | 638 |
| 70.331.4828.9 | GEHAEUSEUNTERTEIL | 770 |
| 70.331.4835.0 | GEHAEUSEUNTERTEIL | 634 |
| 70.331.4835.1 | GEHAEUSEUNTERTEIL | 634 |
| 70.331.4835.3 | GEHAEUSEUNTERTEIL | 634 |
| 70.333.0628.9 | GEHAEUSEUNTERTEIL | 771 |
| 70.333.0635.0 | GEHAEUSEUNTERTEIL | 635 |
| 70.333.0635.1 | GEHAEUSEUNTERTEIL | 635 |
| 70.333.1028.9 | GEHAEUSEUNTERTEIL | 771 |
| 70.333.1035.0 | GEHAEUSEUNTERTEIL | 639 |
| 70.333.1035.1 | GEHAEUSEUNTERTEIL | 639 |
| 70.333.1635.0 | GEHAEUSEUNTERTEIL | 639 |
| 70.333.1635.1 | GEHAEUSEUNTERTEIL | 639 |
| 70.333.2428.9 | GEHAEUSEUNTERTEIL | 771 |
| 70.333.2435.0 | GEHAEUSEUNTERTEIL | 639 |
| 70.333.2435.1 | GEHAEUSEUNTERTEIL | 639 |
| 70.340.0628.9 | GEHAEUSEUNTERTEIL | 771 |
| 70.340.0635.0 | GEHAEUSEUNTERTEIL | 635 |
| 70.340.0635.1 | GEHAEUSEUNTERTEIL | 635 |
| 70.340.1028.9 | GEHAEUSEUNTERTEIL | 771 |
| 70.340.1035.0 | GEHAEUSEUNTERTEIL | 639 |
| 70.340.1035.1 | GEHAEUSEUNTERTEIL | 639 |
| 70.340.1635.0 | GEHAEUSEUNTERTEIL | 639 |
| 70.340.1635.1 | GEHAEUSEUNTERTEIL | 639 |
| 70.340.2428.9 | GEHAEUSEUNTERTEIL | 771 |
| 70.340.2435.0 | GEHAEUSEUNTERTEIL | 639 |
| 70.340.2435.1 | GEHAEUSEUNTERTEIL | 639 |
| 70.341.0628.9 | GEHAEUSEUNTERTEIL | 771 |
| 70.341.0635.0 | GEHAEUSEUNTERTEIL | 635 |
| 70.341.0635.1 | GEHAEUSEUNTERTEIL | 635 |
| 70.341.1028.9 | GEHAEUSEUNTERTEIL | 771 |
| 70.341.1035.0 | GEHAEUSEUNTERTEIL | 639 |
| 70.341.1035.1 | GEHAEUSEUNTERTEIL | 639 |
| 70.341.1635.0 | GEHAEUSEUNTERTEIL | 639 |
| 70.341.1635.1 | GEHAEUSEUNTERTEIL | 639 |
| 70.341.2428.9 | GEHAEUSEUNTERTEIL | 771 |
| 70.341.2435.0 | GEHAEUSEUNTERTEIL | 639 |
| 70.341.2435.1 | GEHAEUSEUNTERTEIL | 639 |
| 70.341.4828.9 | GEHAEUSEUNTERTEIL | 771 |
| 70.341.4835.1 | GEHAEUSEUNTERTEIL | 635 |
| 70.341.4835.3 | GEHAEUSEUNTERTEIL | 635 |
| 70.342.0628.9 | GEHAEUSEUNTERTEIL | 771 |
| 70.342.0635.0 | GEHAEUSEUNTERTEIL | 635 |
| 70.342.0635.1 | GEHAEUSEUNTERTEIL | 635 |
| 70.342.1028.9 | GEHAEUSEUNTERTEIL | 771 |
| 70.342.1035.0 | GEHAEUSEUNTERTEIL | 639 |
| 70.342.1035.1 | GEHAEUSEUNTERTEIL | 639 |
| 70.342.1635.0 | GEHAEUSEUNTERTEIL | 639 |
| 70.342.1635.1 | GEHAEUSEUNTERTEIL | 639 |
| 70.342.2428.9 | GEHAEUSEUNTERTEIL | 771 |
| 70.342.2435.0 | GEHAEUSEUNTERTEIL | 639 |
| 70.342.2435.1 | GEHAEUSEUNTERTEIL | 639 |
| 70.343.0628.9 | GEHAEUSEUNTERTEIL | 771 |
| 70.343.0635.0 | GEHAEUSEUNTERTEIL | 635 |
| 70.343.0635.1 | GEHAEUSEUNTERTEIL | 635 |
| 70.343.1028.9 | | 771 |
| 70.343.1035.0 | GEHAEUSEUNTERTEIL | 639 |
| 70.343.1035.1 | GEHAEUSEUNTERTEIL | 639 |
| 70.343.1635.0 | GEHAEUSEUNTERTEIL | 639 |
| 70.343.1635.1 | GEHAEUSEUNTERTEIL | 639 |
| 70.343.2428.9 | GEHAEUSEUNTERTEIL | 771 |
| 70.343.2435.0 | GEHAEUSEUNTERTEIL | 639 |
| 70.343.2435.1 | GEHAEUSEUNTERTEIL | 639 |
| 70.344.4828.9 | GEHAEUSEUNTERTEIL | 771 |
| 70.344.4835.1 | GEHAEUSEUNTERTEIL | 635 |
| 70.350.0628.7 | GEHAEUSEOBERTEIL | 769 |
| 70.350.0635.0 | GEHAEUSEOBERTEIL | 633 |
| 70.350.0635.1 | GEHAEUSEOBERTEIL | 633 |
| 70.350.0635.2 | GEHAEUSEOBERTEIL | 633 |
| 70.350.0635.3 | GEHAEUSEOBERTEIL | 633 |
| 70.350.0645.1 | | 684 |
| 70.350.1028.7 | GEHAEUSEOBERTEIL | 769 |
| 70.350.1035.0 | GEHAEUSEOBERTEIL | 637 |
| 70.350.1035.1 | GEHAEUSEOBERTEIL | 637 |
| 70.350.1035.2 | | 637 |
| 70.350.1035.3 | GEHAEUSEOBERTEIL | 637 |
| 70.350.1045.1 | | 684 |
| 70.350.1628.7 | GEHAEUSEOBERTEIL | 769 |
| 70.350.1635.0 | GEHAEUSEOBERTEIL | 637 |
| 70.350.1635.1 | GEHAEUSEOBERTEIL | 637 |
| 70.350.1635.2 | | 637 |
| 70.350.1635.3 | GEHAEUSEOBERTEIL | 637 |
| 70.350.2428.7 | | 769 |
| 70.350.2435.0 | GEHAEUSEOBERTEIL | 637 |
| 70.350.2435.1 | GEHAEUSEOBERTEIL | 637 |
| 70.350.2435.2 | GEHAEUSEOBERTEIL | 637 |
| 70.350.2435.3 | GEHAEUSEOBERTEIL | 637 |
| 70.350.3235.0 | GEHAEUSEOBERTEIL | 637 |
| 70.350.3235.1 | GEHAEUSEOBERTEIL | 637 |
| 70.350.3235.2 | GEHAEUSEOBERTEIL | 637 |
| 70.350.3235.3 | GEHAEUSEOBERTEIL | 637 |
| 70.350.4828.7 | GEHAEUSEOBERTEIL | 769 |
| 70.350.4835.0 | GEHAEUSEOBERTEIL | 633 |
| 70.350.4835.1 | GEHAEUSEOBERTEIL | 633 |
| 70.350.4835.2 | GEHAEUSEOBERTEIL | 633 |
| 70.350.4835.3 | GEHAEUSEOBERTEIL | 633 |
| 70.351.0635.0 | GEHAEUSEOBERTEIL | 633 |
| 70.351.0635.1 | | 633 |
| 70.351.0635.2 | GEHAEUSEOBERTEIL | 633 |
| 70.351.0635.3 | GEHAEUSEOBERTEIL | 633 |
| 70.351.1035.0 | GEHAEUSEOBERTEIL | 637 |
| 70.351.1035.1 | GEHAEUSE-OBERTEIL | 637 |
| 70.351.1035.2 | GEHAEUSEOBERTEIL | 637 |
| 70.351.1035.3 | GEHAEUSEOBERTEIL | 637 |
| 70.351.1635.0 | GEHAEUSEOBERTEIL | 637 |
| 70.351.1635.1 | GEHAEUSE-OBERTEIL | 637 |
| 70.351.1635.2 | GEHAEUSEOBERTEIL | 637 |
| 70.351.1635.3 | GEHAEUSEOBERTEIL | 637 |
| 70.351.2435.0 | GEHAEUSEOBERTEIL | 637 |
| 70.351.2435.1 | GEHAEUSE-OBERTEIL | 637 |
| 70.351.2435.2 | GEHAEUSEOBERTEIL | 637 |
| 70.351.2435.3 | GEHAEUSEOBERTEIL | 637 |
| 70.352.0628.7 | GEHAEUSEOBERTEIL | 769 |
| 70.352.0635.0 | GEHAEUSEOBERTEIL | 633 |
| 70.352.0635.1 | GEHAEUSEOBERTEIL | 633 |
| 70.352.0635.2 | GEHAEUSEOBERTEIL | 633 |
| 70.352.0635.3 | GEHAEUSEOBERTEIL | 633 |
| 70.352.1028.7 | | 769 |
| 70.352.1035.0 | GEHAEUSEOBERTEIL | 637 |
| 70.352.1035.1 | GEHAEUSEOBERTEIL | 637 |
| 70.352.1035.2 | GEHAEUSEOBERTEIL | 637 |
| 70.352.1035.3 | GEHAEUSEOBERTEIL | 637 |
| 70.352.1635.0 | GEHAEUSEOBERTEIL | 637 |
| 70.352.1635.1 | GEHAEUSEOBERTEIL | 637 |
| 70.352.1635.2 | GEHAEUSEOBERTEIL | 637 |
| 70.352.1635.3 | GEHAEUSEOBERTEIL | 637 |
| 70.352.2428.7 | GEHAEUSEOBERTEIL | 773 |
| 70.352.2435.0 | GEHAEUSEOBERTEIL | 637 |
| 70.352.2435.1 | GEHAEUSEOBERTEIL | 637 |
| 70.352.2435.2 | GEHAEUSEOBERTEIL | 637 |
| 70.352.2435.3 | GEHAEUSEOBERTEIL | 637 |
| 70.352.3235.0 | GEHAEUSEOBERTEIL | 637 |
| 70.352.3235.1 | GEHAEUSEOBERTEIL | 637 |
| 70.352.3235.2 | GEHAEUSEOBERTEIL | 637 |
| 70.352.3235.3 | GEHAEUSEOBERTEIL | 637 |
| 70.352.4828.7 | GEHAEUSEOBERTEIL | 769 |
| 70.352.4835.0 | GEHAEUSEOBERTEIL | 633 |
| 70.352.4835.1 | GEHAEUSEOBERTEIL | 633 |
| 70.352.4835.2 | GEHAEUSEOBERTEIL | 633 |
| 70.352.4835.3 | GEHAEUSEOBERTEIL | 633 |
| 70.353.0635.0 | GEHAEUSEOBERTEIL | 633 |
| 70.353.0635.1 | GEHAEUSEOBERTEILE | 633 |
| 70.353.0635.2 | GEHAEUSEOBERTEIL | 633 |
| 70.353.0635.3 | GEHAEUSEOBERTEIL | 633 |
| 70.353.0645.1 | | 684 |
| 70.353.1035.0 | GEHAEUSEOBERTEIL | 637 |
| 70.353.1035.1 | GEHAEUSEOBERTEIL | 637 |
| 70.353.1035.2 | GEHAEUSEOBERTEIL | 637 |
| 70.353.1035.3 | GEHAEUSEOBERTEIL | 637 |
| 70.353.1635.0 | GEHAEUSEOBERTEIL | 637 |
| 70.353.1635.1 | GEHAEUSEOBERTEIL | 637 |
| 70.353.1635.2 | GEHAEUSEOBERTEIL | 637 |
| 70.353.1635.3 | GEHAEUSEOBERTEIL | 637 |
| 70.353.1645.1 | | 684 |
| 70.353.2435.0 | GEHAEUSEOBERTEIL | 637 |
| 70.353.2435.1 | GEHAEUSEOBERTEIL | 637 |
| 70.353.2435.2 | GEHAEUSEOBERTEIL | 637 |
| 70.353.2435.3 | GEHAEUSEOBERTEIL | 637 |
| 70.353.2445.1 | | 684 |
| 70.353.3235.1 | GEHAEUSEOBERTEIL | 637 |
| 70.353.3235.2 | GEHAEUSEOBERTEIL | 637 |
| 70.353.4828.7 | GEHAEUSEOBERTEIL | 769 |
| 70.353.4835.1 | GEHAEUSEOBERTEIL | 633 |
| 70.353.4835.2 | GEHAEUSEOBERTEIL | 633 |
| 70.354.0628.7 | GEHAEUSEOBERTEIL | 769 |
| 70.354.0635.0 | GEHAEUSEOBERTEIL | 633 |
| 70.354.0635.1 | GEHAEUSEOBERTEIL | 633 |
| 70.354.0635.2 | GEHAEUSEOBERTEIL | 633 |
| 70.354.0635.3 | GEHAEUEOBERTEIL | 633 |
| 70.354.1028.7 | GEHAEUSEOBERTEIL | 769 |
| 70.354.1035.0 | GEHAEUSEOBERTEIL | 637 |
| 70.354.1035.1 | GEHAEUSEOBERTEIL | 637 |
| 70.354.1035.2 | GEHAEUSEOBERTEIL | 637 |
| 70.354.1035.3 | GEHAEUSEOBERTEIL | 637 |
| 70.354.1628.7 | GEHAEUSEOBERTEIL | 769 |
| 70.354.1635.0 | GEHAEUSEOBERTEIL | 637 |
| 70.354.1635.1 | GEHAEUSEOBERTEIL | 637 |
| 70.354.1635.2 | GEHAEUSEOBERTEIL | 637 |
| 70.354.1635.3 | GEHAEUSEOBERTEIL | 637 |
| 70.354.2428.7 | | 769 |
| 70.354.2435.0 | GEHAEUSEOBERTEIL | 637 |
| 70.354.2435.1 | GEHAEUSEOBERTEIL | 637 |
| 70.354.2435.2 | GEHAEUSEOBERTEIL | 637 |
| 70.354.2435.3 | GEHAEUSEOBERTEIL | 637 |
| 70.354.3235.1 | GEHAEUSEOBERTEIL | 637 |
| 70.354.3235.2 | GEHAEUSEOBERTEIL | 637 |
| 70.354.4828.7 | GEHAEUSEOBERTEIL | 769 |
| 70.354.4835.1 | GEHAEUSEOBERTEIL | 633 |
| 70.354.4835.2 | GEHAEUSEOBERTEIL | 633 |
| 70.355.1028.7 | GEHAEUSEOBERTEIL | 769 |
| 70.355.1035.0 | GEHAEUSEOBERTEIL | 637 |
| 70.355.1035.1 | GEHAEUSE-OBERTEIL | 637 |
| 70.355.1035.2 | GEHAEUSE-OBERTEIL | 637 |
| 70.355.1035.3 | GEHAEUSEOBERTEIL | 637 |
| 70.355.1628.7 | GEHAEUSEOBERTEIL | 769 |
| 70.355.1635.0 | GEHAEUSEOBERTEIL | 637 |
| 70.355.1635.1 | GEHAEUSE-OBERTEIL | 637 |
| 70.355.1635.2 | GEHAEUSE-OBERTEIL | 637 |
| 70.355.1635.3 | GEHAEUSEOBERTEIL | 637 |
| 70.355.2435.0 | GEHAEUSEOBERTEIL | 637 |
| 70.355.2435.1 | GEHAEUSE-OBERTEIL | 637 |
| 70.355.2435.2 | GEHAEUSE-OBERTEIL | 637 |
| 70.355.2435.3 | GEHAEUSEOBERTEIL | 637 |
| 70.356.1035.0 | GEHAEUSEOBERTEIL | 637 |
| 70.356.1035.1 | GEHAEUSE-OBERTEIL | 637 |
| 70.356.1035.2 | GEHAEUSEOBERTEIL | 637 |
| 70.356.1035.3 | GEHAEUSEOBERTEIL | 637 |
| 70.356.1635.0 | GEHAEUSEOBERTEIL | 637 |
| 70.356.1635.1 | GEHAEUSE-OBERTEIL | 637 |
| 70.356.1635.2 | GEHAEUSEOBERTEIL | 637 |
| 70.356.1635.3 | GEHAEUSEOBERTEIL | 637 |
| 70.356.2435.0 | GEHAEUSEOBERTEIL | 637 |
| 70.356.2435.1 | GEHAEUSE-OBERTEIL | 637 |
| 70.356.2435.2 | GEHAEUSEOBERTEIL | 637 |
| 70.356.2435.3 | GEHAEUSEOBERTEIL | 637 |
| 70.357.1035.0 | GEHAEUSEOBERTEIL | 637 |
| 70.357.1035.1 | GEHAEUSE-OBERTEIL | 637 |
| 70.357.1035.2 | GEHAEUSEOBERTEIL | 637 |
| 70.357.1035.3 | GEHAEUSEOBERTEIL | 637 |
| 70.357.1635.0 | GEHAEUSEOBERTEIL | 637 |
| 70.357.1635.1 | GEHAEUSE-OBERTEIL | 637 |

# contents


| Part no. | Type | section / page |
|---|---|---|
| 70.357.1635.2 | GEHAEUSEOBERTEIL | 637 |
| 70.357.1635.3 | GEHAEUSEOBERTEIL | 637 |
| 70.357.2435.0 | GEHAEUSEOBERTEIL | 637 |
| 70.357.2435.1 | GEHAEUSE-OBERTEIL | 637 |
| 70.357.2435.2 | GEHAEUSEOBERTEIL | 637 |
| 70.357.2435.3 | GEHAEUSEOBERTEIL | 637 |
| 70.358.1035.0 | GEHAEUSEOBERTEIL | 637 |
| 70.358.1035.1 | GEHAEUSEOBERTEIL | 637 |
| 70.358.1035.2 | GEHAEUSEOBERTEIL | 637 |
| 70.358.1035.3 | GEHAEUSEOBERTEIL | 637 |
| 70.358.1635.0 | GEHAEUSEOBERTEIL | 637 |
| 70.358.1635.1 | GEHAEUSEOBERTEIL | 637 |
| 70.358.1635.2 | GEHAEUSEOBERTEIL | 637 |
| 70.358.1635.3 | GEHAEUSEOBERTEIL | 637 |
| 70.358.2428.7 | | 769 |
| 70.358.2435.0 | GEHAEUSEOBERTEIL | 637 |
| 70.358.2435.1 | GEHAEUSEOBERTEIL | 637 |
| 70.358.2435.2 | GEHAEUSEOBERTEIL | 637 |
| 70.358.2435.3 | GEHAEUSEOBERTEIL | 637 |
| 70.359.1035.0 | GEHAEUSEOBERTEIL | 637 |
| 70.359.1035.1 | GEHAEUSEOBERTEIL | 637 |
| 70.359.1035.2 | GEHAEUSEOBERTEIL | 637 |
| 70.359.1035.3 | GEHAEUSEOBERTEIL | 637 |
| 70.359.1628.7 | | 769 |
| 70.359.1635.0 | GEHAEUSEOBERTEIL | 637 |
| 70.359.1635.1 | GEHAEUSEOBERTEIL | 637 |
| 70.359.1635.2 | GEHAEUSEOBERTEIL | 637 |
| 70.359.1635.3 | GEHAEUSEOBERTEIL | 637 |
| 70.359.2435.0 | GEHAEUSEOBERTEIL | 637 |
| 70.359.2435.1 | GEHAEUSEOBERTEIL | 637 |
| 70.359.2435.2 | GEHAEUSEOBERTEIL | 637 |
| 70.359.2435.3 | GEHAEUSEOBERTEIL | 637 |
| 70.360.0628.9 | GEHAEUSEOBERTEIL | 769 |
| 70.360.1028.9 | GEHAEUSEOBERTEIL | 769 |
| 70.360.1628.9 | GEHAEUSEOBERTEIL | 769 |
| 70.360.2428.9 | GEHAEUSEOBERTEIL | 769 |
| 70.360.4828.9 | GEHAEUSEOBERTEIL | 769 |
| 70.362.0628.9 | GEHAEUSEOBERTEIL | 769 |
| 70.362.1028.9 | GEHAEUSEOBERTEIL | 769 |
| 70.362.1628.9 | GEHAEUSEOBERTEIL | 769 |
| 70.362.2428.9 | GEHAEUSEOBERTEIL | 772 |
| 70.362.4828.9 | GEHAEUSEOBERTEIL | 769 |
| 70.363.0628.9 | GEHAEUSEOBERTEIL | 769 |
| 70.363.1028.9 | GEHAEUSEOBERTEIL | 769 |
| 70.363.1628.9 | GEHAEUSEOBERTEIL | 769 |
| 70.363.2428.9 | GEHAEUSEOBERTEIL | 769 |
| 70.364.0628.9 | GEHAEUSEOBERTEIL | 769 |
| 70.364.1028.9 | GEHAEUSEOBERTEIL | 769 |
| 70.364.1628.9 | GEHAEUSEOBERTEIL | 769 |
| 70.364.4828.9 | GEHAEUSEOBERTEIL | 769 |
| 70.365.1028.9 | GEHAEUSEOBERTEIL | 769 |
| 70.365.1628.9 | GEHAEUSEOBERTEIL | 769 |
| 70.365.2428.9 | GEHAEUSEOBERTEIL | 769 |
| 70.367.1028.9 | GEHAEUSEOBERTEIL | 769 |
| 70.367.1628.9 | GEHAEUSEOBERTEIL | 769 |
| 70.367.2428.9 | GEHAEUSEOBERTEIL | 769 |
| 70.368.1028.9 | GEHAEUSEOBERTEIL | 769 |
| 70.368.1628.9 | GEHAEUSEOBERTEIL | 769 |
| 70.368.2428.9 | GEHAEUSEOBERTEIL | 769 |
| 70.369.1028.9 | GEHAEUSEOBERTEIL | 769 |
| 70.369.1628.9 | GEHAEUSEOBERTEIL | 769 |
| 70.372.0628.7 | GEHAEUSEOBERTEIL | 773 |
| 70.372.0635.0 | GEHAEUSEOBERTEIL | 733 |
| 70.372.0635.3 | GEHAEUSEOBERTEIL | 733 |
| 70.372.1028.7 | GEHAEUSEOBERTEIL | 773 |
| 70.372.1035.0 | GEHAEUSEOBERTEIL | 733 |
| 70.372.1035.3 | GEHAEUSEOBERTEIL | 733 |
| 70.372.1628.7 | GEHAEUSEOBERTEIL | 773 |
| 70.372.1635.0 | GEHAEUSEOBERTEIL | 733 |
| 70.372.1635.3 | GEHAEUSEOBERTEIL | 733 |
| 70.372.2428.7 | GEHAEUSEOBERTEIL | 773 |
| 70.372.4828.7 | GEHAEUSEOBERTEIL | 773 |
| 70.372.4835.3 | GEHAEUSEOBERTEIL | 733 |
| 70.374.1635.0 | | 733 |
| 70.374.1635.3 | | 733 |
| 70.374.2435.0 | | 733 |
| 70.374.2435.3 | GEHAEUSEOBERTEIL | 733 |
| 70.375.4828.9 | GEHAEUSEOBERTEIL | 772 |
| 70.375.4835.3 | GEHAEUSEOBERTEIL | 733 |
| 70.377.4828.9 | GEHAEUSEOBERTEIL | 772 |
| 70.400.0340.0 | BU.EINSATZ 660V | 643 |
| 70.400.0640.0 | BU.EINSATZ 660V | 643 |
| 70.400.1040.0 | BU.EINSATZ 660V | 643 |
| 70.400.1640.0 | BU.EINSATZ 660V | 643 |
| 70.400.2040.0 | BU.EINSATZ 660V | 643 |
| 70.400.2640.0 | BU.EINSATZ 660V | 643 |
| 70.400.3240.0 | BU.EINSATZ 660V | 643 |
| 70.410.0340.0 | ST.EINSATZ 660V | 643 |
| 70.410.0640.0 | ST.EINSATZ 660V | 643 |
| 70.410.1040.0 | ST.EINSATZ 660V | 643 |
| 70.410.1640.0 | ST.EINSATZ 660V | 643 |
| 70.410.2040.0 | ST.EINSATZ 660V | 643 |
| 70.410.2640.0 | ST.EINSATZ 660V | 643 |
| 70.410.3240.0 | ST.EINSATZ 660V | 643 |
| 70.500.0653.0 | BUCHSENEINSATZ | 631 |

| Part no. | Type | section / page |
|---|---|---|
| 70.500.1053.0 | BUCHSENEINSATZ | 631 |
| 70.500.1653.0 | BUCHSENEINSATZ | 631 |
| 70.500.2453.0 | BUCHSENEINSATZ | 631 |
| 70.500.3253.0 | BUCHSENEINSATZ | 631 |
| 70.500.4853.0 | BUCHSENEINSATZ | 631 |
| 70.510.0653.0 | STECKEREINSATZ | 631 |
| 70.510.1053.0 | STECKEREINSATZ | 631 |
| 70.510.1653.0 | STECKEREINSATZ | 631 |
| 70.510.2453.0 | STECKEREINSATZ | 631 |
| 70.510.3253.0 | STECKEREINSATZ | 631 |
| 70.510.4853.0 | STECKEREINSATZ | 631 |
| 70.700.0658.0 | BUCHSENEINSATZ | 631 |
| 70.700.1058.0 | BUCHSENEINSATZ | 631 |
| 70.700.1658.0 | BUCHSENEINSATZ | 631 |
| 70.700.2458.0 | BUCHSENEINSATZ | 631 |
| 70.700.3253.0 | BUCHSENEINSATZ | 631 |
| 70.700.4858.0 | BUCHSENEINSATZ | 631 |
| 70.710.0658.0 | STECKEREINSATZ | 631 |
| 70.710.1058.0 | STECKEREINSATZ | 631 |
| 70.710.1658.0 | STECKEREINSATZ | 631 |
| 70.710.2458.0 | STECKEREINSATZ | 631 |
| 70.710.3253.0 | STECKEREINSATZ | 631 |
| 70.710.4858.0 | STECKEREINSATZ | 631 |
| 70.940.0653.3 | ADA.I.GEH.BU. 6WL | 667 |
| 70.940.0653.4 | ADA.I.GEH.BU.06WL | 667 |
| 70.940.1053.3 | ADA.I.GEH.BU.10WL | 667 |
| 70.940.1053.4 | ADA.I.GEH.BU.10WL | 667 |
| 70.940.1653.3 | ADA.I.GEH.BU.16WL | 667 |
| 70.940.1653.4 | ADA.I.GEH.BU.16WL | 667 |
| 70.940.2453.3 | ADA.I.GEH.BU.24WL | 667 |
| 70.940.2453.4 | ADA.I.GEH.BU.24WL | 667 |
| 70.945.0653.3 | ADA.I.GEH.BU. 6WR | 667 |
| 70.945.0653.4 | ADA.I.GEH.BU. 6WR | 667 |
| 70.945.1053.3 | ADA.I.GEH.BU.10WR | 667 |
| 70.945.1053.4 | ADA.I.GEH.BU.10WR | 667 |
| 70.945.1653.3 | ADA.I.GEH.BU.16WR | 667 |
| 70.945.1653.4 | ADA.I.GEH.BU.16WR | 667 |
| 70.945.2453.3 | ADA.I.GEH.BU.24WR | 667 |
| 70.945.2453.4 | ADA.I.GEH.BU.24WR | 667 |
| 70.950.0653.3 | ADA.I.GEH.ST. 6WL | 667 |
| 70.950.0653.4 | ADA.I.GEH.ST.06WL | 667 |
| 70.950.1053.3 | ADA.I.GEH.ST.10WL | 667 |
| 70.950.1053.4 | ADA.I.GEH.ST.10WL | 667 |
| 70.950.1653.3 | ADA.I.GEH.ST.16WL | 667 |
| 70.950.1653.4 | ADA.I.GEH.ST.16WL | 667 |
| 70.950.2453.3 | ADA.I.GEH.ST.24WL | 667 |
| 70.950.2453.4 | ADA.I.GEH.ST.24WL | 667 |
| 70.955.0653.3 | ADA.I.GEH.ST. 6WR | 667 |
| 70.955.0653.4 | ADA.I.GEH.ST. 6WR | 667 |
| 70.955.1053.3 | ADA.I.GEH.ST.10WR | 667 |
| 70.955.1053.4 | ADA.I.GEH.ST.10WR | 667 |
| 70.955.1653.3 | ADA.I.GEH.ST.16WR | 667 |
| 70.955.1653.4 | ADA.I.GEH.ST.16WR | 667 |
| 70.955.2453.3 | ADA.I.GEH.ST.24WR | 667 |
| 70.955.2453.4 | ADA.I.GEH.ST.24WR | 667 |
| 70.960.0353.3 | ADA.I.GEH.BU. 3WL | 671 |
| 70.960.0353.4 | ADA.I.GEH.BU. 3WL | 671 |
| 70.960.0653.3 | ADA.I.GEH.BU. 6WL | 671 |
| 70.960.0653.4 | ADA.I.GEH.BU. 6WL | 671 |
| 70.960.1053.3 | ADA.I.GEH.BU.10WL | 671 |
| 70.960.1053.4 | ADA.I.GEH.BU.10WL | 671 |
| 70.965.0353.3 | ADA.I.GEH.BU. 3WR | 671 |
| 70.965.0353.4 | ADA.I.GEH. 3WR | 671 |
| 70.965.0653.3 | ADA.I.GEH.BU. 6WR | 671 |
| 70.965.0653.4 | ADA.I.GEH.BU. 6WR | 671 |
| 70.965.1053.3 | ADA.I.GEH.BU.10WR | 671 |
| 70.965.1053.4 | ADA.I.GEH.BU.10WL | 671 |
| 70.970.0353.3 | ADA.I.GEH.ST. 3WL | 671 |
| 70.970.0353.4 | ADA.I:GEH.ST. 3WL | 671 |
| 70.970.0653.3 | ADA.I.GEH.ST. 6WL | 671 |
| 70.970.0653.4 | ADA.I.GEH.ST. 6WL | 671 |
| 70.970.1053.3 | ADA.I.GEH.ST.10WL | 671 |
| 70.970.1053.4 | ADA.I.GEH.ST.10WL | 671 |
| 70.975.0353.3 | ADA.I.GEH.ST. 3WR | 671 |
| 70.975.0353.4 | ADA.I.GEH.ST. 3WR | 671 |
| 70.975.0653.3 | ADA.I.GEH.ST. 6WR | 671 |
| 70.975.0653.4 | ADA.I.GEH.ST. 6WR | 671 |
| 70.975.1053.3 | ADA.I.GEH.ST.10WR | 671 |
| 70.975.1053.4 | ADA.I.GEH.ST.10WR | 671 |
| 71.320.1028.0 | GEHAEUSEUNTERTEIL | 634 |
| 71.320.1628.0 | GEHAEUSEUNTERTEIL | 634 |
| 71.320.2428.0 | GEHAEUSEUNTERTEIL | 634 |
| 71.325.1028.0 | GEHAEUSEUNTERTEIL | 635 |
| 71.325.1628.0 | GEHAEUSEUNTERTEIL | 635 |
| 71.325.2428.0 | GEHAEUSEUNTERTEIL | 635 |
| 71.330.1035.0 | GEHAEUSEUNTERTEIL | 634 |
| 71.330.1035.1 | GEHAEUSEUNTERTEIL | 634 |
| 71.330.1635.0 | GEHAEUSEUNTERTEIL | 634 |
| 71.330.1635.1 | GEHAEUSEUNTERTEIL | 634 |
| 71.330.2435.0 | GEHAEUSEUNTERTEIL | 634 |
| 71.330.2435.1 | GEHAEUSEUNTERTEIL | 634 |
| 71.331.1035.0 | GEHAEUSEUNTERTEIL | 634 |
| 71.331.1035.1 | GEHAEUSEUNTERTEIL | 634 |
| 71.331.1635.0 | GEHAEUSEUNTERTEIL | 634 |
| 71.331.1635.1 | GEHAEUSEUNTERTEIL | 634 |

| Part no. | Type | section / page |
|---|---|---|
| 71.331.2435.0 | GEHAEUSEUNTERTEIL | 634 |
| 71.331.2435.1 | GEHAEUSEUNTERTEIL | 634 |
| 71.333.1035.0 | GEHAEUSEUNTERTEIL | 635 |
| 71.333.1035.1 | GEHAEUSEUNTERTEIL | 635 |
| 71.333.1635.0 | GEHAEUSEUNTERTEIL | 635 |
| 71.333.1635.1 | GEHAEUSEUNTERTEIL | 635 |
| 71.333.2435.0 | GEHAEUSEUNTERTEIL | 635 |
| 71.333.2435.1 | GEHAEUSEUNTERTEIL | 635 |
| 71.340.1035.0 | GEHAEUSEUNTERTEIL | 635 |
| 71.340.1035.1 | GEHAEUSEUNTERTEIL | 635 |
| 71.340.1635.0 | GEHAEUSEUNTERTEIL | 635 |
| 71.340.1635.1 | GEHAEUSEUNTERTEIL | 635 |
| 71.340.2435.0 | GEHAEUSEUNTERTEIL | 635 |
| 71.340.2435.1 | GEHAEUSEUNTERTEIL | 635 |
| 71.341.1035.0 | GEHAEUSEUNTERTEIL | 635 |
| 71.341.1035.1 | GEHAEUSEUNTERTEIL | 635 |
| 71.341.1635.0 | GEHAEUSEUNTERTEIL | 635 |
| 71.341.1635.1 | GEHAEUSEUNTERTEIL | 635 |
| 71.341.2435.0 | GEHAEUSEUNTERTEIL | 635 |
| 71.341.2435.1 | GEHAEUSEUNTERTEIL | 635 |
| 71.342.1035.0 | GEHAEUSEUNTERTEIL | 635 |
| 71.342.1035.1 | GEHAEUSEUNTERTEIL | 635 |
| 71.342.1635.0 | GEHAEUSEUNTERTEIL | 635 |
| 71.342.1635.1 | GEHAEUSEUNTERTEIL | 635 |
| 71.342.2435.0 | GEHAEUSEUNTERTEIL | 635 |
| 71.342.2435.1 | GEHAEUSEUNTERTEIL | 635 |
| 71.343.1035.0 | GEHAEUSEUNTERTEIL | 635 |
| 71.343.1035.1 | GEHAEUSEUNTERTEIL | 635 |
| 71.343.1635.0 | GEHAEUSEUNTERTEIL | 635 |
| 71.343.1635.1 | GEHAEUSEUNTERTEIL | 635 |
| 71.343.2435.0 | GEHAEUSEUNTERTEIL | 635 |
| 71.343.2435.1 | GEHAEUSEUNTERTEIL | 635 |
| 71.350.1035.0 | GEHAEUSEOBERTEIL | 633 |
| 71.350.1035.1 | GEHAEUSEOBERTEIL | 633 |
| 71.350.1035.2 | GEHAEUSEOBERTEIL | 633 |
| 71.350.1035.3 | GEHAEUSEOBERTEIL | 633 |
| 71.350.1635.0 | GEHAEUSEOBERTEIL | 633 |
| 71.350.1635.1 | GEHAEUSEOBERTEIL | 633 |
| 71.350.1635.2 | GEHAEUSEOBERTEIL | 633 |
| 71.350.1635.3 | GEHAEUSEOBERTEIL | 633 |
| 71.350.2435.0 | GEHAEUSEOBERTEIL | 633 |
| 71.350.2435.1 | GEHAEUSEOBERTEIL | 633 |
| 71.350.2435.2 | GEHAEUSEOBERTEIL | 633 |
| 71.350.2435.3 | GEHAEUSEOBERTEIL | 633 |
| 71.351.1035.0 | GEHAEUSEOBERTEIL | 633 |
| 71.351.1035.1 | GEHAEUSEOBERTEIL | 633 |
| 71.351.1035.2 | GEHAEUSEOBERTEIL | 633 |
| 71.351.1035.3 | GEHAEUSEOBERTEIL | 633 |
| 71.351.1635.0 | GEHAEUSEOBERTEIL | 633 |
| 71.351.1635.1 | GEHAEUSEOBERTEIL | 633 |
| 71.351.1635.2 | GEHAEUSEOBERTEIL | 633 |
| 71.351.1635.3 | GEHAEUSEOBERTEIL | 633 |
| 71.351.2435.0 | GEHAEUSEOBERTEIL | 633 |
| 71.351.2435.1 | GEHAEUSEOBERTEIL | 633 |
| 71.351.2435.2 | GEHAEUSEOBERTEIL | 633 |
| 71.351.2435.3 | GEHAEUSEOBERTEIL | 633 |
| 71.352.1035.0 | GEHAEUSEOBERTEIL | 633 |
| 71.352.1035.1 | GEHAEUSEOBERTEIL | 633 |
| 71.352.1035.2 | GEHAEUSEOBERTEIL | 633 |
| 71.352.1035.3 | GEHAEUSEOBERTEIL | 633 |
| 71.352.1635.0 | GEHAEUSEOBERTEIL | 633 |
| 71.352.1635.1 | GEHAEUSEOBERTEIL | 633 |
| 71.352.1635.2 | GEHAEUSEOBERTEIL | 633 |
| 71.352.1635.3 | GEHAEUSEOBERTEIL | 633 |
| 71.352.2435.0 | GEHAEUSEOBERTEIL | 633 |
| 71.352.2435.1 | GEHAEUSEOBERTEIL | 633 |
| 71.352.2435.2 | GEHAEUSEOBERTEIL | 633 |
| 71.352.2435.3 | GEHAEUSEOBERTEIL | 633 |
| 71.353.1035.0 | GEHAEUSEOBERTEIL | 633 |
| 71.353.1035.1 | GEHAEUSEOBERTEIL | 633 |
| 71.353.1035.2 | GEHAEUSEOBERTEIL | 633 |
| 71.353.1035.3 | GEHAEUSEOBERTEIL | 633 |
| 71.353.1635.0 | GEHAEUSEOBERTEIL | 633 |
| 71.353.1635.1 | GEHAEUSEOBERTEIL | 633 |
| 71.353.1635.2 | GEHAEUSEOBERTEIL | 633 |
| 71.353.1635.3 | GEHAEUSEOBERTEIL | 633 |
| 71.353.2435.0 | GEHAEUSEOBERTEIL | 633 |
| 71.353.2435.1 | GEHAEUSEOBERTEIL | 633 |
| 71.353.2435.2 | GEHAEUSEOBERTEIL | 633 |
| 71.353.2435.3 | GEHAEUSEOBERTEIL | 633 |
| 71.354.1035.0 | GEHAEUSEOBERTEIL | 633 |
| 71.354.1035.1 | GEHAEUSEOBERTEIL | 633 |
| 71.354.1035.2 | GEHAEUSEOBERTEIL | 633 |
| 71.354.1035.3 | GEHAEUSEOBERTEIL | 633 |
| 71.354.1635.0 | GEHAEUSEOBERTEIL | 633 |
| 71.354.1635.1 | GEHAEUSEOBERTEIL | 633 |
| 71.354.1635.2 | GEHAEUSEOBERTEIL | 633 |
| 71.354.1635.3 | GEHAEUSEOBERTEIL | 633 |
| 71.354.2435.0 | GEHAEUSEOBERTEIL | 633 |
| 71.354.2435.1 | GEHAEUSEOBERTEIL | 633 |
| 71.354.2435.2 | GEHAEUSEOBERTEIL | 633 |
| 71.354.2435.3 | GEHAEUSEOBERTEIL | 633 |
| 71.372.1035.0 | GEHAEUSEOBERTEIL | 735 |
| 71.372.1035.3 | | 735 |
| 71.372.1635.0 | GEHAEUSEOBERTEIL | 735 |

# contents of part number

# contents PART NUMBER


| Part no. | Type | section / page |
|---|---|---|
| 71.372.1635.3 | | 735 |
| 71.374.2435.0 | | 735 |
| 71.374.2435.3 | | 735 |
| 71.940.1053.3 | ADA.I.GEH.BU.10WL | 667 |
| 71.940.1053.4 | ADA.I.GEH.BU.10WL | 667 |
| 71.940.1653.3 | ADA.I.GEH.BU.16WL | 667 |
| 71.940.1653.4 | ADA.I.GEH.BU.16WL | 667 |
| 71.940.2453.3 | ADA.I.GEH.BU.24WL | 667 |
| 71.940.2453.4 | ADA.I.GEH.BU.24WL | 667 |
| 71.945.1053.3 | ADA.I.GEH.BU.10WR | 667 |
| 71.945.1053.4 | ADA.I.GEH.BU.10WR | 667 |
| 71.945.1653.3 | ADA.I.GEH.BU.16WR | 667 |
| 71.945.1653.4 | ADA.I.GEH.BU.16WR | 667 |
| 71.945.2453.3 | ADA.I.GEH.BU.24WR | 667 |
| 71.945.2453.4 | ADA.I.GEH.BU.24WR | 667 |
| 71.950.1053.3 | ADA.I.GEH.ST.10WL | 667 |
| 71.950.1053.4 | ADA.I.GEH.ST.10WL | 667 |
| 71.950.1653.3 | ADA.I.GEH.ST.16WL | 667 |
| 71.950.1653.4 | ADA.I.GEH.ST.16WL | 667 |
| 71.950.2453.3 | ADA.I.GEH.ST.24WL | 667 |
| 71.950.2453.4 | ADA.I.GEH.ST.24WL | 667 |
| 71.955.1053.3 | ADA.I.GEH.ST.10WR | 667 |
| 71.955.1053.4 | ADA.I.GEH.ST.10WR | 667 |
| 71.955.1653.3 | ADA.I.GEH.ST.16WR | 667 |
| 71.955.1653.4 | ADA.I.GEH.ST.16WR | 667 |
| 71.955.2453.3 | ADA.I.GEH.ST.24WR | 667 |
| 71.955.2453.4 | ADA.I.GEH.ST.24WR | 667 |
| 71.960.0353.3 | ADA.I.GEH.BU. 3WL | 671 |
| 71.960.0353.4 | ADA.I.GEH.BU. 3WL | 671 |
| 71.960.0653.3 | ADA.I.GEH.BU. 6WL | 671 |
| 71.960.0653.4 | ADA.I.GEH.BU. 6WL | 671 |
| 71.960.1053.3 | ADA.I.GEH.BU.10WL | 671 |
| 71.960.1053.4 | ADA.I.GEH.BU.10WL | 671 |
| 71.965.0353.3 | ADA.I.GEH.BU. 3WR | 671 |
| 71.965.0353.4 | ADA.I.GEH.BU. 3WR | 671 |
| 71.965.0653.3 | | 671 |
| 71.965.0653.4 | ADA.I.GEH.BU. 6WR | 671 |
| 71.965.1053.3 | | 671 |
| 71.965.1053.4 | ADA.I.GEH.BU.10WR | 671 |
| 71.970.0353.3 | | 671 |
| 71.970.0353.4 | ADA.I.GEH.ST. 3WL | 671 |
| 71.970.0653.3 | ADA.I.GEH.ST. 6WL | 671 |
| 71.970.0653.4 | ADA.I.GEH.ST. 6WL | 671 |
| 71.970.1053.3 | ADA.I.GEH.ST.10WL | 671 |
| 71.970.1053.4 | ADA.I.GEH.ST.10WL | 671 |
| 71.975.0353.3 | | 671 |
| 71.975.0353.4 | ADA.I.GEH.ST. 3WR | 671 |
| 71.975.0653.3 | ADA.I.GEH.ST. 6WR | 671 |
| 71.975.0653.4 | ADA.I.GEH.ST. 6WR | 671 |
| 71.975.1053.3 | ADA.I.GEH.ST.10WR | 671 |
| 71.975.1053.4 | ADA.I.GEH.ST.10WR | 671 |
| 72.000.0653.0 | KL.ADA. BU. 6WL | 693 |
| 72.005.0653.0 | KL.ADA. BU. 6WR | 693 |
| 72.010.0653.0 | KL.ADA. ST. 6WL | 693 |
| 72.015.0653.0 | KL.ADA. ST. 6WR | 693 |
| 72.100.0653.0 | KL.ADA. BU. 6WL | 655 |
| 72.100.0653.4 | KL.ADA. BU. 6WL | 655 |
| 72.100.1053.0 | KL.ADA. BU.10WL | 655 |
| 72.100.1053.4 | KL.ADA. BU.10WL | 655 |
| 72.100.1653.0 | KL.ADA. BU.16WL | 655 |
| 72.100.1653.4 | KL.ADA. BU.16WL | 655 |
| 72.100.2453.0 | KL.ADA. BU.24WL | 655 |
| 72.100.2453.4 | KL.ADA. BU.24WL | 655 |
| 72.101.0653.0 | KL.ADAP.BUF 6P WL | 655 |
| 72.101.1053.0 | KL.ADAP.BUF10P WL | 655 |
| 72.101.1653.0 | KL.ADAP.BUF16P WL | 655 |
| 72.101.2453.0 | KL.ADAP.BUF24P WL | 655 |
| 72.105.0653.0 | KL.ADA. BU. 6WR | 655 |
| 72.105.0653.4 | KL.ADA. BU. 6WR | 655 |
| 72.105.1053.0 | KL.ADA. BU.10WR | 655 |
| 72.105.1053.4 | KL.ADA. BU.10WR | 655 |
| 72.105.1653.0 | KL.ADA. BU.16WR | 655 |
| 72.105.1653.4 | KL.ADA. BU.16WR | 655 |
| 72.105.2453.0 | KL.ADA. BU.24WR | 655 |
| 72.105.2453.4 | KL.ADA. BU.24WR | 655 |
| 72.106.0653.0 | KL.ADAP.BUF 6P WR | 655 |
| 72.106.1053.0 | KL.ADAP.BUF10P WR | 655 |
| 72.106.1653.0 | KL.ADAP.BUF16P WR | 655 |
| 72.106.2453.0 | KL.ADAP.BUF24P WR | 655 |
| 72.107.1053.0 | KL.ADA. BU.4/6WR | 699 |
| 72.110.0653.0 | KL.ADA. ST. 6WL | 655 |
| 72.110.0653.4 | KL.ADA. ST. 6WL | 655 |
| 72.110.1053.0 | KL.ADA. ST.10WL | 655 |
| 72.110.1053.4 | KL.ADA. ST.10WL | 655 |
| 72.110.1653.0 | KL.ADA. ST.16WL | 655 |
| 72.110.1653.4 | KL.ADA. ST.16WL | 655 |
| 72.110.2453.0 | KL.ADA. ST.24WL | 655 |
| 72.110.2453.4 | KL.ADA. ST.24WL | 655 |
| 72.111.0653.0 | KL.ADAP.STF 6P WL | 655 |
| 72.111.1053.0 | KL.ADAP.STF10P WL | 655 |
| 72.111.1653.0 | KL.ADAP.STF16P WL | 655 |
| 72.111.2453.0 | KL.ADAP.STF24P WL | 655 |
| 72.115.0653.0 | KL.ADA. ST. 6WR | 655 |
| 72.115.0653.4 | KL.ADA. ST. 6WR | 655 |
| 72.115.1053.0 | KL.ADA. ST.10WR | 655 |
| 72.115.1053.4 | KL.ADA. ST.10WR | 655 |
| 72.115.1653.0 | KL.ADA. ST.16WR | 655 |
| 72.115.1653.4 | KL.ADA. ST.16WR | 655 |
| 72.115.2453.0 | KL.ADA. ST.24WR | 655 |
| 72.115.2453.4 | KL.ADA. ST.24WR | 655 |
| 72.116.0653.0 | KL.ADAP.STF 6P WR | 655 |
| 72.116.1053.0 | KL.ADAP.STF10P WR | 655 |
| 72.116.1653.0 | KL.ADAP.STF16P WR | 655 |
| 72.116.2453.0 | KL.ADAP.STF24P WR | 655 |
| 72.117.1053.0 | KL.ADA. ST.4/6WR | 699 |
| 72.200.0653.0 | BUCHSENEINSATZ | 693 |
| 72.203.1253.0 | BU.EINSATZ 3/3/6 | 705 |
| 72.205.0653.0 | BUCHSENEINSATZ | 707 |
| 72.205.1053.0 | BU.EINSATZ 4/6 | 699 |
| 72.205.1253.0 | BU.EINSATZ 6/6 | 703 |
| 72.210.0653.0 | STECKEREINSATZ | 693 |
| 72.213.1253.0 | ST.EINSATZ 3/3/6 | 705 |
| 72.215.0653.0 | STECKEREINSATZ | 707 |
| 72.215.1053.0 | ST.EINSATZ 4/6 | 699 |
| 72.215.1253.0 | ST.EINSATZ 6/6 | 703 |
| 72.250.1635.2 | GEHAEUSEOBERTEIL | 703 |
| 72.250.2435.2 | GEHAEUSEOBERTEIL | 705 |
| 72.300.0653.0 | BUCHSENEINSATZ | 655 |
| 72.300.0653.9 | BU.EIG.ANL. | 767 |
| 72.300.1053.0 | BUCHSENEINSATZ | 655 |
| 72.300.1053.9 | BU.EIG.ANL. | 767 |
| 72.300.1653.0 | BUCHSENEINSATZ | 655 |
| 72.300.1653.9 | BU.EIG.ANL. | 767 |
| 72.300.2453.0 | BUCHSENEINSATZ | 655 |
| 72.300.2453.9 | BU.EIG.ANL. | 767 |
| 72.300.3253.0 | BUCHSENEINSATZ | 655 |
| 72.300.4853.0 | BUCHSENEINSATZ | 655 |
| 72.300.4853.9 | BU.EIG.ANL. | 767 |
| 72.310.0653.0 | STECKEREINSATZ | 655 |
| 72.310.0653.9 | ST.EIG.ANL. | 767 |
| 72.310.1053.0 | STECKEREINSATZ | 655 |
| 72.310.1053.9 | ST.EIG.ANL. | 767 |
| 72.310.1653.0 | STECKEREINSATZ | 655 |
| 72.310.1653.9 | ST.EIG.ANL. | 767 |
| 72.310.2453.0 | STECKEREINSATZ | 655 |
| 72.310.2453.9 | ST.EIG.ANL. | 767 |
| 72.310.3253.0 | STECKEREINSATZ | 655 |
| 72.310.4853.0 | STECKEREINSATZ | 655 |
| 72.310.4853.9 | ST.EIG.ANL. | 767 |
| 72.320.0628.0 | GEHAEUSEUNTERTEIL | 658 |
| 72.320.1028.0 | GEHAEUSEUNTERTEIL | 650 |
| 72.320.1628.0 | GEHAEUSEUNTERTEIL | 650 |
| 72.320.2428.0 | GEHAEUSEUNTERTEIL | 650 |
| 72.325.0628.0 | GEHAEUSEUNTERTEIL | 659 |
| 72.325.1028.0 | GEHAEUSEUNTERTEIL | 651 |
| 72.325.1628.0 | GEHAEUSEUNTERTEIL | 651 |
| 72.325.2428.0 | GEHAEUSEUNTERTEIL | 651 |
| 72.330.0635.0 | GEHAEUSEUNTERTEIL | 658 |
| 72.330.0635.1 | GEHAEUSEUNTERTEIL | 658 |
| 72.330.1035.0 | GEHAEUSEUNTERTEIL | 650 |
| 72.330.1035.1 | GEHAEUSEUNTERTEIL | 650 |
| 72.330.1635.0 | GEHAEUSEUNTERTEIL | 650 |
| 72.330.1635.1 | GEHAEUSEUNTERTEIL | 650 |
| 72.330.2435.0 | GEHAEUSEUNTERTEIL | 650 |
| 72.330.2435.1 | GEHAEUSEUNTERTEIL | 650 |
| 72.331.0635.0 | GEHAEUSEUNTERTEIL | 658 |
| 72.331.0635.1 | GEHAEUSEUNTERTEIL | 658 |
| 72.331.1035.0 | GEHAEUSEUNTERTEIL | 650 |
| 72.331.1035.1 | GEHAEUSEUNTERTEIL | 650 |
| 72.331.1635.0 | GEHAEUSEUNTERTEIL | 650 |
| 72.331.1635.1 | GEHAEUSEUNTERTEIL | 650 |
| 72.331.2435.0 | GEHAEUSEUNTERTEIL | 650 |
| 72.331.2435.1 | GEHAEUSEUNTERTEIL | 650 |
| 72.333.0635.0 | GEHAEUSEUNTERTEIL | 659 |
| 72.333.0635.1 | GEHAEUSEUNTERTEIL | 659 |
| 72.333.1035.0 | GEHAEUSEUNTERTEIL | 651 |
| 72.333.1035.1 | GEHAEUSEUNTERTEIL | 651 |
| 72.333.1635.0 | GEHAEUSEUNTERTEIL | 651 |
| 72.333.1635.1 | GEHAEUSEUNTERTEIL | 651 |
| 72.333.2435.0 | GEHAEUSEUNTERTEIL | 651 |
| 72.333.2435.1 | GEHAEUSEUNTERTEIL | 651 |
| 72.340.0635.0 | GEHAEUSEUNTERTEIL | 659 |
| 72.340.0635.1 | GEHAEUSEUNTERTEIL | 659 |
| 72.340.1035.0 | GEHAEUSEUNTERTEIL | 651 |
| 72.340.1035.1 | GEHAEUSEUNTERTEIL | 651 |
| 72.340.1635.0 | GEHAEUSEUNTERTEIL | 651 |
| 72.340.1635.1 | GEHAEUSEUNTERTEIL | 651 |
| 72.340.2435.0 | GEHAEUSEUNTERTEIL | 651 |
| 72.340.2435.1 | GEHAEUSEUNTERTEIL | 651 |
| 72.341.0635.0 | GEHAEUSEUNTERTEIL | 659 |
| 72.341.0635.1 | GEHAEUSEUNTERTEIL | 659 |
| 72.341.1035.0 | GEHAEUSEUNTERTEIL | 651 |
| 72.341.1035.1 | GEHAEUSEUNTERTEIL | 651 |
| 72.341.1635.0 | GEHAEUSEUNTERTEIL | 651 |
| 72.341.1635.1 | GEHAEUSEUNTERTEIL | 651 |
| 72.341.2435.0 | GEHAEUSEUNTERTEIL | 651 |
| 72.341.2435.1 | GEHAEUSEUNTERTEIL | 651 |
| 72.342.0635.0 | GEHAEUSEUNTERTEIL | 659 |
| 72.342.0635.1 | GEHAEUSEUNTERTEIL | 659 |
| 72.342.1035.0 | GEHAEUSEUNTERTEIL | 651 |
| 72.342.1035.1 | GEHAEUSEUNTERTEIL | 651 |
| 72.342.1635.0 | GEHAEUSEUNTERTEIL | 651 |
| 72.342.1635.1 | GEHAEUSEUNTERTEIL | 651 |
| 72.342.2435.0 | GEHAEUSEUNTERTEIL | 651 |
| 72.342.2435.1 | GEHAEUSEUNTERTEIL | 651 |
| 72.343.0635.0 | GEHAEUSEUNTERTEIL | 659 |
| 72.343.0635.1 | GEHAEUSEUNTERTEIL | 659 |
| 72.343.1035.0 | GEHAEUSEUNTERTEIL | 651 |
| 72.343.1035.1 | GEHAEUSEUNTERTEIL | 651 |
| 72.343.1635.0 | GEHAEUSEUNTERTEIL | 651 |
| 72.343.1635.1 | GEHAEUSEUNTERTEIL | 651 |
| 72.343.2435.0 | GEHAEUSEUNTERTEIL | 651 |
| 72.343.2435.1 | GEHAEUSEUNTERTEIL | 651 |
| 72.350.0635.0 | GEHAEUSEOBERTEIL | 657 |
| 72.350.0635.1 | GEHAEUSEOBERTEIL | 657 |
| 72.350.0635.2 | GEHAEUSEOBERTEIL | 657 |
| 72.350.0635.3 | GEHAEUSEOBERTEIL | 657 |
| 72.350.1035.0 | GEHAEUSEOBERTEIL | 649 |
| 72.350.1035.1 | GEHAEUSEOBERTEIL | 649 |
| 72.350.1035.2 | GEHAEUSEOBERTEIL | 649 |
| 72.350.1035.3 | GEHAEUSEOBERTEIL | 649 |
| 72.350.1635.0 | GEHAEUSEOBERTEIL | 649 |
| 72.350.1635.1 | GEHAEUSEOBERTEIL | 649 |
| 72.350.1635.2 | GEHAEUSEOBERTEIL | 649 |
| 72.350.1635.3 | GEHAEUSEOBERTEIL | 649 |
| 72.350.2435.0 | GEHAEUSEOBERTEIL | 649 |
| 72.350.2435.1 | GEHAEUSEOBERTEIL | 649 |
| 72.350.2435.2 | GEHAEUSEOBERTEIL | 649 |
| 72.350.2435.3 | GEHAEUSEOBERTEIL | 649 |
| 72.351.0635.0 | GEHAEUSEOBERTEIL | 657 |
| 72.351.0635.1 | GEHAEUSEOBERTEIL | 657 |
| 72.351.0635.2 | GEHAEUSEOBERTEIL | 657 |
| 72.351.0635.3 | GEHAEUSEOBERTEIL | 657 |
| 72.351.1035.0 | GEHAEUSEOBERTEIL | 649 |
| 72.351.1035.1 | GEHAEUSEOBERTEIL | 649 |
| 72.351.1035.2 | GEHAEUSEOBERTEIL | 649 |
| 72.351.1035.3 | GEHAEUSEOBERTEIL | 649 |
| 72.351.1635.0 | GEHAEUSEOBERTEIL | 649 |
| 72.351.1635.1 | GEHAEUSEOBERTEIL | 649 |
| 72.351.1635.2 | GEHAEUSEOBERTEIL | 649 |
| 72.351.1635.3 | GEHAEUSEOBERTEIL | 649 |
| 72.351.2435.0 | GEHAEUSEOBERTEIL | 649 |
| 72.351.2435.1 | GEHAEUSEOBERTEIL | 649 |
| 72.351.2435.2 | GEHAEUSEOBERTEIL | 649 |
| 72.351.2435.3 | GEHAEUSEOBERTEIL | 649 |
| 72.352.0635.0 | GEHAEUSEOBERTEIL | 657 |
| 72.352.0635.1 | GEHAEUSEOBERTEIL | 657 |
| 72.352.0635.2 | GEHAEUSEOBERTEIL | 657 |
| 72.352.0635.3 | GEHAEUSEOBERTEIL | 657 |
| 72.352.1035.0 | GEHAEUSEOBERTEIL | 649 |
| 72.352.1035.1 | GEHAEUSEOBERTEIL | 649 |
| 72.352.1035.2 | GEHAEUSEOBERTEIL | 649 |
| 72.352.1035.3 | GEHAEUSEOBERTEIL | 649 |
| 72.352.1635.0 | GEHAEUSEOBERTEIL | 649 |
| 72.352.1635.1 | GEHAEUSEOBERTEIL | 649 |
| 72.352.1635.2 | GEHAEUSEOBERTEIL | 649 |
| 72.352.1635.3 | GEHAEUSEOBERTEIL | 649 |
| 72.352.2435.0 | GEHAEUSEOBERTEIL | 649 |
| 72.352.2435.1 | GEHAEUSEOBERTEIL | 649 |
| 72.352.2435.2 | GEHAEUSEOBERTEIL | 649 |
| 72.352.2435.3 | GEHAEUSEOBERTEIL | 649 |
| 72.353.0635.0 | | 657 |
| 72.353.0635.1 | | 657 |
| 72.353.0635.2 | | 657 |
| 72.353.0635.3 | | 657 |
| 72.353.1035.0 | | 649 |
| 72.353.1035.1 | | 649 |
| 72.353.1035.2 | | 649 |
| 72.353.1035.3 | | 649 |
| 72.353.1635.0 | | 649 |
| 72.353.1635.1 | | 649 |
| 72.353.1635.2 | | 649 |
| 72.353.1635.3 | | 649 |
| 72.353.2435.0 | GEHAEUSEOBERTEIL | 649 |
| 72.353.2435.1 | | 649 |
| 72.353.2435.2 | | 649 |
| 72.353.2435.3 | | 649 |
| 72.354.0635.0 | | 657 |
| 72.354.0635.1 | | 657 |
| 72.354.0635.2 | | 657 |
| 72.354.0635.3 | | 657 |
| 72.354.1035.0 | | 649 |
| 72.354.1035.1 | | 649 |
| 72.354.1035.2 | | 649 |
| 72.354.1035.3 | | 649 |
| 72.354.1635.0 | | 649 |
| 72.354.1635.1 | | 649 |
| 72.354.1635.2 | | 649 |
| 72.354.1635.3 | | 649 |
| 72.354.2435.0 | GEHAEUSEOBERTEIL | 649 |
| 72.354.2435.1 | | 649 |
| 72.354.2435.2 | | 649 |
| 72.354.2435.3 | | 649 |
| 72.355.1035.0 | GEHAEUSEOBERTEIL | 649 |
| 72.355.1035.1 | GEHAEUSEOBERTEIL | 649 |

# contents


| Part no. | Type | section / page |
|---|---|---|
| 72.355.1035.2 | GEHAEUSEOBERTEIL | 649 |
| 72.355.1035.3 | GEHAEUSEOBERTEIL | 649 |
| 72.355.1635.0 | GEHAEUSEOBERTEIL | 649 |
| 72.355.1635.1 | GEHAEUSEOBERTEIL | 649 |
| 72.355.1635.2 | GEHAEUSEOBERTEIL | 649 |
| 72.355.1635.3 | GEHAEUSEOBERTEIL | 649 |
| 72.355.2435.0 | GEHAEUSEOBERTEIL | 649 |
| 72.355.2435.1 | GEHAEUSEOBERTEIL | 649 |
| 72.355.2435.2 | GEHAEUSEOBERTEIL | 649 |
| 72.355.2435.3 | GEHAEUSEOBERTEIL | 649 |
| 72.356.1035.0 | GEHAEUSEOBERTEIL | 649 |
| 72.356.1035.1 | GEHAEUSEOBERTEIL | 649 |
| 72.356.1035.2 | GEHAEUSEOBERTEIL | 649 |
| 72.356.1035.3 | GEHAEUSEOBERTEIL | 649 |
| 72.356.1635.0 | GEHAEUSEOBERTEIL | 649 |
| 72.356.1635.1 | GEHAEUSEOBERTEIL | 649 |
| 72.356.1635.2 | GEHAEUSEOBERTEIL | 649 |
| 72.356.1635.3 | GEHAEUSEOBERTEIL | 649 |
| 72.356.2435.0 | GEHAEUSEOBERTEIL | 649 |
| 72.356.2435.1 | GEHAEUSEOBERTEIL | 649 |
| 72.356.2435.2 | GEHAEUSEOBERTEIL | 649 |
| 72.356.2435.3 | GEHAEUSEOBERTEIL | 649 |
| 72.357.1035.0 | GEHAEUSEOBERTEIL | 649 |
| 72.357.1035.1 | GEHAEUSEOBERTEIL | 649 |
| 72.357.1035.2 | GEHAEUSEOBERTEIL | 649 |
| 72.357.1035.3 | GEHAEUSEOBERTEIL | 649 |
| 72.357.1635.0 | GEHAEUSEOBERTEIL | 649 |
| 72.357.1635.1 | GEHAEUSEOBERTEIL | 649 |
| 72.357.1635.2 | GEHAEUSEOBERTEIL | 649 |
| 72.357.1635.3 | GEHAEUSEOBERTEIL | 649 |
| 72.357.2435.0 | GEHAEUSEOBERTEIL | 649 |
| 72.357.2435.1 | GEHAEUSEOBERTEIL | 649 |
| 72.357.2435.2 | GEHAEUSEOBERTEIL | 649 |
| 72.357.2435.3 | GEHAEUSEOBERTEIL | 649 |
| 72.358.1035.0 | | 649 |
| 72.358.1035.1 | | 649 |
| 72.358.1035.2 | | 649 |
| 72.358.1035.3 | | 649 |
| 72.358.1635.0 | | 649 |
| 72.358.1635.1 | | 649 |
| 72.358.1635.2 | | 649 |
| 72.358.1635.3 | | 649 |
| 72.358.2435.0 | | 649 |
| 72.358.2435.1 | | 649 |
| 72.358.2435.2 | | 649 |
| 72.358.2435.3 | | 649 |
| 72.359.1035.0 | | 649 |
| 72.359.1035.1 | | 649 |
| 72.359.1035.2 | | 649 |
| 72.359.1035.3 | | 649 |
| 72.359.1635.0 | | 649 |
| 72.359.1635.1 | | 649 |
| 72.359.1635.2 | | 649 |
| 72.359.1635.3 | | 649 |
| 72.359.2435.0 | GEHAEUSEOBERTEIL | 649 |
| 72.359.2435.1 | | 649 |
| 72.359.2435.2 | | 649 |
| 72.359.2435.3 | | 649 |
| 72.372.1035.0 | GEHAEUSEOBERTEIL | 733 |
| 72.372.1035.3 | GEHAEUSEOBERTEIL | 733 |
| 72.372.1635.0 | GEHAEUSEOBERTEIL | 733 |
| 72.372.1635.3 | GEHAEUSEOBERTEIL | 733 |
| 72.372.2435.0 | GEHAEUSEOBERTEIL | 733 |
| 72.372.2435.3 | GEHAEUSEOBERTEIL | 733 |
| 72.374.2435.0 | | 733 |
| 72.374.2435.3 | GEHAEUSEOBERTEIL | 733 |
| 72.700.0658.0 | BUCHSENEINSATZ | 655 |
| 72.700.1058.0 | BUCHSENEINSATZ | 655 |
| 72.700.1658.0 | BUCHSENEINSATZ | 655 |
| 72.700.2458.0 | BUCHSENEINSATZ | 655 |
| 72.700.3258.0 | BUCHSENEINSATZ | 655 |
| 72.700.4858.0 | BUCHSENEINSATZ | 655 |
| 72.710.0658.0 | STECKEREINSATZ | 655 |
| 72.710.1058.0 | STECKEREINSATZ | 655 |
| 72.710.1658.0 | STECKEREINSATZ | 655 |
| 72.710.2458.0 | STECKEREINSATZ | 655 |
| 72.710.3258.0 | STECKEREINSATZ | 655 |
| 72.710.4858.0 | STECKEREINSATZ | 655 |
| 72.940.0653.0 | ADA.I.GEH.BU. 6WL | 669 |
| 72.940.0653.4 | | 669 |
| 72.940.1053.0 | ADA.I.GEH.BU.10WL | 669 |
| 72.940.1053.4 | | 669 |
| 72.940.1653.0 | ADA.I.GEH.BU.16WL | 669 |
| 72.940.1653.4 | | 669 |
| 72.940.2453.0 | ADA.I.GEH.BU.24WL | 669 |
| 72.940.2453.4 | | 669 |
| 72.945.0653.0 | ADA.I.GEH.BU. 6WR | 669 |
| 72.945.0653.4 | | 669 |
| 72.945.1053.0 | ADA.I.GEH.BU.10WR | 669 |
| 72.945.1053.4 | | 669 |
| 72.945.1653.0 | ADA.I.GEH.BU.16WR | 669 |
| 72.945.1653.4 | | 669 |
| 72.945.2453.0 | ADA.I.GEH.BU.24WR | 669 |
| 72.945.2453.4 | | 669 |
| 72.950.0653.0 | ADA.I.GEH.ST. 6WL | 669 |
| 72.950.0653.4 | | 669 |
| 72.950.1053.0 | ADA.I.GEH.ST.10WL | 669 |
| 72.950.1053.4 | | 669 |
| 72.950.1653.0 | ADA.I.GEH.ST.16WL | 669 |
| 72.950.1653.4 | | 669 |
| 72.950.2453.0 | ADA.I.GEH.ST.24WL | 669 |
| 72.950.2453.4 | | 669 |
| 72.955.0653.0 | ADA.I.GEH.ST. 6WR | 669 |
| 72.955.0653.4 | | 669 |
| 72.955.1053.0 | ADA.I.GEH.ST.10WR | 669 |
| 72.955.1053.4 | | 669 |
| 72.955.1653.0 | ADA.I.GEH.ST.16WR | 669 |
| 72.955.1653.4 | ADA.I.GEH.ST.16WR | 669 |
| 72.955.2453.0 | ADA.I.GEH.ST.24WR | 669 |
| 72.955.2453.4 | | 669 |
| 73.100.4053.0 | KL.ADA. BU.40WL | 719 |
| 73.100.6453.0 | KL.ADA. BU.64WL | 719 |
| 73.105.4053.0 | KL.ADA. BU.40WR | 719 |
| 73.105.6453.0 | KL.ADA. BU.64WR | 719 |
| 73.110.4053.0 | KL.ADA. ST.40WL | 719 |
| 73.110.6453.0 | KL.ADA. ST.64WL | 719 |
| 73.115.4053.0 | KL.ADA. ST.40WR | 719 |
| 73.115.6453.0 | KL.ADA. ST.64WR | 719 |
| 73.300.0353.0 | BUCHSENEINSATZ | 713 |
| 73.300.0453.0 | BUCHSENEINSATZ | 713 |
| 73.310.0353.0 | STECKEREINSATZ | 713 |
| 73.310.0453.0 | STECKEREINSATZ | 713 |
| 73.326.4028.0 | GEHAEUSEUNTERTEIL | 729 |
| 73.326.6428.0 | GEHAEUSEUNTERTEIL | 729 |
| 73.327.4028.0 | GEHAEUSEUNTERTEIL | 731 |
| 73.327.6428.0 | GEHAEUSEUNTERTEIL | 731 |
| 73.330.4035.0 | GEHAEUSEUNTERTEIL | 729 |
| 73.330.4035.1 | GEHAEUSEUNTERTEIL | 729 |
| 73.330.6435.0 | GEHAEUSEUNTERTEIL | 729 |
| 73.330.6435.1 | GEHAEUSEUNTERTEIL | 729 |
| 73.331.4035.0 | GEHAEUSEUNTERTEIL | 729 |
| 73.331.4035.1 | GEHAEUSEUNTERTEIL | 729 |
| 73.331.6435.0 | GEHAEUSEUNTERTEIL | 729 |
| 73.331.6435.1 | GEHAEUSEUNTERTEIL | 729 |
| 73.333.4035.0 | GEHAEUSEUNTERTEIL | 729 |
| 73.333.4035.1 | GEHAEUSEUNTERTEIL | 729 |
| 73.333.6435.0 | GEHAEUSEUNTERTEIL | 729 |
| 73.333.6435.1 | GEHAEUSEUNTERTEIL | 729 |
| 73.334.4035.0 | GEHAEUSEUNTERTEIL | 638 |
| 73.334.4035.1 | GEHAEUSEUNTERTEIL | 638 |
| 73.334.6435.0 | GEHAEUSEUNTERTEIL | 638 |
| 73.334.6435.1 | GEHAEUSEUNTERTEIL | 638 |
| 73.335.4035.0 | GEHAEUSEUNTERTEIL | 638 |
| 73.335.4035.1 | GEHAEUSEUNTERTEIL | 638 |
| 73.335.6435.0 | GEHAEUSEUNTERTEIL | 638 |
| 73.335.6435.1 | GEHAEUSEUNTERTEIL | 638 |
| 73.337.4035.0 | GEHAEUSEUNTERTEIL | 639 |
| 73.337.4035.1 | GEHAEUSEUNTERTEIL | 639 |
| 73.337.6435.0 | GEHAEUSEUNTERTEIL | 639 |
| 73.337.6435.1 | GEHAEUSEUNTERTEIL | 639 |
| 73.340.4035.0 | GEHAEUSEUNTERTEIL | 731 |
| 73.340.4035.1 | GEHAEUSEUNTERTEIL | 731 |
| 73.340.6435.0 | GEHAEUSEUNTERTEIL | 731 |
| 73.340.6435.1 | GEHAEUSEUNTERTEIL | 731 |
| 73.341.4035.0 | GEHAEUSEUNTERTEIL | 731 |
| 73.341.4035.1 | GEHAEUSEUNTERTEIL | 731 |
| 73.341.6435.0 | GEHAEUSEUNTERTEIL | 731 |
| 73.341.6435.1 | GEHAEUSEUNTERTEIL | 731 |
| 73.342.4035.0 | GEHAEUSEUNTERTEIL | 731 |
| 73.342.4035.1 | GEHAEUSEUNTERTEIL | 731 |
| 73.342.6435.0 | GEHAEUSEUNTERTEIL | 731 |
| 73.342.6435.1 | GEHAEUSEUNTERTEIL | 731 |
| 73.343.4035.0 | GEHAEUSEUNTERTEIL | 731 |
| 73.343.4035.1 | GEHAEUSEUNTERTEIL | 731 |
| 73.343.6435.0 | GEHAEUSEUNTERTEIL | 731 |
| 73.343.6435.1 | GEHAEUSEUNTERTEIL | 731 |
| 73.344.4035.0 | GEHAEUSEUNTERTEIL | 639 |
| 73.344.4035.1 | GEHAEUSEUNTERTEIL | 639 |
| 73.344.6435.0 | GEHAEUSEUNTERTEIL | 639 |
| 73.344.6435.1 | GEHAEUSEUNTERTEIL | 639 |
| 73.345.4035.0 | GEHAEUSEUNTERTEIL | 639 |
| 73.345.4035.1 | GEHAEUSEUNTERTEIL | 639 |
| 73.345.6435.0 | GEHAEUSEUNTERTEIL | 639 |
| 73.345.6435.1 | GEHAEUSEUNTERTEIL | 639 |
| 73.346.4035.0 | GEHAEUSEUNTERTEIL | 639 |
| 73.346.4035.1 | GEHAEUSEUNTERTEIL | 639 |
| 73.346.6435.0 | GEHAEUSEUNTERTEIL | 639 |
| 73.346.6435.1 | GEHAEUSEUNTERTEIL | 639 |
| 73.347.4035.0 | GEHAEUSEUNTERTEIL | 639 |
| 73.347.4035.1 | GEHAEUSEUNTERTEIL | 639 |
| 73.347.6435.0 | GEHAEUSEUNTERTEIL | 639 |
| 73.347.6435.1 | GEHAEUSEUNTERTEIL | 639 |
| 73.350.4035.0 | GEHAEUSEOBERTEIL | 727 |
| 73.350.4035.1 | GEHAEUSEOBERTEIL | 727 |
| 73.350.4035.2 | GEHAEUSEOBERTEIL | 727 |
| 73.350.4035.3 | GEHAEUSEOBERTEIL | 727 |
| 73.350.6435.0 | GEHAEUSEOBERTEIL | 727 |
| 73.350.6435.1 | GEHAEUSEOBERTEIL | 727 |
| 73.350.6435.2 | GEHAEUSEOBERTEIL | 727 |
| 73.350.6435.3 | GEHAEUSEOBERTEIL | 727 |
| 73.352.4035.0 | GEHAEUSEOBERTEIL | 709 |
| 73.352.4035.1 | GEHAEUSEOBERTEIL | 709 |
| 73.352.4035.2 | GEHAEUSEOBERTEIL | 709 |
| 73.352.4035.3 | GEHAEUSEOBERTEIL | 709 |
| 73.352.6435.0 | GEHAEUSEOBERTEIL | 727 |
| 73.352.6435.1 | GEHAEUSEOBERTEIL | 727 |
| 73.352.6435.2 | GEHAEUSEOBERTEIL | 727 |
| 73.352.6435.3 | GEHAEUSEOBERTEIL | 727 |
| 73.353.0645.1 | | 684 |
| 73.353.1035.0 | GEHAEUSEOBERTEIL | 749 |
| 73.353.1035.1 | GEHAEUSEOBERTEIL | 749 |
| 73.353.1035.2 | GEHAEUSEOBERTEIL | 749 |
| 73.353.1035.3 | | 749 |
| 73.353.1045.1 | | 684 |
| 73.353.4035.0 | GEHAEUSEOBERTEIL | 709 |
| 73.353.4035.1 | GEHAEUSEOBERTEIL | 709 |
| 73.353.4035.2 | GEHAEUSEOBERTEIL | 709 |
| 73.353.4035.3 | GEHAEUSEOBERTEIL | 709 |
| 73.353.4045.1 | | 684 |
| 73.353.6435.0 | GEHAEUSEOBERTEIL | 727 |
| 73.353.6435.1 | GEHAEUSEOBERTEIL | 727 |
| 73.353.6435.2 | GEHAEUSEOBERTEIL | 727 |
| 73.353.6435.3 | GEHAEUSEOBERTEIL | 727 |
| 73.353.6445.1 | | 684 |
| 73.354.1035.0 | GEHAEUSEOBERTEIL | 749 |
| 73.354.1035.1 | GEHAEUSEOBERTEIL | 749 |
| 73.354.1035.2 | GEHAEUSEOBERTEIL | 749 |
| 73.354.1035.3 | | 749 |
| 73.354.4035.0 | GEHAEUSEOBERTEIL | 727 |
| 73.354.4035.1 | | 727 |
| 73.354.4035.2 | | 727 |
| 73.354.4035.3 | | 727 |
| 73.354.6435.0 | GEHAEUSEOBERTEIL | 727 |
| 73.354.6435.1 | | 727 |
| 73.354.6435.2 | | 727 |
| 73.354.6435.3 | | 727 |
| 73.355.4035.0 | GEHAEUSEOBERTEIL | 727 |
| 73.355.4035.1 | GEHAEUSEOBERTEIL | 727 |
| 73.355.4035.2 | GEHAEUSEOBERTEIL | 727 |
| 73.355.4035.3 | GEHAEUSEOBERTEIL | 727 |
| 73.355.6435.0 | GEHAEUSEOBERTEIL | 727 |
| 73.355.6435.1 | GEHAEUSEOBERTEIL | 727 |
| 73.355.6435.2 | GEHAEUSEOBERTEIL | 727 |
| 73.355.6435.3 | GEHAEUSEOBERTEIL | 727 |
| 73.357.4035.0 | GEHAEUSEOBERTEIL | 709 |
| 73.357.4035.1 | GEHAEUSEOBERTEIL | 709 |
| 73.357.4035.2 | GEHAEUSEOBERTEIL | 709 |
| 73.357.4035.3 | GEHAEUSEOBERTEIL | 709 |
| 73.357.6435.0 | GEHAEUSEOBERTEIL | 727 |
| 73.357.6435.1 | GEHAEUSEOBERTEIL | 727 |
| 73.357.6435.2 | GEHAEUSEOBERTEIL | 727 |
| 73.357.6435.3 | GEHAEUSEOBERTEIL | 727 |
| 73.358.4035.0 | GEHAEUSEOBERTEIL | 709 |
| 73.358.4035.1 | GEHAEUSEOBERTEIL | 709 |
| 73.358.4035.2 | GEHAEUSEOBERTEIL | 709 |
| 73.358.4035.3 | GEHAEUSEOBERTEIL | 709 |
| 73.358.6435.0 | GEHAEUSEOBERTEIL | 727 |
| 73.358.6435.1 | GEHAEUSEOBERTEIL | 727 |
| 73.358.6435.2 | GEHAEUSEOBERTEIL | 727 |
| 73.358.6435.3 | GEHAEUSEOBERTEIL | 727 |
| 73.359.4035.0 | GEHAEUSEOBERTEIL | 727 |
| 73.359.4035.1 | | 727 |
| 73.359.4035.2 | | 727 |
| 73.359.4035.3 | | 727 |
| 73.359.6435.0 | GEHAEUSEOBERTEIL | 727 |
| 73.359.6435.1 | | 727 |
| 73.359.6435.2 | | 727 |
| 73.359.6435.3 | | 749 |
| 73.700.0753.0 | BUCHSENEINSATZ | 713 |
| 73.700.0853.0 | BUCHSENEINSATZ | 713 |
| 73.700.1553.0 | BUCHSENEINSATZ | 719 |
| 73.700.2553.0 | BUCHSENEINSATZ | 719 |
| 73.700.4058.0 | BUCHSENEINSATZ | 719 |
| 73.700.6458.0 | BUCHSENEINSATZ | 719 |
| 73.710.0753.0 | STECKEREINSATZ | 713 |
| 73.710.0853.0 | STECKEREINSATZ | 713 |
| 73.710.1553.0 | STECKEREINSATZ | 719 |
| 73.710.2553.0 | STECKEREINSATZ | 719 |
| 73.710.4058.0 | STECKEREINSATZ | 719 |
| 73.710.6458.0 | STECKEREINSATZ | 719 |
| 75.012.0053.0 | BUCHSENTEIL | 758 |
| 75.012.5053.0 | STECKERTEIL | 758 |
| 75.013.0051.0 | OBERTEIL | 758 |
| 75.013.0051.2 | OBERTEIL | 758 |
| 75.013.5051.0 | UNTERTEIL | 758 |
| 75.900.0035.0 | GEH.UT. TEIL F | 664 |
| 75.900.0135.0 | GEH.OT. TEIL L | 664 |
| 75.931.1635.0 | GEH.UT. TEIL F | 664 |
| 75.931.2435.0 | GEH.UT. TEIL F | 664 |
| 75.933.1635.0 | GEH.UT. TEIL F | 664 |
| 75.933.2435.0 | GEH.UT. TEIL F | 664 |
| 75.934.2435.0 | GEH.UT. TEIL F | 664 |
| 75.941.1635.0 | GEH.UT. TEIL F | 664 |
| 75.941.2435.0 | GEH.UT. TEIL F | 664 |
| 75.950.1635.0 | GEH.OT. TEIL L | 664 |

# contents of part number

# contents PART NUMBER


| Part no. | Type | section / page |
|---|---|---|
| 75.950.2435.0 | GEH.OT. TEIL L | 664 |
| 75.960.1635.0 | GEH.OT. TEIL L | 664 |
| 75.960.2435.0 | GEH.OT. TEIL L | 664 |
| 76.320.0729.0 | GEHAEUSEUNTERTEIL | 713 |
| 76.320.0753.0 | GEHAEUSEUNTERTEIL | 713 |
| 76.320.1528.0 | GEHAEUSEUNTERTEIL | 723 |
| 76.320.2528.0 | GEHAEUSEUNTERTEIL | 723 |
| 76.321.0729.0 | GEHAEUSEUNTERTEIL | 713 |
| 76.321.0753.0 | GEHAEUSEUNTERTEIL | 713 |
| 76.322.0736.0 | GEHAEUSEUNTERTEIL | 713 |
| 76.322.0736.1 | GEHAEUSEUNTERTEIL | 713 |
| 76.322.0760.1 | GEHAEUSEUNTERTEIL | 713 |
| 76.325.1528.0 | GEHAEUSEUNTERTEIL | 725 |
| 76.325.2528.0 | GEHAEUSEUNTERTEIL | 725 |
| 76.326.4028.0 | GEHAEUSEUNTERTEIL | 723 |
| 76.326.6428.0 | GEHAEUSEUNTERTEIL | 723 |
| 76.327.4028.0 | GEHAEUSEUNTERTEIL | 725 |
| 76.327.6428.0 | GEHAEUSEUNTERTEIL | 725 |
| 76.330.1535.0 | GEHAEUSEUNTERTEIL | 723 |
| 76.330.1535.1 | GEHAEUSEUNTERTEIL | 723 |
| 76.330.2535.0 | GEHAEUSEUNTERTEIL | 723 |
| 76.330.2535.1 | GEHAEUSEUNTERTEIL | 723 |
| 76.330.4035.0 | GEHAEUSEUNTERTEIL | 723 |
| 76.330.4035.1 | GEHAEUSEUNTERTEIL | 723 |
| 76.330.6435.0 | GEHAEUSEUNTERTEIL | 723 |
| 76.330.6435.1 | GEHAEUSEUNTERTEIL | 723 |
| 76.331.1535.0 | GEHAEUSEUNTERTEIL | 723 |
| 76.331.1535.1 | GEHAEUSEUNTERTEIL | 723 |
| 76.331.2535.0 | GEHAEUSEUNTERTEIL | 723 |
| 76.331.2535.1 | GEHAEUSEUNTERTEIL | 723 |
| 76.331.4035.0 | GEHAEUSEUNTERTEIL | 723 |
| 76.331.4035.1 | GEHAEUSEUNTERTEIL | 723 |
| 76.331.6435.0 | GEHAEUSEUNTERTEIL | 723 |
| 76.331.6435.1 | GEHAEUSEUNTERTEIL | 723 |
| 76.333.4035.0 | GEHAEUSEUNTERTEIL | 723 |
| 76.333.4035.1 | GEHAEUSEUNTERTEIL | 723 |
| 76.333.6435.0 | GEHAEUSEUNTERTEIL | 723 |
| 76.333.6435.1 | GEHAEUSEUNTERTEIL | 723 |
| 76.334.1535.0 | GEHAEUSEUNTERTEIL | 723 |
| 76.334.1535.1 | GEHAEUSEUNTERTEIL | 723 |
| 76.334.2535.0 | GEHAEUSEUNTERTEIL | 723 |
| 76.334.2535.1 | GEHAEUSEUNTERTEIL | 723 |
| 76.334.4035.0 | GEHAEUSEUNTERTEIL | 634 |
| 76.334.4035.1 | GEHAEUSEUNTERTEIL | 634 |
| 76.334.6435.0 | GEHAEUSEUNTERTEIL | 634 |
| 76.334.6435.1 | GEHAEUSEUNTERTEIL | 634 |
| 76.335.1535.0 | GEHAEUSEUNTERTEIL | 723 |
| 76.335.1535.1 | GEHAEUSEUNTERTEIL | 723 |
| 76.335.2535.0 | GEHAEUSEUNTERTEIL | 723 |
| 76.335.2535.1 | GEHAEUSEUNTERTEIL | 723 |
| 76.335.4035.0 | GEHAEUSEUNTERTEIL | 634 |
| 76.335.4035.1 | GEHAEUSEUNTERTEIL | 634 |
| 76.335.6435.0 | GEHAEUSEUNTERTEIL | 634 |
| 76.335.6435.1 | GEHAEUSEUNTERTEIL | 634 |
| 76.337.4035.0 | GEHAEUSEUNTERTEIL | 635 |
| 76.337.4035.1 | GEHAEUSEUNTERTEIL | 635 |
| 76.337.6435.0 | GEHAEUSEUNTERTEIL | 635 |
| 76.337.6435.1 | GEHAEUSEUNTERTEIL | 635 |
| 76.340.4035.0 | GEHAEUSEUNTERTEIL | 725 |
| 76.340.4035.1 | | 725 |
| 76.340.6435.0 | GEHAEUSEUNTERTEIL | 725 |
| 76.340.6435.1 | | 725 |
| 76.341.4035.0 | GEHAEUSEUNTERTEIL | 725 |
| 76.341.4035.1 | | 725 |
| 76.341.6435.0 | GEHAEUSEUNTERTEIL | 725 |
| 76.341.6435.1 | | 725 |
| 76.342.4035.0 | GEHAEUSEUNTERTEIL | 725 |
| 76.342.4035.1 | | 725 |
| 76.342.6435.0 | GEHAEUSEUNTERTEIL | 725 |
| 76.342.6435.1 | | 725 |
| 76.343.4035.0 | GEHAEUSEUNTERTEIL | 725 |
| 76.343.4035.1 | | 725 |
| 76.343.6435.0 | GEHAEUSEUNTERTEIL | 725 |
| 76.343.6435.1 | | 725 |
| 76.344.4035.0 | GEHAEUSEUNTERTEIL | 635 |
| 76.344.4035.1 | GEHAEUSEUNTERTEIL | 635 |
| 76.344.6435.0 | GEHAEUSEUNTERTEIL | 635 |
| 76.344.6435.1 | GEHAEUSEUNTERTEIL | 635 |
| 76.345.4035.0 | GEHAEUSEUNTERTEIL | 635 |
| 76.345.4035.1 | GEHAEUSEUNTERTEIL | 635 |
| 76.345.6435.0 | GEHAEUSEUNTERTEIL | 635 |
| 76.345.6435.1 | GEHAEUSEUNTERTEIL | 635 |
| 76.346.4035.0 | GEHAEUSEUNTERTEIL | 635 |
| 76.346.4035.1 | GEHAEUSEUNTERTEIL | 635 |
| 76.346.6435.0 | GEHAEUSEUNTERTEIL | 635 |
| 76.346.6435.1 | GEHAEUSEUNTERTEIL | 635 |
| 76.347.4035.0 | GEHAEUSEUNTERTEIL | 635 |
| 76.347.4035.1 | GEHAEUSEUNTERTEIL | 635 |
| 76.347.6435.0 | GEHAEUSEUNTERTEIL | 635 |
| 76.347.6435.1 | GEHAEUSEUNTERTEIL | 635 |
| 76.350.0736.0 | GEHAEUSEOBERTEIL | 713 |
| 76.350.0736.1 | GEHAEUSEOBERTEIL | 713 |
| 76.350.0760.1 | GEHAEUSEOBERTEIL | 713 |
| 76.350.1535.0 | GEHAEUSEOBERTEIL | 721 |
| 76.350.1535.2 | GEHAEUSEOBERTEIL | 721 |
| 76.350.2535.0 | GEHAEUSEOBERTEIL | 721 |
| 76.350.2535.2 | GEHAEUSEOBERTEIL | 721 |
| 76.350.4035.0 | GEHAEUSEOBERTEIL | 721 |
| 76.350.4035.1 | GEHAEUSEOBERTEIL | 721 |
| 76.350.4035.2 | GEHAEUSEOBERTEIL | 721 |
| 76.350.4035.3 | GEHAEUSEOBERTEIL | 721 |
| 76.350.6435.0 | GEHAEUSEOBERTEIL | 721 |
| 76.350.6435.1 | GEHAEUSEOBERTEIL | 721 |
| 76.350.6435.2 | GEHAEUSEOBERTEIL | 721 |
| 76.350.6435.3 | GEHAEUSEOBERTEIL | 721 |
| 76.352.0736.0 | GEHAEUSEOBERTEIL | 713 |
| 76.352.0736.1 | GEHAEUSEOBERTEIL | 713 |
| 76.352.0760.1 | GEHAEUSEOBERTEIL | 713 |
| 76.352.1535.0 | GEHAEUSEOBERTEIL | 721 |
| 76.352.1535.1 | GEHAEUSEOBERTEIL | 721 |
| 76.352.1535.2 | GEHAEUSEOBERTEIL | 721 |
| 76.352.2535.0 | GEHAEUSEOBERTEIL | 721 |
| 76.352.2535.1 | GEHAEUSEOBERTEIL | 721 |
| 76.352.2535.2 | GEHAEUSEOBERTEIL | 721 |
| 76.352.4035.0 | GEHAEUSEOBERTEIL | 697 |
| 76.352.4035.1 | GEHAEUSEOBERTEIL | 697 |
| 76.352.4035.2 | GEHAEUSEOBERTEIL | 697 |
| 76.352.4035.3 | GEHAEUSEOBERTEIL | 697 |
| 76.352.6435.0 | GEHAEUSEOBERTEIL | 721 |
| 76.352.6435.1 | GEHAEUSEOBERTEIL | 721 |
| 76.352.6435.2 | GEHAEUSEOBERTEIL | 721 |
| 76.352.6435.3 | GEHAEUSEOBERTEIL | 721 |
| 76.353.1535.0 | GEHAEUSEOBERTEIL | 721 |
| 76.353.1535.2 | GEHAEUSEOBERTEIL | 721 |
| 76.353.2535.0 | GEHAEUSEOBERTEIL | 721 |
| 76.353.2535.2 | GEHAEUSEOBERTEIL | 721 |
| 76.353.4035.0 | GEHAEUSEOBERTEIL | 697 |
| 76.353.4035.1 | GEHAEUSEOBERTEIL | 697 |
| 76.353.4035.2 | GEHAEUSEOBERTEIL | 697 |
| 76.353.4035.3 | GEHAEUSEOBERTEIL | 697 |
| 76.353.6435.0 | GEHAEUSEOBERTEIL | 721 |
| 76.353.6435.1 | GEHAEUSEOBERTEIL | 721 |
| 76.353.6435.2 | GEHAEUSEOBERTEIL | 721 |
| 76.353.6435.3 | GEHAEUSEOBERTEIL | 721 |
| 76.354.1535.0 | GEHAEUSEOBERTEIL | 721 |
| 76.354.1535.1 | GEHAEUSEOBERTEIL | 721 |
| 76.354.1535.2 | GEHAEUSEOBERTEIL | 721 |
| 76.354.2535.0 | GEHAEUSEOBERTEIL | 721 |
| 76.354.2535.1 | GEHAEUSEOBERTEIL | 721 |
| 76.354.2535.2 | GEHAEUSEOBERTEIL | 721 |
| 76.354.4035.0 | GEHAEUSEOBERTEIL | 707 |
| 76.354.4035.1 | GEHAEUSEOBERTEIL | 707 |
| 76.354.4035.2 | GEHAEUSEOBERTEIL | 707 |
| 76.354.4035.3 | GEHAEUSEOBERTEIL | 707 |
| 76.354.6435.0 | GEHAEUSEOBERTEIL | 721 |
| 76.354.6435.1 | GEHAEUSEOBERTEIL | 721 |
| 76.354.6435.2 | GEHAEUSEOBERTEIL | 721 |
| 76.354.6435.3 | GEHAEUSEOBERTEIL | 721 |
| 76.372.0736.0 | GEHAEUSEOBERTEIL | 713 |
| 76.372.0736.1 | GEHAEUSEOBERTEIL | 713 |
| 76.372.0760.1 | GEHAEUSEOBERTEIL | 713 |
| 76.372.1535.0 | | 735 |
| 76.372.2535.0 | | 735 |
| 77.320.1028.0 | GEHAEUSEUNTERTEIL | 646 |
| 77.320.1628.0 | GEHAEUSEUNTERTEIL | 646 |
| 77.320.2428.0 | GEHAEUSEUNTERTEIL | 646 |
| 77.325.1028.0 | GEHAEUSEUNTERTEIL | 647 |
| 77.325.1628.0 | GEHAEUSEUNTERTEIL | 647 |
| 77.325.2428.0 | GEHAEUSEUNTERTEIL | 647 |
| 77.330.1035.0 | GEHAEUSEUNTERTEIL | 646 |
| 77.330.1035.1 | GEHAEUSEUNTERTEIL | 646 |
| 77.330.1635.0 | GEHAEUSEUNTERTEIL | 646 |
| 77.330.1635.1 | GEHAEUSEUNTERTEIL | 646 |
| 77.330.2435.0 | GEHAEUSEUNTERTEIL | 646 |
| 77.330.2435.1 | GEHAEUSEUNTERTEIL | 646 |
| 77.331.1035.0 | GEHAEUSEUNTERTEIL | 646 |
| 77.331.1035.1 | GEHAEUSEUNTERTEIL | 646 |
| 77.331.1635.0 | GEHAEUSEUNTERTEIL | 646 |
| 77.331.1635.1 | GEHAEUSEUNTERTEIL | 646 |
| 77.331.2435.0 | GEHAEUSEUNTERTEIL | 646 |
| 77.331.2435.1 | GEHAEUSEUNTERTEIL | 646 |
| 77.333.1035.0 | GEHAEUSEUNTERTEIL | 647 |
| 77.333.1035.1 | GEHAEUSEUNTERTEIL | 647 |
| 77.333.1635.0 | GEHAEUSEUNTERTEIL | 647 |
| 77.333.1635.1 | GEHAEUSEUNTERTEIL | 647 |
| 77.333.2435.0 | GEHAEUSEUNTERTEIL | 647 |
| 77.333.2435.1 | GEHAEUSEUNTERTEIL | 647 |
| 77.340.1035.0 | GEHAEUSEUNTERTEIL | 647 |
| 77.340.1035.1 | GEHAEUSEUNTERTEIL | 647 |
| 77.340.1635.0 | GEHAEUSEUNTERTEIL | 647 |
| 77.340.1635.1 | GEHAEUSEUNTERTEIL | 647 |
| 77.340.2435.0 | GEHAEUSEUNTERTEIL | 647 |
| 77.340.2435.1 | GEHAEUSEUNTERTEIL | 647 |
| 77.341.1035.0 | GEHAEUSEUNTERTEIL | 647 |
| 77.341.1035.1 | GEHAEUSEUNTERTEIL | 647 |
| 77.341.1635.0 | GEHAEUSEUNTERTEIL | 647 |
| 77.341.1635.1 | GEHAEUSEUNTERTEIL | 647 |
| 77.341.2435.0 | GEHAEUSEUNTERTEIL | 647 |
| 77.341.2435.1 | GEHAEUSEUNTERTEIL | 647 |
| 77.342.1035.0 | GEHAEUSEUNTERTEIL | 647 |
| 77.342.1035.1 | GEHAEUSEUNTERTEIL | 647 |
| 77.342.1635.0 | GEHAEUSEUNTERTEIL | 647 |
| 77.342.1635.1 | GEHAEUSEUNTERTEIL | 647 |
| 77.342.2435.0 | GEHAEUSEUNTERTEIL | 647 |
| 77.342.2435.1 | GEHAEUSEUNTERTEIL | 647 |
| 77.343.1035.0 | GEHAEUSEUNTERTEIL | 647 |
| 77.343.1035.1 | GEHAEUSEUNTERTEIL | 647 |
| 77.343.1635.0 | GEHAEUSEUNTERTEIL | 647 |
| 77.343.1635.1 | GEHAEUSEUNTERTEIL | 647 |
| 77.343.2435.0 | GEHAEUSEUNTERTEIL | 647 |
| 77.343.2435.1 | GEHAEUSEUNTERTEIL | 647 |
| 77.350.1035.0 | GEHAEUSEOBERTEIL | 645 |
| 77.350.1035.1 | GEHAEUSEOBERTEIL | 645 |
| 77.350.1035.2 | GEHAEUSEOBERTEIL | 645 |
| 77.350.1035.3 | GEHAEUSEOBERTEIL | 645 |
| 77.350.1635.0 | GEHAEUSEOBERTEIL | 645 |
| 77.350.1635.1 | GEHAEUSEOBERTEIL | 645 |
| 77.350.1635.2 | GEHAEUSEOBERTEIL | 645 |
| 77.350.1635.3 | GEHAEUSEOBERTEIL | 645 |
| 77.350.2435.0 | GEHAEUSEOBERTEIL | 645 |
| 77.350.2435.1 | GEHAEUSEOBERTEIL | 645 |
| 77.350.2435.2 | GEHAEUSEOBERTEIL | 645 |
| 77.350.2435.3 | GEHAEUSEOBERTEIL | 645 |
| 77.351.1035.0 | GEHAEUSEOBERTEIL | 645 |
| 77.351.1035.1 | GEHAEUSEOBERTEIL | 645 |
| 77.351.1035.2 | GEHAEUSEOBERTEIL | 645 |
| 77.351.1035.3 | GEHAEUSEOBERTEIL | 645 |
| 77.351.1635.0 | GEHAEUSEOBERTEIL | 645 |
| 77.351.1635.1 | GEHAEUSEOBERTEIL | 645 |
| 77.351.1635.2 | GEHAEUSEOBERTEIL | 645 |
| 77.351.1635.3 | GEHAEUSEOBERTEIL | 645 |
| 77.351.2435.0 | GEHAEUSEOBERTEIL | 645 |
| 77.351.2435.1 | GEHAEUSEOBERTEIL | 645 |
| 77.351.2435.2 | GEHAEUSEOBERTEIL | 645 |
| 77.351.2435.3 | GEHAEUSEOBERTEIL | 645 |
| 77.352.1035.0 | GEHAEUSEOBERTEIL | 645 |
| 77.352.1035.1 | GEHAEUSEOBERTEIL | 645 |
| 77.352.1035.2 | GEHAEUSEOBERTEIL | 645 |
| 77.352.1035.3 | GEHAEUSEOBERTEIL | 645 |
| 77.352.1635.0 | GEHAEUSEOBERTEIL | 645 |
| 77.352.1635.1 | GEHAEUSEOBERTEIL | 645 |
| 77.352.1635.2 | GEHAEUSEOBERTEIL | 645 |
| 77.352.1635.3 | GEHAEUSEOBERTEIL | 645 |
| 77.352.2435.0 | GEHAEUSEOBERTEIL | 645 |
| 77.352.2435.1 | GEHAEUSEOBERTEIL | 645 |
| 77.352.2435.2 | GEHAEUSEOBERTEIL | 645 |
| 77.352.2435.3 | GEHAEUSEOBERTEIL | 645 |
| 77.353.1035.0 | | 645 |
| 77.353.1035.1 | | 645 |
| 77.353.1035.2 | | 645 |
| 77.353.1035.3 | | 645 |
| 77.353.1635.0 | | 645 |
| 77.353.1635.1 | | 645 |
| 77.353.1635.2 | | 645 |
| 77.353.1635.3 | | 645 |
| 77.353.2435.0 | | 645 |
| 77.353.2435.1 | | 645 |
| 77.353.2435.2 | | 645 |
| 77.353.2435.3 | | 645 |
| 77.354.1035.0 | | 645 |
| 77.354.1035.1 | | 645 |
| 77.354.1035.2 | | 645 |
| 77.354.1035.3 | | 645 |
| 77.354.1635.0 | | 645 |
| 77.354.1635.1 | | 645 |
| 77.354.1635.2 | | 645 |
| 77.354.1635.3 | | 645 |
| 77.354.2435.0 | GEHAEUSEOBERTEIL | 645 |
| 77.354.2435.1 | | 645 |
| 77.354.2435.2 | | 645 |
| 77.354.2435.3 | | 645 |
| 77.372.1035.0 | GEHAEUSEOBERTEIL | 735 |
| 77.372.1035.3 | | 735 |
| 77.372.1635.0 | GEHAEUSEOBERTEIL | 735 |
| 77.372.1635.3 | | 735 |
| 77.374.2435.0 | | 735 |
| 77.374.2435.3 | GEHAEUSEOBERTEIL | 735 |
| 77.940.1053.0 | ADA.I.GEH.BU.10WL | 669 |
| 77.940.1053.4 | | 669 |
| 77.940.1653.0 | ADA.I.GEH.BU.16WL | 669 |
| 77.940.1653.4 | | 669 |
| 77.940.2453.0 | ADA.I.GEH.BU.24WL | 669 |
| 77.940.2453.4 | | 669 |
| 77.945.1053.0 | ADA.I.GEH.BU.10WR | 669 |
| 77.945.1053.4 | | 669 |
| 77.945.1653.0 | ADA.I.GEH.BU.16WR | 669 |
| 77.945.1653.4 | | 669 |
| 77.945.2453.0 | ADA.I.GEH.BU.24WR | 669 |
| 77.945.2453.4 | | 669 |
| 77.950.1053.0 | ADA.I.GEH.ST.10WL | 669 |
| 77.950.1053.4 | | 669 |
| 77.950.1653.0 | ADA.I.GEH.ST.16WL | 669 |
| 77.950.1653.4 | | 669 |
| 77.950.2453.0 | ADA.I.GEH.ST.24WL | 669 |
| 77.950.2453.4 | | 669 |

# contents


| Part no. | Type | section / page |
|---|---|---|
| 77.955.1053.0 | ADA.I.GEH.ST.10WR | 669 |
| 77.955.1053.4 | | 669 |
| 77.955.1653.0 | ADA.I.GEH.ST.16WR | 669 |
| 77.955.1653.4 | | 669 |
| 77.955.2453.0 | ADA.I.GEH.ST.24WR | 669 |
| 77.955.2453.4 | | 669 |
| 78.000.0653.0 | REVOS MOD.RAHM.BU | 742 |
| 78.000.1053.0 | REVOS MOD.RAHM.BU | 739 |
| 78.000.1653.0 | REVOS MOD.RAHM.BU | 742 |
| 78.000.2453.0 | REVOS MOD.RAHM.BU | 742 |
| 78.001.2053.0 | REVOS MODULBU.20P | 740 |
| 78.002.1053.0 | REVOS MODULBU.10P | 740 |
| 78.003.0453.0 | REVOS MODULBU. 4P | 740 |
| 78.003.0553.0 | REVOS MODULBU. 5P | 740 |
| 78.004.0353.0 | REVOS MODULBU. 3P | 739 |
| 78.010.0653.0 | REVOS MOD.RAHM.ST | 742 |
| 78.010.1053.0 | REVOS MOD.RAHM.ST | 739 |
| 78.010.1653.0 | REVOS MOD.RAHM.ST | 742 |
| 78.010.2453.0 | REVOS MOD.RAHM.ST | 742 |
| 78.011.2053.0 | REVOS MODULST.20P | 740 |
| 78.012.1053.0 | REVOS MODULST.10P | 740 |
| 78.013.0453.0 | REVOS MODULST. 4P | 740 |
| 78.013.0553.0 | REVOS MODULST. 5P | 740 |
| 78.014.0353.0 | REVOS MODULST. 3P | 739 |
| 80.010.0005.0 | WRS-REL-1S-250V5A | 460 |
| 80.010.0007.0 | WRS-REL-1S-48V20M | 460 |
| 80.010.0008.0 | WRS-REL-1W-250V5A | 460 |
| 80.010.0009.0 | WRS-REL-1W-48V20M | 460 |
| 80.010.0010.0 | WRS-REL-1W-250V16 | 461 |
| 80.010.0011.0 | WR1-230-1W-250V4A | 456 |
| 80.010.1002.0 | WRS-REL-2W-48V20M | 461 |
| 80.010.1003.0 | WRS-REL-2W-250V5A | 461 |
| 80.010.1100.0 | WR1-DUO-2W-250V5A | 458 |
| 80.010.1102.0 | WR4-115-1W-250V4A | 456 |
| 80.010.1104.0 | WR4-115-2W-250V4A | 458 |
| 80.010.1106.0 | WR4-230-1W-250V4A | 457 |
| 80.010.1108.0 | WR4-230-2W-250V4A | 459 |
| 80.010.1110.0 | WR8-115-1W-250V4A | 456 |
| 80.010.1112.0 | WR8-115-2W-250V4A | 458 |
| 80.010.1114.0 | WR8-230-1W-250V4A | 457 |
| 80.010.1116.0 | WR8-230-2W-250V4A | 459 |
| 80.010.4005.0 | FLARE-24V-1W-48V20M | 442 |
| 80.010.4100.0 | FLARE-24DC-1W-250V6A-F | 442 |
| 80.010.4101.0 | FLARE-24V-1S-250V6A-HA | 446 |
| 80.010.4103.0 | FLARE-24DC-2W-250V6A-F | 443 |
| 80.010.4105.0 | FLARE-24V-1W-48V20M-F | 442 |
| 80.010.4106.0 | FLARE-12DC-1W-250V6A-F | 442 |
| 80.010.4120.0 | FLARE-24V-1W-250V6A-CUT | 446 |
| 80.010.4131.0 | FLARE-110V-1W-250V6A-F | 442 |
| 80.010.4141.0 | FLARE-230V-1W-250V6A-F | 442 |
| 80.020.0004.0 | WRS-SSAC1-250V6A | 481 |
| 80.020.2001.0 | WRS-SSAC1-250V4A | 481 |
| 80.020.2003.0 | WRS-SSDC-60V3A | 480 |
| 80.020.2004.0 | WRS-SSDC-60V5A | 480 |
| 80.020.4100.0 | FLARE-24VDC/48VDC-0,5A | 478 |
| 80.020.4101.0 | FLARE-24VDC/48VDC-2A | 478 |
| 80.020.4102.0 | FLARE-115V/48VDC-0,5A | 478 |
| 80.020.4103.0 | FLARE-230VAC/48VDC-0,5A | 479 |
| 80.020.4150.0 | FLARE-24VDC/230VAC-0,5A | 479 |
| 80.020.6000.0 | CEMOS-SSAC3-400V-2A | 537 |
| 80.020.6003.0 | CEMOS-SSPHC-400V-2,5A | 537 |
| 80.060.0000.1 | DIPOS UMC 12,5 | 582 |
| 80.060.0001.1 | DIPOS UMC 12,5 | 582 |
| 80.060.0010.1 | DIPOS PT100 | 499 |
| 80.060.0011.1 | DIPOS PT100 | 499 |
| 80.060.0020.1 | DIPOS KSQ | 508 |
| 80.060.0021.1 | DIPOS KSQ | 508 |
| 80.060.0030.1 | DIPOS TC | 500 |
| 80.060.0031.1 | DIPOS TC | 500 |
| 80.060.1000.1 | | 582 |
| 80.060.1001.1 | | 582 |
| 80.060.2000.1 | | 583 |
| 80.060.2001.1 | | 583 |
| 80.061.0010.3 | dipos EM | 582 |
| 80.061.1010.3 | | 582 |
| 80.061.2010.3 | | 583 |
| 80.063.4001.1 | | 444 |
| 80.063.4009.1 | | 444 |
| 80.063.4021.1 | | 444 |
| 80.063.4023.1 | | 444 |
| 80.063.4025.1 | | 444 |
| 80.063.4026.1 | | 444 |
| 80.063.4029.3 | FLARE MOVE BZ SERIE 38 | 444 |
| 80.063.4031.0 | | 444 |
| 80.063.4031.1 | | 444 |
| 80.063.4032.0 | | 444 |
| 80.063.4032.1 | | 444 |
| 80.063.4034.0 | | 445 |
| 80.063.4034.1 | | 445 |
| 80.063.4129.3 | FLARE MOVE BM SERIE 38 | 444 |
| 81.000.1000.0 | BGL-25VAC-2,5ADC | 526 |
| 81.000.3000.0 | WRS-T115/230-300M | 524 |
| 81.000.3010.0 | WPS-115/230-24V1A | 524 |
| 81.000.6010.0 | WIPOS 24VDC/2,0A 1PH V | 518 |
| 81.000.6030.0 | WIPOS 24VDC/5,0A 1PH V | 518 |
| 81.000.6031.0 | WIPOS 24VDC/5,0A 1PH H | 520 |
| 81.000.6040.0 | WIPOS 24VDC/10A 1PH V | 519 |
| 81.000.6041.0 | WIPOS 24VDC/10A 1PH H | 520 |
| 81.000.6050.0 | WIPOS 24VDC/20A 1PH V | 519 |
| 81.000.6051.0 | WIPOS 24VDC/20A 1PH H | 521 |
| 81.000.6053.0 | WIPOS 24VDC/20A 3PH H | 522 |
| 81.000.6063.0 | WIPOS 24VDC/40A 3PH H | 522 |
| 81.010.1000.0 | DRA-400V-250V3A | 543 |
| 81.020.3000.0 | WRS-TIMER-250V5A | 463 |
| 81.020.4100.0 | FLARE-TIMER-S-250V6A | 462 |
| 81.020.4101.0 | FLARE-PID/0100-S-250V6A | 462 |
| 81.020.4102.0 | FLARE-PID/0060-S-250V6A | 462 |
| 82.011.3004.0 | DIPOS PT100-3 0-400C | 499 |
| 82.011.30XX.0 | | 499 |
| 82.011.37XX.0 | | 499 |
| 82.011.38XX.0 | | 499 |
| 82.011.40XX.0 | | 499 |
| 82.011.47XX.0 | | 499 |
| 82.011.48XX.0 | | 499 |
| 82.021.08XX.0 | | 500 |
| 82.021.1812.0 | DIPOS TC-K 0-1200C | 500 |
| 82.021.18XX.0 | | 500 |
| 82.081.0000.0 | DIPOS KSQ 9.5 .. 10.5V | 508 |
| 83.030.0000.1 | RICOS BC-DP | 410 |
| 83.030.0001.1 | RICOS EC-DP | 414 |
| 83.030.0010.0 | RICOS SOCKET KNOT-DP | 410 |
| 83.030.0011.0 | RICOS SOCKET FINAL-DP | 410 |
| 83.030.0012.0 | | 410 |
| 83.030.1000.1 | RICOS DP 16 I | 428 |
| 83.030.1100.1 | RICOS DP 8 I/0 | 428 |
| 83.030.1200.1 | RICOS DP 16 O | 428 |
| 83.030.1300.1 | RICOS DP 8I 8I/0 | 428 |
| 83.031.0000.1 | RICOS BC-S | 410 |
| 83.031.0001.1 | RICOS EC-S | 414 |
| 83.031.0010.0 | RICOS SOCKET FEMALE-S | 410 |
| 83.031.0011.0 | RICOS SOCKET MALE-S | 410 |
| 83.031.1000.1 | RICOS S 16 I | 428 |
| 83.031.1100.1 | RICOS S 8 I/0 | 428 |
| 83.031.1200.1 | RICOS S 16 O | 428 |
| 83.031.1300.1 | RICOS S 8I 8I/0 | 428 |
| 83.032.0000.1 | RICOS BC-CAN-DN | 411 |
| 83.032.0001.1 | RICOS EC-CAN-DN | 415 |
| 83.032.1000.1 | RICOS CAN-DN 16 I | 429 |
| 83.032.1100.1 | RICOS CAN-DN 8 I/0 | 429 |
| 83.032.1200.1 | RICOS CAN-DN 16 O | 429 |
| 83.032.1300.1 | RICOS CAN-DN 8I 8I/0 | 429 |
| 83.033.0000.1 | RICOS BC-CANOPEN | 411 |
| 83.033.0001.1 | RICOS EC-CANOPEN | 415 |
| 83.033.1000.1 | RICOS CANOPEN 16 I | 429 |
| 83.033.1100.1 | RICOS CANOPEN 8 I/0 | 429 |
| 83.033.1200.1 | RICOS CANOPEN 16 O | 429 |
| 83.033.1300.1 | RICOS CANOPEN 8I 8I/0 | 429 |
| 83.034.0000.1 | | 412 |
| 83.035.1210.1 | | 420 |
| 83.035.3000.1 | RICOS 16 I | 416 |
| 83.035.3005.1 | | 420 |
| 83.035.3100.1 | RICOS 8 I/O | 416 |
| 83.035.3200.1 | RICOS 16 O | 419 |
| 83.035.3300.1 | RICOS 8I 8I/O | 419 |
| 83.035.4000.1 | RICOS 4AI / +-10V | 424 |
| 83.035.4001.1 | RICOS 4AI / 10V | 424 |
| 83.035.4010.1 | RICOS 4AI / 20MA | 426 |
| 83.035.4040.1 | RICOS 4AI / PT100 | 423 |
| 83.035.4050.1 | RICOS 4AI / TC | 423 |
| 83.035.4100.1 | RICOS 4AI4AO / +-10V | 425 |
| 83.035.4101.1 | RICOS 4AI4AO / 10V | 425 |
| 83.035.4110.1 | RICOS 4AI4AO / 20MA | 427 |
| 83.035.4111.1 | RICOS 4AI4AO / 4-20MA | 427 |
| 83.035.5000.1 | RICOS 4I AC 115V | 417 |
| 83.035.5005.1 | RICOS 4I AC 230V | 417 |
| 83.035.5200.1 | RICOS 4O RELAY | 418 |
| 83.035.5400.1 | RICOS COUNTER | 422 |
| 83.035.5410.1 | RICOS POSITION | 422 |
| 83.039.0000.0 | | 416 |
| 83.039.0000.0 | RICOS PV-A | 416 |
| 83.039.0000.1 | | 418 |
| 86.010.0053.0 | WEB1001 LEERG.B1 | 584 |
| 86.020.0053.0 | WEB1001 LEERG.B2 | 584 |
| 86.030.0053.0 | WEB1001 LEERG.B3 | 585 |
| 86.030.6353.0 | DNU-H-400V-250V4A | 542 |
| 86.040.0053.0 | WEB1001 LEERG.B4 | 585 |
| 87.010.0053.0 | WEB1001 LEERG.B1 | 584 |
| 87.010.2053.0 | SSM-7E230V | 541 |
| 87.010.7453.0 | SBS-4SI-230V6,3A | 540 |
| 87.010.7653.0 | SBS-4SI-24V6,3A | 540 |
| 87.020.0053.0 | WEB1001 LEERG.B2 | 584 |
| 87.030.0053.0 | WEB1001 LEERG B3 | 585 |
| 87.030.1053.0 | SSM-7E230V-250V5A | 541 |
| 87.030.6353.0 | DNU-U-400V-250V4A | 542 |
| 87.030.6453.0 | DSU-400V-250V4A | 542 |
| 87.040.0053.0 | WEB1001 LEERG.B4 | 585 |
| 87.040.3053.0 | LPB-14L-250V1A | 540 |
| 87.060.0053.0 | WEB1001 LEERG.B6 | 586 |
| 87.070.0053.0 | WEB1001 LEERG.B7 | 586 |
| 87.080.0053.0 | WEB1001 LEERG.B8 | 587 |
| 87.090.0053.0 | WEB1001 LEERG.B9 | 587 |
| 87.110.6253.0 | TMS-101-250V5A | 539 |
| 87.200.2200.3 | BUCHSE D-SUB 9 | 560 |
| 87.200.2201.3 | BUCHSE D-SUB 15 | 560 |
| 87.200.2202.3 | BUCHSE D-SUB 25 | 560 |
| 87.200.2203.3 | BUCHSE D-SUB 37 | 560 |
| 87.200.2204.3 | BUCHSE D-SUB 50 | 560 |
| 87.200.2205.3 | STECKER D-SUB 9 | 560 |
| 87.200.2206.3 | STECKER D-SUB 15 | 560 |
| 87.200.2207.3 | STECKER D-SUB 25 | 560 |
| 87.200.2208.3 | STECKER D-SUB 37 | 560 |
| 87.200.2209.3 | STECKER D-SUB 50 | 560 |
| 87.210.2201.3 | FLK-SR 10 | 561 |
| 87.210.2202.3 | FLK-SR 14 | 561 |
| 87.210.2203.3 | FLK-SR 16 | 561 |
| 87.210.2204.3 | FLK-SR 20 | 561 |
| 87.210.2205.3 | FLK-SR 26 | 561 |
| 87.210.2207.3 | FLK-SR 34 | 561 |
| 87.210.2208.3 | FLK-SR 40 | 561 |
| 87.210.2210.3 | FLK-SR 50 | 561 |
| 87.210.2211.3 | FLK-SR 60 | 561 |
| 87.210.2212.3 | FLK-SR 64 | 561 |
| 87.220.0753.3 | M - PB 4 SP | 482 |
| 87.220.0853.3 | M - PB 8 SP | 482 |
| 87.220.1353.3 | M - PB 1 SR | 482 |
| 87.220.1453.3 | M - PB 4 SG | 483 |
| 87.220.1553.3 | M - PB 8 SG | 483 |
| 87.220.1853.0 | RAB - SS 4 | 454 |
| 87.220.1953.3 | RAB-FSS 8 | 454 |
| 87.220.2253.3 | RAB-FSS 16 | 454 |
| 87.220.4753.3 | RAB - SS 4/2 | 455 |
| 87.220.4853.3 | RAB - SS 8/2 | 455 |
| 87.220.7553.0 | R12- 12V-W-LED | 454 |
| 87.221.5553.0 | RAB - SS 4 M | 454 |
| 87.221.5853.0 | FRONTSTECKER 115 | 562 |
| 87.221.5953.0 | EAS-UE/D-115 | 562 |
| 87.221.6053.0 | EAS-UE/D-L-115 | 562 |
| 87.221.6353.0 | UEBERGABE UNIVERSAL-S5 | 563 |
| 87.221.6653.0 | RAB - FS16 W A-S5 | 566 |
| 87.221.6753.0 | RAB - FS16 W B-S5 | 566 |
| 87.222.5853.0 | FRONTSTECKER 135/150 | 564 |
| 87.222.5953.0 | EAS-UE / D-135 | 564 |
| 87.222.6053.0 | EAS-UE / D-L-135 | 564 |
| 87.222.6353.0 | UEBERGABE UNIVERSAL-S5 | 565 |
| 87.230.0453.0 | FSR-25VAC-5V1A | 528 |
| 87.230.0553.0 | FSR-25VAC-12V1A | 528 |
| 87.230.0653.0 | FSR-25VAC-15V1A | 528 |
| 87.230.0753.0 | FSR-28VAC-24V1A | 528 |
| 87.230.1553.0 | WPS-T115/230-60VA | 525 |
| 87.230.2053.0 | BGL-40VAC-3ADC | 526 |
| 90.100.0554.0 | 300 | 182 |
| 90.100.0754.0 | 301 | 182 |
| 90.100.0854.0 | 303 | 182 |
| 90.100.1054.0 | 305 | 182 |
| 90.100.1154.0 | 300 B | 182 |
| 90.100.1254.0 | 300 K | 182 |
| 90.100.1354.0 | 300 B K | 182 |
| 90.100.1454.0 | 301 K | 182 |
| 90.100.1554.0 | 303 K | 182 |
| 90.100.1654.0 | 305 K | 182 |
| 90.800.1055.1 | 319 / 13.5 K SCHW. | 182 |
| 90.800.1055.8 | 319 / 13.5 K ELFB. | 182 |
| 90.800.2055.1 | 319 / 17.5 K SCHW. | 182 |
| 90.800.2055.8 | 319 / 17.5 K ELFB. | 182 |
| 90.810.3055.0 | 315 GK | 182 |
| 90.811.3055.0 | 315 GC | 182 |
| 93.001.1055.0 | ST28/10 B/V0 | 219 |
| 93.002.1055.0 | ST28/10 S/V0 | 219 |
| 93.003.1055.0 | ST28/10 BS/V0 | 219 |
| 93.004.0056.0 | RSV 2 GRAU | 207 |
| 93.004.0056.6 | RSV 2 BLAU | 207 |
| 93.031.2055.0 | ST25/5 B/V0 | 218 |
| 93.032.2055.0 | ST25/5 S/V0 | 218 |
| 93.032.2455.0 | ST25/5 SV/V0 | 218 |
| 93.101.2053.0 | ST29/10 BC | 320 |
| 93.102.0055.0 | ST29/10 S/V0 | 205 |
| 95.000.0006.0 | | 801 |
| 95.000.0007.0 | | 801 |
| 95.000.0008.0 | | 801 |
| 95.101.0612.0 | CZ 0,5 -2,5 MM2 F.RV2/S | 207 |
| 95.101.0800.0 | GRUNDZANGE | 291 |
| 95.101.0800.0 | GRUNDZANGE | 631 |
| 95.101.0800.0 | GRUNDZANGE | 798 |
| 95.101.0900.0 | PRESSWERKZEUG | 798 |
| 95.101.1000.0 | PRESSWERKZEUG | 798 |
| 95.101.1100.0 | PRESSWERKZEUG | 799 |
| 95.101.1200.0 | PRESSWERKZEUG | 799 |
| 95.350.0100.0 | ABISOLIERZANGE | 799 |
| 95.502.0000.0 | BEZEICHNUNGS-COMPUTER | 90 |
| 95.502.0100.0 | | 49 |
| 95.502.0118.0 | | 49 |
| 95.502.0125.0 | TUSCHESTIFT 0.25 | 49 |
| 95.502.0135.0 | TUSCHESTIFT 0.35 | 49 |
| 95.502.0150.0 | | 49 |
| 95.502.0170.0 | | 49 |

# contents of part number

# contents PART NUMBER


| Part no. | Type | section / page |
|---|---|---|
| 95.502.0197.0 | | 49 |
| 95.502.0198.0 | | 49 |
| 95.502.0199.0 | | 49 |
| 95.502.0230.0 | | 49 |
| 95.502.0234.0 | | 49 |
| 95.502.0270.0 | | 49 |
| 95.502.0274.0 | | 49 |
| 95.502.0425.0 | | 49 |
| 95.502.0435.0 | | 49 |
| 95.502.0450.0 | | 49 |
| 95.502.0470.0 | | 49 |
| 95.502.0602.0 | | 49 |
| 95.502.0621.0 | | 49 |
| 95.502.0622.0 | | 49 |
| 95.502.0623.0 | | 49 |
| 95.502.0624.0 | | 49 |
| 98.060.0000.0 | 1039 M | 263 |
| 98.090.0000.0 | 9021/15X5,5EN60715 | 171 |
| 98.090.0000.0 | 9021/15X5,5EN60715 | 802 |
| 98.090.0015.0 | 9021/15X5,5EN60715 | 40 |
| 98.090.0015.0 | 9021/15X5,5EN60715 | 802 |
| 98.095.3000.0 | | 802 |
| 98.190.0000.0 | 9006 EN 60715 - G 32 | 102 |
| 98.190.0000.0 | 9006 EN 60715 - G 32 | 584 |
| 98.190.0000.0 | 9006 EN 60715 - G 32 | 802 |
| 98.190.1000.0 | 9006 GELOCHT | 171 |
| 98.190.1000.0 | 9006 GELOCHT | 802 |
| 98.210.0000.0 | 9006 AL 32 | 171 |
| 98.210.0000.0 | 9006 AL 32 | 802 |
| 98.220.0000.0 | 9006 CU EN 60715 - G 32 | 110 |
| 98.220.0000.0 | 9006 CU EN 60715 - G 32 | 802 |
| 98.290.0000.0 | 9813 M 10X 3 1000MM | 72 |
| 98.290.1000.0 | 9813 M SN 10X3 1000MM | 24 |
| 98.291.1000.0 | 18 X 3 M SN 1000MM | 213 |
| 98.300.0000.0 | 35X27X7,5 EN 60715 2M | 20 |
| 98.300.0000.0 | 35X27X7,5 EN 60715 2M | 308 |
| 98.300.0000.0 | 35X27X7,5 EN 60715 2M | 584 |
| 98.300.0000.0 | 35X27X7,5 EN 60715 2M | 803 |
| 98.300.0010.0 | 35x27x7,5 EN60715 BLANK | 46 |
| 98.300.1000.0 | 35X27X 7,5 GELOCHT | 19 |
| 98.300.1000.0 | 35X27X 7,5 GELOCHT | 803 |
| 98.305.1000.0 | 35X27X7,5 EN 60715 1M | 803 |
| 98.310.0000.0 | TRAGSCHIENE 2M | 215 |
| 98.320.0000.0 | 6 X 6 2000MM | 216 |
| 98.325.1000.0 | 6 X 6 1000MM | 216 |
| 98.360.0000.0 | 35 X 24 X 15 EN 60715 | 20 |
| 98.360.0000.0 | 35 X 24 X 15 EN 60715 | 308 |
| 98.360.0000.0 | 35 X 24 X 15 EN 60715 | 584 |
| 98.360.0000.0 | 35 X 24 X 15 EN 60715 | 803 |
| 98.360.0004.0 | 35x24x15 EN 60715 FZN | 46 |
| 98.370.0000.0 | 35 X 27 X 15 | 38 |
| 98.370.0000.0 | 35 X 27 X 15 | 803 |
| 98.370.1000.0 | 35 X 27 X 15 GELOCHT 2M | 46 |
| 98.370.1000.0 | 35 X 27 X 15 GELOCHT 2M | 803 |
| 98.375.1000.0 | 35 X 27 X 15 GELOCHT 1M | 803 |
| 98.380.0000.0 | 35X24X15 EN60715 CU | 47 |
| 98.380.0000.0 | 35X24X15 EN60715 CU | 803 |
| 98.400.0000.0 | ANKERSCHIENE 2M | 210 |
| 99.000.0920.8 | 9705A/6,7/ 12 B 1- 9 | 790 |
| 99.002.0920.8 | 9705A/6,7/2X 6 B 1- 6 | 790 |
| 99.003.0920.8 | 9705A/6,7/ 12 B 1-10 | 790 |
| 99.004.0920.8 | 9705A/6,7/2X12 B 1-16 | 790 |
| 99.005.0920.8 | 9705A/6,7/2X12 B 1-24 | 790 |
| 99.202.9996.0 | 8113 S / 2 G OB GR OF | 297 |
| 99.202.9996.2 | 8213 S / 2 W OB GR OF | 299 |
| 99.203.9996.0 | 8113 S / 3 G OB GR OF | 297 |
| 99.203.9996.2 | 8213 S / 3 W OB GR OF | 299 |
| 99.204.9996.0 | 8113 S / 4 G OB GR OF | 297 |
| 99.204.9996.2 | 8213 S / 4 W OB GR OF | 299 |
| 99.205.9996.0 | 8113 S / 5 G OB GR OF | 297 |
| 99.205.9996.2 | 8213 S / 5 W OB GR OF | 299 |
| 99.206.9996.0 | 8113 S / 6 G OB GR OF | 297 |
| 99.206.9996.2 | 8213 S / 6 W OB GR OF | 299 |
| 99.207.9996.0 | 8113 S / 7 G OB GR OF | 297 |
| 99.207.9996.2 | 8213 S / 7 W OB GR OF | 299 |
| 99.208.9996.0 | 8113 S / 8 G OB GR OF | 297 |
| 99.208.9996.2 | 8213 S / 8 W OB GR OF | 299 |
| 99.209.9996.0 | 8113 S / 9 G OB GR OF | 297 |
| 99.209.9996.2 | 8213 S / 9 W OB GR OF | 299 |
| 99.210.9996.0 | 8113 S / 10 G OB GR OF | 297 |
| 99.210.9996.2 | 8213 S / 10 W OB GR OF | 299 |
| 99.211.9996.0 | 8113 S / 11 G OB GR OF | 297 |
| 99.211.9996.2 | 8213 S / 11 W OB GR OF | 299 |
| 99.212.9996.0 | 8113 S / 12 G OB GR OF | 297 |
| 99.212.9996.2 | 8213 S / 12 W OB GR OF | 299 |
| 99.213.9996.0 | 8113 S / 13 G OB GR OF | 297 |
| 99.213.9996.2 | 8213 S / 13 W OB GR OF | 299 |
| 99.214.9996.0 | 8113 S / 14 GOF OB | 297 |
| 99.214.9996.2 | 8213 S / 14 W OB GR OF | 299 |
| 99.215.9996.0 | 8113 S / 15 G OB GR OF | 297 |
| 99.215.9996.2 | 8213 S / 15 W OB GR OF | 299 |
| 99.216.9996.0 | 8113 S / 16 G OB GR OF | 297 |
| 99.216.9996.2 | 8213 S / 16 W OB GR OF | 299 |
| 99.232.9996.1 | 8213 S / 2 G OB GR OF | 297 |
| 99.233.9996.1 | 8213 S / 3 G OB GR OF | 297 |
| 99.234.9996.1 | 8213 S / 4 G OB GR OF | 297 |
| 99.235.9996.1 | 8213 S / 5 G OB GR OF | 297 |
| 99.236.9996.1 | 8213 S / 6 G OB GR OF | 297 |
| 99.237.9996.1 | 8213 S / 7 G OB GR OF | 297 |
| 99.238.9996.1 | 8213 S / 8 G OB GR OF | 297 |
| 99.239.3564.7 | 9526832 | 385 |
| 99.239.9996.1 | 8213 S / 9 G OB GR OF | 297 |
| 99.240.9996.1 | 8213 S / 10 G OB GR OF | 297 |
| 99.241.9996.1 | 8213 S / 11 G OB GR OF | 297 |
| 99.242.9996.1 | 8213 S / 12 G OB GR OF | 297 |
| 99.243.3564.7 | 9526826 | 385 |
| 99.243.9996.1 | 8213 S / 13 G OB GR OF | 297 |
| 99.244.9996.1 | 8213 S / 14 G OB GR OF | 297 |
| 99.245.9996.1 | 8213 S / 15 G OB GR OF | 297 |
| 99.246.9996.1 | 8213 S / 16 G OB GR OF | 297 |
| 99.259.3564.7 | 9526833 | 385 |
| 99.261.3521.9 | EUROPAKLEMMLST.1P | 258 |
| 99.262.3521.9 | 6E SONDERA. | 258 |
| 99.262.9996.0 | 8113 S / 2 W OB GR OF | 299 |
| 99.263.3521.9 | 6E SONDERA. | 258 |
| 99.263.9996.0 | 8113 S / 3 W OB GR OF | 299 |
| 99.264.3521.9 | 6E SONDERA. | 258 |
| 99.264.9996.0 | 8113 S / 4 W OB GR OF | 299 |
| 99.265.3521.9 | 6E SONDERA. | 258 |
| 99.265.9996.0 | 8113 S / 5 W OB GR OF | 299 |
| 99.266.3521.9 | 6E SONDERA. | 258 |
| 99.266.9996.0 | 8113 S / 6 W OB GR OF | 299 |
| 99.267.3521.9 | 6E SONDERA. | 258 |
| 99.267.9996.0 | 8113 S / 7 W OB GR OF | 299 |
| 99.268.3521.9 | 6E SONDERA. | 258 |
| 99.268.9996.0 | 8113 S / 8 W OB GR OF | 299 |
| 99.269.3521.9 | | 258 |
| 99.269.9996.0 | 8113 S / 9 W OB GR OF | 299 |
| 99.270.3521.9 | 6E SONDERA. | 258 |
| 99.270.9996.0 | 8113 S / 10 W OB GR OF | 299 |
| 99.271.9996.0 | 8113 S / 11 W OB GR OF | 299 |
| 99.272.3521.9 | W.NR.07060796 6E SONDER | 258 |
| 99.272.9996.0 | 8113 S / 12 W OB GR OF | 299 |
| 99.273.9996.0 | 8113 S / 13 W OB GR OF | 299 |
| 99.274.9996.0 | 8113 S / 14 W OB GR OF | 299 |
| 99.275.9996.0 | 8113 S / 15 W OB GR OF | 299 |
| 99.276.9996.0 | 8113 S / 16 W OB GR OF | 299 |
| 99.483.0000.0 | | 388 |
| 99.700.0000.6 | STVB. KOMPLETT | 672 |
| 99.700.3329.7 | GEHAEUSEUNTERTEIL | 773 |
| 99.700.6905.5 | BUCHSENTEIL | 760 |
| 99.701.0000.6 | STVB. KOMPLETT | 672 |
| 99.701.3329.7 | GEHAEUSEOBERTEIL | 772 |
| 99.701.6905.5 | STECKERTEIL | 760 |
| 99.702.0000.6 | STVB. KOMPLETT | 672 |
| 99.702.3329.7 | GEHAEUSEUNTERTEIL | 773 |
| 99.703.0000.6 | STVB. KOMPLETT | 672 |
| 99.703.3329.7 | GEHAEUSEOBERTEIL | 772 |
| 99.704.3329.7 | GEHAEUSEUNTERTEIL | 773 |
| 99.705.3329.7 | GEHAEUSEOBERTEIL | 772 |
| 99.706.0000.6 | STVB. KOMPLETT | 672 |
| 99.706.3329.7 | GEHAEUSEUNTERTEIL | 773 |
| 99.707.0000.6 | STVB. KOMPLETT | 672 |
| 99.707.3329.7 | GEHAEUSEOBERTEIL | 772 |
| 99.708.0000.6 | STVB. KOMPLETT | 672 |
| 99.709.0000.6 | STVB. KOMPLETT | 672 |
| 99.710.3329.7 | GEHAEUSEOBERTEIL | 773 |
| 99.711.3329.7 | GEHAEUSEOBERTEIL | 773 |
| 99.713.3329.7 | GEHAEUSEOBERTEIL | 773 |
| 99.716.3329.7 | GEHAEUSEOBERTEIL | 773 |
| 99.718.0000.6 | STVB. KOMPLETT | 672 |
| 99.719.0000.6 | STVB. KOMPLETT | 672 |
| 99.720.0000.6 | STVB. KOMPLETT | 672 |
| 99.721.0000.6 | STVB. KOMPLETT | 672 |
| 99.721.3329.7 | F.EIGSICH.ANL.ZINKDRCKG | 772 |
| 99.723.3329.7 | F.EIGSICH.ANL.ZINKDRCKG | 772 |
| 99.724.0000.6 | | 672 |
| 99.725.0000.6 | STVB. KOMPLETT | 672 |
| 99.726.0000.6 | STVB. KOMPLETT | 672 |
| 99.727.0000.6 | STVB. KOMPLETT | 672 |
| 99.727.3329.7 | F.EIGSICH.ANL.ZINKDRCKG | 772 |
| 99.801.3900.9 | 4Ω DC24V 2A | 538 |
| Z1.000.4753.0 | SR - I 5 | 485 |
| Z1.000.9153.0 | SR - A 4 | 485 |
| Z1.108.8453.0 | | 24 |
| Z1.296.3453.0 | WIEBOX CN 19 GKL | 594 |
| Z1.296.3553.0 | WIEBOX CN 19 GK | 594 |
| Z1.296.3853.0 | WIEBOX CN 22 GKL | 594 |
| Z1.296.3953.0 | WIEBOX CN 22 GK | 594 |
| Z1.296.4253.0 | WIEBOX CN 26 GKL | 595 |
| Z1.296.4353.0 | WIEBOX CN 26 GK | 595 |
| Z1.299.3053.0 | | 243 |
| Z1.299.3055.0 | DIST-... /V0 | 38 |
| Z1.299.3155.0 | DIST-1N 4007 -1 /V0 | 38 |
| Z1.299.3255.0 | DIST-D /V0 | 38 |
| Z1.299.3355.0 | DIST-1N 4007 -2 /V0 | 38 |
| Z1.299.4053.0 | | 231 |
| Z1.299.4055.0 | SIST-... /V0 | 38 |
| Z1.299.4155.0 | SIST-LED /V0 | 38 |
| Z1.299.4255.0 | SIST- GL /V0 | 38 |
| Z1.299.6153.0 | PRUEFSTECKER VER. | 176 |
| Z1.299.7153.0 | PRUEFSTECKER | 189 |
| Z1.299.8153.0 | PRUEFSTECKER | 176 |
| Z1.299.9053.0 | FUER WK 4E/U | 176 |
| Z1.299.9253.0 | PST1-WK4 | 177 |
| Z1.299.9453.0 | PST1-WK4 MN | 177 |
| Z1.299.9553.0 | PST10-WK4 | 177 |
| Z1.299.9753.0 | | 177 |
| Z1.980.0040.0 | SCHIENENTRAEGER | 211 |
| Z1.980.0153.0 | N SH/35/F | 213 |
| Z1.990.2030.0 | TRAGBOCK | 215 |
| Z2.123.7000.0 | MAGAZIN M. 25 BU. | 800 |
| Z2.123.7100.0 | MAGAZIN M. 25 BU. | 800 |
| Z2.123.7200.0 | MAGAZIN M. 25 BU. | 800 |
| Z2.123.7300.0 | MAGAZIN M. 25 BU. | 800 |
| Z2.123.7400.0 | MAGAZ.M.25 BUCHS. | 800 |
| Z2.220.0121.0 | FKK18 / 1 Z | 217 |
| Z2.220.0321.0 | FKK18 / 2 Z | 217 |
| Z2.220.0421.0 | FKK18 / 3 Z | 217 |
| Z2.302.0421.0 | / 70 E S35 | 111 |
| Z2.302.0621.0 | 9700 A / 35 E S35 | 111 |
| Z2.302.1321.0 | 9700 / 10 E / 1 | 211 |
| Z2.803.0228.0 | ,0 BIS 11,0 MM | 210 |
| Z2.803.0328.0 | ,5 BIS 13,5 MM | 210 |
| Z2.803.0428.0 | 2,5 BIS 16,5 MM | 210 |
| Z2.803.1328.0 | ,5 BIS 6,5 MM | 212 |
| Z2.803.1428.0 | ,0 BIS 11,0 MM | 212 |
| Z2.803.1528.0 | 0,0 BIS 17,0 MM | 212 |
| Z2.803.1628.0 | 16,0 BIS 24,0 MM | 212 |
| Z2.803.2228.0 | K 15,5 - 20,5 | 210 |
| Z2.803.2328.0 | K 19 - 27 | 210 |
| Z2.803.2428.0 | K 26 - 34 | 210 |
| Z4.102.0480.0 | BZ KL 16 / 4 Z | 256 |
| Z4.102.0680.0 | BZ KL 16 / 6 Z | 256 |
| Z4.102.0880.0 | BZ KL 16 / 8 Z | 256 |
| Z4.102.1280.0 | BZ KL 16 / 12 Z | 256 |
| Z4.102.1680.0 | BZ KL 16 / 16 Z | 256 |
| Z4.102.2080.0 | BZ KL 16 / 20 Z | 256 |
| Z4.210.0652.0 | BEZ.KLAPPSCHILD | 183 |
| Z4.210.1652.0 | BEZ.KLAPPSCHILD | 183 |
| Z4.242.3753.0 | BEZ.SCHILDTRAEGER | 781 |
| Z4.242.4053.0 | BEZ.SCHILDTRAEGER | 781 |
| Z4.242.5053.0 | 9705 A / 5 /10/11MARCOM | 49 |
| Z4.242.5153.0 | 9705 AL/ 5 /10/ 6MARCOM | 49 |
| Z4.242.5153.0 | 9705 AL/ 5 /10/ 6MARCOM | 442 |
| Z4.242.6053.0 | 9705 A / 6 /10/11MARCOM | 49 |
| Z4.242.6153.0 | | 179 |
| Z4.242.6353.0 | | 90 |
| Z4.242.6753.0 | | 49 |
| Z4.242.6853.0 | | 49 |
| Z4.242.8053.0 | | 49 |
| Z4.243.8453.0 | | 47 |
| Z4.802.0480.0 | BZ KL 16 / 4 Z B | 256 |
| Z4.802.2080.0 | BZ KL 16 / 20 Z B | 256 |
| Z5.507.1321.0 | KABELVERSCHRB. | 776 |
| Z5.507.1353.0 | M 20 x 1,5 IP68 | 776 |
| Z5.507.1453.1 | | 758 |
| Z5.507.1521.0 | KABELVERSCHRB. | 776 |
| Z5.507.1553.0 | M 25x1,5 IP68 | 776 |
| Z5.507.1553.1 | | 758 |
| Z5.507.1721.0 | KABELVERSCHRB. | 776 |
| Z5.507.1753.0 | M 32 x 1,5 IP68 | 776 |
| Z5.507.1921.0 | M 40 x 1,5 IP68 | 776 |
| Z5.507.1953.0 | M 40x1,5 IP68 | 776 |
| Z5.507.2121.0 | M 16 x 1,5 | 776 |
| Z5.507.2221.0 | M 20 x 1,5 | 776 |
| Z5.507.2321.0 | M 25 x 1,5 | 776 |
| Z5.507.2421.0 | M 32 x 1,5 | 776 |
| Z5.507.4821.0 | M 20 x 1,5 | 777 |
| Z5.507.5021.0 | M25 x 1,5 | 777 |
| Z5.507.5221.0 | M 32 x 1,5 | 777 |
| Z5.507.5821.0 | M 20 x 1,5 | 777 |
| Z5.507.6021.0 | M 25 x 1,5 | 777 |
| Z5.507.6221.0 | M 32 x 1,5 | 777 |
| Z5.507.6421.0 | M 40 x 1,5 | 777 |
| Z5.507.9521.0 | M 16 x 1,5 | 777 |
| Z5.507.9621.0 | M 20 x 1,5 | 777 |
| Z5.507.9721.0 | M 25 x 1,5 | 777 |
| Z5.507.9821.0 | M 32 x 1,5 | 777 |
| Z5.515.3310.0 | WE SH 1/35 | 212 |
| Z5.515.3410.0 | WE SH 2/35 | 212 |
| Z5.516.2511.0 | 9018 D | 169 |
| Z5.516.2711.0 | 9018 H | 169 |
| Z5.516.2811.0 | 9018 N | 169 |
| Z5.519.0310.0 | SCHIENENHALTER | 213 |
| Z5.519.0410.0 | SCHIENENHALTER | 213 |
| Z5.522.1923.0 | 2163 | 215 |
| Z5.522.5010.0 | 9222 | 40 |
| Z5.522.7053.0 | 9708 | 102 |
| Z5.522.7553.0 | 9208 / S15 | 40 |
| Z5.522.8553.0 | 9708 / 2 S 35 | 19 |
| Z5.522.8553.0 | 9708 / 2 S 35 | 308 |
| Z5.522.8553.0 | 9708 / 2 S 35 | 410 |
| Z5.523.2453.0 | BEF.HALTER | 297 |
| Z5.523.5153.0 | 9708 / 3 S35 | 173 |

# contents


| Part no. | Type | section / page |
|---|---|---|
| Z5.523.5653.0 | WE 2/U | 105 |
| Z5.523.5753.0 | WE 1/U | 101 |
| Z5.523.5753.0 | WE 1/U | 584 |
| Z5.523.7653.0 | BEFEST.HALT.KOMPL | 319 |
| Z5.523.7753.0 | BEF.HALTER | 295 |
| Z5.523.7853.0 | BEF.HALTER | 295 |
| Z5.523.9353.0 | WEF 1/35 | 20 |
| Z5.523.9353.0 | WEF 1/35 | 308 |
| Z5.530.0225.0 | LP.STIFTLEISTE | 318 |
| Z5.530.0325.0 | LP.STIFTLEISTE | 318 |
| Z5.530.0425.0 | LP.STIFTLEISTE | 318 |
| Z5.530.0525.0 | LP.STIFTLEISTE | 318 |
| Z5.530.0625.0 | LP.STIFTLEISTE | 318 |
| Z5.530.0725.0 | LP.STIFTLEISTE | 318 |
| Z5.530.0825.0 | LP.STIFTLEISTE | 318 |
| Z5.530.0925.0 | LP.STIFTLEISTE | 318 |
| Z5.530.1025.0 | LP.STIFTLEISTE | 318 |
| Z5.530.1125.0 | LP.STIFTLEISTE | 318 |
| Z5.530.1225.0 | LP.STIFTLEISTE | 318 |
| Z5.530.1325.0 | LP.STIFTLEISTE | 318 |
| Z5.530.1425.0 | LP.STIFTLEISTE | 318 |
| Z5.530.1525.0 | LP.STIFTLEISTE | 318 |
| Z5.530.1625.0 | LP.STIFTLEISTE | 318 |
| Z5.530.3225.0 | LP.STIFTLEISTE | 318 |
| Z5.530.3325.0 | LP.STIFTLEISTE | 318 |
| Z5.530.3425.0 | LP.STIFTLEISTE | 318 |
| Z5.530.3525.0 | LP.STIFTLEISTE | 318 |
| Z5.530.3625.0 | LP.STIFTLEISTE | 318 |
| Z5.530.3725.0 | LP.STIFTLEISTE | 318 |
| Z5.530.3825.0 | LP.STIFTLEISTE | 318 |
| Z5.530.3925.0 | LP.STIFTLEISTE | 318 |
| Z5.530.4025.0 | LP.STIFTLEISTE | 318 |
| Z5.530.4125.0 | LP.STIFTLEISTE | 318 |
| Z5.530.4225.0 | LP.STIFTLEISTE | 318 |
| Z5.530.4325.0 | LP.STIFTLEISTE | 318 |
| Z5.530.4425.0 | LP.STIFTLEISTE | 318 |
| Z5.530.4525.0 | LP.STIFTLEISTE | 318 |
| Z5.530.4625.0 | LP.STIFTLEISTE | 318 |
| Z5.530.6225.0 | LP.STIFTLEISTE | 318 |
| Z5.530.6325.0 | LP.STIFTLEISTE | 318 |
| Z5.530.6425.0 | LP.STIFTLEISTE | 318 |
| Z5.530.6525.0 | LP.STIFTLEISTE | 318 |
| Z5.530.6625.0 | LP.STIFTLEISTE | 318 |
| Z5.530.6725.0 | LP.STIFTLEISTE | 318 |
| Z5.530.6825.0 | LP.STIFTLEISTE | 318 |
| Z5.530.8225.0 | LP.STIFTLEISTE | 318 |
| Z5.530.8325.0 | LP.STIFTLEISTE | 318 |
| Z5.530.8425.0 | LP.STIFTLEISTE | 318 |
| Z5.530.8525.0 | LP.STIFTLEISTE | 318 |
| Z5.530.8625.0 | LP.STIFTLEISTE | 318 |
| Z5.530.8725.0 | LP.STIFTLEISTE | 318 |
| Z5.530.8825.0 | LP.STIFTLEISTE | 318 |
| Z5.531.0225.0 | LP.STIFTLEISTE | 316 |
| Z5.531.0325.0 | LP.STIFTLEISTE | 316 |
| Z5.531.0425.0 | LP.STIFTLEISTE | 316 |
| Z5.531.0525.0 | LP.STIFTLEISTE | 316 |
| Z5.531.0625.0 | LP.STIFTLEISTE | 316 |
| Z5.531.0725.0 | LP.STIFTLEISTE | 316 |
| Z5.531.0825.0 | LP.STIFTLEISTE | 316 |
| Z5.531.0925.0 | LP.STIFTLEISTE | 316 |
| Z5.531.1025.0 | LP.STIFTLEISTE | 316 |
| Z5.531.1125.0 | LP.STIFTLEISTE | 316 |
| Z5.531.1225.0 | LP.STIFTLEISTE | 316 |
| Z5.531.1325.0 | LP.STIFTLEISTE | 316 |
| Z5.531.1425.0 | LP.STIFTLEISTE | 316 |
| Z5.531.1525.0 | LP.STIFTLEISTE | 316 |
| Z5.531.1625.0 | LP.STIFTLEISTE | 316 |
| Z5.531.3225.0 | LP.STIFTLEISTE | 316 |
| Z5.531.3325.0 | LP.STIFTLEISTE | 316 |
| Z5.531.3425.0 | LP.STIFTLEISTE | 316 |
| Z5.531.3525.0 | LP.STIFTLEISTE | 316 |
| Z5.531.3625.0 | LP.STIFTLEISTE | 316 |
| Z5.531.3725.0 | LP.STIFTLEISTE | 316 |
| Z5.531.3825.0 | LP.STIFTLEISTE | 316 |
| Z5.531.3925.0 | LP.STIFTLEISTE | 316 |
| Z5.531.4025.0 | LP.STIFTLEISTE | 316 |
| Z5.531.4125.0 | LP.STIFTLEISTE | 316 |
| Z5.531.4225.0 | LP.STIFTLEISTE | 316 |
| Z5.531.4325.0 | LP.STIFTLEISTE | 316 |
| Z5.531.4425.0 | LP.STIFTLEISTE | 316 |
| Z5.531.4525.0 | LP.STIFTLEISTE | 316 |
| Z5.531.4625.0 | LP.STIFTLEISTE | 316 |
| Z5.532.0225.0 | LP.STIFTLEISTE | 317 |
| Z5.532.0325.0 | LP.STIFTLEISTE | 317 |
| Z5.532.0425.0 | LP.STIFTLEISTE | 317 |
| Z5.532.0525.0 | LP.STIFTLEISTE | 317 |
| Z5.532.0625.0 | LP.STIFTLEISTE | 317 |
| Z5.532.0725.0 | LP.STIFTLEISTE | 317 |
| Z5.532.0825.0 | LP.STIFTLEISTE | 317 |
| Z5.532.0925.0 | LP.STIFTLEISTE | 317 |
| Z5.532.1025.0 | LP.STIFTLEISTE | 317 |
| Z5.532.1125.0 | LP.STIFTLEISTE | 317 |
| Z5.532.1225.0 | LP.STIFTLEISTE | 317 |
| Z5.532.1325.0 | LP.STIFTLEISTE | 317 |
| Z5.532.1425.0 | LP.STIFTLEISTE | 317 |
| Z5.532.1525.0 | LP.STIFTLEISTE | 317 |
| Z5.532.1625.0 | LP.STIFTLEISTE | 317 |
| Z5.532.3225.0 | LP.STIFTLEISTE | 317 |
| Z5.532.3325.0 | LP.STIFTLEISTE | 317 |
| Z5.532.3425.0 | LP.STIFTLEISTE | 317 |
| Z5.532.3525.0 | LP.STIFTLEISTE | 317 |
| Z5.532.3625.0 | LP.STIFTLEISTE | 317 |
| Z5.532.3725.0 | LP.STIFTLEISTE | 317 |
| Z5.532.3825.0 | LP.STIFTLEISTE | 317 |
| Z5.532.3925.0 | LP.STIFTLEISTE | 317 |
| Z5.532.4025.0 | LP.STIFTLEISTE | 317 |
| Z5.532.4125.0 | LP.STIFTLEISTE | 317 |
| Z5.532.4225.0 | LP.STIFTLEISTE | 317 |
| Z5.532.4325.0 | LP.STIFTLEISTE | 317 |
| Z5.532.4425.0 | LP.STIFTLEISTE | 317 |
| Z5.532.4525.0 | LP.STIFTLEISTE | 317 |
| Z5.532.4625.0 | LP.STIFTLEISTE | 317 |
| Z5.533.7121.0 | PRUEFSTECKER | 357 |
| Z5.533.7221.0 | PRUEFSTECKER | 357 |
| Z5.533.8221.0 | STECKERLEISTE | 357 |
| Z5.535.0225.0 | 8520 S / 2 G 0,8 | 324 |
| Z5.535.0325.0 | 8520 S / 3 G 0,8 | 324 |
| Z5.535.0425.0 | 8520 S / 4 G 0,8 | 324 |
| Z5.535.0525.0 | 8520 S / 5 G 0,8 | 324 |
| Z5.535.0625.0 | 8520 S / 6 G 0,8 | 324 |
| Z5.535.0725.0 | 8520 S / 7 G 0,8 | 324 |
| Z5.535.0825.0 | 8520 S / 8 G 0,8 | 324 |
| Z5.535.0925.0 | | 324 |
| Z5.535.1025.0 | 8520 S / 10 G 0,8 | 324 |
| Z5.535.1125.0 | 8520 S / 11 G 0,8 | 324 |
| Z5.535.1225.0 | 8520 S / 12 G 0,8 | 324 |
| Z5.535.1325.0 | 8520 S / 13 G 0,8 | 324 |
| Z5.535.1425.0 | 8520 S / 14 G 0,8 | 324 |
| Z5.535.1525.0 | 8520 S / 15 G 0,8 | 324 |
| Z5.535.1625.0 | 8520 S / 16 G 0,8 | 324 |
| Z5.535.3225.0 | 8520 S / 2 G 1,0 | 324 |
| Z5.535.3325.0 | 8520 S / 3 G 1,0 | 324 |
| Z5.535.3425.0 | 8520 S / 4 G 1,0 | 324 |
| Z5.535.3525.0 | 8520 S / 5 G 1,0 | 324 |
| Z5.535.3625.0 | 8520 S / 6 G 1,0 | 324 |
| Z5.535.3725.0 | 8520 S / 7 G 1,0 | 324 |
| Z5.535.3825.0 | 8520 S / 8 G 1.0 | 324 |
| Z5.535.3925.0 | | 324 |
| Z5.535.4025.0 | 8520 S / 10 G 1,0 | 324 |
| Z5.535.4125.0 | 8520 S / 11 G 1,0 | 324 |
| Z5.535.4225.0 | 8520 S / 12 G 1,0 | 324 |
| Z5.535.4325.0 | 8520 S / 13 G 1,0 | 324 |
| Z5.535.4425.0 | 8520 S / 14 G 1,0 | 324 |
| Z5.535.4525.0 | 8520 S / 15 G 1,0 | 324 |
| Z5.535.4625.0 | 8520 S / 16 G 1,0 | 324 |
| Z5.540.0225.0 | LP.STIFTLEISTE | 319 |
| Z5.540.0325.0 | LP.STIFTLEISTE | 319 |
| Z5.540.0425.0 | LP.STIFTLEISTE | 319 |
| Z5.540.0525.0 | LP.STIFTLEISTE | 319 |
| Z5.540.0625.0 | LP.STIFTLEISTE | 319 |
| Z5.540.0725.0 | LP:STIFTLEISTE | 319 |
| Z5.540.0825.0 | LP.STIFTLEISTE | 319 |
| Z5.540.0925.0 | LP.STIFTLEISTE | 319 |
| Z5.540.1025.0 | LP.STIFTLEISTE | 319 |
| Z5.540.1125.0 | LP.STIFTLEISTE | 319 |
| Z5.540.1225.0 | LP.STIFTLEISTE | 319 |
| Z5.540.1325.0 | LP.STIFTLEISTE | 319 |
| Z5.540.1425.0 | LP.STIFTLEISTE | 319 |
| Z5.540.1525.0 | LP.STIFTLEISTE | 319 |
| Z5.540.1625.0 | LP.STIFTLEISTE | 319 |
| Z5.540.3225.0 | LP.STIFTLEISTE | 319 |
| Z5.540.3325.0 | LP.STIFTLEISTE | 319 |
| Z5.540.3425.0 | LP.STIFTLEISTE | 319 |
| Z5.540.3525.0 | LP.STIFTLEISTE | 319 |
| Z5.540.3625.0 | LP.STIFTLEISTE | 319 |
| Z5.540.3725.0 | LP.STIFTLEISTE | 319 |
| Z5.540.3825.0 | LP.STIFTLEISTE | 319 |
| Z5.540.3925.0 | LP.STIFTLEISTE | 319 |
| Z5.540.4025.0 | LP.STIFTLEISTE | 319 |
| Z5.540.4125.0 | LP.STIFTLEISTE | 319 |
| Z5.540.4225.0 | LP.STIFTLEISTE | 319 |
| Z5.540.4325.0 | LP.STIFTLEISTE | 319 |
| Z5.540.4425.0 | LP.STIFTLEISTE | 319 |
| Z5.540.4525.0 | LP.STIFTLEISTE | 319 |
| Z5.540.4625.0 | LP.STIFTLEISTE | 319 |
| Z5.540.6225.0 | LP.STIFTLEISTE | 319 |
| Z5.540.6325.0 | LP.STIFTLEISTE | 319 |
| Z5.540.6425.0 | LP.STIFTLEISTE | 319 |
| Z5.540.6525.0 | LP.STIFTLEISTE | 319 |
| Z5.540.6625.0 | LP.STIFTLEISTE | 319 |
| Z5.540.6725.0 | LP.STIFTLEISTE | 319 |
| Z5.540.6825.0 | LP.STIFTLEISTE | 319 |
| Z5.540.8225.0 | LP.STIFTLEISTE | 319 |
| Z5.540.8325.0 | LP.STIFTLEISTE | 319 |
| Z5.540.8425.0 | LP.STIFTLEISTE | 319 |
| Z5.540.8525.0 | LP.STIFTLEISTE | 319 |
| Z5.540.8625.0 | LP.STIFTLEISTE | 319 |
| Z5.540.8725.0 | LP.STIFTLEISTE | 319 |
| Z5.540.8825.0 | LP.STIFTLEISTE | 319 |
| Z5.543.0153.0 | PRUEFSTECKER | 358 |
| Z5.543.0253.0 | PRUEFSTECKER | 358 |
| Z5.543.7000.0 | MAGAZIN M. 25 ST. | 800 |
| Z5.543.7100.0 | MAGAZIN M. 25 ST. | 800 |
| Z5.543.7200.0 | MAGAZIN M. 25 ST. | 800 |
| Z5.543.7300.0 | MAGAZIN M. 25 ST. | 800 |
| Z5.543.7400.0 | MAGAZIN M. 25 ST. | 800 |
| Z5.553.2921.0 | ST 2 / 2.3 ROT | 19 |
| Z5.553.2921.0 | ST 2 / 2.3 ROT | 353 |
| Z5.553.3021.0 | ST 2 / 4 SCHWARZ | 176 |
| Z5.553.9400.0 | KURZSCHLUSSTECKER | 176 |
| Z5.563.0453.0 | DIPOS KODIERAST | 499 |
| Z5.570.0056.0 | BU 70.3 /16 REVZ | 675 |
| Z5.570.0156.0 | BU 70.3 / 6 REVZ | 675 |
| Z5.570.0256.0 | BU 70.3 /10 REVZ | 675 |
| Z5.570.0356.0 | BU 70.3 /24 REVZ | 675 |
| Z5.570.0556.0 | BU 72.3 /16 REVZ | 679 |
| Z5.570.0656.0 | BU 72.3 / 6 REVZ | 679 |
| Z5.570.0756.0 | BU 72.3 /10 REVZ | 679 |
| Z5.570.0856.0 | BU 72.3 /24 REVZ | 679 |
| Z5.570.1056.0 | BU 70.3 /16 REV | 675 |
| Z5.570.1156.0 | BU 70.3 / 6 REV | 675 |
| Z5.570.1256.0 | BU 70.3 /10 REV | 675 |
| Z5.570.1356.0 | BU 70,3 /24 REV | 675 |
| Z5.570.1556.0 | BU 72.3 /16 REV | 679 |
| Z5.570.1656.0 | BU 72.3 / 6 REV | 679 |
| Z5.570.1756.0 | BU 72.3 /10 REV | 679 |
| Z5.570.1856.0 | BU 72.3 /24 REV | 679 |
| Z5.570.2056.0 | BU 70.3 /16 RVZ | 675 |
| Z5.570.2156.0 | BU 70.3 / 6 RVZ | 675 |
| Z5.570.2256.0 | BU 70.3 /10 RVZ | 675 |
| Z5.570.2356.0 | BU 70.3 /24 RVZ | 675 |
| Z5.570.2556.0 | BU 72.3 /16 RVZ | 679 |
| Z5.570.2656.0 | BU 72.3 / 6 RVZ | 679 |
| Z5.570.2756.0 | BU 72.3 /10 RVZ | 679 |
| Z5.570.2856.0 | BU 72.3 /24 RVZ | 679 |
| Z5.570.3056.0 | BU 70.3 /16 RV | 675 |
| Z5.570.3156.0 | BU 70.3 / 6 RV | 675 |
| Z5.570.3256.0 | BU 70.3 /10 RV | 675 |
| Z5.570.3356.0 | BU 70.3 /24 RV | 675 |
| Z5.570.3556.0 | BU 72.3 /16 RV | 679 |
| Z5.570.3656.0 | BU 72.3 / 6 RV | 679 |
| Z5.570.3756.0 | BU 72.3 /10 RV | 679 |
| Z5.570.3856.0 | BU 72.3 /24 RV | 679 |
| Z5.570.4056.0 | BU 70.7 /16 REVZ | 677 |
| Z5.570.4156.0 | BU 70.7 / 6 REVZ | 677 |
| Z5.570.4256.0 | BU 70.7 /10 REVZ | 677 |
| Z5.570.4356.0 | BU 70.7 /24 REVZ | 677 |
| Z5.570.4556.0 | BU 72.7 /16 REVZ | 681 |
| Z5.570.4656.0 | BU 72.7 / 6 REVZ | 681 |
| Z5.570.4756.0 | BU 72.7 /10 REVZ | 681 |
| Z5.570.4856.0 | BU 72.7 /24 REVZ | 681 |
| Z5.570.5056.0 | BU 70.7 /16 REV | 677 |
| Z5.570.5156.0 | BU 70.7 / 6 REV | 677 |
| Z5.570.5256.0 | BU 70.7 /10 REV | 677 |
| Z5.570.5356.0 | BU 70.7 /24 REV | 677 |
| Z5.570.5556.0 | BU 72.7 /16 REV | 681 |
| Z5.570.5656.0 | BU 72.7 / 6 REV | 681 |
| Z5.570.5756.0 | BU 72.7 /10 REV | 681 |
| Z5.570.5856.0 | BU 72.7 /24 REV | 681 |
| Z5.570.6056.0 | BU 73.7 /40 REVZ | 683 |
| Z5.570.6156.0 | BU 73.7 /64 REVZ | 683 |
| Z5.570.6556.0 | BU 70.7 /16 RVZ | 677 |
| Z5.570.6656.0 | BU 70.7 / 6 RVZ | 677 |
| Z5.570.6756.0 | BU 70.7 /10 RVZ | 677 |
| Z5.570.6856.0 | BU 70.7 /24 RVZ | 677 |
| Z5.570.7056.0 | BU 73.7 /40 REV | 683 |
| Z5.570.7156.0 | BU 73.7 /64 REV | 683 |
| Z5.570.7556.0 | BU 72.7 /16 RVZ | 681 |
| Z5.570.7656.0 | BU 72.7 / 6 RVZ | 681 |
| Z5.570.7756.0 | BU 72.7 /10 RVZ | 681 |
| Z5.570.7856.0 | BU 72.7 /24 RVZ | 681 |
| Z5.570.8056.0 | BU 73.7 /40 RVZ | 683 |
| Z5.570.8156.0 | BU 73.7 /64 RVZ | 683 |
| Z5.570.8556.0 | BU 70.7 /16 RV | 677 |
| Z5.570.8656.0 | BU 70.7 / 6 RV | 677 |
| Z5.570.8756.0 | BU 70.7 /10 RV | 677 |
| Z5.570.8856.0 | BU 70.7 /24 RV | 677 |
| Z5.570.9056.0 | BU 73.7 /40 RV | 683 |
| Z5.570.9156.0 | BU 73.7 /64 RV | 683 |
| Z5.570.9556.0 | BU 72.7 /16 RV | 681 |
| Z5.570.9656.0 | BU 72.7 / 6 RV | 681 |
| Z5.570.9756.0 | BU 72.7 /10 RV | 681 |
| Z5.570.9856.0 | BU 72.7 /24 RV | 681 |
| Z5.571.0056.0 | ST 70.3 /16 REVZ | 675 |
| Z5.571.0156.0 | ST 70.3 / 6 REVZ | 675 |
| Z5.571.0256.0 | ST 70.3 /10 REVZ | 675 |
| Z5.571.0356.0 | ST 70.3 /24 REVZ | 675 |
| Z5.571.0556.0 | ST 72.3 /16 REVZ | 679 |
| Z5.571.0656.0 | ST 72.3 / 6 REVZ | 679 |
| Z5.571.0756.0 | ST 72.3 /10 REVZ | 679 |
| Z5.571.0856.0 | ST 72.3 /24 REVZ | 679 |
| Z5.571.1056.0 | ST 70.3 /16 REV | 675 |
| Z5.571.1156.0 | ST 70.3 / 6 REV | 675 |
| Z5.571.1256.0 | ST 70.3 /10 REV | 675 |
| Z5.571.1356.0 | ST 70,3 /24 REV | 675 |

# contents of part number

# contents PART NUMBER


| Part no. | Type | section / page |
|---|---|---|
| Z5.571.1556.0 | ST 72.3 /16 REV | 679 |
| Z5.571.1656.0 | ST 72.3 / 6 REV | 679 |
| Z5.571.1756.0 | ST 72,3 /10 REV | 679 |
| Z5.571.1856.0 | ST 72.3 /24 REV | 679 |
| Z5.571.2056.0 | ST 70.3 /16 RVZ | 675 |
| Z5.571.2156.0 | ST 70.3 / 6 RVZ | 675 |
| Z5.571.2256.0 | ST 70.3 /10 RVZ | 675 |
| Z5.571.2356.0 | ST 70.3 /24 RVZ | 675 |
| Z5.571.2556.0 | ST 72.3 /16 RVZ | 679 |
| Z5.571.2656.0 | ST 72.3 / 6 RVZ | 679 |
| Z5.571.2756.0 | ST 72.3 /10 RVZ | 679 |
| Z5.571.2856.0 | ST 72.3 /24 RVZ | 679 |
| Z5.571.3056.0 | ST 70.3 /16 RV | 675 |
| Z5.571.3156.0 | ST 70.3 / 6 RV | 675 |
| Z5.571.3256.0 | ST 70.3 /10 RV | 675 |
| Z5.571.3356.0 | ST 70.3 /24 RV | 675 |
| Z5.571.3556.0 | ST 72.3 /16 RV | 679 |
| Z5.571.3656.0 | ST 72.3 / 6 RV | 679 |
| Z5.571.3756.0 | ST 72.3 /10 RV | 679 |
| Z5.571.3856.0 | ST 72.3 /24 RV | 679 |
| Z5.571.4056.0 | ST 70.7 /16 REVZ | 677 |
| Z5.571.4156.0 | ST 70.7 / 6 REVZ | 677 |
| Z5.571.4256.0 | ST 70.7 /10 REVZ | 677 |
| Z5.571.4356.0 | ST 70.7 /24 REVZ | 677 |
| Z5.571.4556.0 | ST 72.7 /16 REVZ | 681 |
| Z5.571.4656.0 | ST 72.7 / 6 REVZ | 681 |
| Z5.571.4756.0 | ST 72.7 /10 REVZ | 681 |
| Z5.571.4856.0 | ST 72.7 /24 REVZ | 681 |
| Z5.571.5056.0 | ST 70.7 /16 REV | 677 |
| Z5.571.5156.0 | ST 70.7 / 6 REV | 677 |
| Z5.571.5256.0 | ST 70.7 /10 REV | 677 |
| Z5.571.5356.0 | ST 70.7 /24 REV | 677 |
| Z5.571.5556.0 | ST 72.7 /16 REV | 681 |
| Z5.571.5656.0 | ST 72.7 / 6 REV | 681 |
| Z5.571.5756.0 | ST 72.7 /10 REV | 681 |
| Z5.571.5856.0 | ST 72.7 /24 REV | 681 |
| Z5.571.6056.0 | ST 73.7 /40 REVZ | 683 |
| Z5.571.6156.0 | ST 73.7 /64 REVZ | 683 |
| Z5.571.6556.0 | ST 70.7 /16 RVZ | 677 |
| Z5.571.6656.0 | ST 70.7 / 6 RVZ | 677 |
| Z5.571.6756.0 | ST 70.7 /10 RVZ | 677 |
| Z5.571.6856.0 | ST 70.7 /24 RVZ | 677 |
| Z5.571.7056.0 | ST 73.7 /40 REV | 683 |
| Z5.571.7156.0 | ST 73.7 /64 REV | 683 |
| Z5.571.7556.0 | ST 72.7 /16 RVZ | 681 |
| Z5.571.7656.0 | ST 72.7 / 6 RVZ | 681 |
| Z5.571.7756.0 | ST 72.7 /10 RVZ | 681 |
| Z5.571.7856.0 | ST 72.7 /24 RVZ | 681 |
| Z5.571.8056.0 | ST 73.7 /40 RVZ | 683 |
| Z5.571.8156.0 | ST 73.7 /64 RVZ | 683 |
| Z5.571.8556.0 | ST 70.7 /16 RV | 677 |
| Z5.571.8656.0 | ST 70.7 / 6 RV | 677 |
| Z5.571.8756.0 | ST 70.7 /10 RV | 677 |
| Z5.571.8856.0 | ST 70.7 /24 RV | 677 |
| Z5.571.9056.0 | ST 73.7 /40 RV | 683 |
| Z5.571.9156.0 | ST 73.7 /64 RV | 683 |
| Z5.571.9556.0 | ST 72.7 /16 RV | 681 |
| Z5.571.9656.0 | ST 72.7 / 6 RV | 681 |
| Z5.571.9756.0 | ST 72.7 /10 RV | 681 |
| Z5.571.9856.0 | ST 72.7 /24 RV | 681 |
| Z5.572.0056.0 | BU 70.1 /16 REV WL | 675 |
| Z5.572.0156.0 | BU 70.1 / 6 REV WL | 675 |
| Z5.572.0256.0 | BU 70.1 /10 REV WL | 675 |
| Z5.572.0356.0 | BU 70.1 /24 REV WL | 675 |
| Z5.572.0556.0 | BU 72.1 /16 REV WL | 679 |
| Z5.572.0656.0 | BU 72.1 / 6 REV WL | 679 |
| Z5.572.0756.0 | BU 72.1 /10 REV WL | 679 |
| Z5.572.0856.0 | BU 72.1 /24 REV WL | 679 |
| Z5.572.1056.0 | BU 70.1 /16 REV WR | 675 |
| Z5.572.1156.0 | BU 70.1 / 6 REV WR | 675 |
| Z5.572.1256.0 | BU 70.1 /10 REV WR | 675 |
| Z5.572.1356.0 | BU 70.1 /24 REV WR | 675 |
| Z5.572.1556.0 | BU 72.1 /16 REV WR | 679 |
| Z5.572.1656.0 | BU 72.1 / 6 REV WR | 679 |
| Z5.572.1756.0 | BU 72.1 /10 REV WR | 679 |
| Z5.572.1856.0 | BU 72.1 /24 REV WR | 679 |
| Z5.572.2056.0 | BU 70.1 /16 RV WL | 675 |
| Z5.572.2156.0 | BU 70.1 / 6 RV WL | 675 |
| Z5.572.2256.0 | BU 70.1 /10 RV WL | 675 |
| Z5.572.2356.0 | BU 70.1 /24 RV WL | 675 |
| Z5.572.2556.0 | BU 72.1 /16 RV WL | 679 |
| Z5.572.2656.0 | BU 72.1 / 6 RV WL | 679 |
| Z5.572.2756.0 | BU 72.1 /10 RV WL | 679 |
| Z5.572.2856.0 | BU 72.1 /24 RV WL | 679 |
| Z5.572.3056.0 | BU 70.1 /16 RV WR | 675 |
| Z5.572.3156.0 | BU 70.1 / 6 RV WR | 675 |
| Z5.572.3256.0 | BU 70.1 /10 RV WR | 675 |
| Z5.572.3356.0 | BU 70.1 /24 RV WR | 675 |
| Z5.572.3556.0 | BU 72.1 /16 RV WR | 679 |
| Z5.572.3656.0 | BU 72.1 / 6 RV WR | 679 |
| Z5.572.3756.0 | BU 72.1 /10 RV WR | 679 |
| Z5.572.3856.0 | BU 72.1 /24 RV WR | 679 |
| Z5.572.4056.0 | BU 70.1 /16 REV U WL | 675 |
| Z5.572.4156.0 | BU 70.1 / 6 REV U WL | 675 |
| Z5.572.4256.0 | BU 70.1 /10 REV U WL | 675 |
| Z5.572.4356.0 | BU 70.1 /24 REV U WL | 675 |
| Z5.572.4556.0 | BU 72.1 /16 REV U WL | 679 |
| Z5.572.4656.0 | BU 72.1 / 6 REV U WL | 679 |
| Z5.572.4756.0 | BU 72.1 /10 REV U WL | 679 |
| Z5.572.4856.0 | BU 72.1 /24 REV U WL | 679 |
| Z5.572.5056.0 | BU 70.1 /16 REV U WR | 675 |
| Z5.572.5156.0 | BU 70.1 / 6 REV U WR | 675 |
| Z5.572.5256.0 | BU 70.1 /10 REV U WR | 675 |
| Z5.572.5356.0 | BU 70.1 /24 REV U WR | 675 |
| Z5.572.5556.0 | BU 72.1 /16 REV U WR | 679 |
| Z5.572.5656.0 | BU 72.1 / 6 REV U WR | 679 |
| Z5.572.5756.0 | BU 72.1 /10 REV U WR | 679 |
| Z5.572.5856.0 | BU 72.1 /24 REV U WR | 679 |
| Z5.572.6056.0 | BU 70.1 /16 RV U WL | 675 |
| Z5.572.6156.0 | BU 70.1 / 6 RV U WL | 675 |
| Z5.572.6256.0 | BU 70.1 /10 RV U WL | 675 |
| Z5.572.6356.0 | BU 70.1 /24 RV U WL | 675 |
| Z5.572.6556.0 | BU 72.1 /16 RV U WL | 679 |
| Z5.572.6656.0 | BU 72.1 / 6 RV U WL | 679 |
| Z5.572.6756.0 | BU 72.1 /10 RV U WL | 679 |
| Z5.572.6856.0 | BU 72.1 /24 RV U WL | 679 |
| Z5.572.7056.0 | BU 70.1 /16 RV U WR | 675 |
| Z5.572.7156.0 | BU 70.1 / 6 RV U WR | 675 |
| Z5.572.7256.0 | BU 70.1 /10 RV U WR | 675 |
| Z5.572.7356.0 | BU 70.1 /24 RV U WR | 675 |
| Z5.572.7556.0 | BU 72.1 /16 RV U WR | 679 |
| Z5.572.7656.0 | BU 72.1 / 6 RV U WR | 679 |
| Z5.572.7756.0 | BU 72.1 /10 RV U WR | 679 |
| Z5.572.7856.0 | BU 72.1 /24 RV U WR | 679 |
| Z5.572.8056.0 | BU 73.1 /40 REV WL | 683 |
| Z5.572.8156.0 | BU 73.1 /64 REV WL | 683 |
| Z5.572.8356.0 | BU 73.1 /40 REV WR | 683 |
| Z5.572.8456.0 | BU 73.1 /64 REV WR | 683 |
| Z5.572.8656.0 | BU 73.1 /40 RV WL | 683 |
| Z5.572.8756.0 | BU 73.1 /64 RV WL | 683 |
| Z5.572.8956.0 | BU 73.1 /40 RV WR | 683 |
| Z5.572.9056.0 | BU 73.1 /64 RV WR | 683 |
| Z5.572.9156.0 | BU 73.1 /40 REV U WL | 683 |
| Z5.572.9256.0 | BU 73.1 /64 REV U WL | 683 |
| Z5.572.9356.0 | BU 73.1 /40 REV U WR | 683 |
| Z5.572.9456.0 | BU 73.1 /64 REV U WR | 683 |
| Z5.572.9556.0 | BU 73.1 /40 RV U WL | 683 |
| Z5.572.9656.0 | BU 73.1 /64 RV U WL | 683 |
| Z5.572.9756.0 | BU 73.1 /40 RV U WR | 683 |
| Z5.572.9856.0 | BU 73.1 /64 RV U WR | 683 |
| Z5.573.0056.0 | ST 70.1 /16 REV WL | 675 |
| Z5.573.0156.0 | ST 70.1 / 6 REV WL | 675 |
| Z5.573.0256.0 | ST 70.1 /10 REV WL | 675 |
| Z5.573.0356.0 | ST 70.1 /24 REV WL | 675 |
| Z5.573.0556.0 | ST 72.1 /16 REV WL | 679 |
| Z5.573.0656.0 | ST 72.1 / 6 REV WL | 679 |
| Z5.573.0756.0 | ST 72.1 /10 REV WL | 679 |
| Z5.573.0856.0 | ST 72.1 /24 REV WL | 679 |
| Z5.573.1056.0 | ST 70.1 /16 REV WR | 675 |
| Z5.573.1156.0 | ST 70.1 / 6 REV WR | 675 |
| Z5.573.1256.0 | ST 70.1 /10 REV WR | 675 |
| Z5.573.1356.0 | ST 70.1 /24 REV WR | 675 |
| Z5.573.1556.0 | ST 72.1 /16 REV WR | 679 |
| Z5.573.1656.0 | ST 72.1 / 6 REV WR | 679 |
| Z5.573.1756.0 | ST 72.1 /10 REV WR | 679 |
| Z5.573.1856.0 | ST 72.1 /24 REV WR | 679 |
| Z5.573.2056.0 | ST 70.1 /16 RV WL | 675 |
| Z5.573.2156.0 | ST 70.1 / 6 RV WL | 675 |
| Z5.573.2256.0 | ST 70.1 /10 RV WL | 675 |
| Z5.573.2356.0 | ST 70.1 /24 RV WL | 675 |
| Z5.573.2556.0 | ST 72.1 /16 RV WL | 679 |
| Z5.573.2656.0 | ST 72.1 / 6 RV WL | 679 |
| Z5.573.2756.0 | ST 72.1 /10 RV WL | 679 |
| Z5.573.2856.0 | ST 72.1 /24 RV WL | 679 |
| Z5.573.3056.0 | ST 70.1 /16 RV WR | 675 |
| Z5.573.3156.0 | ST 70.1 / 6 RV WR | 675 |
| Z5.573.3256.0 | ST 70.1 /10 RV WR | 675 |
| Z5.573.3356.0 | ST 70.1 /24 RV WR | 675 |
| Z5.573.3556.0 | ST 72.1 /16 RV WR | 679 |
| Z5.573.3656.0 | ST 72.1 / 6 RV WR | 679 |
| Z5.573.3756.0 | ST 72.1 /10 RV WR | 679 |
| Z5.573.3856.0 | ST 72.1 /24 RV WR | 679 |
| Z5.573.4056.0 | ST 70.1 /16 REV U WL | 675 |
| Z5.573.4156.0 | ST 70.1 / 6 REV U WL | 675 |
| Z5.573.4256.0 | ST 70.1 /10 REV U WL | 675 |
| Z5.573.4356.0 | ST 70.1 /24 REV U WL | 675 |
| Z5.573.4556.0 | ST 72.1 /16 REV U WL | 679 |
| Z5.573.4656.0 | ST 72.1 / 6 REV U WL | 679 |
| Z5.573.4756.0 | ST 72.1 /10 REV U WL | 679 |
| Z5.573.4856.0 | ST 72.1 /24 REV U WL | 679 |
| Z5.573.5056.0 | ST 70.1 /16 REV U WR | 675 |
| Z5.573.5156.0 | ST 70.1 / 6 REV U WR | 675 |
| Z5.573.5256.0 | ST 70.1 /10 REV U WR | 675 |
| Z5.573.5356.0 | ST 70.1 /24 REV U WR | 675 |
| Z5.573.5556.0 | ST 72.1 /16 REV U WR | 679 |
| Z5.573.5656.0 | ST 72.1 / 6 REV U WR | 679 |
| Z5.573.5756.0 | ST 72.1 /10 REV U WR | 679 |
| Z5.573.5856.0 | ST 72.1 /24 REV U WR | 679 |
| Z5.573.6056.0 | ST 70.1 /16 RV U WL | 675 |
| Z5.573.6156.0 | ST 70.1 / 6 RV U WL | 675 |
| Z5.573.6256.0 | ST 70.1 /10 RV U WL | 675 |
| Z5.573.6356.0 | ST 70.1 /24 RV U WL | 675 |
| Z5.573.6556.0 | ST 72.1 /16 RV U WL | 679 |
| Z5.573.6656.0 | ST 72.1 / 6 RV U WL | 679 |
| Z5.573.6756.0 | ST 72.1 /10 RV U WL | 679 |
| Z5.573.6856.0 | ST 72.1 /24 RV U WL | 679 |
| Z5.573.7056.0 | ST 70.1 /16 RV U WR | 675 |
| Z5.573.7156.0 | ST 70.1 / 6 RV U WR | 675 |
| Z5.573.7256.0 | ST 70.1 /10 RV U WR | 675 |
| Z5.573.7356.0 | ST 70.1 /24 RV U WR | 675 |
| Z5.573.7556.0 | ST 72.1 /16 RV U WR | 679 |
| Z5.573.7656.0 | ST 72.1 / 6 RV U WR | 679 |
| Z5.573.7756.0 | ST 72.1 /10 RV U WR | 679 |
| Z5.573.7856.0 | ST 72.1 /24 RV U WR | 679 |
| Z5.573.8056.0 | ST 73.1 /40 REV WL | 683 |
| Z5.573.8156.0 | ST 73.1 /64 REV WL | 683 |
| Z5.573.8356.0 | ST 73.1 /40 REV WR | 683 |
| Z5.573.8456.0 | ST 73.1 /64 REV WR | 683 |
| Z5.573.8656.0 | ST 73.1 /40 RV WL | 683 |
| Z5.573.8756.0 | ST 73.1 /64 RV WL | 683 |
| Z5.573.8956.0 | ST 73.1 /40 RV WR | 683 |
| Z5.573.9056.0 | ST 73.1 /64 RV WR | 683 |
| Z5.573.9156.0 | ST 73.1 /40 REV U WL | 683 |
| Z5.573.9256.0 | ST 73.1 /64 REV U WL | 683 |
| Z5.573.9356.0 | ST 73.1 /40 REV U WR | 683 |
| Z5.573.9456.0 | ST 73.1 /64 REV U WR | 683 |
| Z5.573.9556.0 | ST 73.1 /40 RV U WL | 683 |
| Z5.573.9656.0 | ST 73.1 /64 RV U WL | 683 |
| Z5.573.9756.0 | ST 73.1 /40 RV U WR | 683 |
| Z5.573.9856.0 | ST 73.1 /64 RV U WR | 683 |
| Z5.574.0053.0 | 6/10/16 Gehaeuse-UT | 782 |
| Z5.574.0153.0 | 24 Gehaeuse-UT | 782 |
| Z5.574.0653.0 | HALTERAHMEN 6 | 782 |
| Z5.574.1053.0 | HALTERAHMEN 10 | 782 |
| Z5.574.1253.0 | HALTERAHMEN 2x6 | 782 |
| Z5.574.1653.0 | HALTERAHMEN 16 | 782 |
| Z5.574.2453.0 | HALTERAHMEN 24 | 782 |
| Z5.580.7800.0 | M-IAC 24 | 482 |
| Z5.580.8100.0 | M-IDC 24 | 482 |
| Z5.592.1252.0 | SPERRSTUECK | 788 |
| Z5.593.4053.0 | CODIERSATZ | 788 |
| Z5.595.2153.0 | TR.-STUECK F.TS35 | 584 |
| Z5.599.9025.0 | LP.STIFTLEISTE | 320 |
| Z6.012.0812.0 | SCHRAUBENSATZ | 305 |
| Z7.210.1027.0 | 2072 M | 164 |
| Z7.210.3027.0 | 9215 M-70 | 164 |
| Z7.210.3227.0 | 9215 - 2 | 114 |
| Z7.210.3327.0 | 9215 - 3 | 114 |
| Z7.210.3427.0 | 9215 - 4 | 164 |
| Z7.210.3527.0 | 9215 - 5 | 164 |
| Z7.210.3627.0 | 9215 - 6 | 114 |
| Z7.211.0027.0 | 9703 / 6 M-70 | 72 |
| Z7.211.0227.0 | 9703 / 6- 2 | 72 |
| Z7.211.0327.0 | 9703 / 6- 3 | 86 |
| Z7.211.0427.0 | 9703 / 6- 4 | 86 |
| Z7.211.0527.0 | 9703 / 6- 5 | 86 |
| Z7.211.0627.0 | 9703 / 6- 6 | 72 |
| Z7.212.0027.0 | 9703 / 8 M-50 | 196 |
| Z7.212.0227.0 | 9703 / 8- 2 | 191 |
| Z7.212.0327.0 | 9703 / 8- 3 | 191 |
| Z7.212.0427.0 | 9703 / 8- 4 | 191 |
| Z7.212.0527.0 | 9703 / 8- 5 | 191 |
| Z7.212.0627.0 | 9703 / 8- 6 | 191 |
| Z7.212.1227.0 | | 148 |
| Z7.212.1327.0 | | 148 |
| Z7.212.1427.0 | | 148 |
| Z7.212.1527.0 | | 148 |
| Z7.212.2027.0 | | 148 |
| Z7.212.2227.0 | | 148 |
| Z7.212.2327.0 | | 148 |
| Z7.212.2427.0 | | 148 |
| Z7.213.0027.0 | 9703 / 12 M | 196 |
| Z7.213.0227.0 | 9703 / 12- 2 | 191 |
| Z7.213.0327.0 | 9703 / 12- 3 | 191 |
| Z7.213.0427.0 | 9703 / 12- 4 | 191 |
| Z7.213.0527.0 | 9703 / 12- 5 | 191 |
| Z7.213.0627.0 | 9703 / 12- 6 | 191 |
| Z7.214.0027.0 | 9703 / 10 M | 196 |
| Z7.214.0227.0 | 9703 / 10- 2 | 189 |
| Z7.214.0327.0 | 9703 / 10- 3 | 191 |
| Z7.214.0427.0 | 9703 / 10- 4 | 191 |
| Z7.214.0527.0 | 9703 / 10- 5 | 191 |
| Z7.214.0627.0 | 9703 / 10- 6 | 191 |
| Z7.215.0027.0 | 9703 / 5 M | 190 |
| Z7.215.0227.0 | 9703 / 5- 2 | 189 |
| Z7.215.0327.0 | 9703 / 5- 3 | 190 |
| Z7.215.0427.0 | 9703 / 5- 4 | 190 |
| Z7.215.0527.0 | 9703 / 5- 5 | 190 |
| Z7.215.0627.0 | 9703 / 5- 6 | 190 |
| Z7.215.4027.0 | VB WKM 2,5 / 15 M-60 | 164 |
| Z7.215.4227.0 | VB WKM 2,5 / 15 - 2 | 164 |
| Z7.215.4327.0 | VB WKM 2,5 / 15 - 3 | 164 |
| Z7.215.4427.0 | VB WKM 2,5 / 15 - 4 | 164 |
| Z7.215.4527.0 | VB WKM 2,5 / 15 - 5 | 164 |
| Z7.215.4627.0 | VB WKM 2,5 / 15 - 6 | 164 |

# contents


| Part no. | Type | section / page |
|---|---|---|
| Z7.216.0027.0 | 9703 / 16 M | 196 |
| Z7.216.0227.0 | 9703 / 16- 2 | 189 |
| Z7.216.0327.0 | 9703 / 16- 3 | 192 |
| Z7.216.0427.0 | 9703 / 16- 4 | 192 |
| Z7.216.0527.0 | 9703 / 16- 5 | 192 |
| Z7.216.0627.0 | 9703 / 16- 6 | 192 |
| Z7.220.0227.0 | 2072 / 2 | 141 |
| Z7.220.0327.0 | 2072 / 3 | 164 |
| Z7.220.0427.0 | 2072 / 4 | 164 |
| Z7.220.0527.0 | 2072 / 5 | 164 |
| Z7.220.0627.0 | 2072 / 6 | 141 |
| Z7.255.0227.0 | IVB 0,5 WK4.. - 2 | 86 |
| Z7.255.0327.0 | IVB 0,5 WK4.. - 3 | 86 |
| Z7.255.0427.0 | IVB 0,5 WK4.. - 4 | 86 |
| Z7.255.0527.0 | IVB 0,5 WK4.. - 5 | 86 |
| Z7.255.0627.0 | IVB 0,5 WK4.. - 6 | 86 |
| Z7.255.0727.0 | IVB 0,5 WK4.. - 7 | 86 |
| Z7.255.0827.0 | IVB 0,5 WK4.. - 8 | 86 |
| Z7.255.0927.0 | IVB 0,5 WK4.. - 9 | 86 |
| Z7.255.1027.0 | IVB 0,5 WK4.. - 10 | 86 |
| Z7.255.1127.0 | IVB 0,5 WK4.. - 11 | 86 |
| Z7.255.1227.0 | IVB 0,5 WK4.. - 12 | 86 |
| Z7.255.2227.0 | IVB WK4 E - 2 | 114 |
| Z7.255.2327.0 | IVB WK4 E - 3 | 160 |
| Z7.255.2427.0 | IVB WK4 E - 4 | 160 |
| Z7.255.2527.0 | IVB WK4 E - 5 | 160 |
| Z7.255.2627.0 | IVB WK4 E - 6 | 114 |
| Z7.255.2727.0 | IVB WK4 E - 7 | 160 |
| Z7.255.2827.0 | IVB WK4 E - 8 | 160 |
| Z7.255.2927.0 | IVB WK4 E - 9 | 160 |
| Z7.255.3027.0 | IVB WK4 E - 10 | 160 |
| Z7.255.3127.0 | IVB WK4 E - 11 | 160 |
| Z7.255.3227.0 | IVB WK4 E - 12 | 160 |
| Z7.255.4227.0 | IVB 1 WK4.. - 2 | 86 |
| Z7.255.4327.0 | IVB 1 WK4.. - 3 | 86 |
| Z7.255.4427.0 | IVB 1 WK4.. - 4 | 86 |
| Z7.255.4527.0 | IVB 1 WK4.. - 5 | 86 |
| Z7.255.4627.0 | IVB 1 WK4.. - 6 | 86 |
| Z7.255.4727.0 | IVB 1 WK4.. - 7 | 86 |
| Z7.255.4827.0 | IVB 1 WK4.. - 8 | 86 |
| Z7.255.4927.0 | IVB 1 WK4.. - 9 | 86 |
| Z7.255.5027.0 | IVB 1 WK4.. - 10 | 86 |
| Z7.255.5127.0 | IVB 1 WK4.. - 11 | 86 |
| Z7.255.5227.0 | IVB 1 WK4.. - 12 | 86 |
| Z7.256.0227.0 | FUER 70ER KLEMMENADAPT. | 781 |
| Z7.256.0327.0 | FUER 70ER KLEMMENADAPT. | 781 |
| Z7.256.0427.0 | FUER 70ER KLEMMENADAPT. | 781 |
| Z7.256.0527.0 | FUER 70ER KLEMMENADAPT. | 781 |
| Z7.256.0627.0 | FUER 70ER KLEMMENADAPT. | 781 |
| Z7.256.0727.0 | FUER 70ER KLEMMENADAPT. | 781 |
| Z7.256.0827.0 | FUER 70ER KLEMMENADAPT. | 781 |
| Z7.256.0927.0 | FUER 70ER KLEMMENADAPT. | 781 |
| Z7.256.1027.0 | FUER 70ER KLEMMENADAPT. | 781 |
| Z7.256.1127.0 | FUER 70ER KLEMMENADAPT. | 781 |
| Z7.256.1227.0 | FUER 70ER KLEMMENADAPT. | 781 |
| Z7.256.2227.0 | IVK WK 4/DEU- 2 | 112 |
| Z7.256.2627.0 | IVK WK 4/DEU- 6 | 112 |
| Z7.256.4227.0 | IVBS WK4 E - 2 | 114 |
| Z7.256.4327.0 | IVBS WK4 E - 3 | 160 |
| Z7.256.4427.0 | IVBS WK4 E - 4 | 160 |
| Z7.256.4527.0 | IVBS WK4 E - 5 | 160 |
| Z7.256.4627.0 | IVBS WK4 E - 6 | 114 |
| Z7.256.4727.0 | IVBS WK4 E - 7 | 160 |
| Z7.256.4827.0 | IVBS WK4 E - 8 | 160 |
| Z7.256.4927.0 | IVBS WK4 E - 9 | 160 |
| Z7.256.5027.0 | IVBS WK4 E - 10 | 160 |
| Z7.256.5127.0 | IVBS WK4 E - 11 | 160 |
| Z7.256.5227.0 | IVBS WK4 E - 12 | 160 |
| Z7.258.0225.0 | ISOL.VERB.ST. | 204 |
| Z7.258.0325.0 | ISOL.VERB.ST. | 204 |
| Z7.258.1025.0 | ISOL.VERB.ST. | 204 |
| Z7.258.1225.0 | ISOL.VERB.KAMM | 416 |
| Z7.258.1225.0 | ISOL.VERB.KAMM | 781 |
| Z7.258.1325.0 | ISOL.VERB.KAMM | 781 |
| Z7.258.1425.0 | ISOL.VERB.KAMM | 781 |
| Z7.258.1525.0 | ISOL.VERB.KAMM | 781 |
| Z7.258.1625.0 | ISOL.VERB.KAMM | 781 |
| Z7.258.1725.0 | ISOL.VERB.KAMM | 781 |
| Z7.258.1825.0 | ISOL.VERB.KAMM | 781 |
| Z7.258.1925.0 | ISOL.VERB.KAMM | 781 |
| Z7.258.2025.0 | ISOL.VERB.KAMM | 781 |
| Z7.260.0029.0 | | 40 |
| Z7.260.0229.0 | | 40 |
| Z7.260.0329.0 | | 40 |
| Z7.260.0429.0 | | 40 |
| Z7.260.0529.0 | | 40 |
| Z7.260.0629.0 | | 40 |
| Z7.260.0729.0 | | 40 |
| Z7.260.0829.0 | | 40 |
| Z7.260.0929.0 | | 40 |
| Z7.260.1029.0 | | 40 |
| Z7.261.1127.0 | | 30 |
| Z7.261.1227.0 | IVBWKF 4 - 2 | 20 |
| Z7.261.1327.0 | IVBWKF 4 - 3 | 20 |
| Z7.261.1427.0 | IVBWKF 4 - 4 | 20 |

| Part no. | Type | section / page |
|---|---|---|
| Z7.261.1527.0 | IVBWKF 4 - 5 | 20 |
| Z7.261.1627.0 | IVBWKF 4 - 6 | 20 |
| Z7.261.1727.0 | IVBWKF 4 - 7 | 20 |
| Z7.261.1827.0 | IVBWKF 4 - 8 | 20 |
| Z7.261.1927.0 | IVBWKF 4 - 9 | 20 |
| Z7.261.2027.0 | IVBWKF 4 - 10 | 20 |
| Z7.267.0027.5 | IVB WK 2,5-K-M-70 ROT | 160 |
| Z7.267.0027.6 | IVB WK 2,5-K-M-70 BLAU | 160 |
| Z7.267.0227.5 | IVB WK 2,5-K- 2 ROT | 118 |
| Z7.267.0227.6 | IVB WK 2,5-K- 2 BLAU | 118 |
| Z7.267.0327.5 | IVB WK 2,5-K- 3 ROT | 160 |
| Z7.267.0327.6 | IVB WK 2,5-K- 3 BLAU | 160 |
| Z7.267.0427.5 | IVB WK 2,5-K- 4 ROT | 160 |
| Z7.267.0427.6 | IVB WK 2,5-K- 4 BLAU | 160 |
| Z7.267.0527.5 | IVB WK 2,5-K- 5 ROT | 160 |
| Z7.267.0527.6 | IVB WK 2,5-K- 5 BLAU | 160 |
| Z7.267.0627.5 | IVB WK 2,5-K 6 ROT | 160 |
| Z7.267.0627.6 | IVB WK 2,5-K 6 BLAU | 160 |
| Z7.267.0727.5 | IVB WK 2,5-K 7 ROT | 160 |
| Z7.267.0727.6 | IVB WK 2,5-K 7 BLAU | 160 |
| Z7.267.0827.5 | IVB WK 2,5-K- 8 ROT | 160 |
| Z7.267.0827.6 | IVB WK 2,5-K- 8 BLAU | 160 |
| Z7.267.0927.5 | IVB WK 2,5-K 9 ROT | 160 |
| Z7.267.0927.6 | IVB WK 2,5-K 9 BLAU | 160 |
| Z7.267.1027.5 | IVB WK 2,5-K- 10 ROT | 160 |
| Z7.267.1027.6 | IVB WK 2,5-K- 10 BLAU | 160 |
| Z7.267.1127.5 | IVB WK 2,5-K 11 ROT | 160 |
| Z7.267.1127.6 | IVB WK 2,5-K 6 BLAU | 160 |
| Z7.267.1227.5 | IVB WK 2,5-K- 12 ROT | 118 |
| Z7.267.1227.6 | IVB WK 2,5-K- 12 BLAU | 118 |
| Z7.269.0523.0 | 9012 / 6 | 197 |
| Z7.269.0623.0 | 9012 / 2.5 UB | 161 |
| Z7.269.0723.0 | 9012 | 197 |
| Z7.269.2823.0 | QUERSCHALTLASCHE | 197 |
| Z7.269.2923.0 | QUERSCHALTLASCHE | 161 |
| Z7.269.3023.0 | QUERSCHALTLASCHE | 189 |
| Z7.269.3123.0 | QUERSCHALTLASCHE | 191 |
| Z7.269.3223.0 | QUERSCHALTLASCHE | 191 |
| Z7.269.3423.0 | QUERSCHALTLASCHE | 192 |
| Z7.269.3523.0 | QUERSCHALTLASCHE | 190 |
| Z7.269.3623.0 | QUERSCHALTLASCHE | 161 |
| Z7.269.4023.0 | QUERSCHALTLASCHE | 161 |
| Z7.269.4123.0 | QUERSCHALTLASCHE | 161 |
| Z7.269.4223.0 | QUERSCHALTLASCHE | 161 |
| Z7.270.0027.0 | IVB WK 2,5-3D- M-70 | 162 |
| Z7.270.0227.0 | IVB WK 2,5-3D- 2 | 118 |
| Z7.270.0327.0 | IVB WK 2,5-3D- 3 | 118 |
| Z7.270.0427.0 | IVB WK 2,5-3D- 4 | 162 |
| Z7.270.0527.0 | IVB WK 2,5-3D- 5 | 162 |
| Z7.270.0627.0 | IVB WK 2,5-3D- 6 | 162 |
| Z7.270.0727.0 | IVB WK 2,5-3D- 7 | 162 |
| Z7.270.0827.0 | IVB WK 2,5-3D- 8 | 162 |
| Z7.270.0927.0 | IVB WK 2,5-3D- 9 | 162 |
| Z7.270.1027.0 | IVB WK 2,5-3D- 10 | 162 |
| Z7.270.1127.0 | IVB WK 2,5-3D- 11 | 162 |
| Z7.270.1227.0 | IVB WK 2,5-3D- 12 | 118 |
| Z7.271.0227.0 | IVB WK 4/DEU- 2 | 113 |
| Z7.271.0327.0 | IVB WK 4/DEU- 3 | 113 |
| Z7.271.0427.0 | IVB WK 4/DEU- 4 | 162 |
| Z7.271.0527.0 | IVB WK 4/DEU- 5 | 162 |
| Z7.271.0627.0 | IVB WK 4/DEU- 6 | 162 |
| Z7.271.0727.0 | IVB WK 4/DEU- 7 | 162 |
| Z7.271.0827.0 | IVB WK 4/DEU- 8 | 162 |
| Z7.271.0927.0 | IVB WK 4/DEU- 9 | 162 |
| Z7.271.1027.0 | IVB WK 4/DEU-10 | 162 |
| Z7.271.1127.0 | IVB WK 4/DEU-11 | 162 |
| Z7.271.1227.0 | IVB WK 4/DEU-12 | 113 |
| Z7.271.2227.0 | IVB WK4 E/U- 2 | 145 |
| Z7.271.2327.0 | IVB WK4 E/U- 3 | 145 |
| Z7.271.2427.0 | IVB WK4 E/U- 4 | 162 |
| Z7.271.2527.0 | IVB WK4 E/U- 5 | 162 |
| Z7.271.2627.0 | IVB WK4 E/U- 6 | 162 |
| Z7.271.2727.0 | IVB WK4 E/U- 7 | 162 |
| Z7.271.2827.0 | IVB WK4 E/U- 8 | 162 |
| Z7.271.2927.0 | IVB WK4 E/U- 9 | 162 |
| Z7.271.3027.0 | IVB WK4 E/U-10 | 162 |
| Z7.271.3127.0 | IVB WK4 E/U-11 | 162 |
| Z7.271.3227.0 | IVB WK4 E/U-12 | 145 |
| Z7.271.4227.0 | IVB WKI4 - 2 | 139 |
| Z7.271.4327.0 | IVB WKI4 - 3 | 139 |
| Z7.271.5227.0 | IVB WKI4 -12 | 69 |
| Z7.280.0027.0 | VB WK 2,5 M-80 | 164 |
| Z7.280.0227.0 | VB WK 2,5 - 2 | 120 |
| Z7.280.0327.0 | VB WK 2,5 - 3 | 120 |
| Z7.280.0427.0 | VB WK 2,5 - 4 | 164 |
| Z7.280.0527.0 | VB WK 2,5 - 5 | 164 |
| Z7.280.0627.0 | VB WK 2,5 - 6 | 120 |
| Z7.280.2227.0 | IVBWK 2,5 - 2 | 102 |
| Z7.280.2227.0 | IVBWK 2,5 - 2 | 310 |
| Z7.280.2327.0 | IVBWK 2,5 - 3 | 102 |
| Z7.280.2327.0 | IVBWK 2,5 - 3 | 310 |
| Z7.280.2427.0 | IVBWK 2,5 - 4 | 162 |
| Z7.280.2527.0 | IVBWK 2,5 - 5 | 162 |
| Z7.280.2627.0 | IVBWK 2,5 - 6 | 162 |
| Z7.280.2727.0 | IVBWK 2,5 - 7 | 162 |

| Part no. | Type | section / page |
|---|---|---|
| Z7.280.2827.0 | IVBWK 2,5 - 8 | 162 |
| Z7.280.2927.0 | IVBWK 2,5 - 9 | 162 |
| Z7.280.3027.0 | IVBWK 2,5 -10 | 162 |
| Z7.280.3127.0 | IVBWK 2,5 -11 | 162 |
| Z7.280.3227.0 | IVBWK 2,5 -12 | 102 |
| Z7.280.3227.0 | IVBWK 2,5 -12 | 310 |
| Z7.280.6227.0 | IVBWKF 2,5 - 2 | 19 |
| Z7.280.6227.0 | IVBWKF 2,5 - 2 | 308 |
| Z7.280.6327.0 | IVBWKF 2,5 - 3 | 19 |
| Z7.280.6327.0 | IVBWKF 2,5 - 3 | 308 |
| Z7.280.6427.0 | IVBWKF 2,5 - 4 | 20 |
| Z7.280.6427.0 | IVBWKF 2,5 - 4 | 308 |
| Z7.280.6527.0 | IVBWKF 2,5 - 5 | 20 |
| Z7.280.6527.0 | IVBWKF 2,5 - 5 | 308 |
| Z7.280.6627.0 | IVBWKF 2,5 - 6 | 20 |
| Z7.280.6627.0 | IVBWKF 2,5 - 6 | 308 |
| Z7.280.6727.0 | IVBWKF 2,5 - 7 | 19 |
| Z7.280.6727.0 | IVBWKF 2,5 - 7 | 308 |
| Z7.280.6827.0 | IVBWKF 2,5 - 8 | 20 |
| Z7.280.6827.0 | IVBWKF 2,5 - 8 | 308 |
| Z7.280.6927.0 | IVBWKF 2,5 - 9 | 20 |
| Z7.280.6927.0 | IVBWKF 2,5 - 9 | 308 |
| Z7.280.7027.0 | IVBWKF 2,5 - 10 | 20 |
| Z7.280.7027.0 | IVBWKF 2,5 - 10 | 308 |
| Z7.281.0027.0 | VB WK 4 M-70 | 87 |
| Z7.281.0227.0 | VB WK 4 - 2 | 87 |
| Z7.281.0327.0 | VB WK 4 - 3 | 87 |
| Z7.281.0427.0 | VB WK 4 - 4 | 87 |
| Z7.281.0527.0 | VB WK 4 - 5 | 87 |
| Z7.281.0627.0 | VB WK 4 - 6 | 87 |
| Z7.281.1227.0 | IVBWK 4 - 2 | 78 |
| Z7.281.1327.0 | IVBWK 4 - 3 | 78 |
| Z7.281.1427.0 | IVBWK 4 - 4 | 78 |
| Z7.281.1527.0 | IVBWK 4 - 5 | 78 |
| Z7.281.1627.0 | IVBWK 4 - 6 | 78 |
| Z7.281.1727.0 | IVBWK 4 - 7 | 87 |
| Z7.281.1827.0 | IVBWK 4 - 8 | 87 |
| Z7.281.1927.0 | IVBWK 4 - 9 | 87 |
| Z7.281.2027.0 | IVBWK 4 -10 | 87 |
| Z7.281.2127.0 | IVBWK 4 -11 | 87 |
| Z7.281.2227.0 | IVBWK 4 -12 | 87 |
| Z7.281.3027.0 | VB WK/..S/IW/U-20 | 164 |
| Z7.281.3227.0 | VB WK/..S/IW/U- 2 | 140 |
| Z7.281.3327.0 | VB WK/..S/IW/U- 3 | 140 |
| Z7.281.3427.0 | VB WK/..S/IW/U- 4 | 164 |
| Z7.281.3527.0 | VB WK/..S/IW/U- 5 | 164 |
| Z7.281.3627.0 | VB WK/..S/IW/U- 6 | 140 |
| Z7.281.6027.0 | VB WK 4/D..M-70 | 164 |
| Z7.281.6227.0 | VB WK 4/D..-2 | 164 |
| Z7.281.6327.0 | VB WK 4/D..-3 | 164 |
| Z7.281.6427.0 | VB WK 4/D..-4 | 164 |
| Z7.281.6527.0 | VB WK 4/D..-5 | 164 |
| Z7.281.6627.0 | VB WK 4/D..-6 | 164 |
| Z7.281.7227.0 | IVB WK 4/D..- 2 | 112 |
| Z7.281.7327.0 | IVB WK 4/D..- 3 | 112 |
| Z7.281.7427.0 | IVB WK 4/D..- 4 | 162 |
| Z7.281.7527.0 | IVB WK 4/D..- 5 | 162 |
| Z7.281.7627.0 | IVB WK 4/D..- 6 | 162 |
| Z7.281.7727.0 | IVB WK 4/D..- 7 | 162 |
| Z7.281.7827.0 | IVB WK 4/D..- 8 | 162 |
| Z7.281.7927.0 | IVB WK 4/D..- 9 | 162 |
| Z7.281.8027.0 | IVB WK 4/D..-10 | 162 |
| Z7.281.8127.0 | IVB WK 4/D..-11 | 162 |
| Z7.281.8227.0 | IVB WK 4/D..-12 | 112 |
| Z7.282.0027.0 | VB WK 6 M-40 | 165 |
| Z7.282.0227.0 | VB WK 6 - 2 | 165 |
| Z7.282.0327.0 | VB WK 6 - 3 | 165 |
| Z7.282.0427.0 | VB WK 6 - 4 | 165 |
| Z7.282.0527.0 | VB WK 6 - 5 | 165 |
| Z7.282.0627.0 | VB WK 6 - 6 | 165 |
| Z7.282.2227.0 | IVBWK 6 - 2 | 103 |
| Z7.282.2327.0 | IVBWK 6 - 3 | 101 |
| Z7.282.2427.0 | IVBWK 6 - 4 | 163 |
| Z7.282.2527.0 | IVBWK 6 - 5 | 163 |
| Z7.282.2627.0 | IVBWK 6 - 6 | 163 |
| Z7.282.2727.0 | IVBWK 6 - 7 | 163 |
| Z7.282.2827.0 | IVBWK 6 - 8 | 163 |
| Z7.282.2927.0 | IVBWK 6 - 9 | 163 |
| Z7.282.3027.0 | IVBWK 6 -10 | 163 |
| Z7.282.3127.0 | IVBWK 6 -11 | 163 |
| Z7.282.3227.0 | IVBWK 6 -12 | 103 |
| Z7.282.4227.0 | IVBWKF 6- 2 | 21 |
| Z7.283.2227.0 | IVBWKN10 - 2 | 78 |
| Z7.283.2327.0 | IVBWKN10 - 3 | 78 |
| Z7.283.2427.0 | IVBWK 10 - 4 | 78 |
| Z7.283.2527.0 | IVBWKN10 - 5 | 78 |
| Z7.283.2627.0 | IVBWKN10 - 6 | 78 |
| Z7.283.2727.0 | IVBWKN10 - 7 | 163 |
| Z7.283.2827.0 | IVBWKN10 - 8 | 163 |
| Z7.283.2927.0 | IVBWKN10 - 9 | 163 |
| Z7.283.3027.0 | IVBWKN10 -10 | 163 |
| Z7.283.3127.0 | IVBWKN10 -11 | 163 |
| Z7.283.3227.0 | IVBWKN10 -12 | 103 |
| Z7.283.6027.0 | VBWKN 10 - M-40 | 165 |
| Z7.283.6227.0 | VBWKN 10 - 2 | 165 |

contents of
part number

# contents PART NUMBER


| Part no. | Type | section / page |
|---|---|---|
| Z7.283.6327.0 | VBWKN 10 - 3 | 165 |
| Z7.283.6427.0 | VBWKN 10 - 4 | 165 |
| Z7.283.6527.0 | VBWKN 10 - 5 | 165 |
| Z7.283.6627.0 | VBWKN 10 - 6 | 165 |
| Z7.283.8227.0 | IVBWKF 10- 2 | 21 |
| Z7.284.2027.0 | IVBWKN16 - M-30 | 163 |
| Z7.284.2227.0 | IVBWKN16 - 2 | 104 |
| Z7.284.2327.0 | IVBWKN16 - 3 | 104 |
| Z7.284.2427.0 | IVBWKN16 - 4 | 163 |
| Z7.284.2527.0 | IVBWKN16 - 5 | 163 |
| Z7.284.2627.0 | IVBWKN16 - 6 | 163 |
| Z7.284.2727.0 | IVBWKN16 - 7 | 163 |
| Z7.284.2827.0 | IVBWKN16 - 8 | 163 |
| Z7.284.2927.0 | IVBWKN16 - 9 | 163 |
| Z7.284.3027.0 | IVBWKN16 -10 | 163 |
| Z7.284.3127.0 | IVBWKN16 -11 | 163 |
| Z7.284.3227.0 | IVBWKN16 -12 | 104 |
| Z7.284.4227.0 | IVBWKF 16- 2 | 21 |
| Z7.284.6227.0 | IVB WKIF 16-2 | 25 |
| Z7.284.9227.0 | | 79 |
| Z7.284.9327.0 | | 79 |
| Z7.284.9427.0 | | 79 |
| Z7.284.9527.0 | | 79 |
| Z7.284.9627.0 | | 79 |
| Z7.285.2027.0 | IVBWKN35 - M-20 | 163 |
| Z7.285.2227.0 | IVBWKN35 - 2 | 105 |
| Z7.285.2327.0 | IVBWKN35 - 3 | 105 |
| Z7.285.2427.0 | IVBWKN35 - 4 | 163 |
| Z7.285.2527.0 | IVBWKN35 - 5 | 163 |
| Z7.285.2627.0 | IVBWKN35 - 6 | 163 |
| Z7.285.2727.0 | IVBWKN35 - 7 | 163 |
| Z7.285.2827.0 | IVBWKN35 - 8 | 163 |
| Z7.285.2927.0 | IVBWKN35 - 9 | 163 |
| Z7.285.3027.0 | IVBWKN35 -10 | 163 |
| Z7.285.3127.0 | IVBWKN35 -11 | 163 |
| Z7.285.3227.0 | IVBWKN35 -12 | 105 |
| Z7.285.4227.0 | IVBWKI35 - 2 | 79 |
| Z7.285.4327.0 | IVBWKI35 - 3 | 79 |
| Z7.285.4427.0 | IVBWKI35 - 4 | 79 |
| Z7.285.4527.0 | IVBWKI35 - 5 | 79 |
| Z7.285.4627.0 | IVBWKI35 - 6 | 79 |
| Z7.286.3227.0 | VB WKN70 - 2 | 165 |
| Z7.286.3327.0 | VB WKN70 - 3 | 165 |
| Z7.286.3427.0 | VB WKN70 - 4 | 165 |
| Z7.286.3527.0 | VB WKN70 - 5 | 165 |
| Z7.286.3627.0 | VB WKN70 - 6 | 165 |
| Z7.287.0027.0 | VB WK 10 / SI M-30 | 165 |
| Z7.287.0227.0 | VB WK 10 / SI - 2 | 125 |
| Z7.287.0327.0 | VB WK 10 / SI - 3 | 125 |
| Z7.287.0427.0 | VB WK 10 / SI - 4 | 165 |
| Z7.287.0527.0 | VB WK 10 / SI - 5 | 165 |
| Z7.287.0627.0 | VB WK 10 / SI - 6 | 125 |
| Z7.287.1227.0 | VBWKN150 - 2 | 165 |
| Z7.287.1327.0 | VBWKN150 - 3 | 165 |
| Z7.288.0027.0 | VB WKI 10 M-40 | 87 |
| Z7.288.0227.0 | VB WKI 10 - 2 | 87 |
| Z7.288.0327.0 | VB WKI 10 - 3 | 87 |
| Z7.288.0427.0 | VB WKI 10 - 4 | 87 |
| Z7.288.0527.0 | VB WKI 10 - 5 | 87 |
| Z7.288.0627.0 | VB WKI 10 - 6 | 87 |
| Z7.289.0027.0 | VB WKI 16 M-20 | 87 |
| Z7.289.0227.0 | VB WKI 16 - 2 | 87 |
| Z7.289.0327.0 | VB WKI 16 - 3 | 69 |
| Z7.289.0427.0 | VB WKI 16 - 4 | 87 |
| Z7.289.0527.0 | VB WKI 16 - 5 | 87 |
| Z7.289.0627.0 | VB WKI 16 - 6 | 87 |
| Z7.311.1753.0 | | 167 |
| Z7.311.2753.0 | KL.LST.BEZ. TS15 | 167 |
| Z7.409.5753.0 | ABDECKUNG | 156 |
| Z7.409.5853.0 | ABDECKUNG | 158 |
| Z7.409.7056.0 | SCHUTZDECKEL | 780 |
| Z7.409.7156.0 | SCHUTZDECKEL | 780 |
| Z7.409.7256.0 | SCHUTZDECKEL | 780 |
| Z7.409.7356.0 | SCHUTZDECKEL | 780 |
| Z7.409.8856.0 | SCHUTZDECKEL | 780 |
| Z7.409.8956.0 | SCHUTZDECKEL | 780 |
| Z7.415.0010.0 | 1X 9P BUCHSE LOET | 756 |
| Z7.415.0110.0 | 2X 9P BUCHSE LOET | 756 |
| Z7.415.0235.0 | 1X 9P STECKER LOET | 756 |
| Z7.415.0335.0 | 2X 9P STECKER LOET | 756 |
| Z7.415.0810.0 | 1X15P BUCHSE LOET | 756 |
| Z7.415.0910.0 | 2X15P BUCHSE LOET | 756 |
| Z7.415.1035.0 | 1X15P STECKER LOET | 756 |
| Z7.415.1135.0 | 2X15P STECKER LOET | 756 |
| Z7.415.1610.0 | 1X25P BUCHSE LOET | 756 |
| Z7.415.1710.0 | 2X25P BUCHSE LOET | 756 |
| Z7.415.1810.0 | 1X25+1X15P BUCHSE LOET | 756 |
| Z7.415.1935.0 | 1X25P STECKER LOET | 756 |
| Z7.415.2035.0 | 2X25P STECKER LOET | 756 |
| Z7.415.2135.0 | 1X25+1X15P STECKER LOET | 756 |
| Z7.415.2410.0 | 1X37P BUCHSE LOET | 756 |
| Z7.415.2510.0 | 2X37P BUCHSE LOET | 756 |
| Z7.415.2635.0 | 1X37P STECKER LOET | 756 |
| Z7.415.2735.0 | 2X37P STECKER LOET | 756 |
| Z7.415.3210.0 | 1X50P BUCHSE LOET | 756 |
| Z7.415.3335.0 | 1X50P STECKER LOET | 756 |
| Z7.415.3410.0 | 2X50P BUCHSE LOET | 756 |
| Z7.415.3535.0 | 2X50P STECKER LOET | 756 |
| Z7.416.1656.0 | DECKEL | 780 |
| Z7.416.1756.0 | DECKEL | 780 |
| Z7.416.1856.0 | DECKEL | 780 |
| Z7.419.6128.0 | DECKEL M.VERRIEG. | 780 |
| Z7.419.6228.0 | DECKEL | 780 |
| Z8.000.0035.5 | 24 VDC 2W | 455 |
| Z8.000.0056.9 | 24 VDC 1W | 454 |
| Z8.000.0103.4 | KB 1 RM 5.08 | 460 |
| Z8.000.0123.1 | B EXP.BOARD WEG 6 POL | 592 |
| Z8.000.0156.9 | OAC 3-32V/24-280V | 482 |
| Z8.000.0169.8 | ODC 3-32V/3-60V | 482 |
| Z8.000.0169.9 | ODC 3-32V/3-200V | 482 |
| Z8.000.0176.2 | 110 VDC 2W | 458 |
| Z8.000.0181.0 | 110 VDC 1W | 456 |
| Z8.000.0200.8 | VBRM3.3 | 442 |
| Z8.000.0202.1 | EKAP ROT | 442 |
| Z8.000.0202.2 | EKAP BLAU | 442 |
| Z8.000.0202.3 | VBK6.2 ROT | 442 |
| Z8.000.0202.4 | VBK6.2 BLAU | 442 |
| Z8.000.0229.5 | DIPOS JB 4,3 | 499 |

# contents


| Part no. | Type | section / page | Part no. | Type | section / page | Part no. | Type | section / page |
|---|---|---|---|---|---|---|---|---|

# notice

# notice

# notice

# notice

wieland

Electrical
Connections

**USA**
Wieland Electric Inc.
49 International Road
Burgaw, NC 28425
Phone: (910) 259-5050
Fax: (910) 259-3691
e-mail: sales@wielandinc.com

**Canada**
Wieland Electric Inc.
2889 Brighton Road
Oakville, Ontario L6H 6C9
Phone: (905) 829-8414
Fax: (905) 829-8413
e-mail: oakville@wielandinc.com

**On the Internet:**
www.wielandinc.com

**Toll Free 1-800-wieland**

## Product Range

DIN rail terminal blocks
- with screw connection
- with spring connection
- with IDC connection

Terminal blocks for electrical installations
- with screw connection
- with spring connection

Lighting and appliance terminals
Terminal strips

PC board connectors
- modular/pluggable
- insulated headers
- rising cage clamp/ plug connectors
- TOP connection
- Spring connection
- electronics housings

Electronics components
- relay modules
- solid-state modules
- interface modules
- function modules
- Power Supplies

Fieldbus components
- motor starter
- power bus
- distributed I/Os

Systems for electrical installation
- Mains connectors
- Bus connectors
- Compact connectors
- Low voltage connectors
- Flat cable systems
- Distribution systems
- EIB switching devices

Multipole connectors
Multipole adapter
EExi
Data cablefeed-through
Connectors with mixed contacts