NOTES:

1. MATERIALS OF CONSTRUCTION:

BODY	= BRASS, NICKEL PLATED (.000200 MIN THICK)
CONTACT PIN	= PHOSPHOR BRONZE, BRIGHT TIN PLATE (.000250 MIN THICK)
BRACKET	= PHOSPHOR BRONZE OR C.R.S., BRIGHT TIN PLATE (.000180 MIN THICK)
INSULATORS (2)	= POLYPROPYLENE HOMOPOLYMER (BASELL INC., PRO-FAX 6331 or EQUIVALENT), COLOR: BLUE (PANTONE 801C, Delta E=±3%)

2. ELECTRICAL:

A.	IMPEDANCE MATCH: (WHEN TESTED ON ETC TEST BOARD #107303)	REAL(R) = 75 ±10 OHMS IMAGINARY(X) = ±45 OHMS
B.	FREQUENCY RANGE:	900 TO 2150 MHz
C.	RETURN LOSS (VSWR):	-10 dB (1.925) MAX.
D.	D.W.V.:	1200 VRMS FOR 60 SECONDS, MIN.
E.	INSULATION RESISTANCE:	500 MEG OHMS
F.	CONTACT RESISTANCE:	20 mOHMS MAXIMUM

3. PHYSICAL & MECHANICAL:

A.	DURABILITY:	100 CYCLES MINIMUM
B.	PIN RANGE:	Ø .022 TO .042 TO A DEPTH OF .380" MINIMUM PER IPS-SP-400
C.	INSERTION FORCE:	100 gm - 500 gm
D.	WITHDRAWAL FORCE:	30 gm - 130 gm
E.	MATING TORQUE:	15 IN-LBS. MAXIMUM
F.	BODY TO BRACKET RETENTION:	AXIAL = 60 LBS MINIMUM RADIAL = 15 IN-LBS MINIMUM
G.	CONTINUOUS OPERATING TEMPERATURE:	-40° TO +60°C.
H.	SHORT DURATION TEMPERATURE:	+170°C FOR 30 SECONDS +200°C FOR 5 SECONDS
I.	FLAMMABILITY RATING:	UL94-HB

531-40144	REVISIONS				
DRAWING NO.	REV	DESCRIPTION	DATE	ECO	APPR
THIRD ANGLE PROJ.	A	RELEASE TO MFG.	6/11/03	44481	BCG
	B	A) ADDED: "TO A DEPTH OF .380" MINIMUM" TO NOTE 3B	11/9/04	45234	BCG

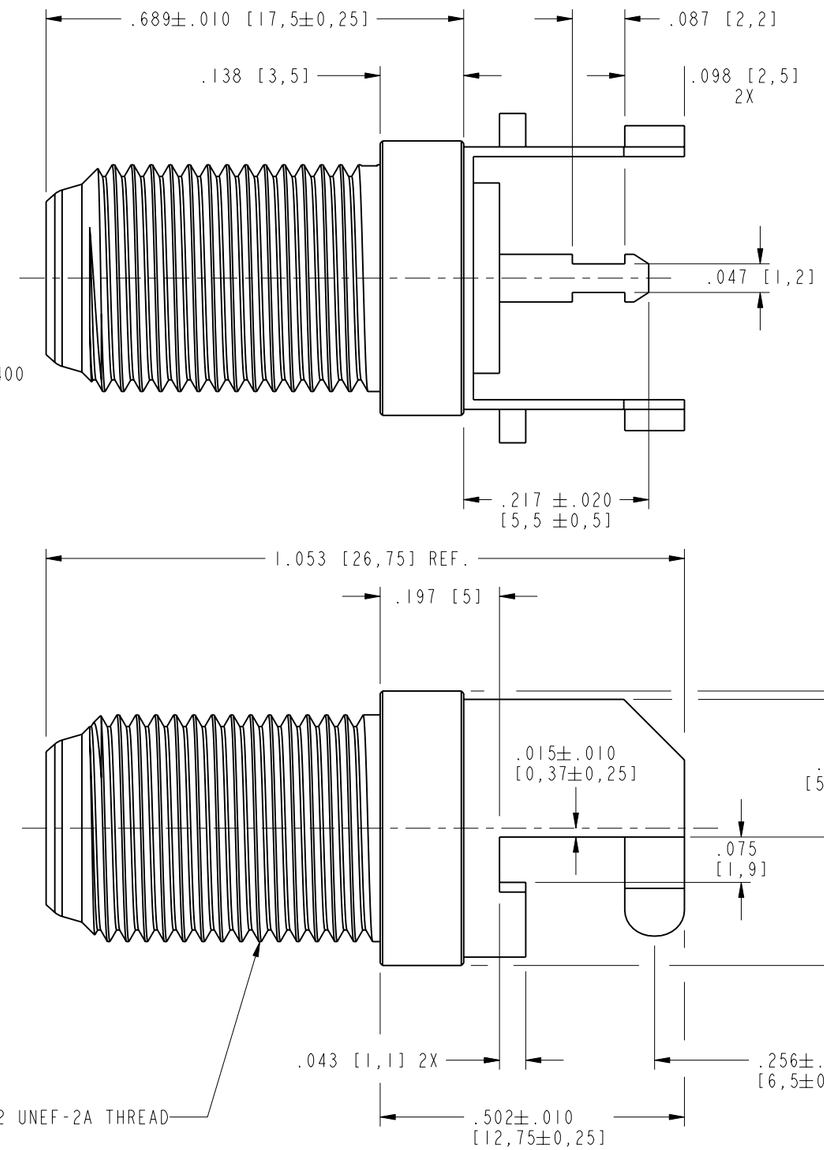

PCB MOUNTING PATTERN

SCALE 1.500

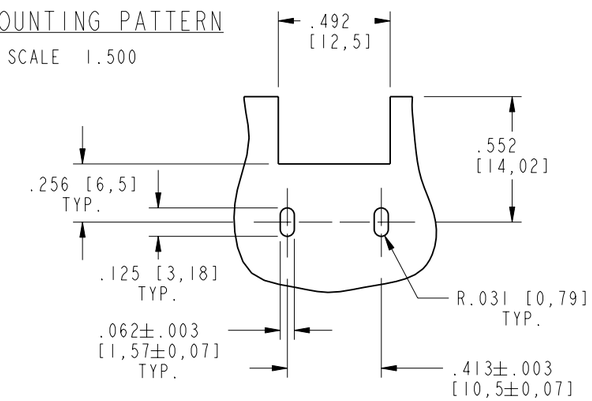

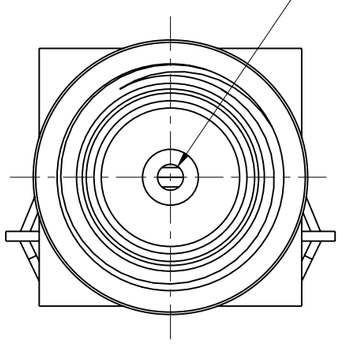

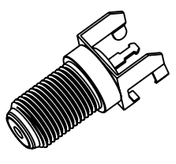

SCALE 1.000

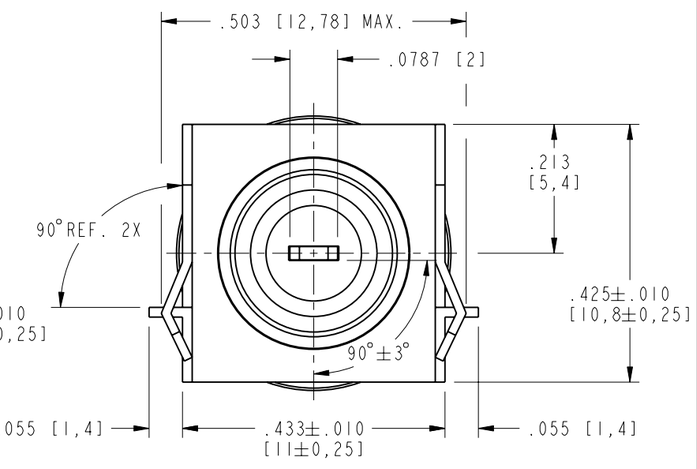

CUSTOMER OUTLINE DRAWING

ALL OTHER SHEETS ARE FOR INTERNAL USE ONLY

UNLESS OTHERWISE SPECIFIED, DIMENSIONS ARE IN INCHES AND TOLERANCES ARE:
2 PLACE DECIMAL ±.015 (0,381 mm) — 3 PLACE DECIMAL ±.005 (0,127 mm) — ANGLES ± 1°

NOTICE - These drawings, specifications, or other data (1) are, and remain the property of Amphenol Corp. (2) must be returned upon request; and (3) are confidential and not to be disclosed to any person other than those to whom they are given by Amphenol Corp. The furnishing of these drawings, specifications, or other data by Amphenol Corp., or to any other person to anyone for any purpose is not to be regarded by implication or otherwise in any manner licensing, granting rights or permitting such holder or any other person to manufacture, use or sell any product, process or design, patented or otherwise, that may in any way be related to or disclosed by said drawings, specifications, or other data.

MATERIAL

REFERENCE
119479
SIMILAR TO: 531-40101
EAR# 809
GEN# KJ-F625100-005-N_TPPT

DRAWN	B.C. GLEISSNER	DATE 05-Mar-03
ENGINEER	B.C. GLEISSNER	DATE 05-Mar-03
APPROVED	O. BARTHELMES	DATE 6/11/03
CAD FILE	I:\CATV\F&G\531-40144	

TITLE
F RECEPTACLE,
PCB, EDGE MOUNT
(BLUE INSULATOR)

Amphenol RF
Danbury, CT, USA
Tainan, Taiwan
Shenzhen, China
www.amphenolrf.com

SCALE: 4.0:1 | SHEET 2 OF 2

CODE ID	DWG SIZE	DRAWING NO.	REV
74868	B	531-40144	B

Mouser Electronics

Authorized Distributor

Click to View Pricing, Inventory, Delivery & Lifecycle Information:

Amphenol:
531-40144