REVISIONS			
REV	DESCRIPTION	DATE	APPROVED
A1	REVISED PER ECO-11-005294	14APR11	HMR

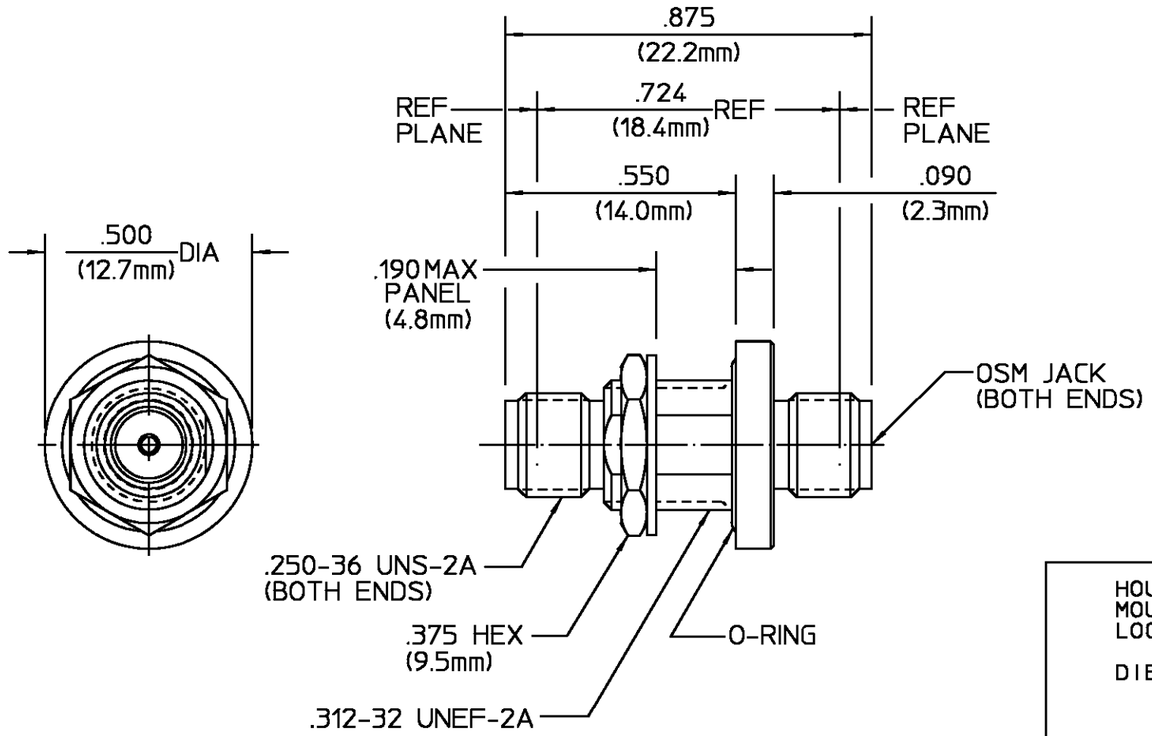

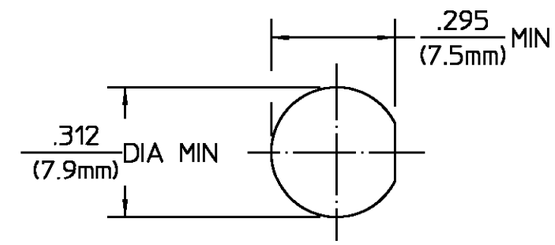

RECOMMENDED MOUNTING HOLE

ELECTRICAL	
Nominal Impedance (Ohms)	50
Frequency Range (GHz)	DC to 18.0
Volt Rating (VRMS MAX) @ Sea Level	335
VSWR	1.10 + .010 f(GHz)
Insertion Loss (dB MAX)	$.15\sqrt{f(GHz)}$
RF Leakage (dB MIN)	-90
Corona, 70,000 Ft (VRMS MIN)	250
Dielectric Withstanding Voltage (VRMS MIN) @ Sea Level	1000
Contact Resistance (Milliohms MAX)	
Center Contact	12.0
Outer Contact	4.0
RF High Potential @ Sea Level (VRMS MIN @ 5 MHz)	670
I.R.(Megohms MIN)	5000

MECHANICAL	
Interface Dimensions MIL-STD-348A, Fig. 310.2	
Recommended Mating Torque	7 to 10 In-Lbs
Mating Characteristics:	
Insertion (MAX Lbs)	3.0
Withdrawal (MIN Oz)	1.0
Force to Engage and Disengage (In-Lbs MAX)	2.0
Center Contact Captivation	
Axial (Lbs)	6.0
Radial (In-Oz)	N/A
Seal:	
Hermetic:	1×10^{-7} cc/sec
Weatherproof:	30 psi MAX
Mounting Seal	
Weight (Grams)	

ENVIRONMENTAL
Temperature Rating -65°C to +165°C
Vibration MIL-STD-202, Method 204, Condition D
Shock MIL-STD-202, Method 213, Condition I
Thermal Shock MIL-STD-202, Method 107, Condition C
Moisture Resistance MIL-STD-202, Method 106
Corrosion - MIL-STD-202, Method 101, Condition B, 5% salt spray

COMPONENT	MATERIAL	FINISH
HOUSING	STAINLESS STEEL PER ASTM-A484 AND ASTM-A582, TYPE 303	GOLD PLATE PER MIL-G-45204 OVER NICKEL PLATE PER QQ-N-290
MOUNTING NUT		
LOCKWASHER		
DIELECTRIC	TFE FLUOROCARBON PER MIL-P-19468 AND FED SPEC L-P-403	N/A
CENTER CONTACT	BERYLLIUM COPPER PER QQ-C-530, ALLOY 173	GOLD PLATE PER MIL-G-45204 OVER COPPER PLATE PER MIL-C-14550
CONTACT EXT.	IRON-NICKEL ALLOY PER MIL-I-23011 CLASS 2	GOLD PLATE PER MIL-G-45204 OVER NICKEL PLATE PER QQ-N-290
O-RING	EPM PER ASTM-D2000-70	N/A
HERMETIC SEAL	GLASS BEAD	N/A

UNLESS OTHERWISE SPECIFIED DIMENSIONS ARE IN INCHES
TOLERANCE ON
FRAC. ± 1/64 DEC. ±.005 ANGLES ± 1°

DRAWN BY	B.W.C.	DATE 6-9-67
CHECKED BY	C.S.D.	1-14-68
APP'D BY	D.NANIA	1-15-68

USE ASS'Y PROCEDURE

NO. A.P. N/A

CUSTOMER DRAWING

TE Connectivity

TITLE OSM BULKHEAD FEEDTHRU JACK TO JACK ADAPTER-HERMETIC SEAL

SIZE	CODE IDENT NO.		REV
B	26805	1054874-1	A1

SCALE 3:1 SHEET 1 OF 1