Honeywell

LIMIT SWITCH

CATALOGUE LISTING
GLS

CHART NO.
MTG-GL-197

SNAP-ACTION CONTACTS	SLOW-ACTION CONTACTS (BREAK BEFORE MAKE)	SLOW-ACTION CONTACTS (MAKE BEFORE BREAK)	SLOW-ACTION CONTACTS (2 NORMALLY CLOSED)	CONTACT BLOCK DIAGRAM TERMINAL DESIGNATION TO EN 50013
13–14, Zb, 21–22	21–22, Zb, 13–14	21–22, Zb, 13–14	11–12, 2Y, 21–22	
FP = 0° OP = 26° RP = 14.5° DT = 115° ✳ = 54° OT = 61° to 75°	FP = 0° OP = 26° ✳ = 36.5° OP2= 39° OT = 61° to 75°	FP = 0° OP = 26° ✳ = 50.5° OP2= 39° OT = 61° to 75°	FP = 0° OP = 26° ✳ = 46.5° OT = 61° to 75°	NOMINAL TRAVELS AND RELATED TERMINALS CONTACT CLOSED CONTACT OPEN ✳ POSITIVE OPENING TO IEC 947-5-1-3
120 (1.1)	**110** (1.0)	**110** (1.0)	**110** (1.0)	NORMAL OPERATING TORQUE MAX **Nmm (in.lbs)**
140 (1.3)	**160** (1.5)	**170** (1.6)	**150** (1.4)	MAXIMUM DISCONNECT TORQUE **Nmm (in.lbs)**

FIG. 1

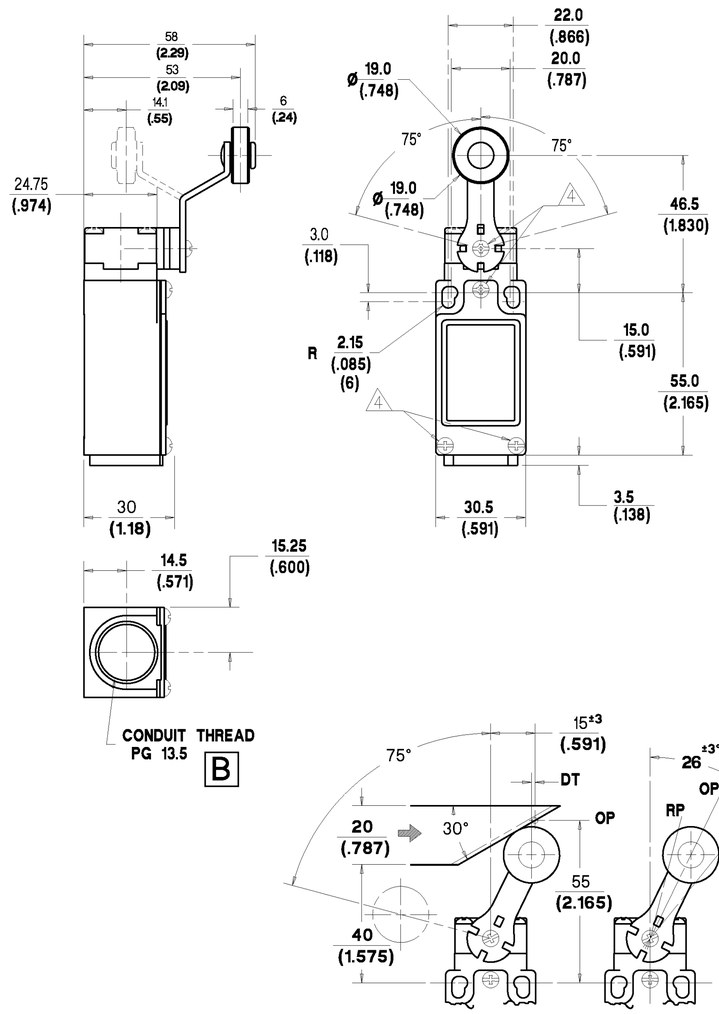

NOTES:-

1. ZINC DIECAST BODY AND HEAD WITH STEEL COVER. BODY AND COVER FINISHED IN MICRO SWITCH BLUE EPOXY PAINT. HEAD FINISHED IN BLACK EPOXY PAINT.
2. MINIMUM OPERATING VELOCITY (Vmin) = 2.0 MM/S
   MAXIMUM OPERATING VELOCITY (Vmax) = 200 MM/S
   MAXIMUM OPERATING FREQUENCY (Fmax) = 250 OPS/MIN
   (THESE LIMITS APPLY TO CAM OPERATION AS SHOWN IN THE ABOVE DIAGRAMS ONLY)
3. FREE POSITION (FP), OPERATING POINT (OP), OVERTRAVEL (OT) AND PRETRAVEL (PT) ALL TO EN50047.

4 MAXIMUM TIGHTENING TORQUE FOR FIXING SCREW = 0.5Nm (4.4in.LB)

NO CHANGES CAN BE MADE TO THIS DRAWING WITHOUT JOINT NEWHOUSE/FREEPORT APPROVAL

NOTE:-
ANY STANDARD LISTING WITH SUFFIX 'RS' OR 'FE' IS PERMITTED.

FIG. 2

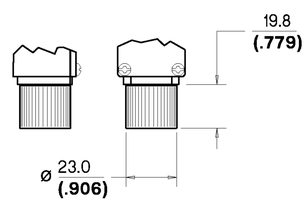

1/2" NPT X 14 CONDUIT THREAD ADAPTER

A

FIG. 3

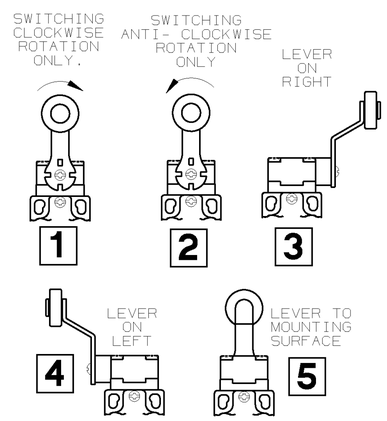

01 OR 07 — 03 OR 33 — 04 OR 34 — 06 OR 36

06: BASIC SWITCH WITH SILVER CONTACTS
36: BASIC SWITCH WITH GOLD PLATED CONTACTS

SIDE ROTARY ACTUATOR (SEE FIG. 1)
ROLLER MATERIAL A = PLASTIC : B = METAL.
BASIC SWITCH
CONDUIT THREAD (SEE FIGS. 1 & 2)
HEAD ORIENTATION AND LEVER DIRECTION OF OPERATION (SEE FIG. 3)
EN50047 BODY TYPE (SEE FIG. 1)

GLC X XX A5 X – X XXXX

MODIFICATION CODE

1/2" NPT X 14 CONDUIT THREAD ADAPTER: A
PG 13.5 CONDUIT THREAD: B
M20 X 1.5 CONDUIT THREAD: C
PF 1/2 CONDUIT THREAD: D

01, 03, 04, 06, 07, 33, 34, 36

A, B

1, 2, 3, 4, 5

BLANK = NO ROLLER FITTED.
BLANK = LEVER TO FRONT, SWITCHING IN BOTH DIRECTIONS.

C021 — CABLE 5 WIRE, WITH GROUND, LAST CHARACTER IS CABLE LENGTH 1 = 1MTR. CABLE LENGTHS ARE FROM 1 TO 9 METRES. ONLY AVAILABLE WITH CONDUIT THREAD TYPE 'B'.

Q01 — CONNECTOR, 4 PIN MICRO. ONLY AVAILABLE WITH CONDUIT THREAD TYPE 'B'.

Q02 — CONNECTOR, 5 PIN MICRO TWIN KEYWAY. ONLY AVAILABLE WITH CONDUIT THREAD TYPE 'B'.

Q03 — CONNECTOR, 4 PIN MINI. ONLY AVAILABLE WITH CONDUIT THREAD TYPE 'B'.

Q04 — CONNECTOR, 5 PIN MINI. ONLY AVAILABLE WITH CONDUIT THREAD TYPE 'B'.

Q07 — CONNECTOR, 5 PIN MICRO. ONLY AVAILABLE WITH CONDUIT THREAD TYPE 'B'.

NOTE:
FOR CONNECTION DIAGRAMS AND ADDITIONAL ELECTRICAL, ENVIRONMENTAL & DIMENSIONAL INFORMATION SEE DRAWING GL-49212.

STANDARD SILVER CONTACTS		GOLD PLATED CONTACTS	ENVIRONMENTAL	APPROVALS
ELECTRICAL RATING		ELECTRICAL RATING		
AC	DC			
A300 AC15 Ue Ie VOLTS AMPS 120 6 240 3	Q300 DC13 Ue Ie VOLTS AMPS 125 0.55 250 0.27	I_{th} = 10A 1V 10μA MIN. 50V 100mA MAX.	IP66 NEMA 1, 4, 12, 13 TEMP RANGE : -25°C TO 85°C -13°F TO 185°F STORAGE : -40°C TO 85°C -40°F TO 185°F SHOCK : 50G PER IEC 68-2-27 VIBRATION : 10G PER IEC 68-2-6	UL CSA IEC 947-5-1 EN50047

THE COPYRIGHT OF THIS DRAWING IS THE PROPERTY OF HONEYWELL LTD. THE DRAWING IS SUPPLIED IN CONFIDENCE AND MUST NOT BE USED FOR ANY PURPOSE OTHER THAN THAT FOR WHICH IT IS SUPPLIED.

THIRD ANGLE PROJECTION | SCALE 1:1 | DIMENSIONS ARE IN MM/INCHES. | MODIFY ON CAD SYSTEM ONLY

DRAWN	M. LOCH	4/95
CHECK	I. WEIR	4/95
DESIGN	J. BOYD	4/95
AUTHOR'N	P. TRICKETT	4/95

MTG-GL-197

REPLACES

DRAWING NUMBER A018-185

ISSUE 0

RELEASE NUMBER

REVISIONS

2	9/96	A018-275
3	12/96	A018-293
4	7/97	CO-000083
5	8/97	CO-000106
6	CO/395	I WEIR 6/98