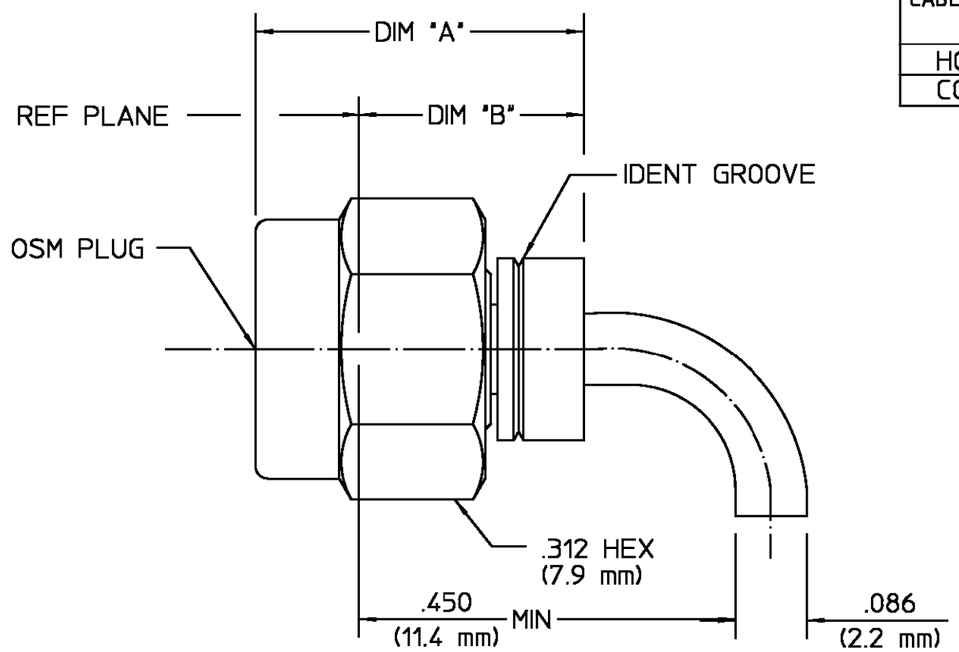

DESIGNED FOR USE WITH .085 SEMI-RIGID CABLE	
CABLE ENTRY DIAMETER MINIMUM	
HOUSING	.088
CONTACT	.021

REVISIONS

REV	DESCRIPTION	DATE	APPROVED
04_0	REVISED	11/22/94	JRD

BEFORE CRIMPING	.465 REF (11.8 mm)	.348 REF (8.8 mm)
AFTER CRIMPING	.393 REF (10.0 mm)	.278 REF (7.1 mm)
	DIM "A"	DIM "B"

COMPONENT	MATERIAL	FINISH
HOUSING COUPLING NUT BUSHING	STAINLESS STEEL PER ASTM-A484 AND ASTM-A582, TYPE 303	PASSIVATE PER QQ-P-35
DIELECTRIC	PTFE FLUOROCARBON PER ASTM-D-1457	N/A
CENTER CONTACT	BERYLLIUM COPPER PER ASTM-B-196 OR ASTM-B-197, ALLOY C17300, CONDITION H	GOLD PLATE PER MIL-G-45204
GASKET	SILICONE RUBBER PER ZZ-R-765	N/A

NOTES:

1. CAPTURED CENTER CONTACT
2. PICTORIAL VIEW IS AFTER CRIMPING
3. MIN STRAIGHT CABLE LENGTH: .175
4. IT IS SUGGESTED TO BEND CABLE PRIOR TO CRIMPING

UNLESS OTHERWISE SPECIFIED DIMENSIONS ARE IN INCHES

FRAC.	DEC.	ANGLES
± 1/64	±.005	± 1°

DRAWN BY	D.CAM	DATE 9/17/84
CHECKED BY	R.HALEY	9/18/84
APP'D BY	PFH	9/18/84

AMP

AMP Incorporated
140 Fourth Avenue
Waltham, MA 02451-7599

These drawings and specifications are the property of M/A COM Interconnect Div. and shall not be reproduced or copied or used in whole or in part as the basis for the manufacture or sale o f item(s) without written permission.

USE ASS'Y PROCEDURE

NO. A.P. 408-04695 (20-286)

TITLE
OSM STRAIGHT CABLE PLUG
COMPRESSION CRIMP ATTACHMENT

SIZE	CODE IDENT NO.		REV
B	26805	2001-5385-02	04_0
SCALE 6:1			SHEET 1 OF 1

CUSTOMER DRAWING

AMP PART # 1050598-1
SHEET 1 OF 1 REV A