ECS INC INTERNATIONAL

RoHS COMPLIANT

- Cost effective
- Low profile
- Pb Free/RoHS Compliant

HC-46X
Quartz Crystal

The HC-46X is the miniature low profile resistance weld type Thru Hole quartz crystal. Reduces footprint of HC-49USX by 50%.

OPERATING CONDITIONS / ELECTRICAL CHARACTERISTICS

PARAMETERS	CONDITIONS	HC-46X			UNITS
		MIN	TYP	MAX	
Frequency Range	fo	6.000		40.000	MHz
Frequency Tolerance	at +25°C			± 30	ppm
Frequency Stability ref @ 25°C	Standard -10 to +70°C			± 50	ppm
Shunt Capacitance	Co			7	pF
Load Capacitance (CL)	Specify in P/N	10	20	Series	pF
Drive Level				100	µW
Operating Temperature	Standard	-10		+70	°C
Storage Temperature		-40		+85	°C
Aging (First Year)	@ +25°C ±3°C			±5	ppm

EQUIVALENT SERIES RESISTANCE/MODE OF OSCILLATION

FREQUENCY RANGE (MHz)	MODE OF OSC	MAX ESR Ω	FREQUENCY RANGE (MHz)	MODE OF OSC	MAX ESR Ω
6.000 ~ 11.999	Fundamental	200	16.000 ~ 29.999	Fundamental	50
12.000 ~ 15.999	Fundamental	60	30.000 ~ 40.000	Fundamental	40

PACKAGE DIMENSIONS (mm)

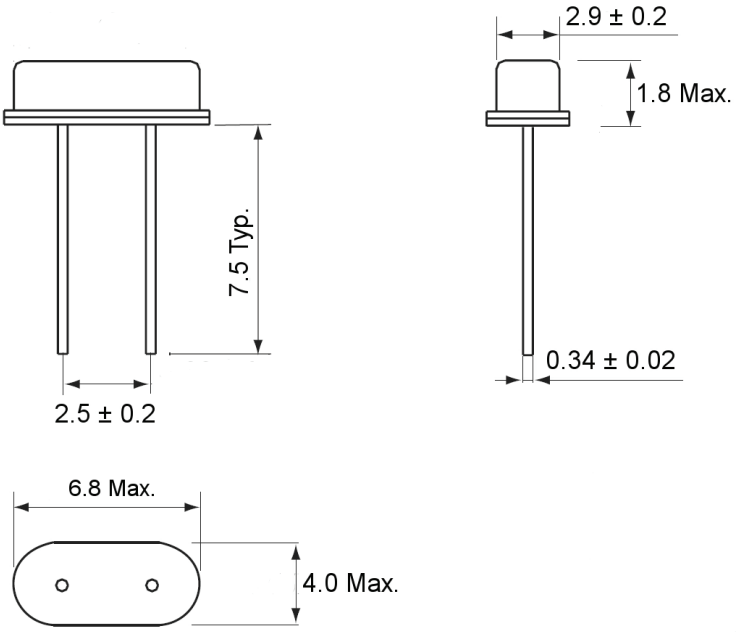

Figure 1) Side, Bottom and End views

Figure 2) Size Comparison

PART NUMBERING GUIDE: Example ECS-200-20-46X

ECS - Frequency Abbreviation - Load Capacitance - Package

- Frequency Abbreviation: 200 = 20.000 MHz, See P/N Guide
- Load Capacitance: 20 =20 pF, S=Series
- Package: 46X = HC-46X

Custom Options

- Tolerance: A= ±25 ppm, J= ±20 ppm, R= ±15 ppm, C= ±10 ppm
- Stability: D= ±100 ppm, E= ±50 ppm, G= ±30 ppm, H= ±25 ppm, T= ±20 ppm, W= ±15 ppm, K= ±10 ppm
- Temp Range: L= -10 ~ +70°C, M= -20 ~ +70°C, N= -40 ~ +85°C

**Consult Factory for available stability options over extended temp range.*

1105 South Ridgeview Road • Olathe, KS 66062 • Phone: 913.782.7787 • Fax: 913.782.6991 • www.ecsxtal.com