THIS DRAWING IS UNPUBLISHED. RELEASED FOR PUBLICATION –,– .
© COPYRIGHT – By – ALL RIGHTS RESERVED.

LOC	DIST
AL	2

REVISIONS

P	LTR	DESCRIPTION	DATE	DWN	APVD
	A1	REDRAWN PER ECO–12–018155	30JAN13	KH	DR

1. STAMP AMP 4 APPROX AS SHOWN
2. MATERIAL: COPPER PER ASTM B152
3. FINISH: TIN PLATE PER ASTM B545

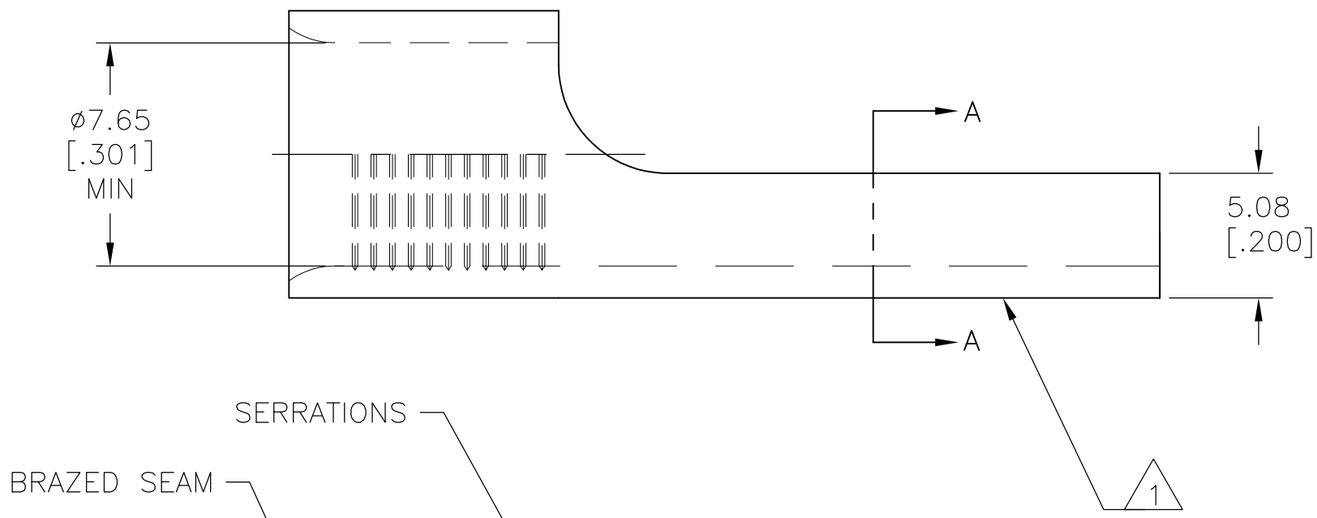

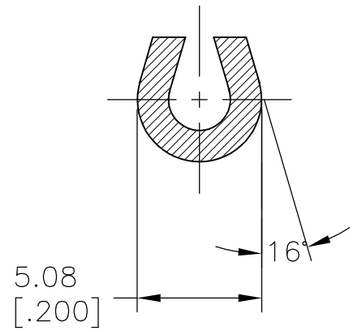

SECTION A–A

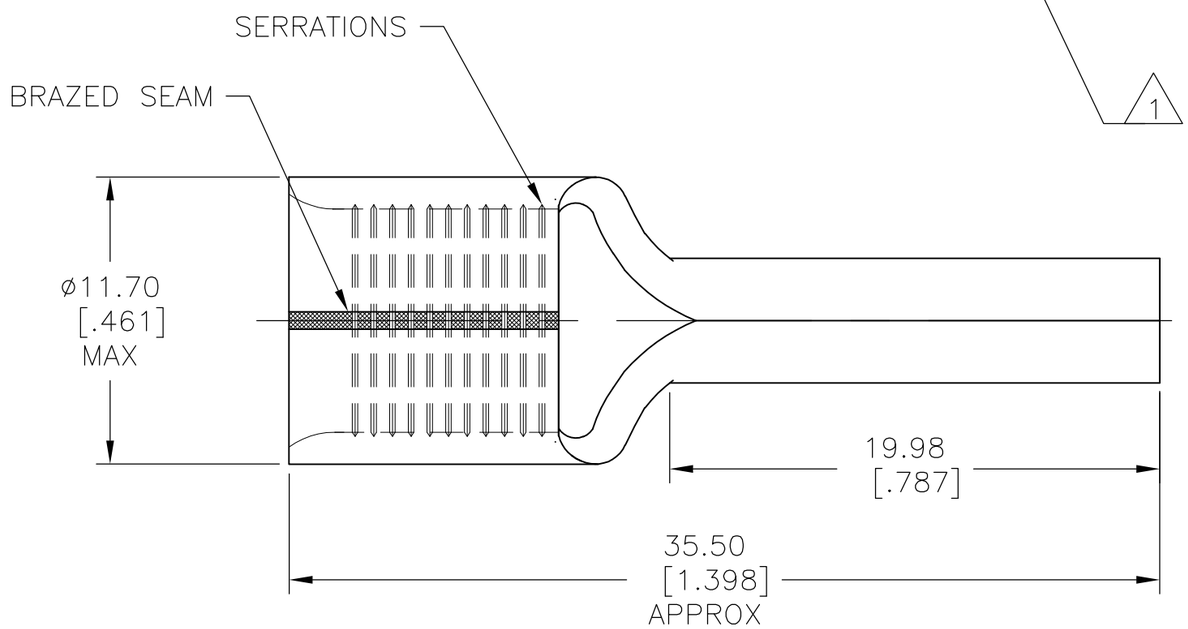

736014

PART NO

AMP INCORPORATED
CUSTOMER SERVICE SYSTEMS

FOR ADDITIONAL PRODUCT INFORMATION OR COPIES OF DRAWINGS AND TECHNICAL DOCUMENTS	PRODUCT INFORMATION CENTER 1–800–522–6752
FOR APPLICATION TOOLING INFORMATION	TOOLING ASSISTANCE CENTER 1–800–722–1111
FOR ORDER ENTRY	1–800–526–5142

THIS DRAWING IS A CONTROLLED DOCUMENT FOR AMP INCORPORATED. IT IS SUBJECT TO CHANGE AND THE CONTROLLING ENGINEERING ORGANIZATION SHOULD BE CONTACTED FOR THE LATEST REVISION.

MAX RECOMMENDED OPERATING TEMPERATURE: 170°C [338°F] MAX

VOLTAGE RATING: N/A

WIRE: 16.8–26.7mm²[33,100–52,600] CIR MILLS SOLID OR STRANDED

THIS DRAWING IS A CONTROLLED DOCUMENT.

DIMENSIONS: mm [INCHES]

TOLERANCES UNLESS OTHERWISE SPECIFIED:

0 PLC	± –
1 PLC	± 0.13[.005]
2 PLC	± –
3 PLC	± –
4 PLC	± –
ANGLES	± –

MATERIAL 2

FINISH 3

DWN	KIRAN HOLAL	30JAN13
CHK	ROHDE DANIEL	30JAN13
APVD	ROHDE DANIEL	30JAN13
PRODUCT SPEC	—	
APPLICATION SPEC	—	
WEIGHT	—	

TE Connectivity

NAME: WIRE PIN, SOLISTRAND, 4 AWG

SIZE	CAGE CODE	DRAWING NO	RESTRICTED TO
A3	00779	C–736014	—

CUSTOMER DRAWING | SCALE 4:1 | SHEET 1 OF 1 | REV A1

1470–19 (3/11)