TECHNICAL DATA

'' D '' SUBMINIATURE CONNECTORS

SHELL : Steel.

BODY : Glass filled thermoplastic.
Flame retardant to UL 94 V-0.
Colour : Black.

CONTACTS : Material for sockets : bronze.
Material for pins : brass.
Finish of contact mating area :
Gold over Nickel.

ELECTRICAL: Voltage rating 300 V eff at 50Hz.
Nominal current 7,5 A.

Contact resistance <8.5m Ohms.
Insulation resistance >5000 M Ohms.

CLIMATIC: Temperature range -55°C up to +85° C
Damp heart 21 days (40° C - 95 % RH)
Other climatic specifications in accordance with NF C 93-425

MECHANICAL: Mating and unmating force size E 30 N max. 3.5 N mini.
A 50 N max. 4.4 N mini.
B 83 N max. 8.0 N mini.
C 123 N max. 11.0 N mini.
D 166 N max. 14.5 N mini.

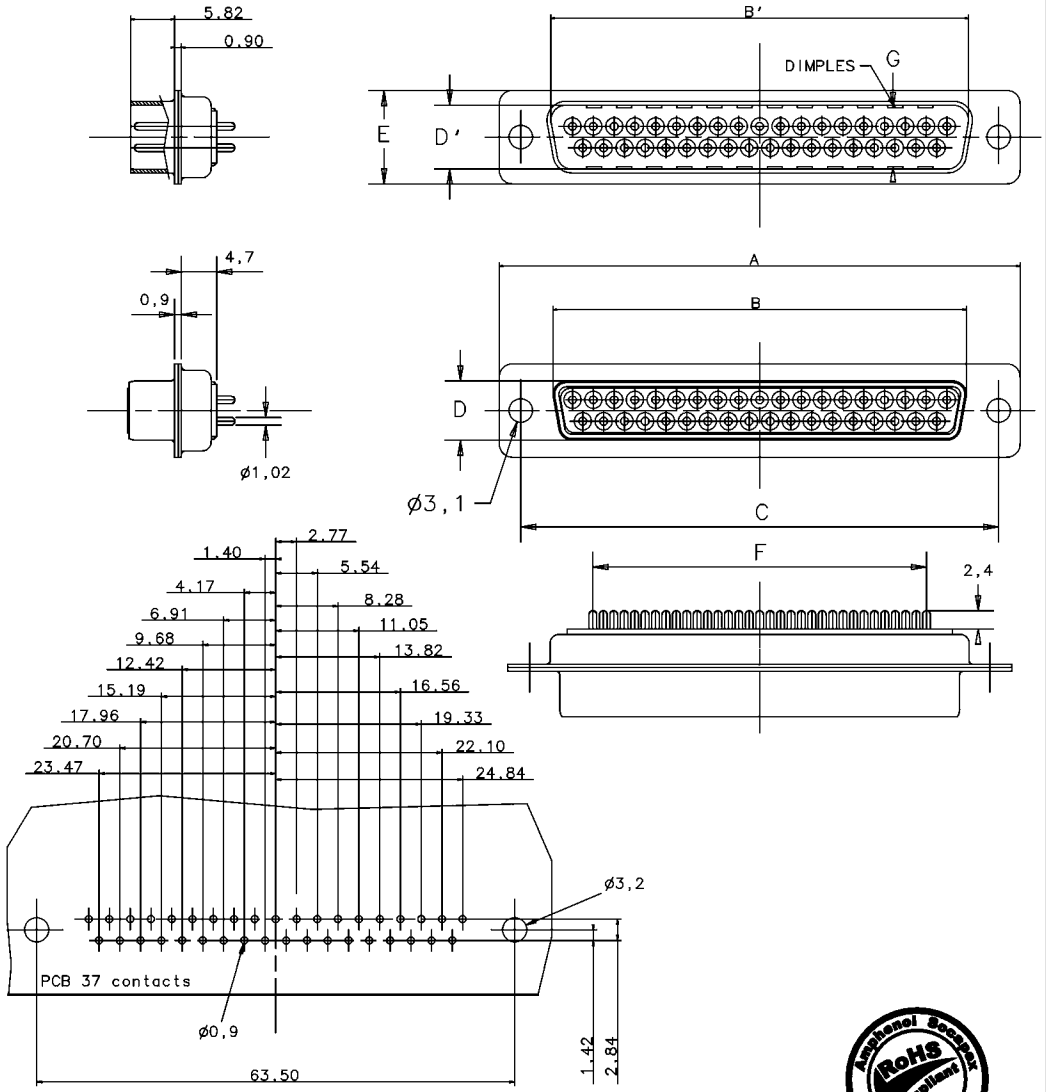

L 77D C 37 S V

- L = RoHS
- 77D Tinned shell / 717D Tinned shell with dimples
- Shell size : E - A - B - C - D
- Mounting type : without
- Configuration: 9-15-25-37-50
- Contact type : S = female / P = male
- Straight Contact

Taille boitier	A	B'	B	C	D'	D	E	F ±0,05	Pas	G	*
E	31,19 30,43	16,46 16,21	17,04 16,79	25,12 24,87	8,03 7,77	8,48 8,23	12,93 12,17	10,98	2.74	7,62	2x3
A	39,52 38,76	24,79 24,54	25,37 25,12	33,45 33,20	8,03 7,77	8,48 8,23	12,93 12,17	19,20	2.74	7,62	2x5
B	53,42 52,65	38,51 38,25	39,09 38,84	47,17 46,91	8,03 7,77	8,48 8,23	12,93 12,17	33,12	2.76	7,62	2x8
C	69,70 68,94	54,97 54,71	55,55 55,30	63,63 63,37	8,03 7,77	8,48 8,23	12,93 12,17	49,68	2.76	7,62	2x12
D	67,31 66,55	52,56 52,30	52,93 52,68	61,24 60,99	10,87 10,62	11,33 10,95	15,75 14,99	44,20	2.76	10,5	2x12

Amphenol Socapex
Usine de Dole

ECHELLE 2 | ENSEMBLE

IND.	MODIFICATION	DATE	Execut	Approb
A	Creation plan	13/03/2006	Vallot	

N SERIE 017F

DESIGNATION L**7D****V

DOSSIER:NOTICE-17D

N CLIENT | N OUTIL | N ETUDE | DATE DU TIRAGE | 17D

COMMUNICATION ET UTILISATION INTERDITES SAUF AUTORISATION