PRODUCT NUMBER
SEE SHEET 3

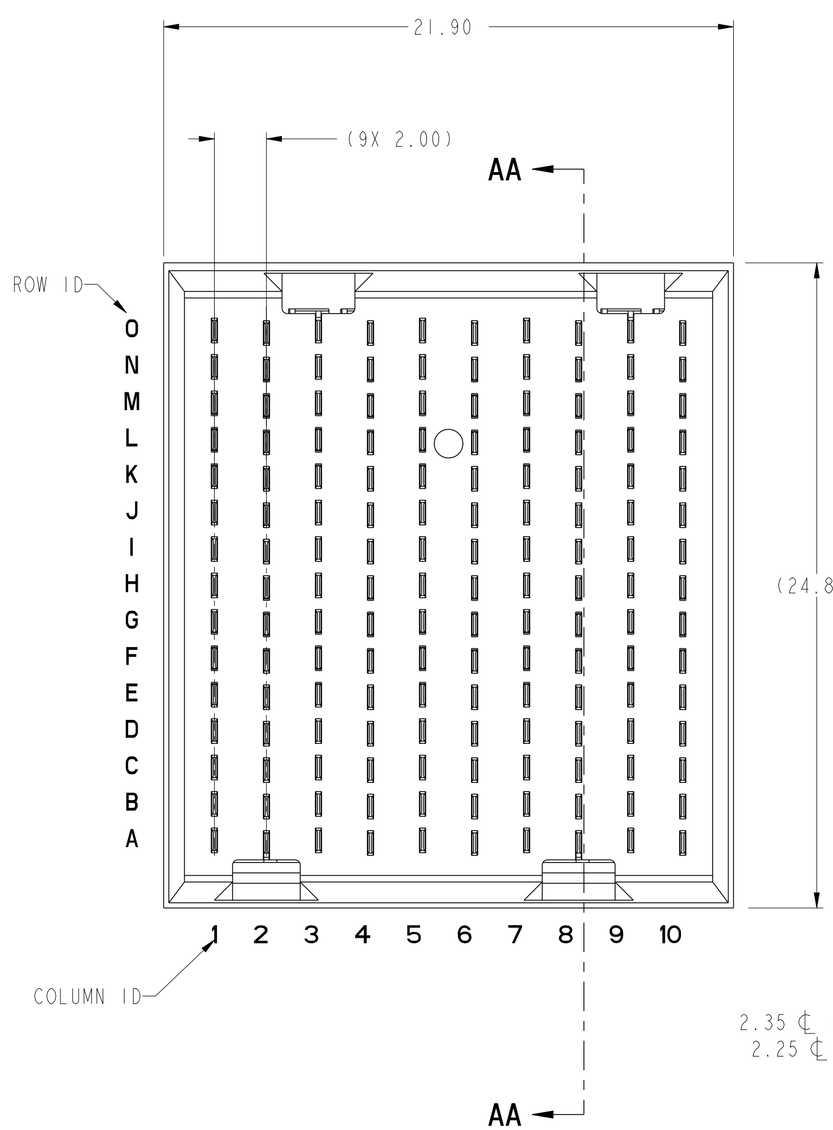

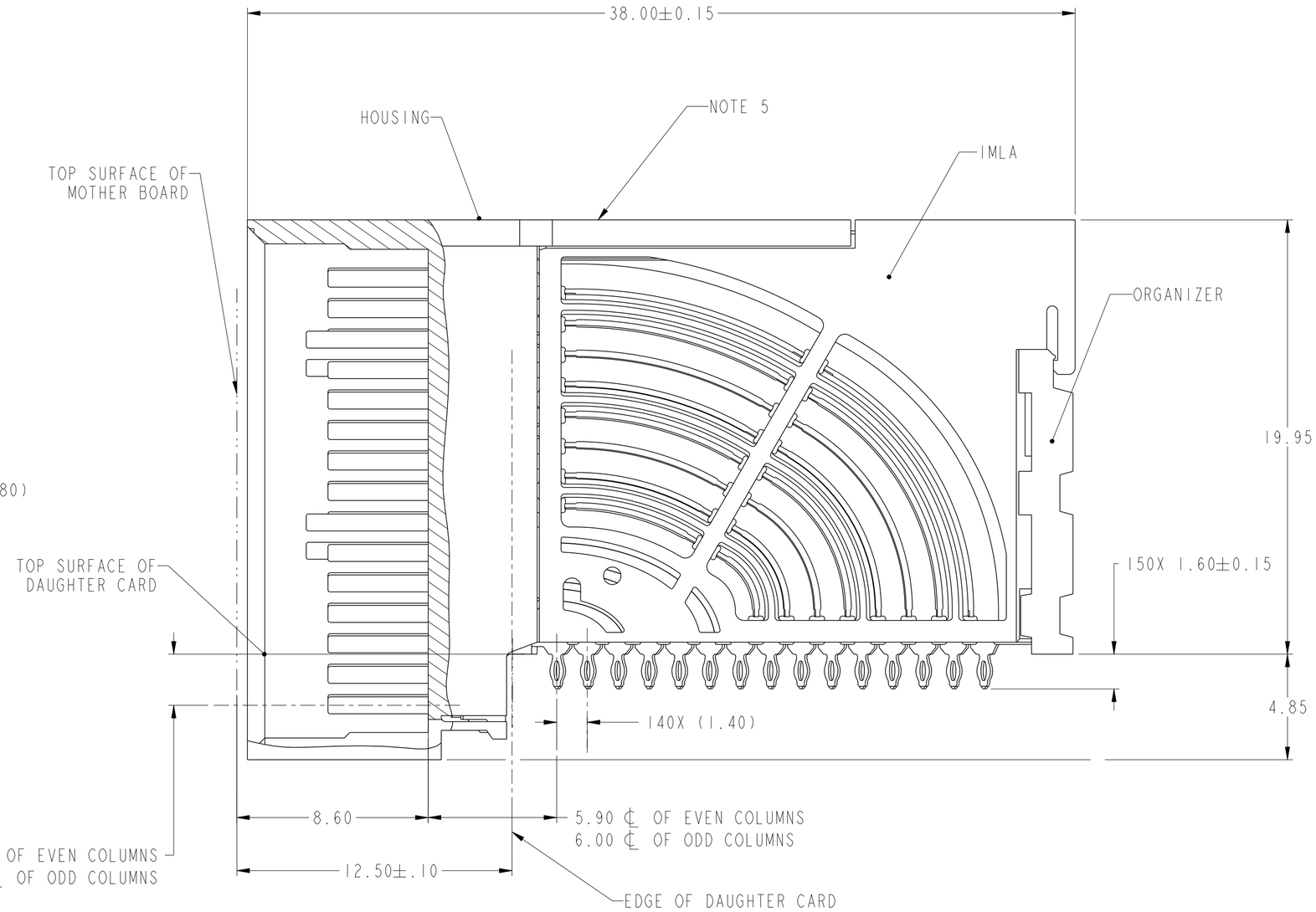

SECTION AA-AA

spec ref	---			dr	Lin-Soe Ngwe	2012/12/05	projection	MM	size A2 / scale 10:1
tolerance std ASME Y14.5M	TOLERANCES UNLESS OTHERWISE SPECIFIED			eng	Art Lin	2016/11/10			ecn no ELX-DG-25255-1
				chr	Heaven Cen	2016/11/17			
				appr	Pei-Ming Zheng	2016/11/18	product family -		rel level Released
surface -	linear	0.X	±.3	Amphenol FCi	title: AirMax VS2 R.A. HEADER 5 Pair, 150 pos, 2mm, 10 Col		dwg no 10123529		rev D
		0.XX	±.15						
		0.XXX	±.050						
-	angular	0°	±2°	www.fci.com	cat. no. -		Product - Customer Drw		sheet 1 of 3

© 2016 AFCI

Creo File - REV E - 2016-02-12

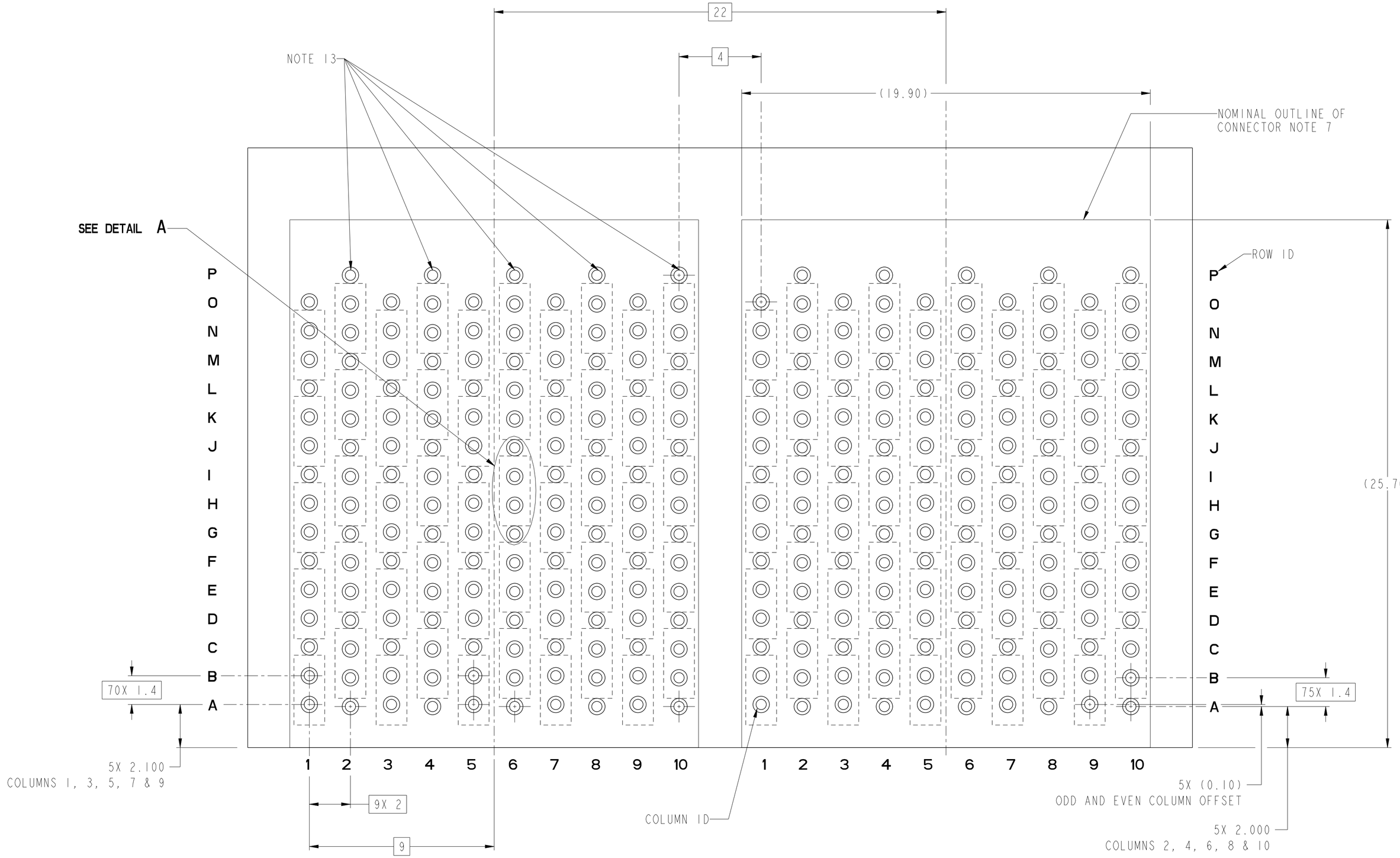

RECOMMENDED PCB LAYOUT
FOR DIFFERENTIAL APPLICATIONS
COMPONENT SIDE
(TWO ADJACENT FOOTPRINTS SHOWN)
NOTES 8 & 11

SCALE 8:1

spec ref	---		dr	Lin-Soe Ngwe	2012/12/05	projection	MM	size A2 / scale 8:1
tolerance std ASME Y14.5M	TOLERANCES UNLESS OTHERWISE SPECIFIED		eng	Art Lin	2016/11/10			ecn no ELX-DG-25255-1
			chr	Heaven Cen	2016/11/17			
			appr	Pei-Ming Zheng	2016/11/18	product family -		rel level Released
surface -	linear	0.X ±.3	Amphenol FCi	title	AirMax VS2 R.A. HEADER	dwg no	10123529	rev D
		0.XX ±.15			5 Pair, 150 pos, 2mm, 10 Col			
		0.XXX ±.050						
-	angular	0° ±2°	www.fci.com	cat. no. -	Product - Customer Drw			sheet 2 of 3

© 2016 AFCI

Creo File - REV E - 2016-02-12

PRODUCT NUMBER	PRESS-FIT TAIL PLATING TYPE	REMARK
10123529-101	TIN/LEAD ALLOY OVER NICKEL	1-SIDE PLATING (CUSTOMER SPECIAL)
10123529-101LF	TIN OVER NICKEL (LEAD FREE)	
10123529-102	TIN/LEAD ALLOY OVER NICKEL	2-SIDE PLATING
10123529-102LF	TIN OVER NICKEL (LEAD FREE)	

1 - CONNECTOR MATERIALS:
HOUSING: HIGH TEMP THERMOPLASTIC, NATURAL, UL94-V0
IMLA PLASTIC: HIGH TEMP THERMOPLASTIC, BLACK, UL94-V0
CONTACT: COPPER ALLOY
ORGANIZER: HIGH TEMP THERMOPLASTIC, NATURAL, UL94-V0

2 - CONTACT PLATING:
SEPARABLE INTERFACE:
PERFORMANCE-BASED PLATING, QUALIFIED TO MEET THE REQUIREMENTS OF FCI PRODUCT SPECIFICATION GS-12-0956 INCLUDING TELCORDIA GR-1217-CORE (NOVEMBER 1995) CENTRAL OFFICE TEST SEQUENCE

PRESS-FIT TAILS: SEE TABLE

3 - PRODUCT SPECIFICATION: GS-12-0956

4 - APPLICATION SPECIFICATION: GS-20-0305

5 - PRODUCT MARKING, (PROTOTYPE, PART NUMBER & LOT CODE), ON THIS SURFACE.

6 - POSITIONS "F" AND "L" OF ODD NUMBERED COLUMNS AND POSITIONS "G" AND "M" OF EVEN NUMBERED COLUMNS CORRESPOND TO EARLY MATE HEADER PINS.

7 - CONNECTOR OUTLINE MAY BE SCREEN PRINTED ONTO CUSTOMER PCB TO BE USED AS A GUIDE FOR CONNECTOR PLACEMENT.

8 - REFER TO CUSTOMER DRAWING 10104444 FOR INFORMATION ON PCB HOLE DIAMETERS AND PLATING OPTIONS

9 - LEAD FREE PRODUCT MEETS THE EUROPEAN UNION DIRECTIVES & OTHER COUNTRY REGULATIONS AS DESCRIBED IN GS-22-008

10 - PACKAGING MEETS GS-14-920 LEAD FREE LABELING SPECIFICATION.

11 - GROUND CONTACTS (C, F, I, L, & O IN ODD COLUMNS AND A, D, G, J, & M IN EVEN COLUMNS) REQUIRE (∅0.50) FINISHED HOLES. SIGNAL LOCATIONS REQUIRE (∅0.50) FINISHED HOLES

12 - THESE OUTER VIAS (P) ARE OPTIONAL. WHILE NO CONNECTOR EONS ARE PRESSED INTO THESE HOLES WE RECCOMMEND (∅0.500) FINISHED HOLES AT THESE LOCATIONS TO PROVIDE GROUND SYMMETRY THROUGH THE PCB.

13 - A △ SYMBOL WILL BE NEXT TO ANY DIMENSION, VIEW, OR NOTE, WHICH HAS BEEN MODIFIED WITH THE CURRENT DRAWING REVISION.

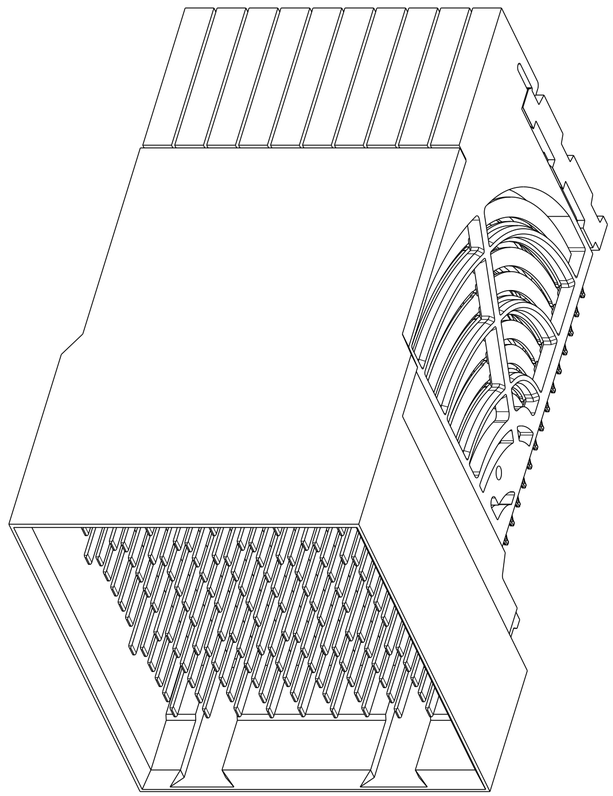

10123529-101 OR -101LF
10123529-102 OR -102LF

SCALE 4:1

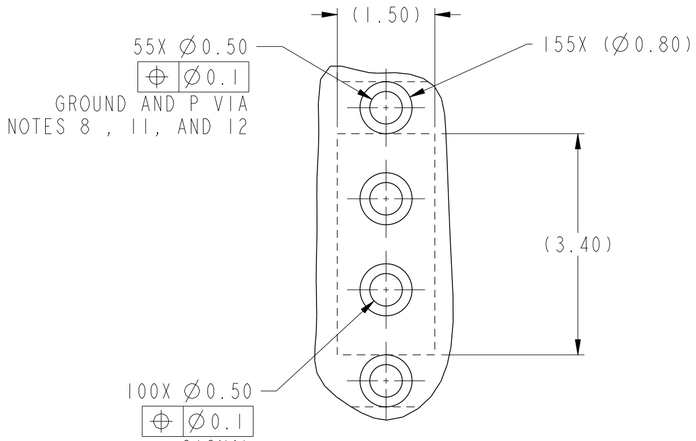

DETAIL A
SCALE 15:1

spec ref	---	dr	Lin-Soe Ngwe	2012/12/05	projection	MM	size A2 / scale 10:1
tolerance std ASME Y14.5M	TOLERANCES UNLESS OTHERWISE SPECIFIED	eng	Art Lin	2016/11/10			ecn no ELX-DG-25255-1
		chr	Heaven Cen	2016/11/17			
		appr	Pei-Ming Zheng	2016/11/18	product family -		rel level Released
surface -	linear 0.X ±.3 / 0.XX ±.15 / 0.XXX ±.050	Amphenol FCi	title: AirMax VS2 R.A. HEADER, 5 Pair, 150 pos, 2mm, 10 Col		dwg no 10123529		rev D
-	angular 0° ±2°	www.fci.com	cat. no. -		Product - Customer Drw		sheet 3 of 3

© 2016 AFCI