EH3625ETTTS-12.288M

Click part number to visit Part Number Details page

Ecliptek

REGULATORY COMPLIANCE (Data Sheet downloaded on Sep 7, 2017)

Lead Free COMPLIANT | EU RoHS 2011/65 + 2015/863 COMPLIANT | China RoHS COMPLIANT | REACH 174 SVHC COMPLIANT

Click badges to download compliance docs

Regulatory Compliance standards are subject to updates by governing bodies. Click the badges to download the latest compliance docs for this part number directly from Ecliptek.

DRC CONFLICT FREE

ITEM DESCRIPTION

Quartz Crystal Clock Oscillators XO (SPXO) LVCMOS (CMOS) 3.3Vdc 4 Pad 3.2mm x 5.0mm Ceramic Surface Mount (SMD) 12.288MHz ±25ppm -40°C to +85°C

ELECTRICAL SPECIFICATIONS

Nominal Frequency	12.288MHz
Frequency Tolerance/Stability	±25ppm Maximum (Inclusive of all conditions: Calibration Tolerance at 25°C, Frequency Stability over the Operating Temperature Range, Supply Voltage Change, Output Load Change, First Year Aging at 25°C, Shock, and Vibration)
Aging at 25°C	±5ppm/year Maximum
Operating Temperature Range	-40°C to +85°C
Supply Voltage	3.3Vdc ±10%
Input Current	35mA Maximum (No Load)
Output Voltage Logic High (Voh)	2.7Vdc Minimum (IOH = -8mA)
Output Voltage Logic Low (Vol)	0.5Vdc Maximum (IOL = +8mA)
Rise/Fall Time	6nSec Maximum (Measured at 20% to 80% of waveform)
Duty Cycle	50 ±5(%) (Measured at 50% of waveform)
Load Drive Capability	30pF Maximum
Output Logic Type	CMOS
Pin 1 Connection	Tri-State (High Impedance)
Tri-State Input Voltage (Vih and Vil)	70% of Vdd Minimum to enable output, 20% of Vdd Maximum to disable output, No Connect to enable output.
Absolute Clock Jitter	±250pSec Maximum, ±100pSec Typical
One Sigma Clock Period Jitter	±50pSec Maximum, ±40pSec Typical
Start Up Time	10mSec Maximum
Storage Temperature Range	-55°C to +125°C

ENVIRONMENTAL & MECHANICAL SPECIFICATIONS

Fine Leak Test	MIL-STD-883, Method 1014, Condition A
Gross Leak Test	MIL-STD-883, Method 1014, Condition C
Mechanical Shock	MIL-STD-202, Method 213, Condition C
Resistance to Soldering Heat	MIL-STD-202, Method 210
Resistance to Solvents	MIL-STD-202, Method 215
Solderability	MIL-STD-883, Method 2003
Temperature Cycling	MIL-STD-883, Method 1010
Vibration	MIL-STD-883, Method 2007, Condition A

Ecliptek, LLC 5458 Louie Lane, Reno, NV 89511 1-800-ECLIPTEK or 714.433.1200

EH3625ETTTS-12.288M

Click part number to visit Part Number Details page

MECHANICAL DIMENSIONS (all dimensions in millimeters)

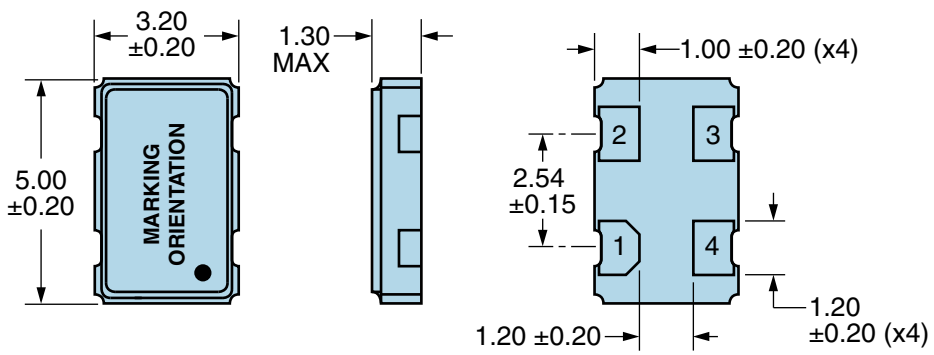

PIN	CONNECTION
1	Tri-State
2	Ground/Case Ground
3	Output
4	Supply Voltage

LINE	MARKING
1	**E12.288** *E=Ecliptek Designator*
2	**XXXXX** *XXXXX=Ecliptek Manufacturing Identifier*

Suggested Solder Pad Layout

All Dimensions in Millimeters

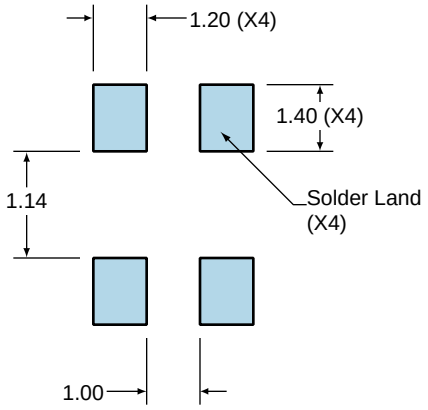

All Tolerances are ±0.1

Ecliptek, LLC 5458 Louie Lane, Reno, NV 89511 1-800-ECLIPTEK or 714.433.1200

EH3625ETTTS-12.288M

Click part number to visit Part Number Details page

OUTPUT WAVEFORM & TIMING DIAGRAM

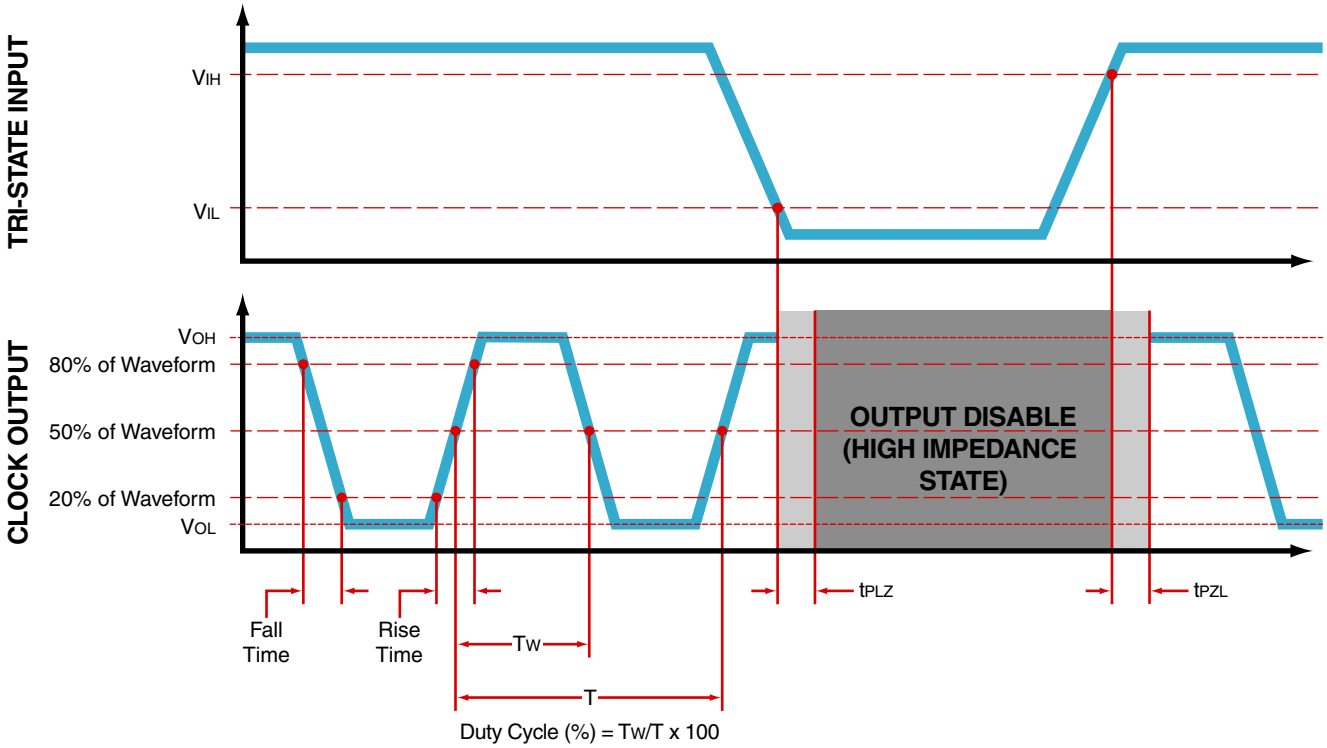

Ecliptek, LLC 5458 Louie Lane, Reno, NV 89511 1-800-ECLIPTEK or 714.433.1200

EH3625ETTTS-12.288M

Click part number to visit Part Number Details page

Test Circuit for CMOS Output

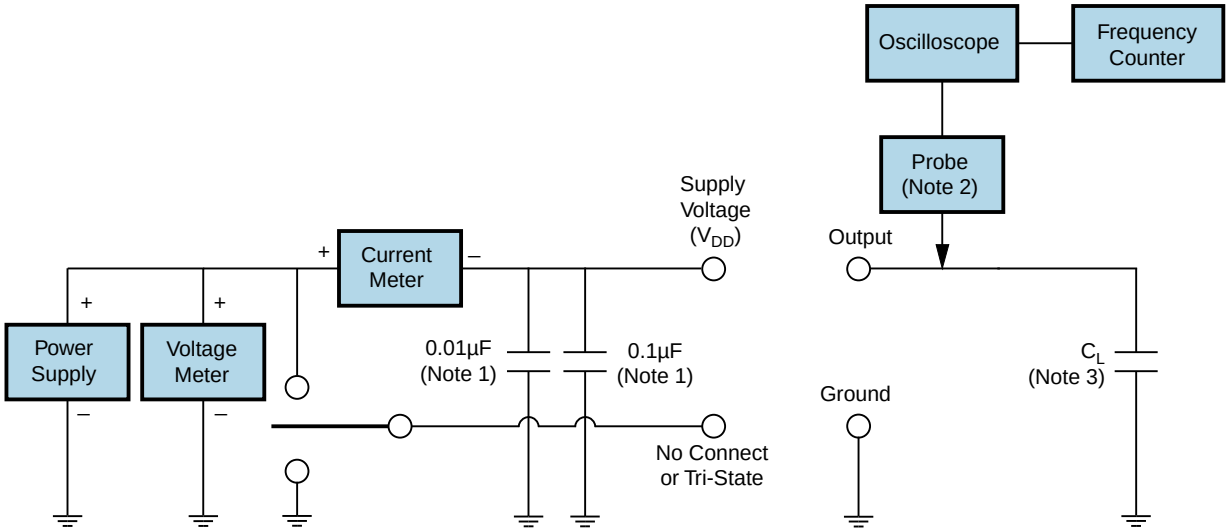

Note 1: An external 0.1µF low frequency tantalum bypass capacitor in parallel with a 0.01µF high frequency ceramic bypass capacitor close to the package ground and V_{DD} pin is required.
Note 2: A low capacitance (<12pF), 10X attenuation factor, high impedance (>10Mohms), and high bandwidth (>300MHz) passive probe is recommended.
Note 3: Capacitance value C_L includes sum of all probe and fixture capacitance.

Ecliptek, LLC 5458 Louie Lane, Reno, NV 89511 1-800-ECLIPTEK or 714.433.1200