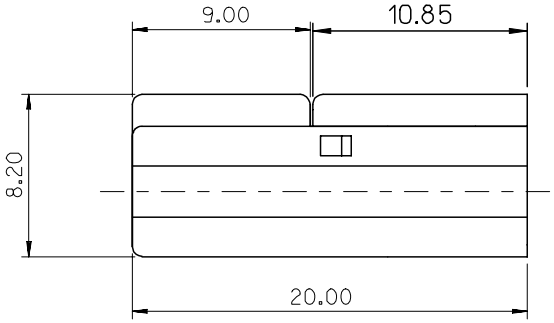

NOTES

1. MATERIALS

ENG.NO.	MATERIAL	COLOR
35544-0400	POLYESTER (PBT) UL94V-0	NATURAL (WHITE)
35544-9400	PBT/PC,UL94V-0	

2. APPLICABLE TERMINAL : .110 SLIP-ON REC' 35711-07*0/08*0

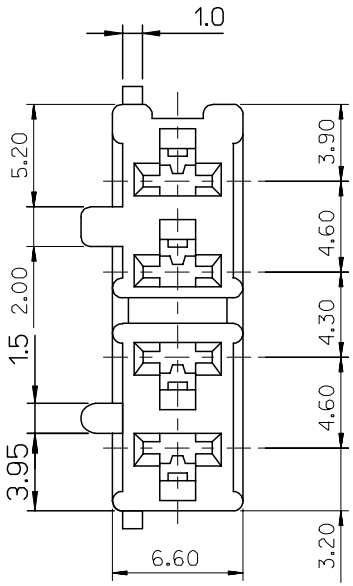

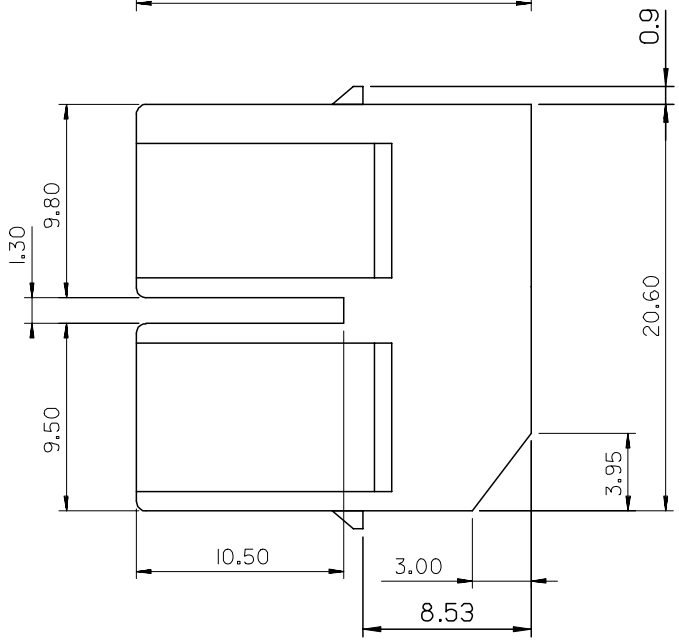

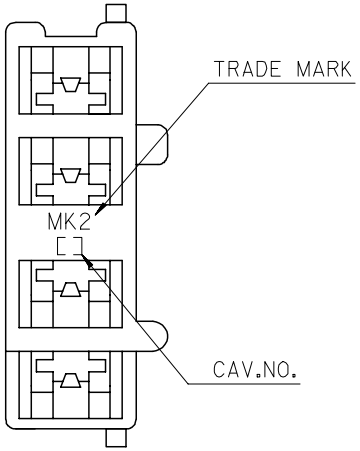

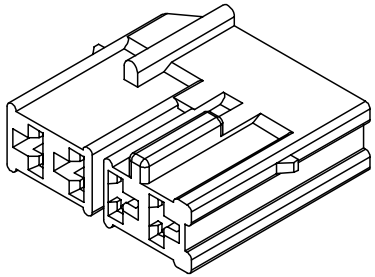

REV	DESCRIPTION
B	REVISED EC NO. KOR 2005-0203 DRWN: J.B.JIN 05/08/05 CH'K: W.Y.YANG APPR: C.W.LEE

QUALITY SYMBOLS: MAJOR = 0; CRITICAL (C) = 0

GENERAL TOLERANCES: (UNLESS SPECIFIED)

	mm	INCH
4 PLACES	±0.	±.
3 PLACES	±0.	±.
2 PLACES	±0.30	±.
1 PLACE	±0.30	±.
ANGULAR: ± 3.0°		

DRAFT WHERE APPLICABLE MUST REMAIN WITHIN DIMENSIONS

SCALE 4:1 | DESIGN UNITS ☒mm ☐INCH | THIRD ANGLE PROJECTION | DIMENSIONS: ☐ mm/INCH ☐ INCH/mm ☒ mm ONLY | SHT | REV | REVISE ON CAD ONLY

DRAWN BY & DATE: W.Y.YANG 97/10/30

CHECKED BY & DATE: B.K.CHOI 97/10/30

APPROVED BY & DATE: C.W.LEE 97/10/30

CAD FILENAME: S35544AA.DGN

TITLE: .110 HOUSING-4P (FOR DOOR SWITCH)

MOLEX INCORPORATED

MATERIAL NO.: SEE TABLE | DRAWING NO.: SD-35544-001 | SHEET NO.: 1/1 | SIZE: B

THIS DRAWING CONTAINS INFORMATION THAT IS PROPRIETARY TO MOLEX INCORPORATED AND SHOULD NOT BE USED WITHOUT WRITTEN PERMISSION.

DWG. NO. SD-3554-001 | SIMILAR ITEM | PROJECT NO.

DO NOT SCALE DRAWING DIMENSION IN METRIC

MX-A3